CELL / MODEL NAME	DESCRIPTION	DATE
PD-1148-0	11 x 48 inch deck beam, no skew	1/28/2016
PD-1148-L	11 x 48 inch deck beam, ahead left	1/28/2016
PD-1148-R	11 x 48 inch deck beam, ahead right	1/28/2016
PD-1152-0	11 x 52 inch deck beam, no skew	6/1/2016
PD-1152-L	11 x 52 inch deck beam, ahead left	1/28/2016
PD-1152-R	11 x 52 inch deck beam, ahead right	6/1/2016
PD-1736-0	17 x 36 inch deck beam, no skew	6/1/2016
PD-1736-0D	17 x 36 inch deck beam details, no skew	1/28/2016
PD-1736-L	17 x 36 inch deck beam, ahead left	6/1/2016
PD-1736-LD	17 x 36 inch deck beam details, ahead left	6/1/2016
PD-1736-R	17 x 36 inch deck beam, ahead right	6/1/2016
PD-1736-RD	17 x 36 inch deck beam details, ahead right	6/1/2016
PD-1748-0	17 x 48 inch deck beam, no skew	6/1/2016
PD-1748-0D	17 x 48 inch deck beam details, no skew	1/28/2016
PD-1748-L	17 x 48 inch deck beam, ahead left	6/1/2016
PD-1748-LD	17 x 48 inch deck beam details, ahead left	6/1/2016
PD-1748-R	17 x 48 inch deck beam, ahead right	6/1/2016
PD-1748-RD	17 x 48 inch deck beam details, ahead right	6/1/2016
PD-2136-0	21 x 36 inch deck beam, no skew	6/1/2016
PD-2136-0D	21 x 36 inch deck beam details, no skew	1/28/2016
PD-2136-L	21 x 36 inch deck beam, ahead left	6/1/2016
PD-2136-LD	21 x 36 inch deck beam details, ahead left	1/28/2016
PD-2136-R	21 x 36 inch deck beam, ahead right	6/1/2016
PD-2136-RD	21 x 36 inch deck beam details, ahead right	1/28/2016
PD-2148-0	21 x 48 inch deck beam, no skew	6/1/2016
PD-2148-0D	21 x 48 inch deck beam details, no skew	1/28/2016
PD-2148-L	21 x 48 inch deck beam, ahead left	6/1/2016
PD-2148-LD	21 x 48 inch deck beam details, ahead left	1/28/2016
PD-2148-R	21 x 48 inch deck beam, ahead right	6/1/2016
PD-2148-RD	21 x 48 inch deck beam details, ahead right	6/1/2016
PD-2736-0	27 x 36 inch deck beam, no skew	6/1/2016
PD-2736-0D	27 x 36 inch deck beam details, no skew	6/1/2016
PD-2736-L	27 x 36 inch deck beam, ahead left	6/1/2016

CELL / MODEL NAME	DESCRIPTION	DATE
PD-2736-LD	27 x 36 inch deck beam details, ahead left	6/1/2016
PD-2736-R	27 x 36 inch deck beam, ahead right	6/1/2016
PD-2736-RD	27 x 36 inch deck beam details, ahead right	6/1/2016
PD-2748-0	27 x 48 inch deck beam, no skew	6/1/2016
PD-2748-0D	27 x 48 inch deck beam details, no skew	6/1/2016
PD-2748-L	27 x 48 inch deck beam, ahead left	6/1/2016
PD-2748-LD	27 x 48 inch deck beam details, ahead left	6/1/2016
PD-2748-R	27 x 48 inch deck beam, ahead right	6/1/2016
PD-2748-RD	27 x 48 inch deck beam details, ahead right	6/1/2016
PD-3336-0	33 x 36 inch deck beam, no skew	6/8/2015
PD-3336-0D	33 x 36 inch deck beam details, no skew	1/28/2016
PD-3336-L	33 x 36 inch deck beam, ahead left	6/8/2015
PD-3336-LD	33 x 36 inch deck beam details, ahead left	1/28/2016
PD-3336-R	33 x 36 inch deck beam, ahead right	6/8/2015
PD-3336-RD	33 x 36 inch deck beam details, ahead right	1/28/2016
PD-3348-0	33 x 48 inch deck beam, no skew	6/8/2015
PD-3348-0D	33 x 48 inch deck beam details, no skew	1/28/2016
PD-3348-L	33 x 48 inch deck beam, ahead left	6/8/2015
PD-3348-LD	33 x 48 inch deck beam details, ahead left	1/28/2016
PD-3348-R	33 x 48 inch deck beam, ahead right	6/8/2015
PD-3348-RD	33 x 48 inch deck beam details, ahead right	1/28/2016
PD-4236-0	42 x 36 inch deck beam, no skew	6/8/2015
PD-4236-0D	42 x 36 inch deck beam details, no skew	1/28/2016
PD-4236-L	42 x 36 inch deck beam, ahead left	6/8/2015
PD-4236-LD	42 x 36 inch deck beam details, ahead left	1/28/2016
PD-4236-R	42 x 36 inch deck beam, ahead right	6/8/2015
PD-4236-RD	42 x 36 inch deck beam details, ahead right	1/28/2016
PD-4248-0	42 x 48 inch deck beam, no skew	6/8/2015
PD-4248-0D	42 x 48 inch deck beam details, no skew	1/28/2016
PD-4248-L	42 x 48 inch deck beam, ahead left	6/8/2015
PD-4248-LD	42 x 48 inch deck beam details, ahead left	1/28/2016
PD-4248-R	42 x 48 inch deck beam, ahead right	6/8/2015
PD-4248-RD	42 x 48 inch deck beam details, ahead right	1/28/2016

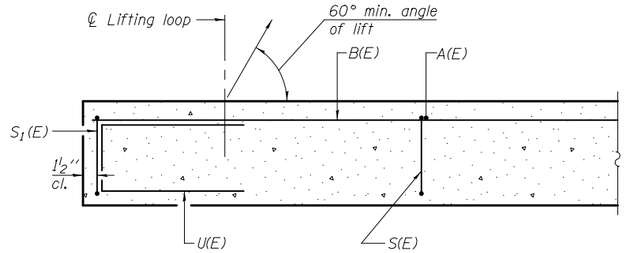

SECTION A-A

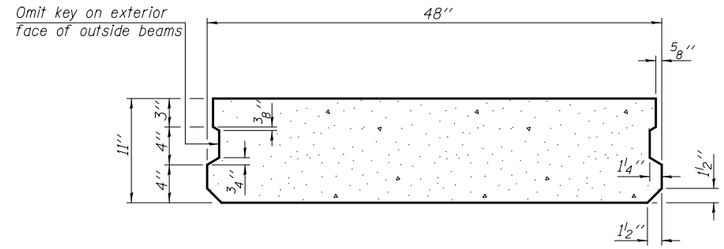

SECTION B-B
(Showing dimensions)

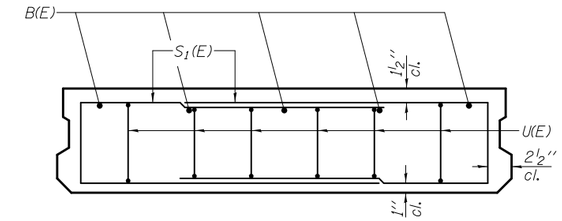

VIEW C-C

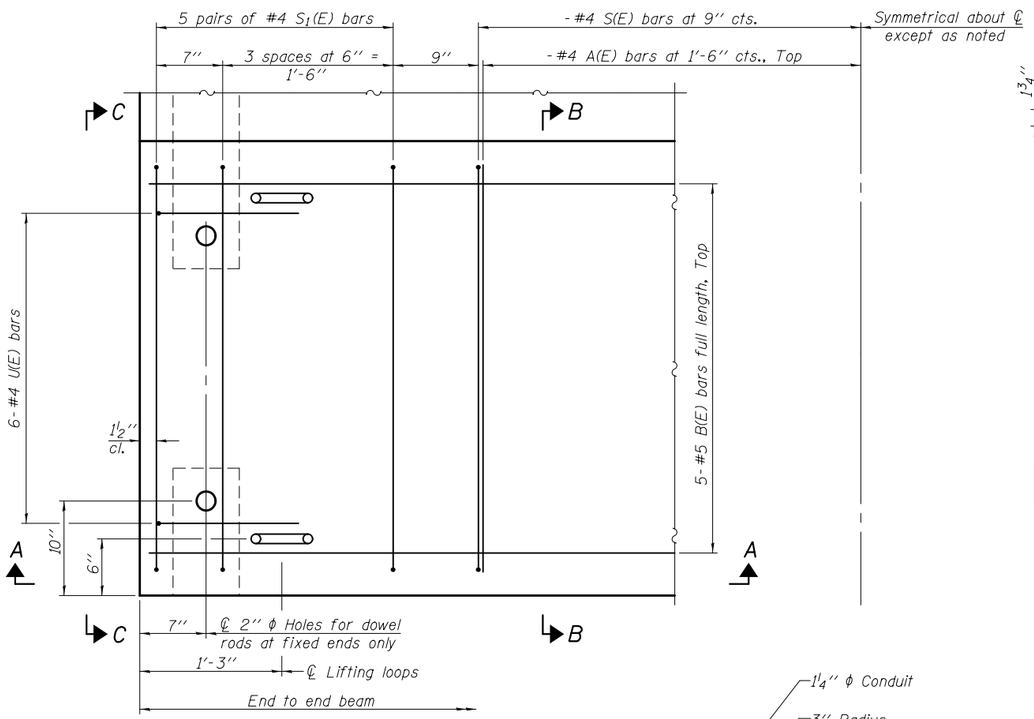

PLAN VIEW

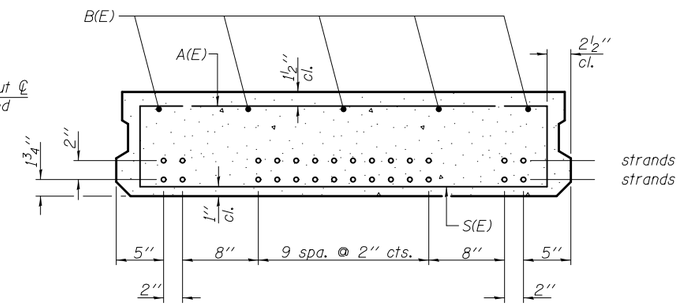

SECTION B-B
(Showing reinforcement and permissible strand locations)

Note: Place the number of strands specified in each row symmetrically about the centerline of beam in the permissible strand locations shown.

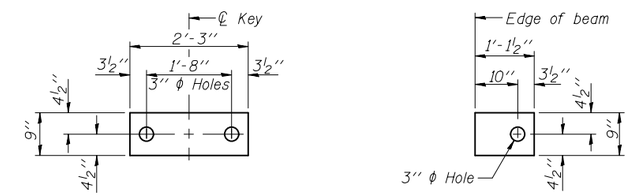

FABRIC BEARING PAD
(Interior)

FABRIC BEARING PAD
(Exterior)

FIXED

Notes:
All bearing pads shall be 1″ thick.
Omit holes when using expansion bearings.
Expansion bearing pad shall be bonded to the substructure.

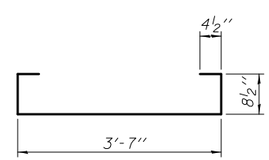

BAR S(E)

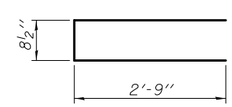

BAR S1(E)

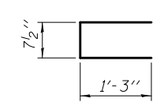

BAR U(E)

BAR LIST
ONE BEAM ONLY
(For information only)

Bar	No.	Size	Length	Shape
A(E)		#4	3′-7″	—
B(E)	5	#5		—
S(E)		#4	5′-9″	⊔
S1(E)	20	#4	6′-3″	⊏
U(E)	12	#4	3′-2″	⊏

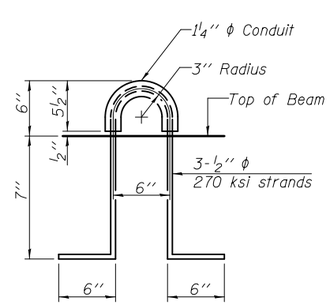

LIFTING LOOP DETAIL

NOTES

Prestressing steel shall be uncoated high strength, low relaxation 7-wire strand, Grade 270. The nominal diameter shall be ½″ and the nominal cross-sectional area shall be 0.153 sq. in.

Two ⅛″ fabric adjusting shims of the dimensions of the exterior bearing pad shall be provided for each bearing pad location.

A minimum 2½″ ϕ lifting pin shall be used to engage the lifting loops during handling.

Corrosion Inhibitor, per Article 1020.05(b)(10) and 1021.07 of the Standard Specifications, shall be used in the concrete for precast prestressed concrete deck beams.

Compressive strength of prestressed concrete, f′c, shall be 6000 psi.

Compressive strength of prestressed concrete at release, f′ci, shall be 5000 psi.

BILL OF MATERIAL

Precast Prestressed Conc. Deck Bms. (11″ depth)	Sq. Ft.	

PD-1148-0 1-28-16

FILE NAME =	USER NAME =	DESIGNED -	REVISED -	STATE OF ILLINOIS DEPARTMENT OF TRANSPORTATION	11″ x 48″ PPC DECK BEAM STRUCTURE NO.	F.A. RTE.	SECTION	COUNTY	TOTAL SHEETS	SHEET NO.
		CHECKED -	REVISED -							
	PLOT SCALE =	DRAWN -	REVISED -					CONTRACT NO.		
	PLOT DATE =	CHECKED -	REVISED -				ILLINOIS	FED. AID PROJECT		

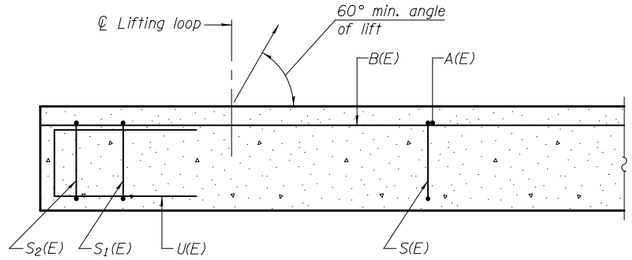

SECTION A-A

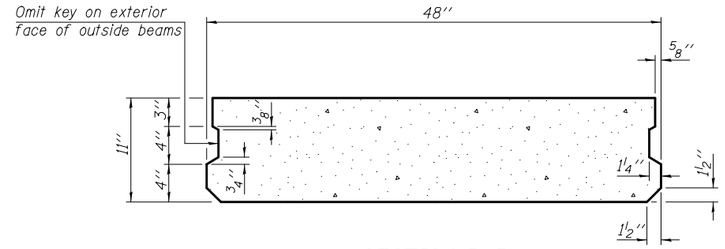

SECTION B-B
(Showing dimensions)

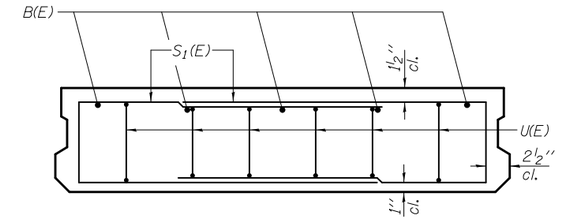

VIEW C-C

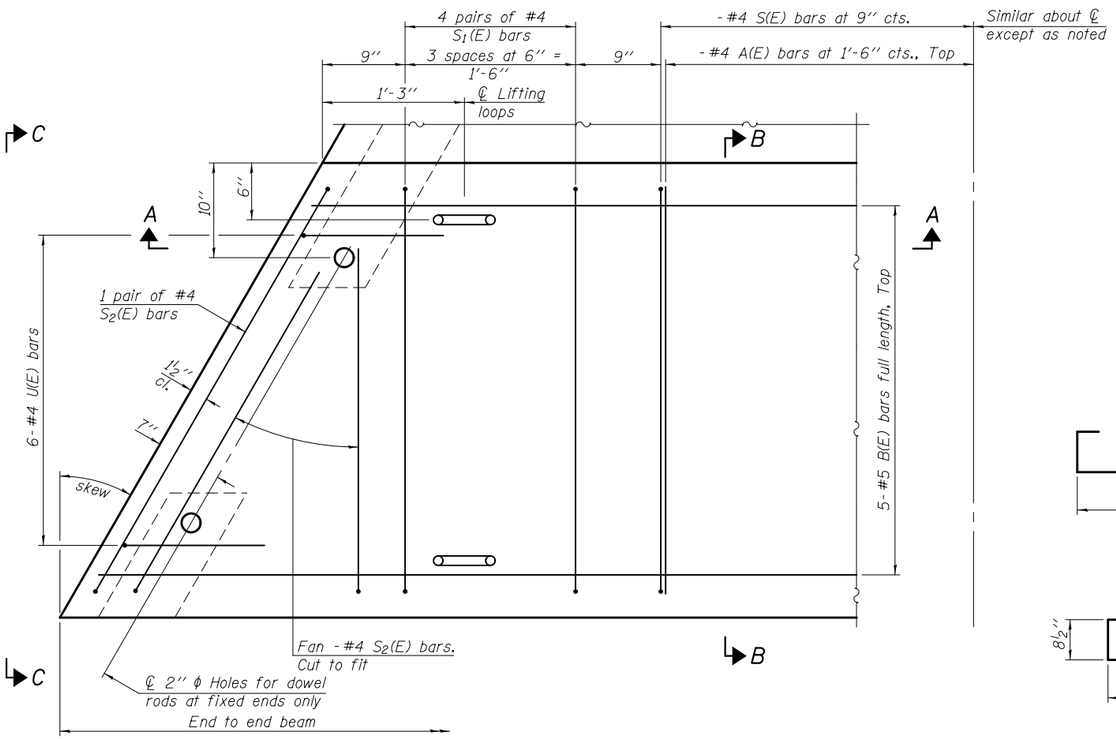

PLAN VIEW

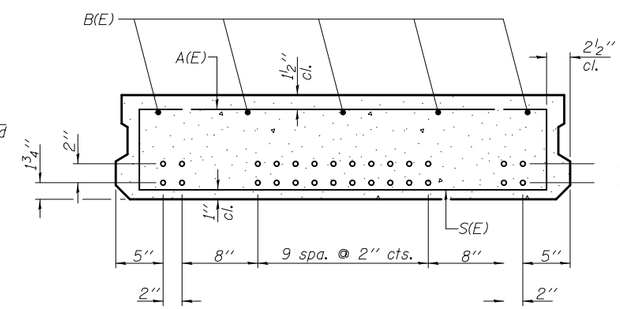

SECTION B-B
(Showing reinforcement and permissible strand locations)

Note: Place the number of strands specified in each row symmetrically about the centerline of beam in the permissible strand locations shown.

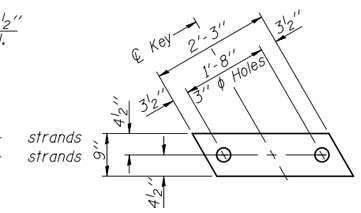

FABRIC BEARING PAD
(Interior)

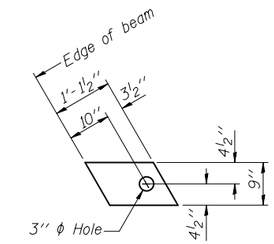

FABRIC BEARING PAD
(Exterior)

FIXED

Notes:
All bearing pads shall be 1″ thick.
Omit holes when using expansion bearings.
Expansion bearing pad shall be bonded to the substructure.

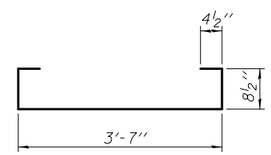

BAR S(E)

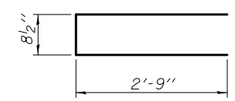

BAR S1(E)

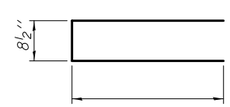

BAR S2(E)

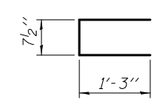

BAR U(E)

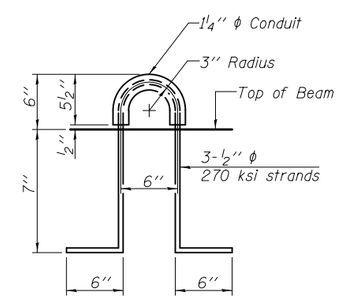

LIFTING LOOP DETAIL

BAR LIST
ONE BEAM ONLY
(For information only)

Bar	No.	Size	Length	Shape
A(E)		#4	3′-7″	—
B(E)	5	#5		—
S(E)		#4	5′-9″	⊔
S1(E)	16	#4	6′-3″	⊏⊐
S2(E)		#4		⊏⊐
U(E)	12	#4	3′-2″	⊏

BILL OF MATERIAL

Precast Prestressed Conc. Deck Bms. (11″ depth)	Sq. Ft.	

NOTES

Prestressing steel shall be uncoated high strength, low relaxation 7-wire strand, Grade 270. The nominal diameter shall be ½″ and the nominal cross-sectional area shall be 0.153 sq. in.

Two ⅛″ fabric adjusting shims of the dimensions of the exterior bearing pad shall be provided for each bearing pad location.

A minimum 2½″ ϕ lifting pin shall be used to engage the lifting loops during handling.

Corrosion Inhibitor, per Article 1020.05(b)(10) and 1021.07 of the Standard Specifications, shall be used in the concrete for precast prestressed concrete deck beams.

Compressive strength of prestressed concrete, f′c, shall be 6000 psi.

Compressive strength of prestressed concrete at release, f′ci, shall be 5000 psi.

PD-1148-L 1-28-16

FILE NAME =	USER NAME =	DESIGNED -	REVISED -	STATE OF ILLINOIS DEPARTMENT OF TRANSPORTATION	11″ x 48″ PPC DECK BEAM STRUCTURE NO.	F.A. RTE.	SECTION	COUNTY	TOTAL SHEETS	SHEET NO.
		CHECKED -	REVISED -							
	PLOT SCALE =	DRAWN -	REVISED -			CONTRACT NO.				
	PLOT DATE =	CHECKED -	REVISED -			ILLINOIS FED. AID PROJECT				

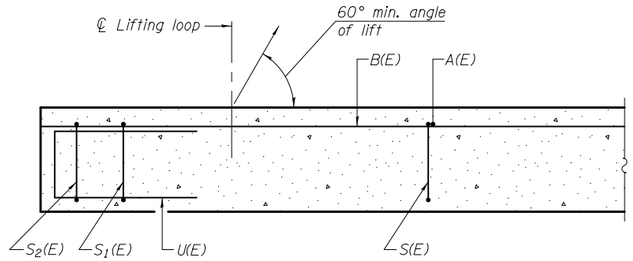

SECTION A-A

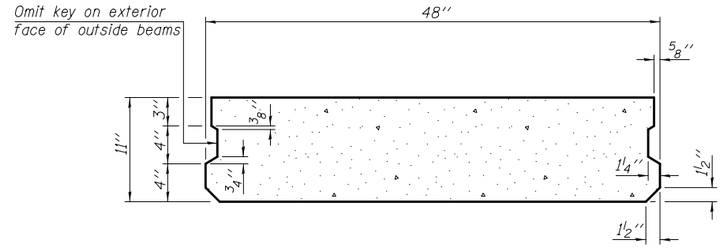

SECTION B-B

(Showing dimensions)

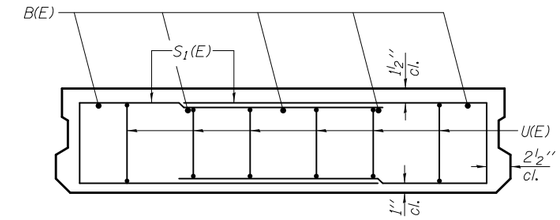

VIEW C-C

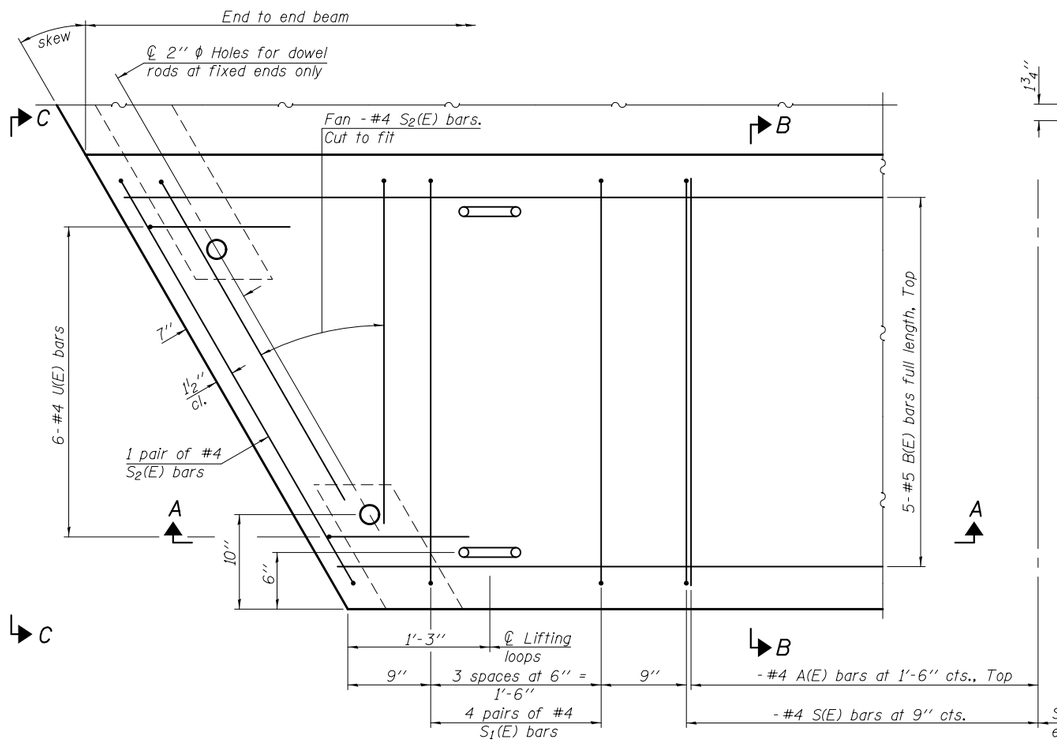

PLAN VIEW

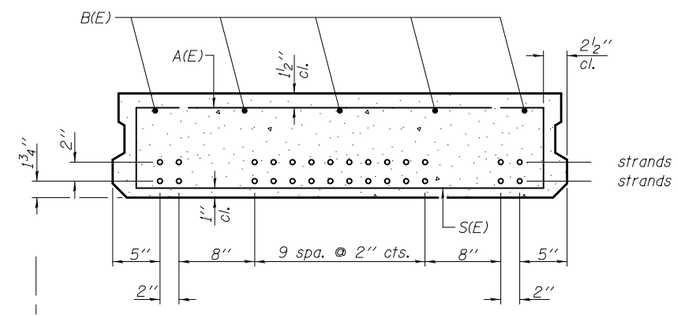

SECTION B-B

(Showing reinforcement and permissible strand locations)

Note: Place the number of strands specified in each row symmetrically about the centerline of beam in the permissible strand locations shown.

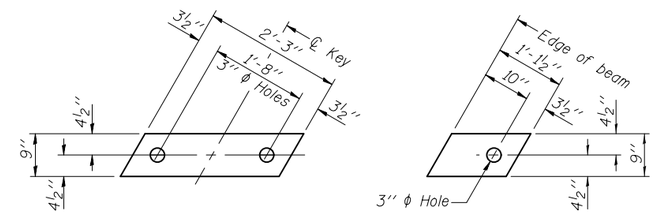

FABRIC BEARING PAD

(Interior)

FABRIC BEARING PAD

(Exterior)

FIXED

Notes:
All bearing pads shall be 1" thick.
Omit holes when using expansion bearings.
Expansion bearing pad shall be bonded to the substructure.

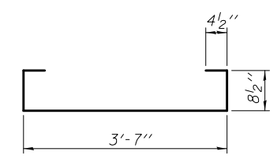

BAR S(E)

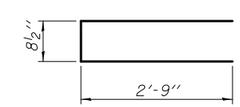

BAR $S_1(E)$

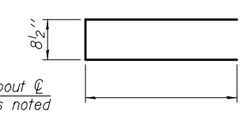

BAR $S_2(E)$

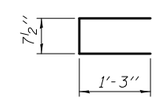

BAR U(E)

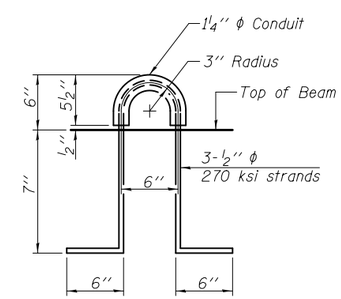

LIFTING LOOP DETAIL

BAR LIST
ONE BEAM ONLY

(For information only)

Bar	No.	Size	Length	Shape
A(E)		#4	3'-7"	—
B(E)	5	#5		—
S(E)		#4	5'-9"	⊔
$S_1(E)$	16	#4	6'-3"	⊏⊐
$S_2(E)$		#4		⊏⊐
U(E)	12	#4	3'-2"	⊏

BILL OF MATERIAL

Precast Prestressed Conc. Deck Bms. (11" depth)	Sq. Ft.	

NOTES

Prestressing steel shall be uncoated high strength, low relaxation 7-wire strand, Grade 270. The nominal diameter shall be ½" and the nominal cross-sectional area shall be 0.153 sq. in.

Two ⅛" fabric adjusting shims of the dimensions of the exterior bearing pad shall be provided for each bearing pad location.

A minimum 2½" ϕ lifting pin shall be used to engage the lifting loops during handling.

Corrosion Inhibitor, per Article 1020.05(b)(10) and 1021.07 of the Standard Specifications, shall be used in the concrete for precast prestressed concrete deck beams.

Compressive strength of prestressed concrete, f'c, shall be 6000 psi.

Compressive strength of prestressed concrete at release, f'ci, shall be 5000 psi.

PD-1148-R 1-28-16

FILE NAME =	USER NAME =	DESIGNED -	REVISED -
		CHECKED -	REVISED -
	PLOT SCALE =	DRAWN -	REVISED -
	PLOT DATE =	CHECKED -	REVISED -

STATE OF ILLINOIS
DEPARTMENT OF TRANSPORTATION

11" x 48" PPC DECK BEAM
STRUCTURE NO.

F.A. RTE.	SECTION	COUNTY	TOTAL SHEETS	SHEET NO.

CONTRACT NO.

ILLINOIS FED. AID PROJECT

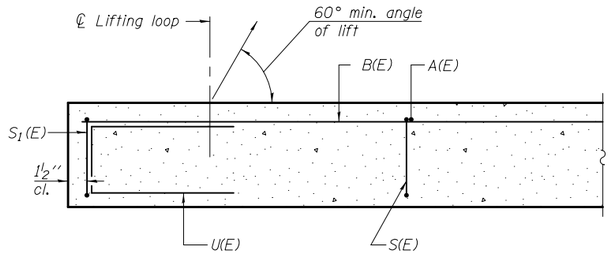

SECTION A-A

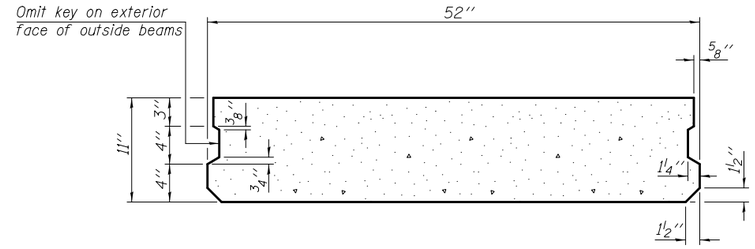

SECTION B-B

(Showing dimensions)

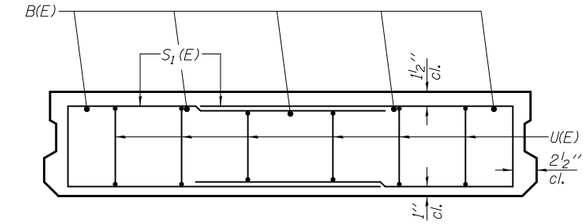

VIEW C-C

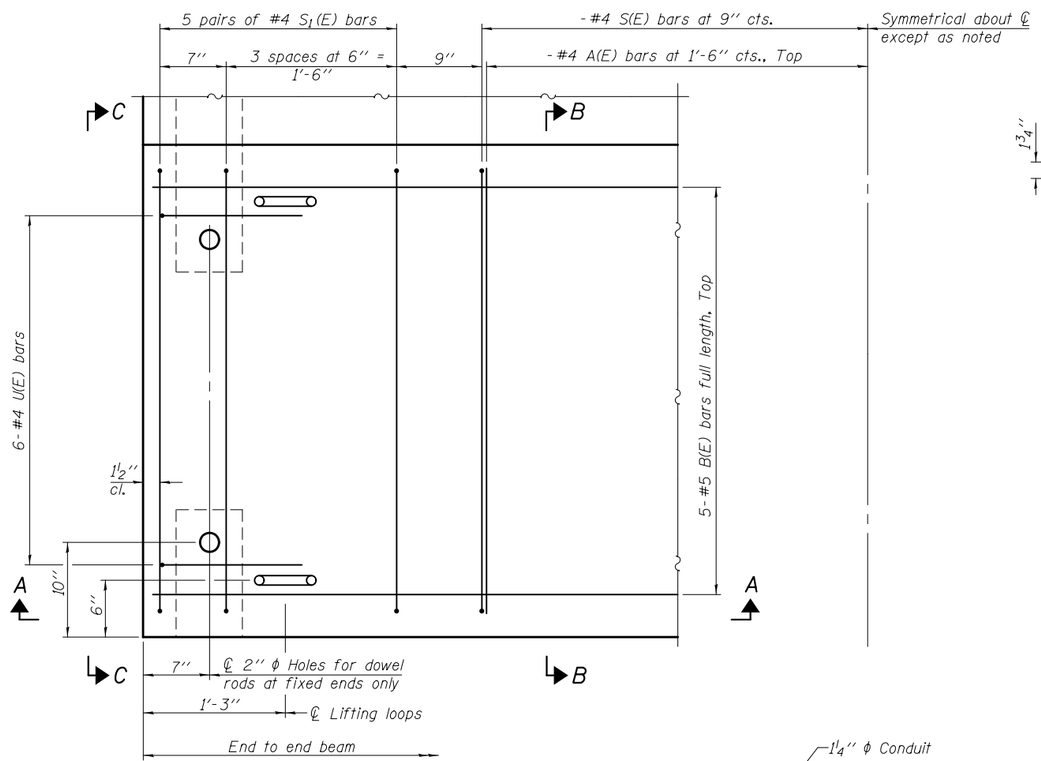

PLAN VIEW

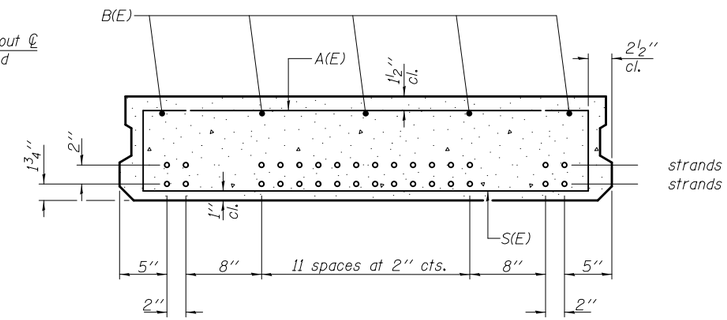

SECTION B-B

(Showing reinforcement and permissible strand locations)

Note: Place the number of strands specified in each row symmetrically about the centerline of beam in the permissible strand locations shown.

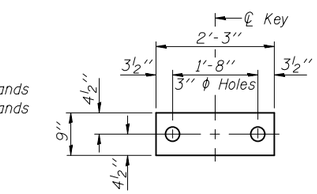

FABRIC BEARING PAD

(Interior)

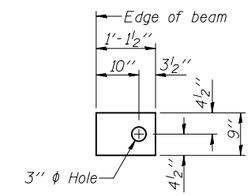

FABRIC BEARING PAD

(Exterior)

FIXED

Notes:
All bearing pads shall be 1″ thick.
Omit holes when using expansion bearings.
Expansion bearing pad shall be bonded to the substructure.

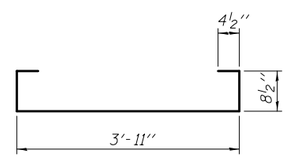

BAR S(E)

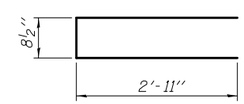

BAR S1(E)

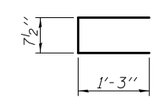

BAR U(E)

BAR LIST
ONE BEAM ONLY

(For information only)

Bar	No.	Size	Length	Shape
A(E)		#4	3′-11″	—
B(E)	5	#5		—
S(E)		#4	6′-1″	⊔
S1(E)	20	#4	6′-7″	⊏
U(E)	12	#4	3′-2″	⊏

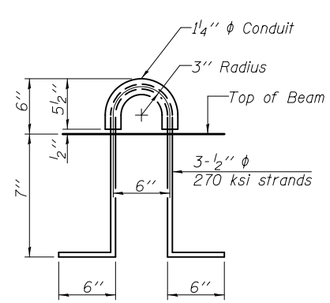

LIFTING LOOP DETAIL

NOTES

Prestressing steel shall be uncoated high strength, low relaxation 7-wire strand, Grade 270. The nominal diameter shall be ½″ and the nominal cross-sectional area shall be 0.153 sq. in.

Two ⅛″ fabric adjusting shims of the dimensions of the exterior bearing pad shall be provided for each bearing pad location.

A minimum 2½″ ϕ lifting pin shall be used to engage the lifting loops during handling.

Corrosion Inhibitor, per Article 1020.05(b)(10) and 1021.07 of the Standard Specifications, shall be used in the concrete for precast prestressed concrete deck beams.

Compressive strength of prestressed concrete, f′c, shall be 6000 psi.

Compressive strength of prestressed concrete at release, f′ci, shall be 5000 psi.

BILL OF MATERIAL

Precast Prestressed Conc. Deck Bms. (11″ depth)	Sq. Ft.	

PD-1152-0 06-01-16

FILE NAME =	USER NAME =	DESIGNED -	REVISED -
		CHECKED -	REVISED -
	PLOT SCALE =	DRAWN -	REVISED -
	PLOT DATE =	CHECKED -	REVISED -

STATE OF ILLINOIS
DEPARTMENT OF TRANSPORTATION

11″ x 52″ PPC DECK BEAM
STRUCTURE NO.

F.A. RTE.	SECTION	COUNTY	TOTAL SHEETS	SHEET NO.

CONTRACT NO.

ILLINOIS FED. AID PROJECT

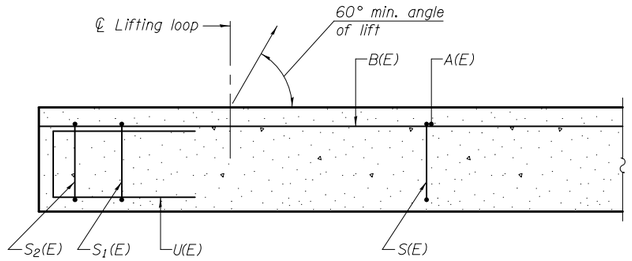

SECTION A-A

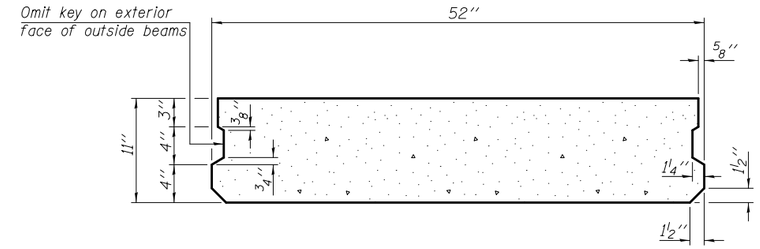

SECTION B-B
(Showing dimensions)

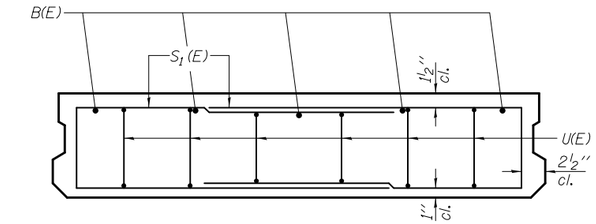

VIEW C-C

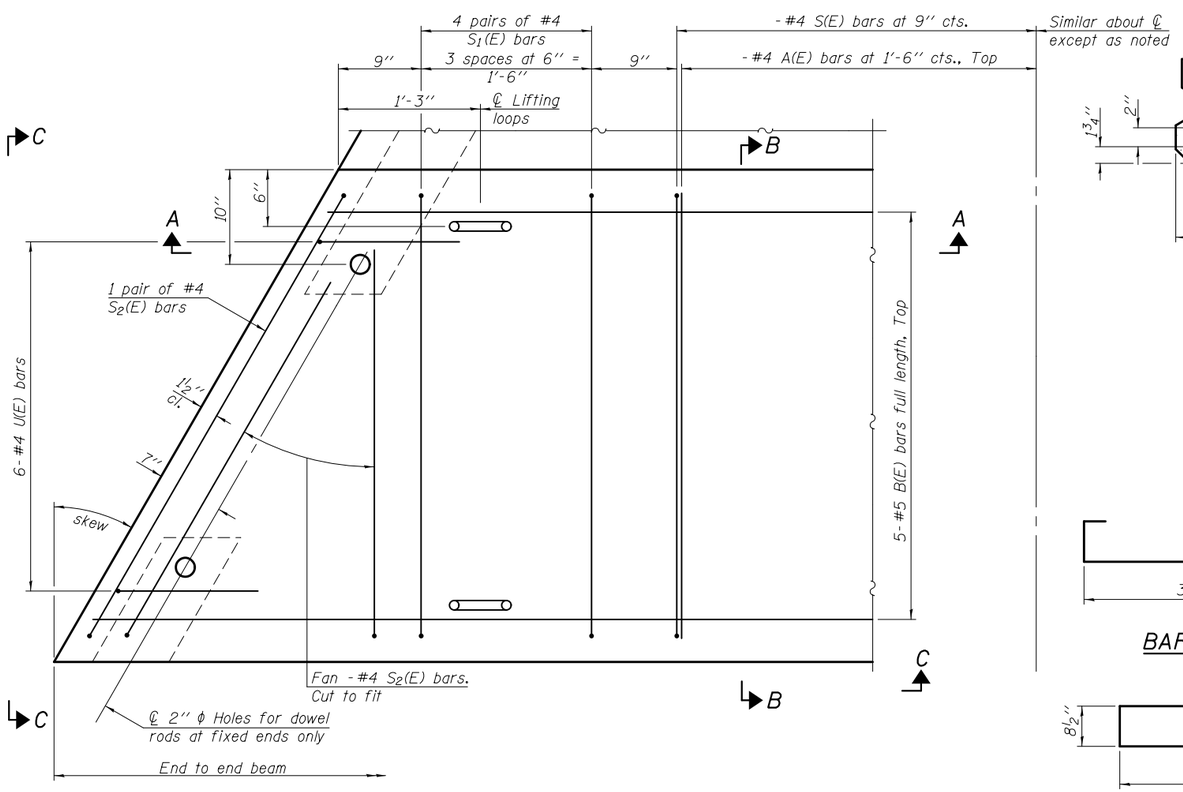

PLAN VIEW

Similar about ℄ except as noted

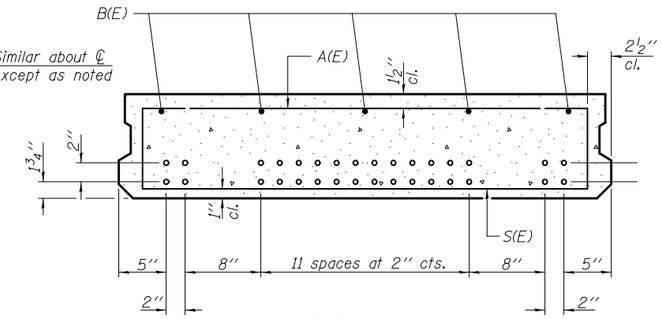

SECTION B-B
(Showing reinforcement and permissible strand locations)

Note: Place the number of strands specified in each row symmetrically about the centerline of beam in the permissible strand locations shown.

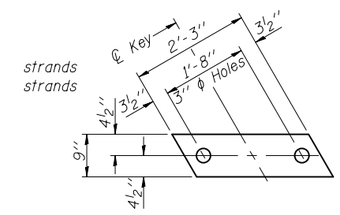

FABRIC BEARING PAD
(Interior)

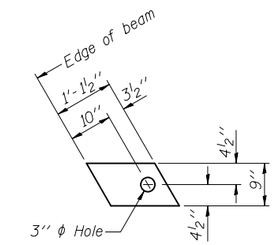

FABRIC BEARING PAD
(Exterior)

FIXED

Notes:
All bearing pads shall be 1" thick.
Omit holes when using expansion bearings.
Expansion bearing pad shall be bonded to the substructure.

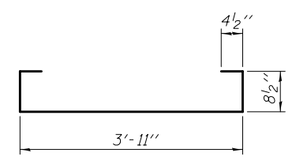

BAR S(E)

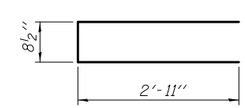

BAR S_1(E)

BAR S_2(E)

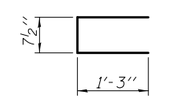

BAR U(E)

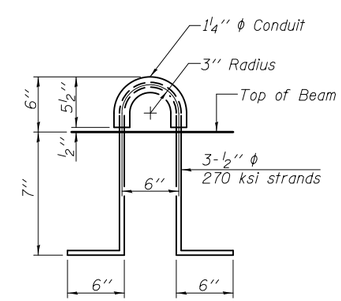

LIFTING LOOP DETAIL

BAR LIST
ONE BEAM ONLY
(For information only)

Bar	No.	Size	Length	Shape
A(E)		#4	3'-11"	—
B(E)	5	#5		—
S(E)		#4	6'-1"	⊔
S_1(E)	16	#4	6'-7"	⊏⊐
S_2(E)		#4		⊏⊐
U(E)	12	#4	3'-2"	⊏

BILL OF MATERIAL

Precast Prestressed Conc. Deck Bms. (11" depth)	Sq. Ft.	

NOTES

Prestressing steel shall be uncoated high strength, low relaxation 7-wire strand, Grade 270. The nominal diameter shall be 1/2" and the nominal cross-sectional area shall be 0.153 sq. in.

Two 1/8" fabric adjusting shims of the dimensions of the exterior bearing pad shall be provided for each bearing pad location.

A minimum 2 1/2" ϕ lifting pin shall be used to engage the lifting loops during handling.

Corrosion Inhibitor, per Article 1020.05(b)(10) and 1021.07 of the Standard Specifications, shall be used in the concrete for precast prestressed concrete deck beams.

Compressive strength of prestressed concrete, f'c, shall be 6000 psi.

Compressive strength of prestressed concrete at release, f'ci, shall be 5000 psi.

PD-1152-L 1-28-16

FILE NAME =	USER NAME =	DESIGNED -	REVISED -
		CHECKED -	REVISED -
	PLOT SCALE =	DRAWN -	REVISED -
	PLOT DATE =	CHECKED -	REVISED -

STATE OF ILLINOIS
DEPARTMENT OF TRANSPORTATION

11" x 52" PPC DECK BEAM
STRUCTURE NO.

F.A. RTE.	SECTION	COUNTY	TOTAL SHEETS	SHEET NO.

CONTRACT NO.

ILLINOIS FED. AID PROJECT

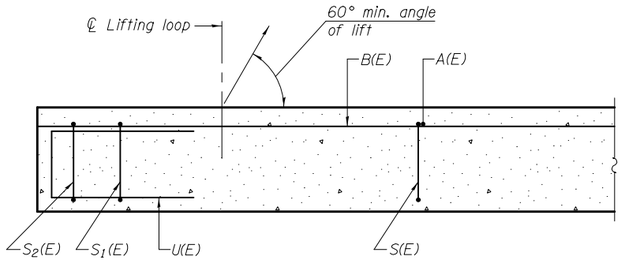

SECTION A-A

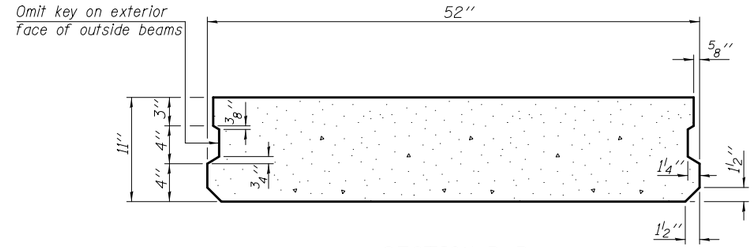

SECTION B-B
(Showing dimensions)

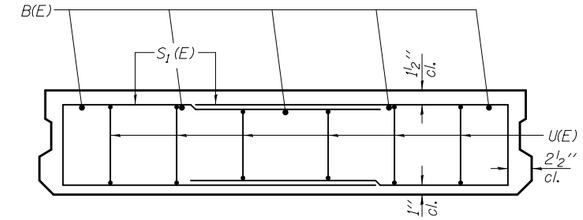

VIEW C-C

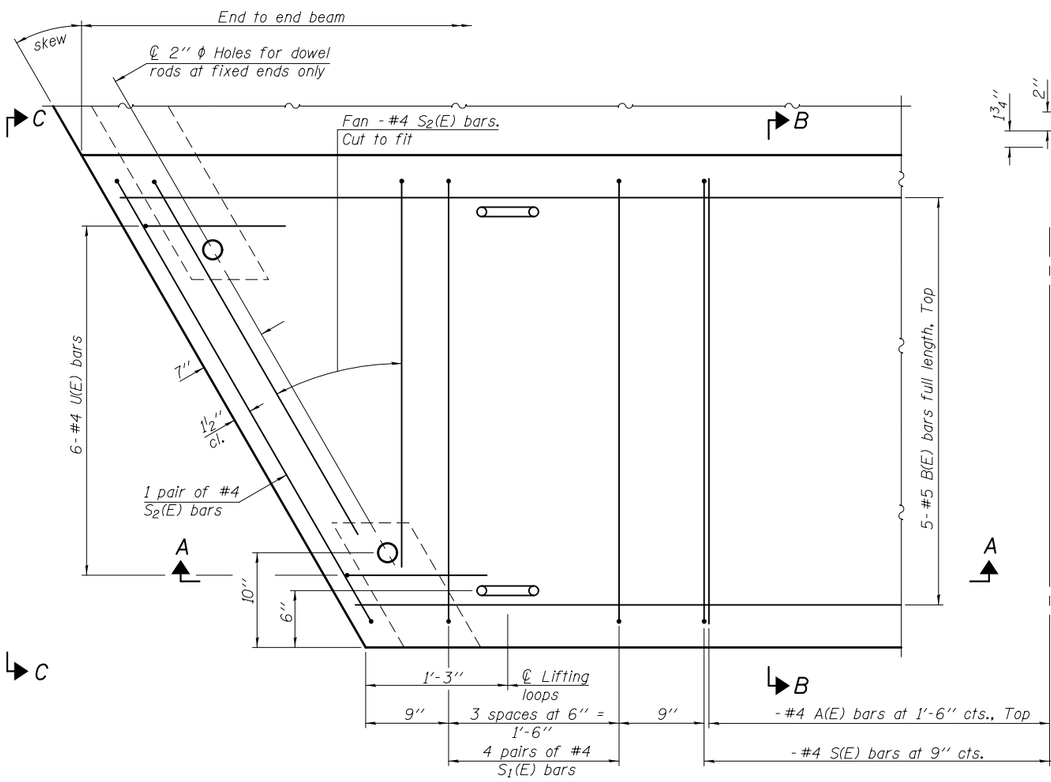

PLAN VIEW

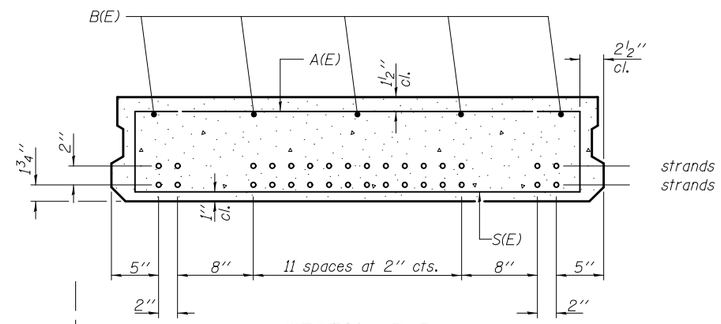

SECTION B-B
(Showing reinforcement and permissible strand locations)

Note: Place the number of strands specified in each row symmetrically about the centerline of beam in the permissible strand locations shown.

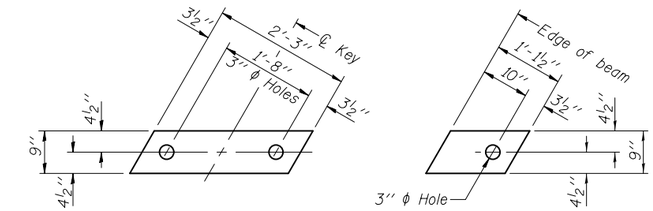

FABRIC BEARING PAD (Interior)
FABRIC BEARING PAD (Exterior)
FIXED

Notes:
All bearing pads shall be 1″ thick.
Omit holes when using expansion bearings.
Expansion bearing pad shall be bonded to the substructure.

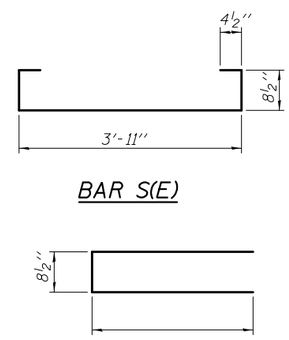

BAR S(E)
BAR S2(E)

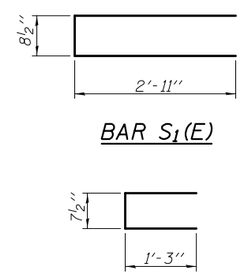

BAR S1(E)
BAR U(E)

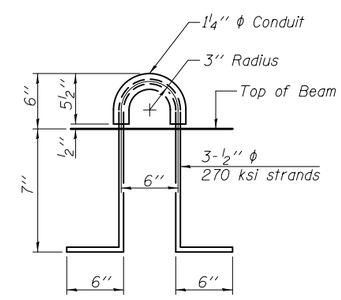

LIFTING LOOP DETAIL

BAR LIST
ONE BEAM ONLY
(For information only)

Bar	No.	Size	Length	Shape
A(E)		#4	3′-11″	—
B(E)	5	#5		—
S(E)		#4	6′-1″	⊔
S1(E)	16	#4	6′-7″	⊏
S2(E)		#4		⊏
U(E)	12	#4	3′-2″	⊏

BILL OF MATERIAL

Precast Prestressed Conc. Deck Bms. (11″ depth)	Sq. Ft.	

NOTES

Prestressing steel shall be uncoated high strength, low relaxation 7-wire strand, Grade 270. The nominal diameter shall be ½″ and the nominal cross-sectional area shall be 0.153 sq. in.

Two ⅛″ fabric adjusting shims of the dimensions of the exterior bearing pad shall be provided for each bearing pad location.

A minimum 2½″ ϕ lifting pin shall be used to engage the lifting loops during handling.

Corrosion Inhibitor, per Article 1020.05(b)(10) and 1021.07 of the Standard Specifications, shall be used in the concrete for precast prestressed concrete deck beams.

Compressive strength of prestressed concrete, f′c, shall be 6000 psi.

Compressive strength of prestressed concrete at release, f′ci, shall be 5000 psi.

PD-1152-R 06-01-16

FILE NAME =	USER NAME =	DESIGNED -	REVISED -	STATE OF ILLINOIS DEPARTMENT OF TRANSPORTATION	11″ x 52″ PPC DECK BEAM STRUCTURE NO.	F.A. RTE.	SECTION	COUNTY	TOTAL SHEETS	SHEET NO.
		CHECKED -	REVISED -							
	PLOT SCALE =	DRAWN -	REVISED -					CONTRACT NO.		
	PLOT DATE =	CHECKED -	REVISED -				ILLINOIS	FED. AID PROJECT		

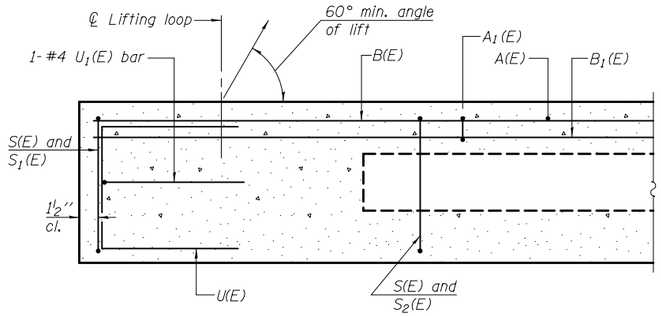

SECTION A-A

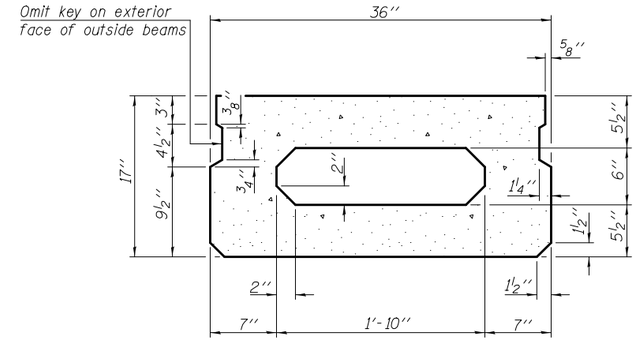

SECTION B-B

(Showing dimensions)

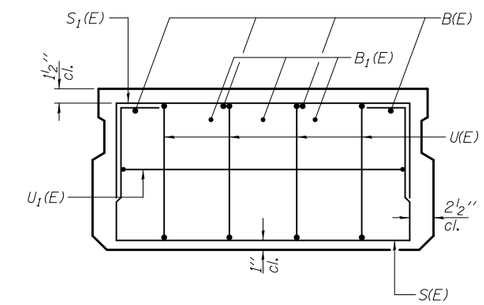

VIEW C-C

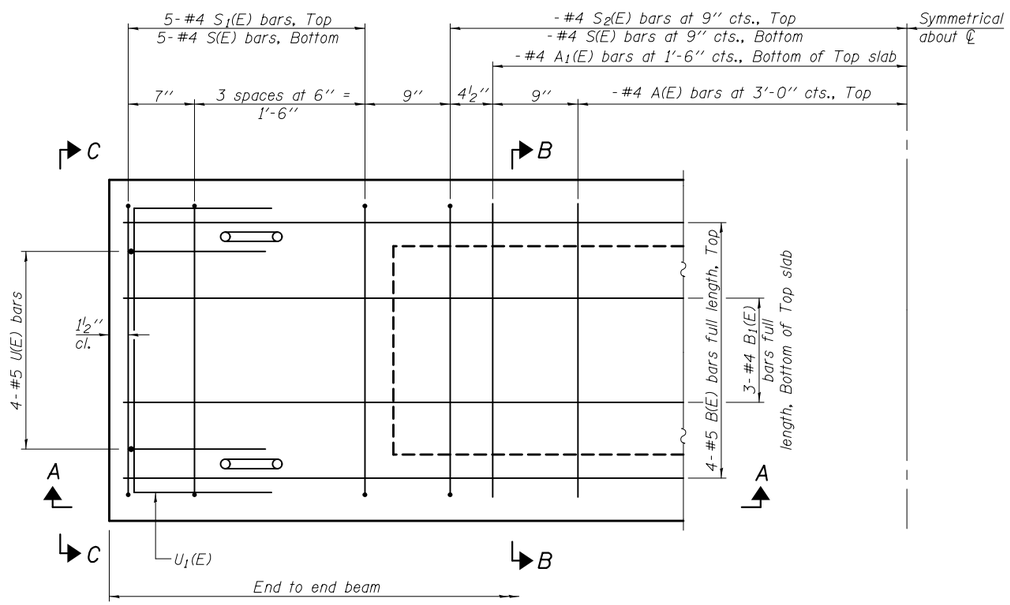

PLAN VIEW

Note: Spacing of S(E) and $S_2(E)$ bars may be adjusted up to 4'' in the immediate area of the transverse tie diaphragms to miss the block outs for the transverse ties.

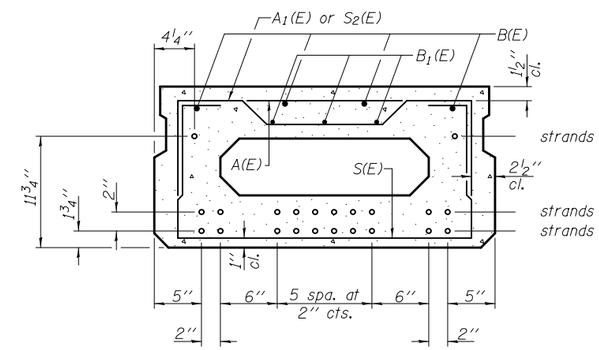

SECTION B-B

(Showing reinforcement and permissible strand locations)

Note: Place the number of strands specified in each row symmetrically about the centerline of beam in the permissible strand locations shown.

BAR LIST
ONE BEAM ONLY

(For information only)

Bar	No.	Size	Length	Shape
A(E)		#4	2'-7''	—
$A_1(E)$		#4	2'-10''	⌣
B(E)		#5		—
$B_1(E)$		#4		—
S(E)		#4	5'-9''	⊔
$S_1(E)$	10	#4	4'-3''	⊓
$S_2(E)$		#4	4'-6''	⊓
U(E)	8	#5	3'-8''	⊏
$U_1(E)$	2	#4	5'-0''	⊓

Note: See sheet of for additional details and Bill of Material.

MINIMUM BAR LAP

#4 bar = 1'-11''
#5 bar = 2'-6''

PD-1736-0 06-01-16

FILE NAME =	USER NAME =	DESIGNED -	REVISED -
		CHECKED -	REVISED -
	PLOT SCALE =	DRAWN -	REVISED -
	PLOT DATE =	CHECKED -	REVISED -

STATE OF ILLINOIS
DEPARTMENT OF TRANSPORTATION

17'' x 36'' PPC DECK BEAM
STRUCTURE NO.

F.A. RTE.	SECTION	COUNTY	TOTAL SHEETS	SHEET NO.

CONTRACT NO.

ILLINOIS FED. AID PROJECT

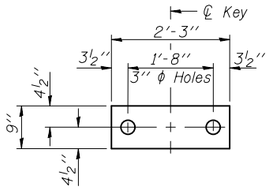

FABRIC BEARING PAD
(Interior)

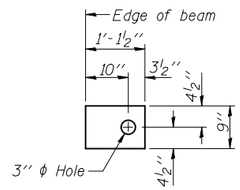

FABRIC BEARING PAD
(Exterior)

FIXED

Notes:
All bearing pads shall be 1" thick.
Omit holes when using expansion bearings.
Expansion bearing pad shall be bonded to the substructure.

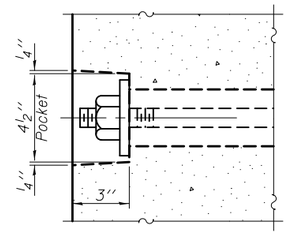

SECTION A-A

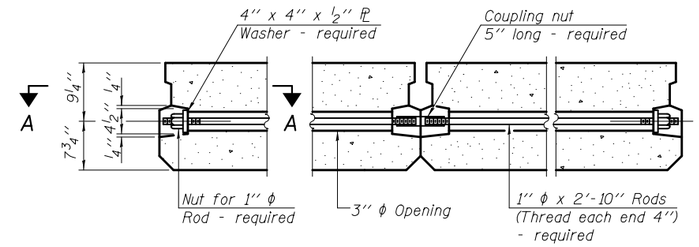

TYPICAL TRANSVERSE TIE ASSEMBLY

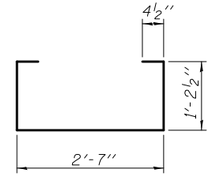

BAR S(E)

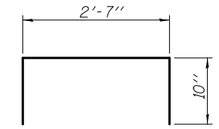

BAR S1(E)

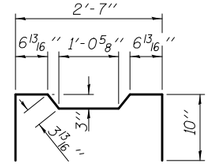

BAR S2(E)

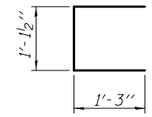

BAR U(E)

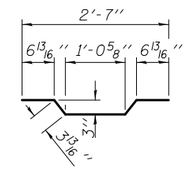

BAR A1(E)

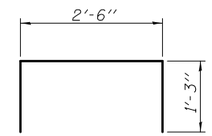

BAR U1(E)

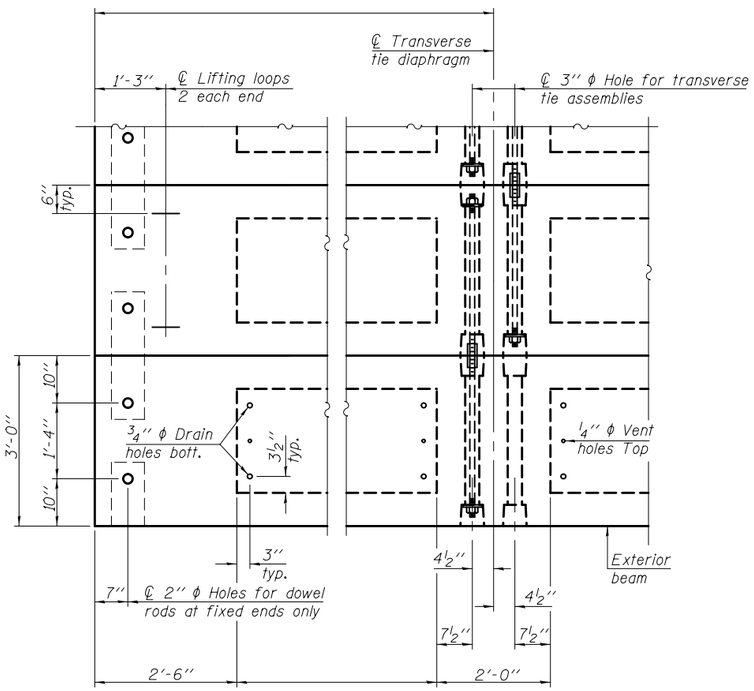

PLAN VIEW

Note: Connect beams in pairs with the transverse tie configuration shown.

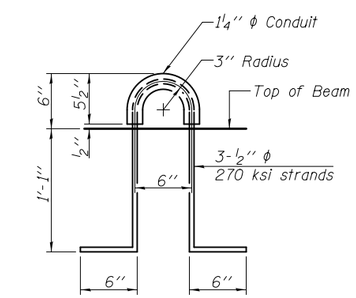

LIFTING LOOP DETAIL

NOTES

Prestressing steel shall be uncoated high strength, low relaxation 7-wire strand, Grade 270. The nominal diameter shall be ½" and the nominal cross-sectional area shall be 0.153 sq. in.

The 1" ϕ rods in the transverse tie assembly shall be tightened to a snug fit and the threads set. Pockets on exterior faces of bridge shall be filled with grout after transverse tie assembly is in place.

Two ⅛" fabric adjusting shims of the dimensions of the exterior bearing pad shall be provided for each bearing pad location.

A minimum 2½" ϕ lifting pin shall be used to engage the lifting loops during handling.

Corrosion Inhibitor, per Article 1020.05(b)(10) and 1021.07 of the Standard Specifications, shall be used in the concrete for precast prestressed concrete deck beams.

Compressive strength of prestressed concrete, f'c, shall be 6000 psi.

Compressive strength of prestressed concrete at release, f'ci, shall be 5000 psi.

BILL OF MATERIAL

Precast Prestressed Conc. Deck Bms. (17" depth)	Sq. Ft.	

PD-1736-0D 1-28-16

FILE NAME =	USER NAME =	DESIGNED -	REVISED -	STATE OF ILLINOIS DEPARTMENT OF TRANSPORTATION	17" x 36" PPC DECK BEAM DETAILS STRUCTURE NO.	F.A. RTE.	SECTION	COUNTY	TOTAL SHEETS / SHEET NO.
		CHECKED -	REVISED -						
	PLOT SCALE =	DRAWN -	REVISED -			CONTRACT NO.			
	PLOT DATE =	CHECKED -	REVISED -			ILLINOIS FED. AID PROJECT			

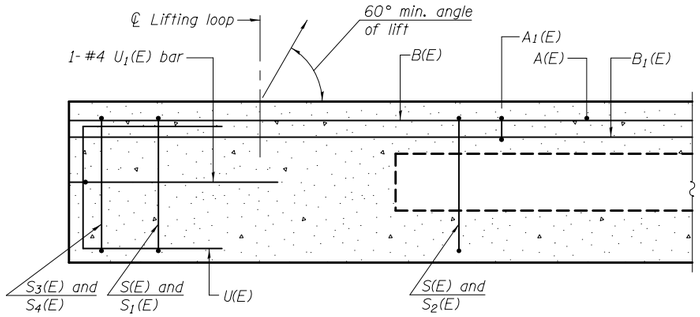

SECTION A-A

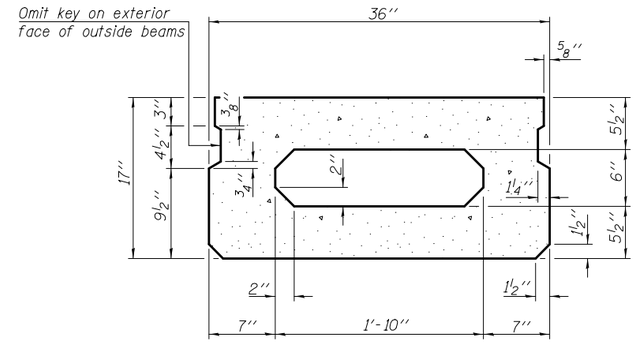

SECTION B-B

(Showing dimensions)

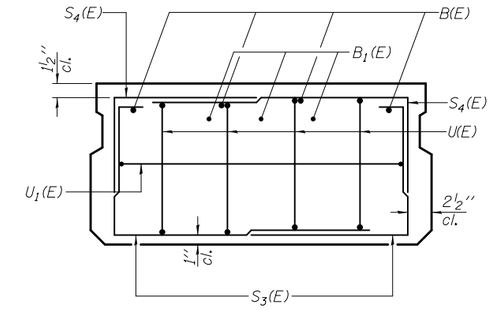

VIEW C-C

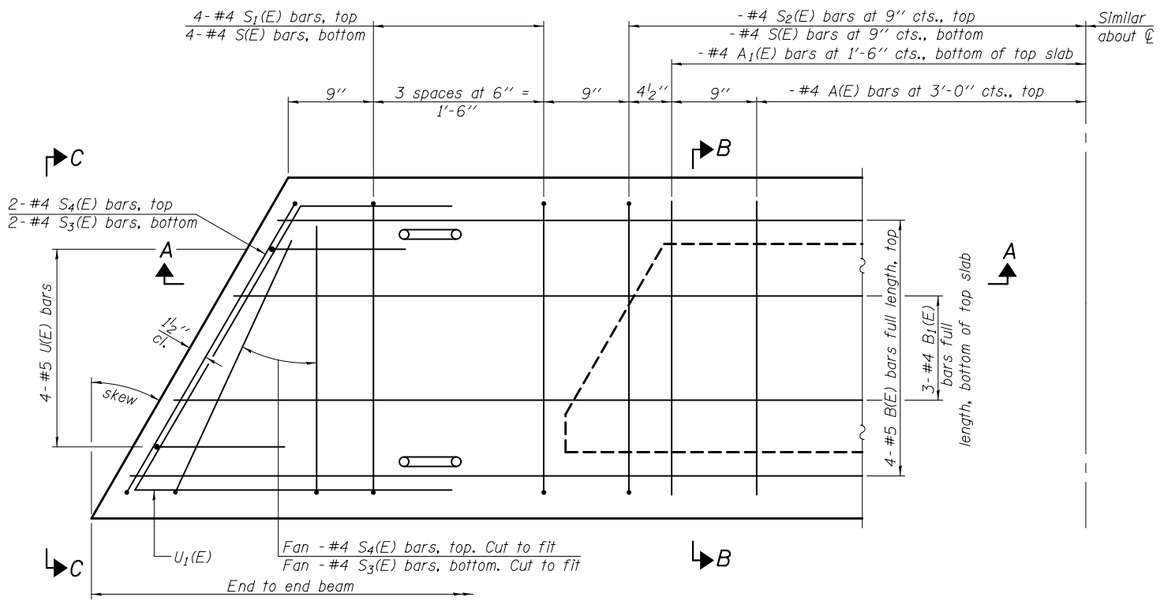

PLAN VIEW

Note: Spacing of S(E) and S_2(E) bars may be adjusted up to 4" in the immediate area of the transverse tie diaphragms to miss the block outs for the transverse ties.

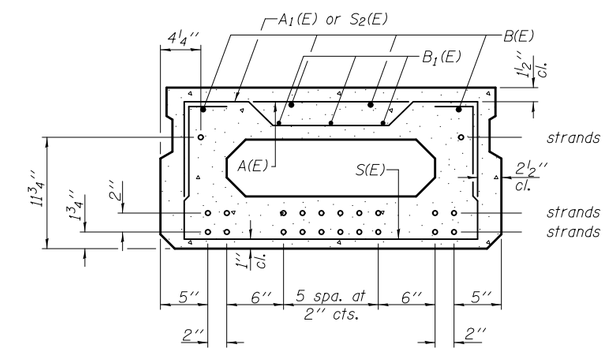

SECTION B-B

(Showing reinforcement and permissible strand locations)

Note: Place the number of strands specified in each row symmetrically about the centerline of beam in the permissible strand locations shown.

BAR LIST
ONE BEAM ONLY

(For information only)

Bar	No.	Size	Length	Shape
A(E)		#4	2'-7"	—
A_1(E)		#4	2'-10"	⌣
B(E)		#5		—
B_1(E)		#4		—
S(E)		#4	5'-9"	⊔
S_1(E)	8	#4	4'-3"	⊓
S_2(E)		#4	4'-6"	⊓
S_3(E)		#4		⊔
S_4(E)		#4		⊔
U(E)	8	#5	3'-8"	⊏
U_1(E)	2	#4		∠

Note: See sheet of for additional details and Bill of Material.

MINIMUM BAR LAP

#4 bar = 1'-11"
#5 bar = 2'-6"

PD-1736-L 06-01-16

FILE NAME =	USER NAME =	DESIGNED -	REVISED -	STATE OF ILLINOIS DEPARTMENT OF TRANSPORTATION	17" x 36" PPC DECK BEAM STRUCTURE NO.	F.A. RTE.	SECTION	COUNTY	TOTAL SHEETS / SHEET NO.
		CHECKED -	REVISED -						
	PLOT SCALE =	DRAWN -	REVISED -			CONTRACT NO.			
	PLOT DATE =	CHECKED -	REVISED -			ILLINOIS FED. AID PROJECT			

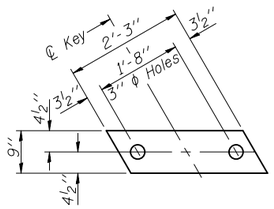

FABRIC BEARING PAD
(Interior)

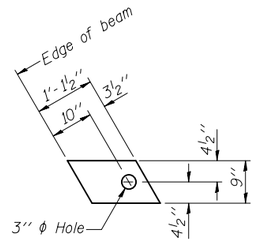

FABRIC BEARING PAD
(Exterior)

FIXED

Notes:
All bearing pads shall be 1" thick.
Omit holes when using expansion bearings.
Expansion bearing pad shall be bonded to the substructure.

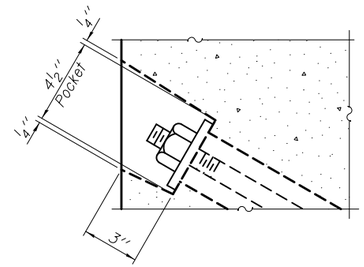

SECTION A-A

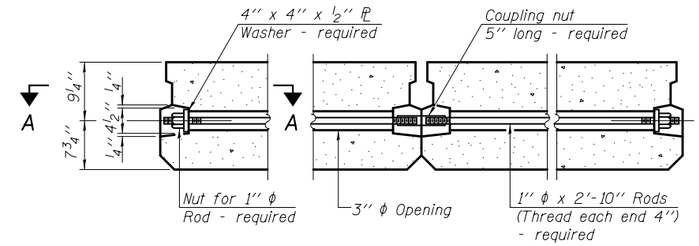

TYPICAL TRANSVERSE TIE ASSEMBLY

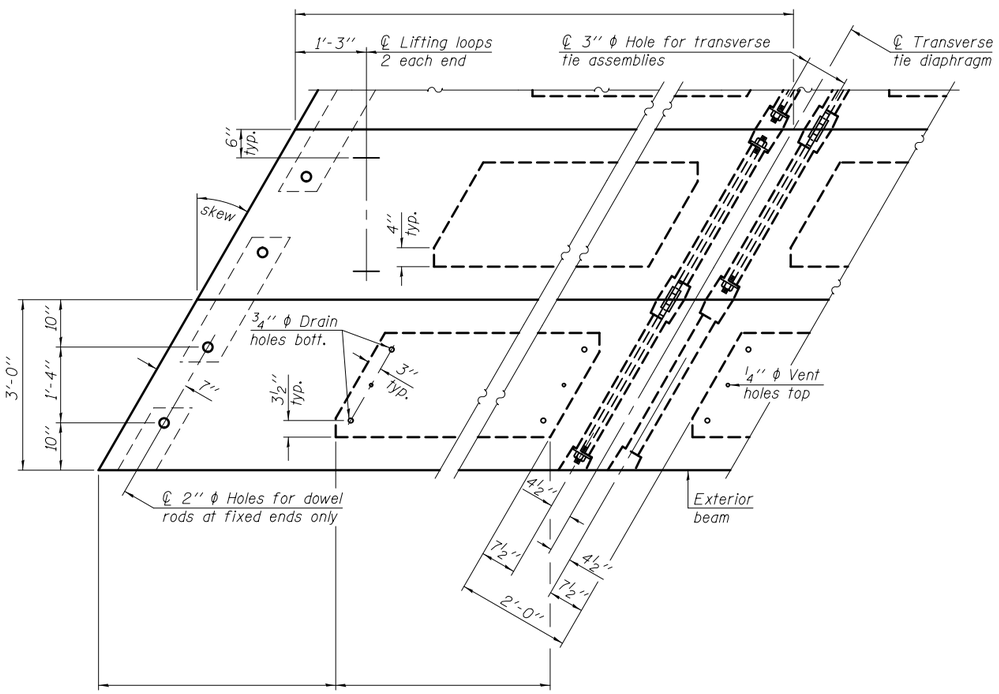

PLAN VIEW

Note: Connect beams in pairs with the transverse tie configuration shown.

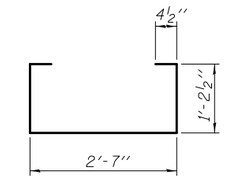

BAR S(E)

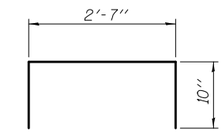

BAR S1(E)

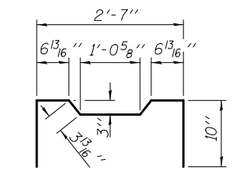

BAR S2(E)

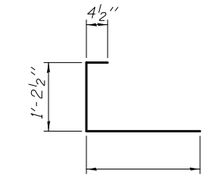

BAR S3(E)

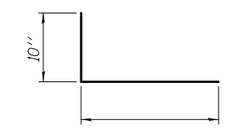

BAR S4(E)

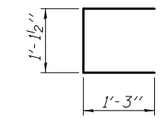

BAR U(E)

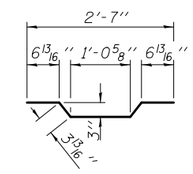

BAR A1(E)

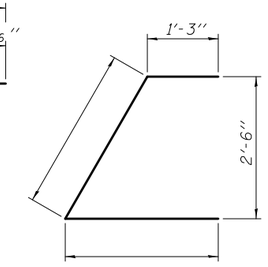

BAR U1(E)

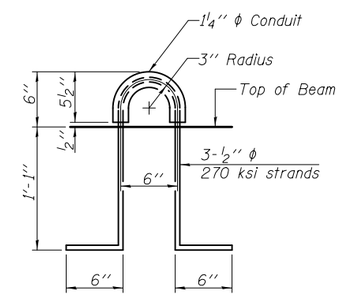

LIFTING LOOP DETAIL

NOTES

Prestressing steel shall be uncoated high strength, low relaxation 7-wire strand, Grade 270. The nominal diameter shall be ½" and the nominal cross-sectional area shall be 0.153 sq. in.

The 1" ϕ rods in the transverse tie assembly shall be tightened to a snug fit and the threads set. Pockets on exterior faces of bridge shall be filled with grout after transverse tie assembly is in place.

Two ⅛" fabric adjusting shims of the dimensions of the exterior bearing pad shall be provided for each bearing pad location.

A minimum 2½" ϕ lifting pin shall be used to engage the lifting loops during handling.

Corrosion Inhibitor, per Article 1020.05(b)(10) and 1021.07 of the Standard Specifications, shall be used in the concrete for precast prestressed concrete deck beams.

Compressive strength of prestressed concrete, f'c, shall be 6000 psi.

Compressive strength of prestressed concrete at release, f'ci, shall be 5000 psi.

BILL OF MATERIAL

Precast Prestressed Conc. Deck Bms. (17" depth)	Sq. Ft.	

PD-1736-LD 06-01-16

FILE NAME =	USER NAME =	DESIGNED -	REVISED -	STATE OF ILLINOIS DEPARTMENT OF TRANSPORTATION	17" x 36" PPC DECK BEAM DETAILS STRUCTURE NO.	F.A. RTE.	SECTION	COUNTY	TOTAL SHEETS / SHEET NO.
		CHECKED -	REVISED -						
	PLOT SCALE =	DRAWN -	REVISED -			CONTRACT NO.			
	PLOT DATE =	CHECKED -	REVISED -			ILLINOIS FED. AID PROJECT			

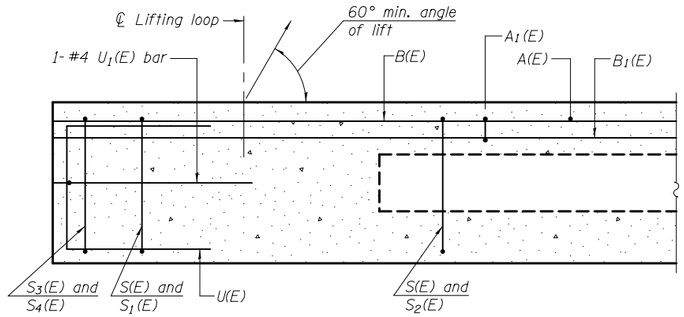

SECTION A-A

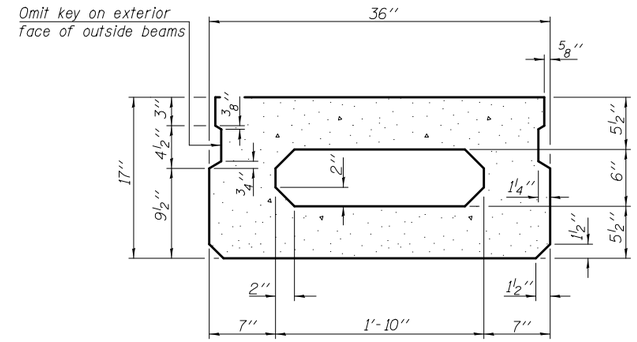

SECTION B-B
(Showing dimensions)

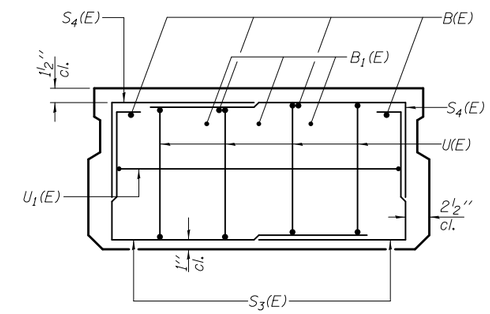

VIEW C-C

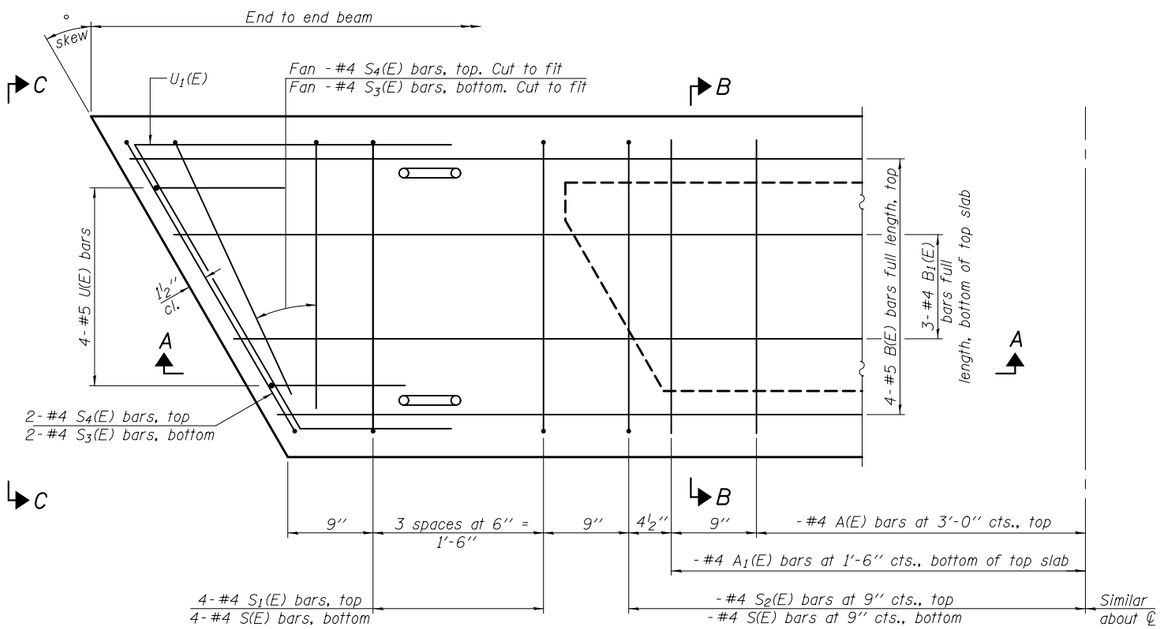

PLAN VIEW

Note: Spacing of S(E) and S_2(E) bars may be adjusted up to 4" in the immediate area of the transverse tie diaphragms to miss the block outs for the transverse ties.

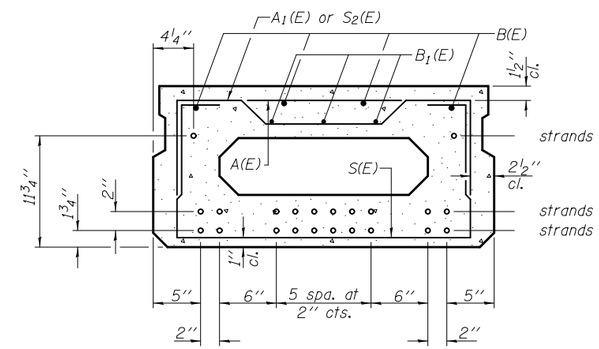

SECTION B-B
(Showing reinforcement and permissible strand locations)

Note: Place the number of strands specified in each row symmetrically about the centerline of beam in the permissible strand locations shown.

BAR LIST
ONE BEAM ONLY
(For information only)

Bar	No.	Size	Length	Shape
A(E)		#4	2'-7"	
A_1(E)		#4	2'-10"	
B(E)		#5		
B_1(E)		#4		
S(E)		#4	5'-9"	
S_1(E)	8	#4	4'-3"	
S_2(E)		#4	4'-6"	
S_3(E)		#4		
S_4(E)		#4		
U(E)	8	#5	3'-8"	
U_1(E)	2	#4		

Note: See sheet of for additional details and Bill of Material.

MINIMUM BAR LAP
#4 bar = 1'-11"
#5 bar = 2'-6"

PD-1736-R 06-01-16

FILE NAME =	USER NAME =	DESIGNED -	REVISED -	STATE OF ILLINOIS DEPARTMENT OF TRANSPORTATION	17" x 36" PPC DECK BEAM STRUCTURE NO.	F.A. RTE.	SECTION	COUNTY	TOTAL SHEETS	SHEET NO.
		CHECKED -	REVISED -							
	PLOT SCALE =	DRAWN -	REVISED -			CONTRACT NO.				
	PLOT DATE =	CHECKED -	REVISED -			ILLINOIS FED. AID PROJECT				

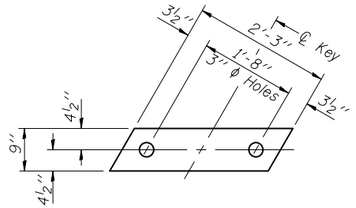

FABRIC BEARING PAD
(Interior)

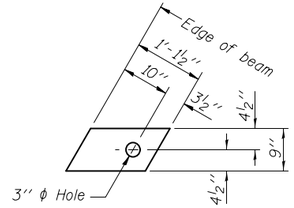

FABRIC BEARING PAD
(Exterior)

FIXED

Notes:
All bearing pads shall be 1'' thick.
Omit holes when using expansion bearings.
Expansion bearing pad shall be bonded to the substructure.

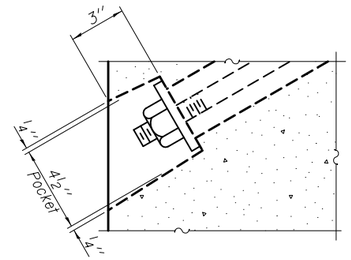

SECTION A-A

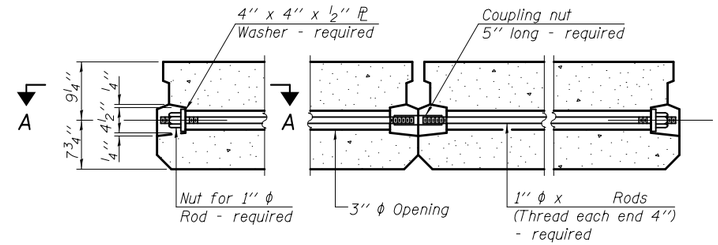

TYPICAL TRANSVERSE TIE ASSEMBLY

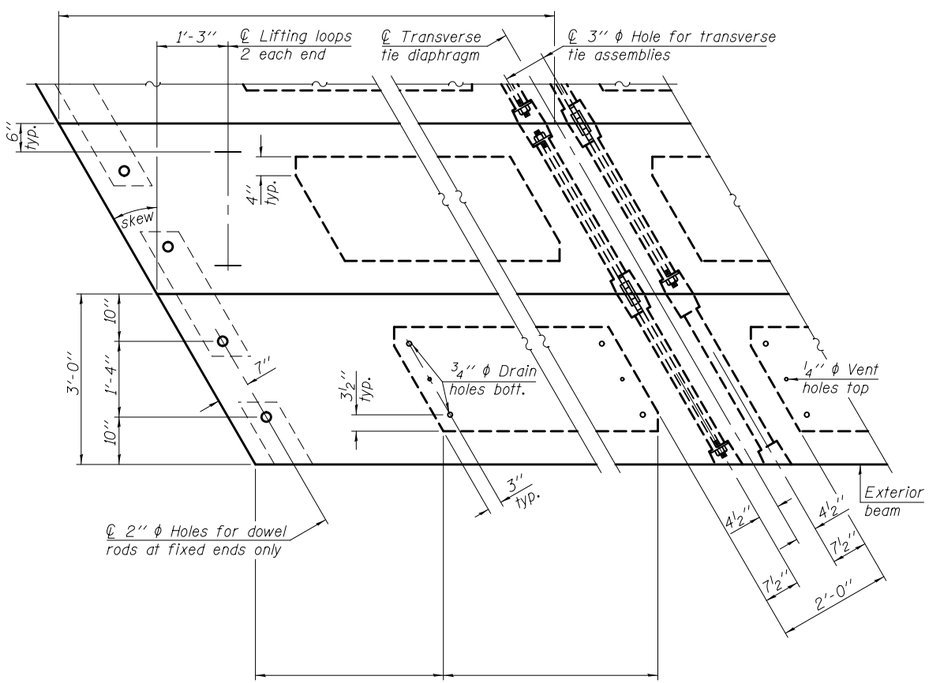

PLAN VIEW

Note: Connect beams in pairs with the transverse tie configuration shown.

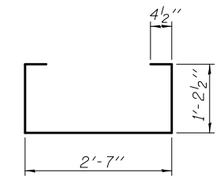

BAR S(E)

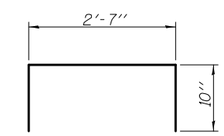

BAR S1(E)

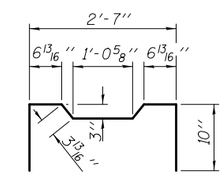

BAR S2(E)

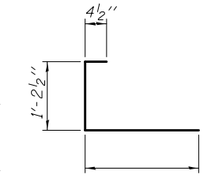

BAR S3(E)

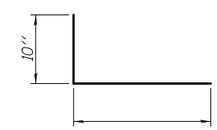

BAR S4(E)

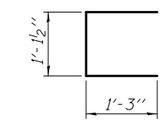

BAR U(E)

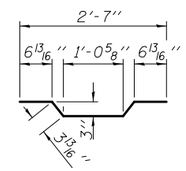

BAR A1(E)

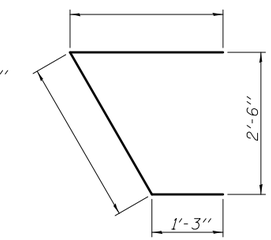

BAR U1(E)

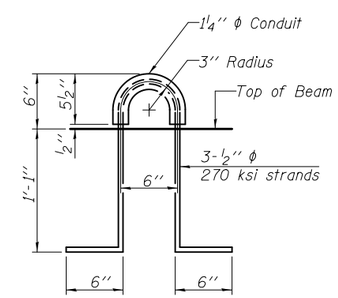

LIFTING LOOP DETAIL

NOTES

Prestressing steel shall be uncoated high strength, low relaxation 7-wire strand, Grade 270. The nominal diameter shall be ½'' and the nominal cross-sectional area shall be 0.153 sq. in.

The 1'' ϕ rods in the transverse tie assembly shall be tightened to a snug fit and the threads set. Pockets on exterior faces of bridge shall be filled with grout after transverse tie assembly is in place.

Two ⅛'' fabric adjusting shims of the dimensions of the exterior bearing pad shall be provided for each bearing pad location.

A minimum 2½'' ϕ lifting pin shall be used to engage the lifting loops during handling.

Corrosion Inhibitor, per Article 1020.05(b)(10) and 1021.07 of the Standard Specifications, shall be used in the concrete for precast prestressed concrete deck beams.

Compressive strength of prestressed concrete, f'c, shall be 6000 psi.

Compressive strength of prestressed concrete at release, f'ci, shall be 5000 psi.

BILL OF MATERIAL

Precast Prestressed Conc. Deck Bms. (17'' depth)	Sq. Ft.	

PD-1736-RD 06-01-16

FILE NAME =	USER NAME =	DESIGNED -	REVISED -
		CHECKED -	REVISED -
	PLOT SCALE =	DRAWN -	REVISED -
	PLOT DATE =	CHECKED -	REVISED -

STATE OF ILLINOIS
DEPARTMENT OF TRANSPORTATION

17'' x 36'' PPC DECK BEAM DETAILS
STRUCTURE NO.

F.A. RTE.	SECTION	COUNTY	TOTAL SHEETS	SHEET NO.
		CONTRACT NO.		
	ILLINOIS	FED. AID PROJECT		

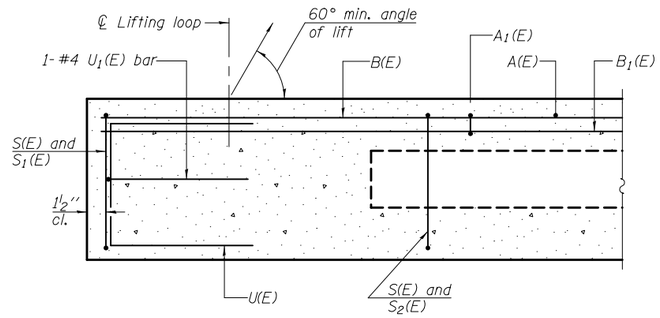

SECTION A-A

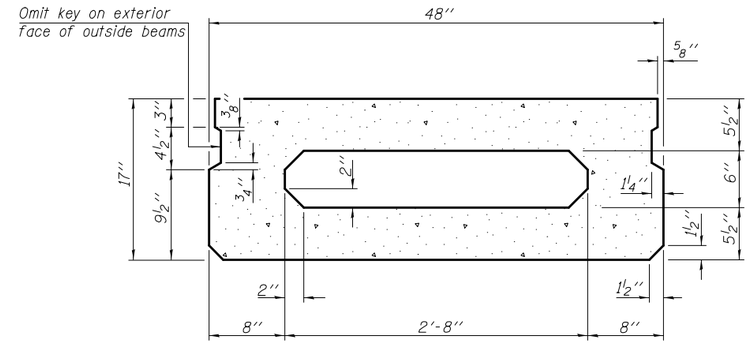

SECTION B-B

(Showing dimensions)

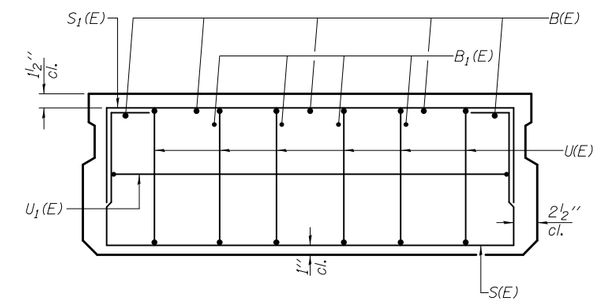

VIEW C-C

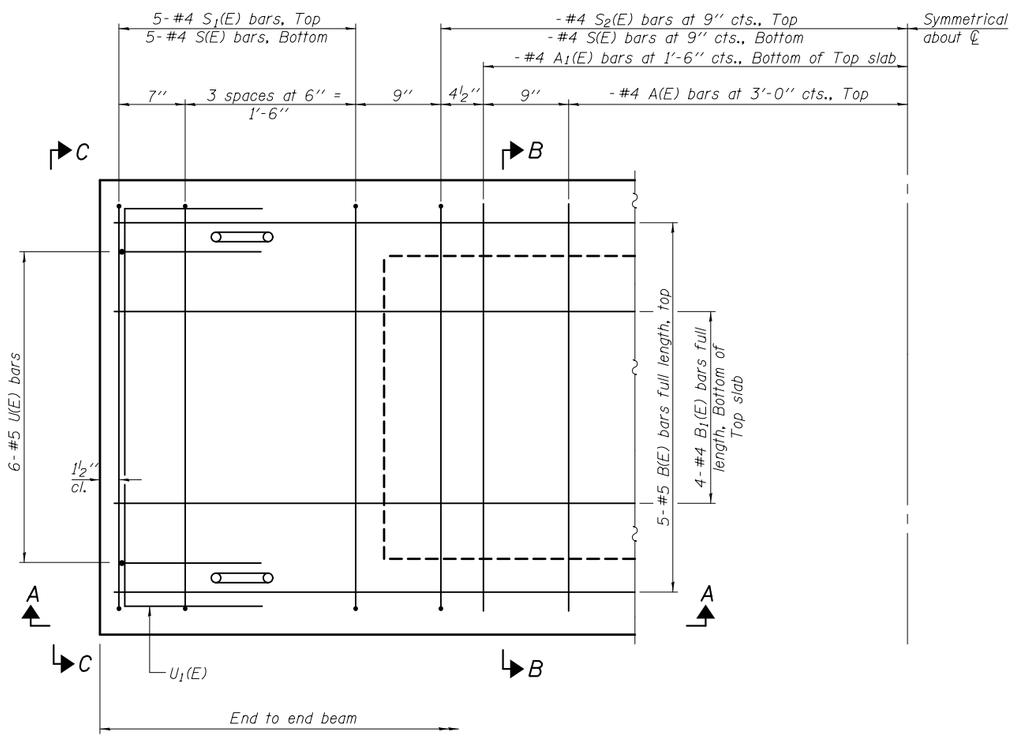

PLAN VIEW

Note: Spacing of S(E) and S2(E) bars may be adjusted up to 4" in the immediate area of the transverse tie diaphragms to miss the block outs for the transverse ties.

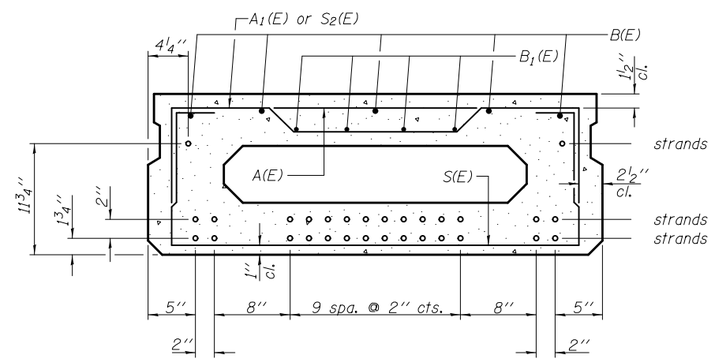

SECTION B-B

(Showing reinforcement and permissible strand locations)

Note: Place the number of strands specified in each row symmetrically about the centerline of beam in the permissible strand locations shown.

BAR LIST
ONE BEAM ONLY

(For information only)

Bar	No.	Size	Length	Shape
A(E)		#4	3'-7"	—
A1(E)		#4	3'-10"	~
B(E)		#5		—
B1(E)		#4		—
S(E)		#4	6'-9"	⊔
S1(E)	10	#4	5'-3"	⊓
S2(E)		#4	5'-6"	⊓
U(E)	12	#5	3'-8"	⊏
U1(E)	2	#4	6'-0"	⊓

Note: See sheet of for additional details and Bill of Material.

MINIMUM BAR LAP

#4 bar = 1'-11"
#5 bar = 2'-6"

PD-1748-0 06-01-16

FILE NAME =	USER NAME =	DESIGNED -	REVISED -
		CHECKED -	REVISED -
	PLOT SCALE =	DRAWN -	REVISED -
	PLOT DATE =	CHECKED -	REVISED -

STATE OF ILLINOIS
DEPARTMENT OF TRANSPORTATION

17" x 48" PPC DECK BEAM
STRUCTURE NO.

F.A. RTE.	SECTION	COUNTY	TOTAL SHEETS	SHEET NO.

CONTRACT NO.

ILLINOIS FED. AID PROJECT

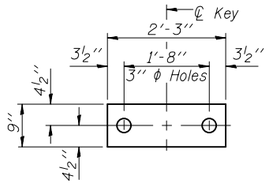

FABRIC BEARING PAD
(Interior)

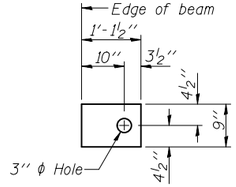

FABRIC BEARING PAD
(Exterior)

FIXED

Notes:
All bearing pads shall be 1" thick.
Omit holes when using expansion bearings.
Expansion bearing pad shall be bonded to the substructure.

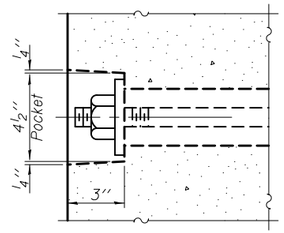

SECTION A-A

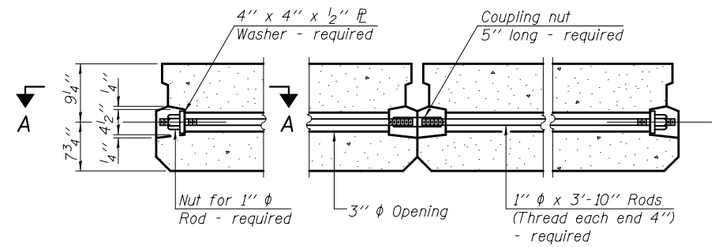

TYPICAL TRANSVERSE TIE ASSEMBLY

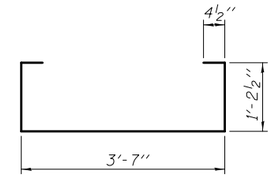

BAR S(E)

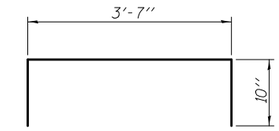

BAR S_1(E)

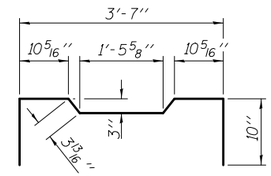

BAR S_2(E)

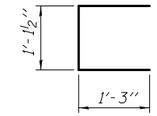

BAR U(E)

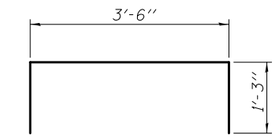

BAR U_1(E)

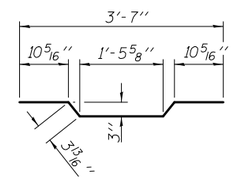

BAR A_1(E)

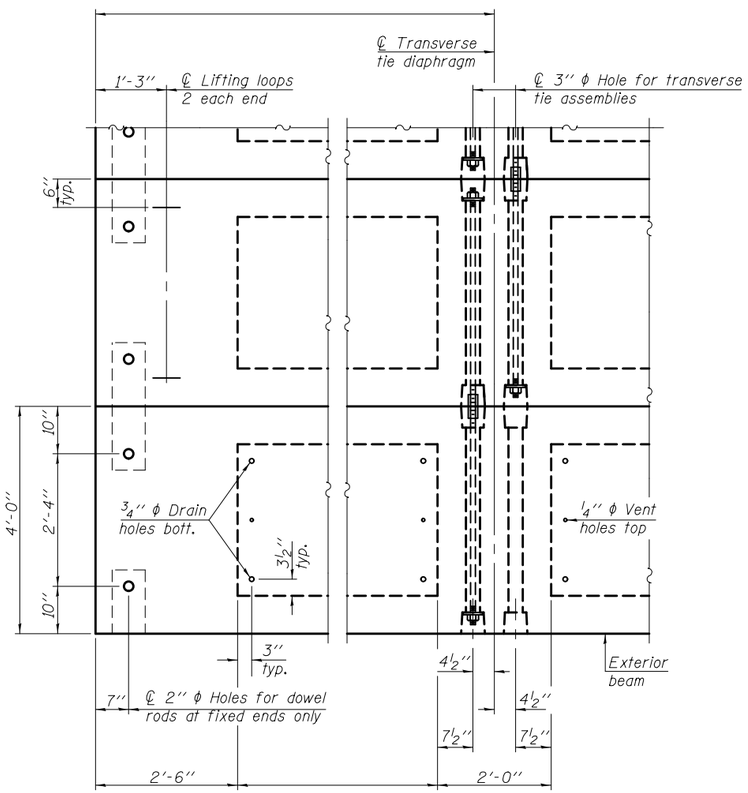

PLAN VIEW

Note: Connect beams in pairs with the transverse tie configuration shown.

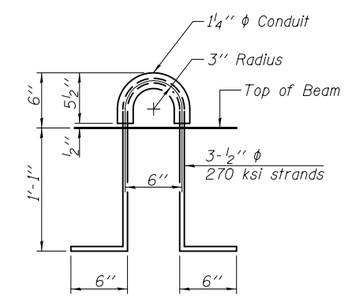

LIFTING LOOP DETAIL

NOTES

Prestressing steel shall be uncoated high strength, low relaxation 7-wire strand, Grade 270. The nominal diameter shall be ½" and the nominal cross-sectional area shall be 0.153 sq. in.

The 1" ϕ rods in the transverse tie assembly shall be tightened to a snug fit and the threads set. Pockets on exterior faces of bridge shall be filled with grout after transverse tie assembly is in place.

Two ⅛" fabric adjusting shims of the dimensions of the exterior bearing pad shall be provided for each bearing pad location.

A minimum 2½" ϕ lifting pin shall be used to engage the lifting loops during handling.

Corrosion Inhibitor, per Article 1020.05(b)(10) and 1021.07 of the Standard Specifications, shall be used in the concrete for precast prestressed concrete deck beams.

Compressive strength of prestressed concrete, f'c, shall be 6000 psi.

Compressive strength of prestressed concrete at release, f'ci, shall be 5000 psi.

BILL OF MATERIAL

Precast Prestressed Conc. Deck Bms. (17" depth)	Sq. Ft.	

PD-1748-0D 1-28-16

FILE NAME =	USER NAME =	DESIGNED -	REVISED -
		CHECKED -	REVISED -
	PLOT SCALE =	DRAWN -	REVISED -
	PLOT DATE =	CHECKED -	REVISED -

STATE OF ILLINOIS
DEPARTMENT OF TRANSPORTATION

17" x 48" PPC DECK BEAM DETAILS
STRUCTURE NO.

F.A. RTE.	SECTION	COUNTY	TOTAL SHEETS	SHEET NO.
		CONTRACT NO.		
	ILLINOIS	FED. AID PROJECT		

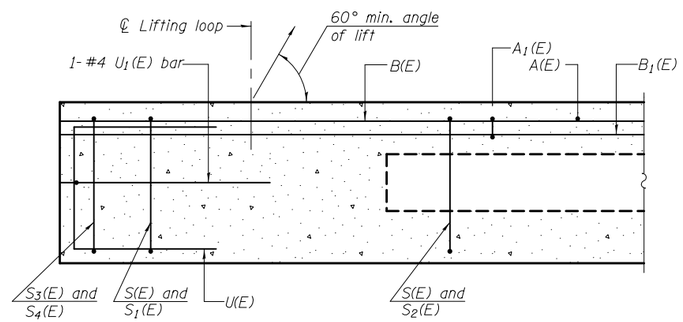

SECTION A-A

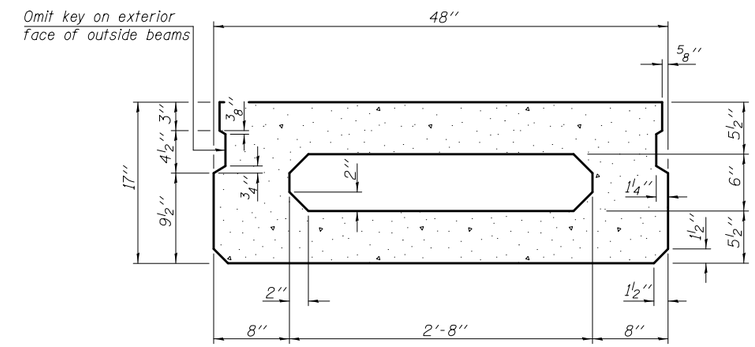

SECTION B-B
(Showing dimensions)

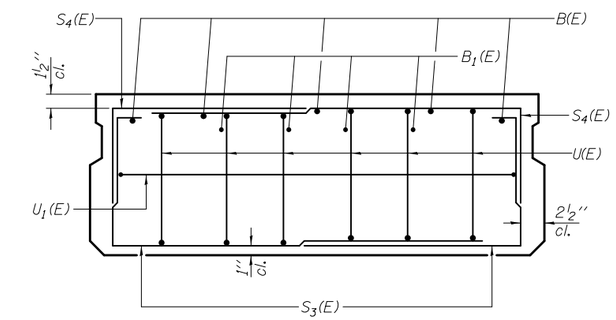

VIEW C-C

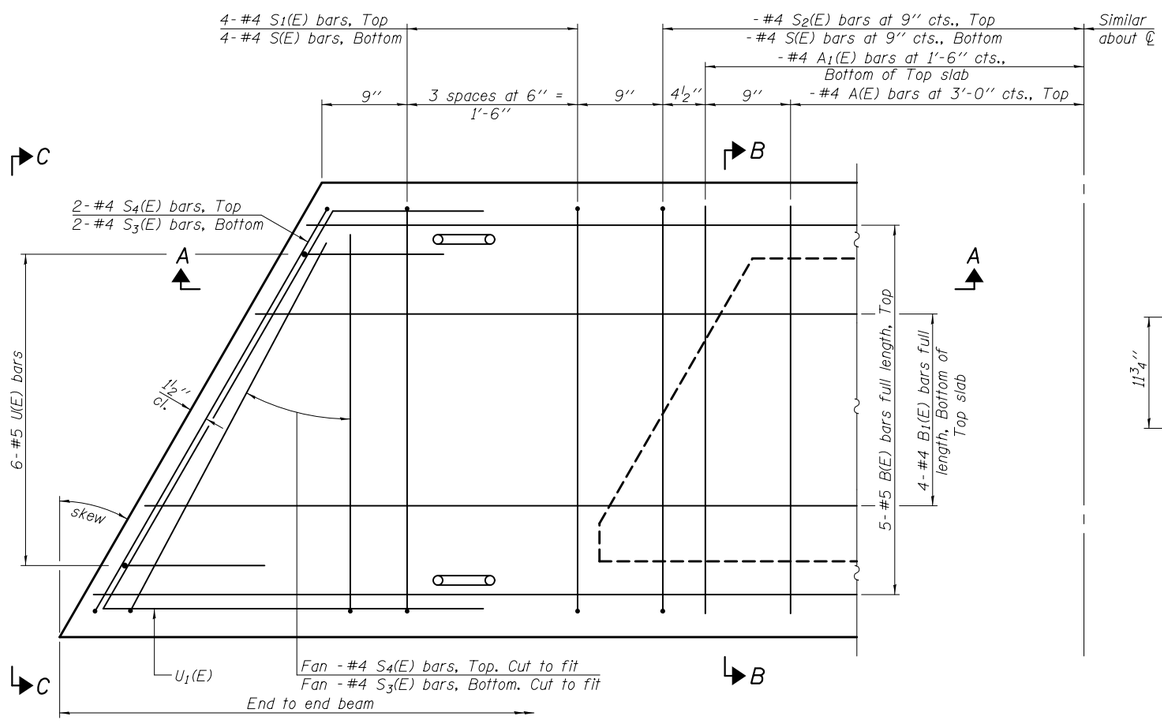

PLAN VIEW

Note: Spacing of S(E) and S_2(E) bars may be adjusted up to 4″ in the immediate area of the transverse tie diaphragms to miss the block outs for the transverse ties.

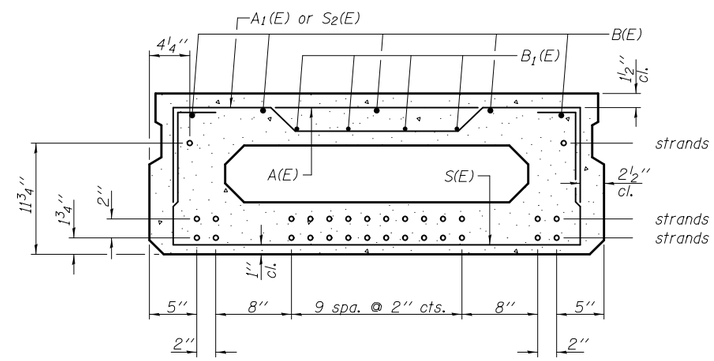

SECTION B-B
(Showing reinforcement and permissible strand locations)

Note: Place the number of strands specified in each row symmetrically about the centerline of beam in the permissible strand locations shown.

BAR LIST
ONE BEAM ONLY
(For information only)

Bar	No.	Size	Length	Shape
A(E)		#4	3′-7″	
A_1(E)		#4	3′-10″	
B(E)		#5		
B_1(E)		#4		
S(E)		#4	6′-9″	
S_1(E)	8	#4	5′-3″	
S_2(E)		#4	5′-6″	
S_3(E)		#4		
S_4(E)		#4		
U(E)	12	#5	3′-8″	
U_1(E)	2	#4		

Note: See sheet of for additional details and Bill of Material.

MINIMUM BAR LAP
#4 bar = 1′-11″
#5 bar = 2′-6″

PD-1748-L 06-01-16

FILE NAME =	USER NAME =	DESIGNED -	REVISED -
		CHECKED -	REVISED -
	PLOT SCALE =	DRAWN -	REVISED -
	PLOT DATE =	CHECKED -	REVISED -

STATE OF ILLINOIS
DEPARTMENT OF TRANSPORTATION

17″ x 48″ PPC DECK BEAM
STRUCTURE NO.

F.A. RTE.	SECTION	COUNTY	TOTAL SHEETS	SHEET NO.
		CONTRACT NO.		
	ILLINOIS	FED. AID PROJECT		

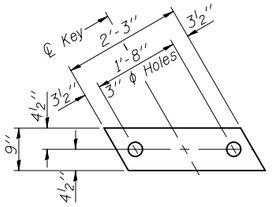

FABRIC BEARING PAD
(Interior)

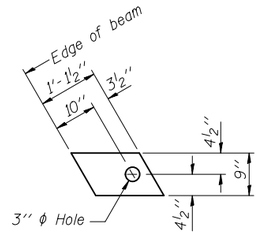

FABRIC BEARING PAD
(Exterior)

FIXED

Notes:
All bearing pads shall be 1" thick.
Omit holes when using expansion bearings.
Expansion bearing pad shall be bonded to the substructure.

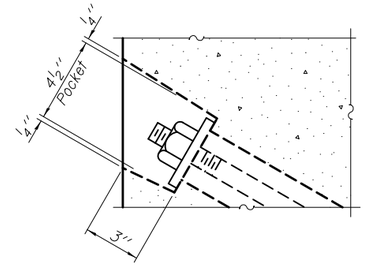

SECTION A-A

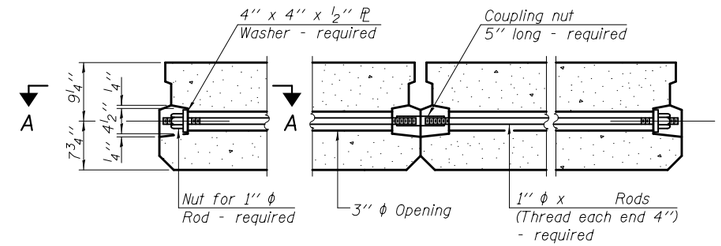

TYPICAL TRANSVERSE TIE ASSEMBLY

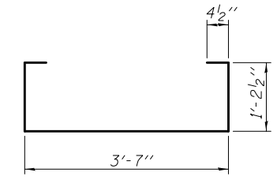

BAR S(E)

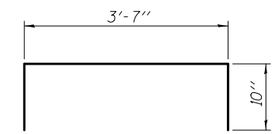

BAR S1(E)

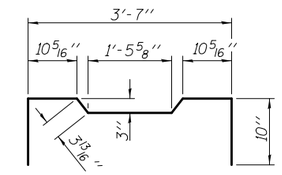

BAR S2(E)

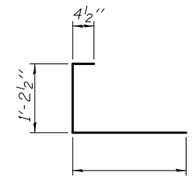

BAR S3(E)

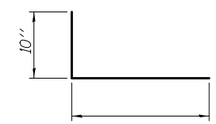

BAR S4(E)

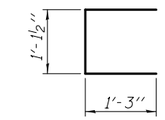

BAR U(E)

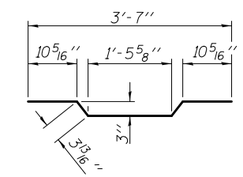

BAR A1(E)

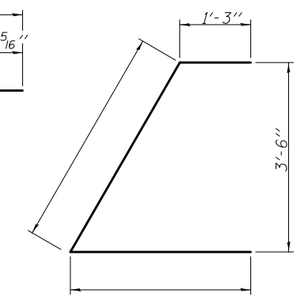

BAR U1(E)

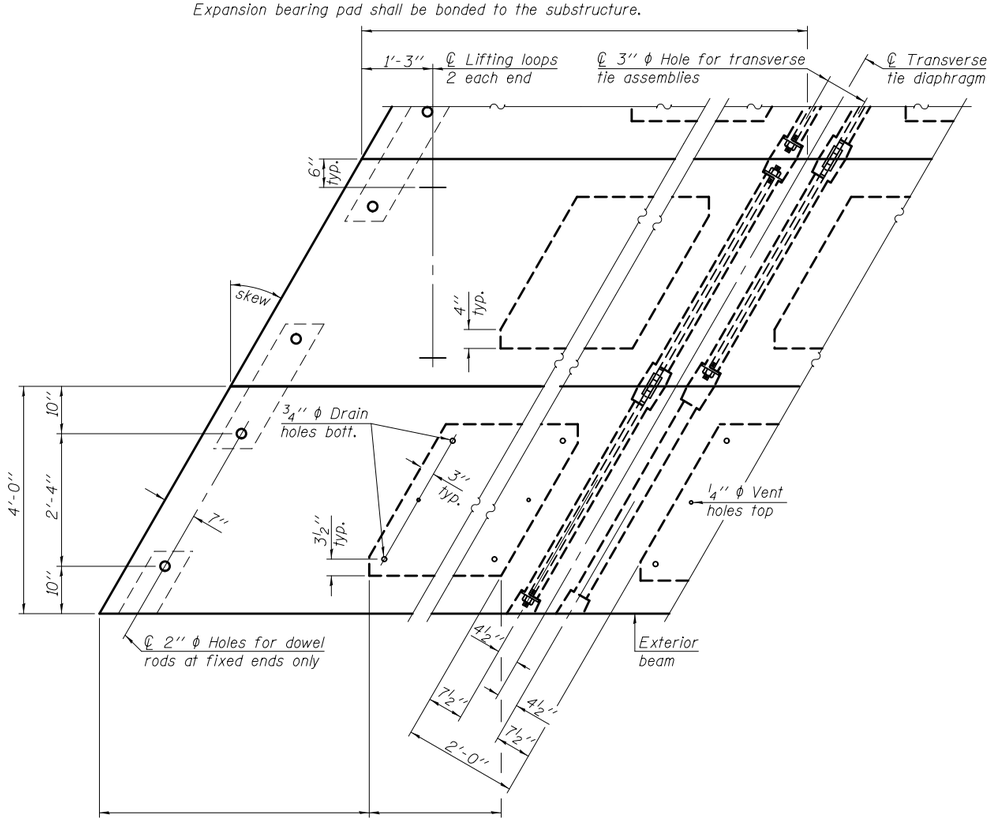

PLAN VIEW

Note: Connect beams in pairs with the transverse tie configuration shown.

NOTES

Prestressing steel shall be uncoated high strength, low relaxation 7-wire strand, Grade 270. The nominal diameter shall be ½" and the nominal cross-sectional area shall be 0.153 sq. in.

The 1" ϕ rods in the transverse tie assembly shall be tightened to a snug fit and the threads set. Pockets on exterior faces of bridge shall be filled with grout after transverse tie assembly is in place.

Two ⅛" fabric adjusting shims of the dimensions of the exterior bearing pad shall be provided for each bearing pad location.

A minimum 2½" ϕ lifting pin shall be used to engage the lifting loops during handling.

Corrosion Inhibitor, per Article 1020.05(b)(10) and 1021.07 of the Standard Specifications, shall be used in the concrete for precast prestressed concrete deck beams.

Compressive strength of prestressed concrete, f'c, shall be 6000 psi.

Compressive strength of prestressed concrete at release, f'ci, shall be 5000 psi.

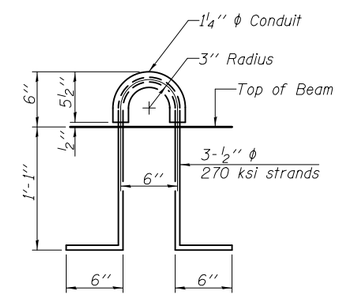

LIFTING LOOP DETAIL

BILL OF MATERIAL

Precast Prestressed Conc. Deck Bms. (17" depth)	Sq. Ft.	

PD-1748-LD 06-01-16

FILE NAME =	USER NAME =	DESIGNED -	REVISED -	STATE OF ILLINOIS DEPARTMENT OF TRANSPORTATION	17" x 48" PPC DECK BEAM DETAILS STRUCTURE NO.	F.A. RTE.	SECTION	COUNTY	TOTAL SHEETS	SHEET NO.
		CHECKED -	REVISED -							
	PLOT SCALE =	DRAWN -	REVISED -					CONTRACT NO.		
	PLOT DATE =	CHECKED -	REVISED -				ILLINOIS	FED. AID PROJECT		

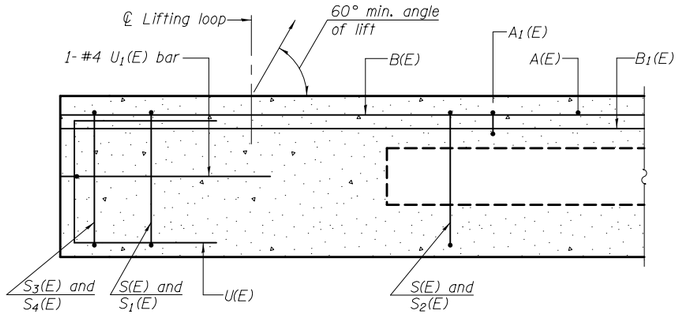

SECTION A-A

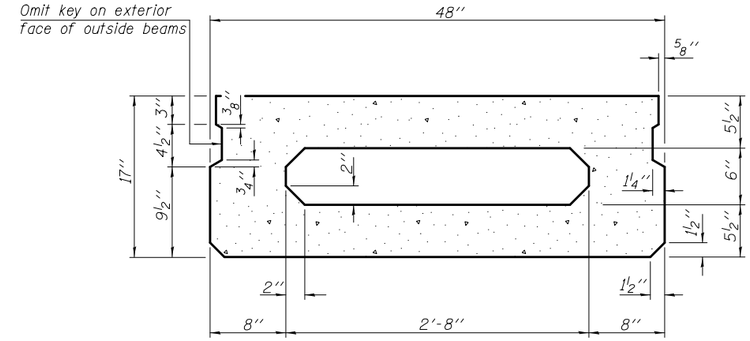

SECTION B-B
(Showing dimensions)

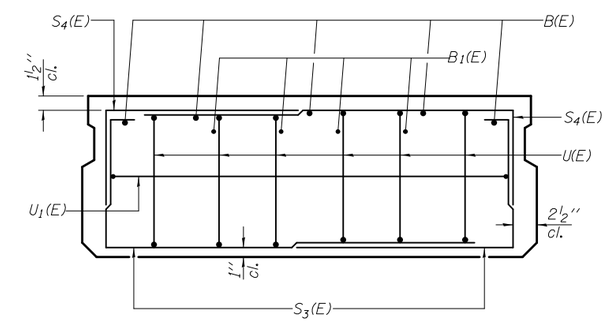

VIEW C-C

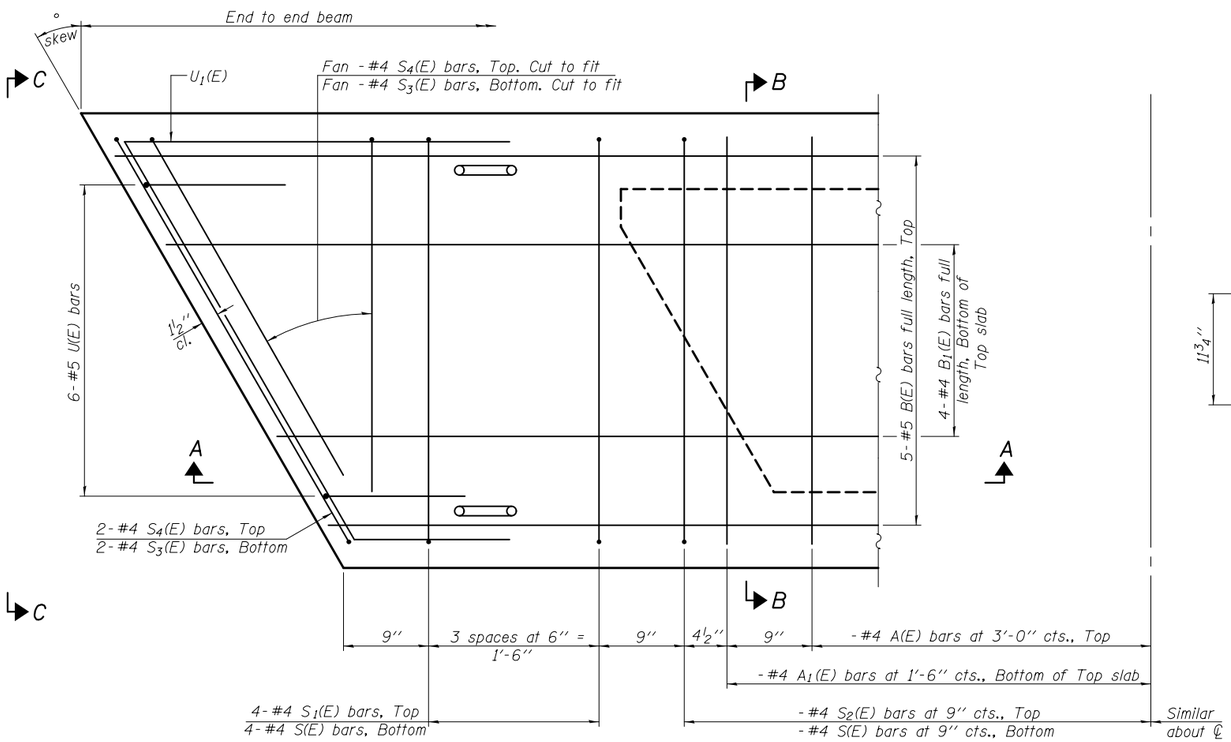

PLAN VIEW

Note: Spacing of S(E) and S2(E) bars may be adjusted up to 4″ in the immediate area of the transverse tie diaphragms to miss the block outs for the transverse ties.

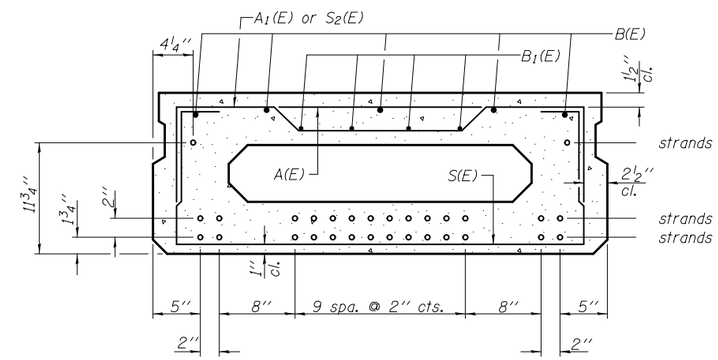

SECTION B-B
(Showing reinforcement and permissible strand locations)

Note: Place the number of strands specified in each row symmetrically about the centerline of beam in the permissible strand locations shown.

BAR LIST
ONE BEAM ONLY
(For information only)

Bar	No.	Size	Length	Shape
A(E)		#4	3′-7″	
A1(E)		#4	3′-10″	
B(E)		#5		
B1(E)		#4		
S(E)		#4	6′-9″	
S1(E)	8	#4	5′-3″	
S2(E)		#4	5′-6″	
S3(E)		#4		
S4(E)		#4		
U(E)	12	#5	3′-8″	
U1(E)	2	#4		

Note: See sheet of for additional details and Bill of Material.

MINIMUM BAR LAP
#4 bar = 1′-11″
#5 bar = 2′-6″

PD-1748-R 06-01-16

FILE NAME =	USER NAME =	DESIGNED -	REVISED -	STATE OF ILLINOIS DEPARTMENT OF TRANSPORTATION	17″ x 48″ PPC DECK BEAM STRUCTURE NO.	F.A. RTE.	SECTION	COUNTY	TOTAL SHEETS	SHEET NO.
		CHECKED -	REVISED -							
	PLOT SCALE =	DRAWN -	REVISED -					CONTRACT NO.		
	PLOT DATE =	CHECKED -	REVISED -				ILLINOIS	FED. AID PROJECT		

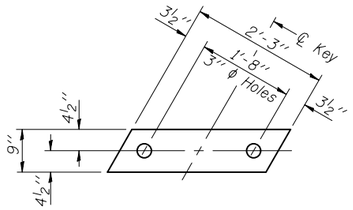

FABRIC BEARING PAD
(Interior)

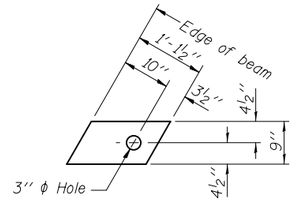

FABRIC BEARING PAD
(Exterior)

FIXED

Notes:
All bearing pads shall be 1'' thick.
Omit holes when using expansion bearings.
Expansion bearing pad shall be bonded to the substructure.

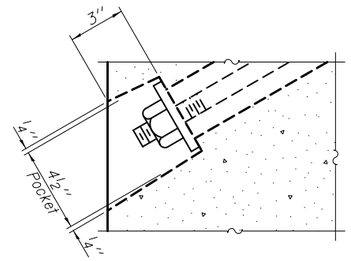

SECTION A-A

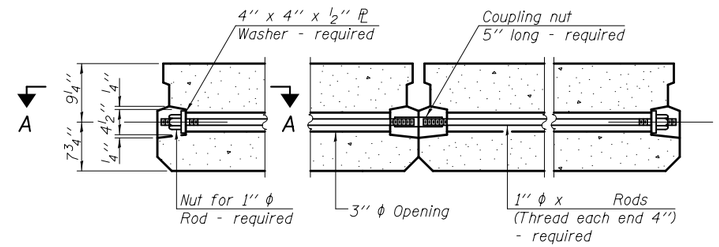

TYPICAL TRANSVERSE TIE ASSEMBLY

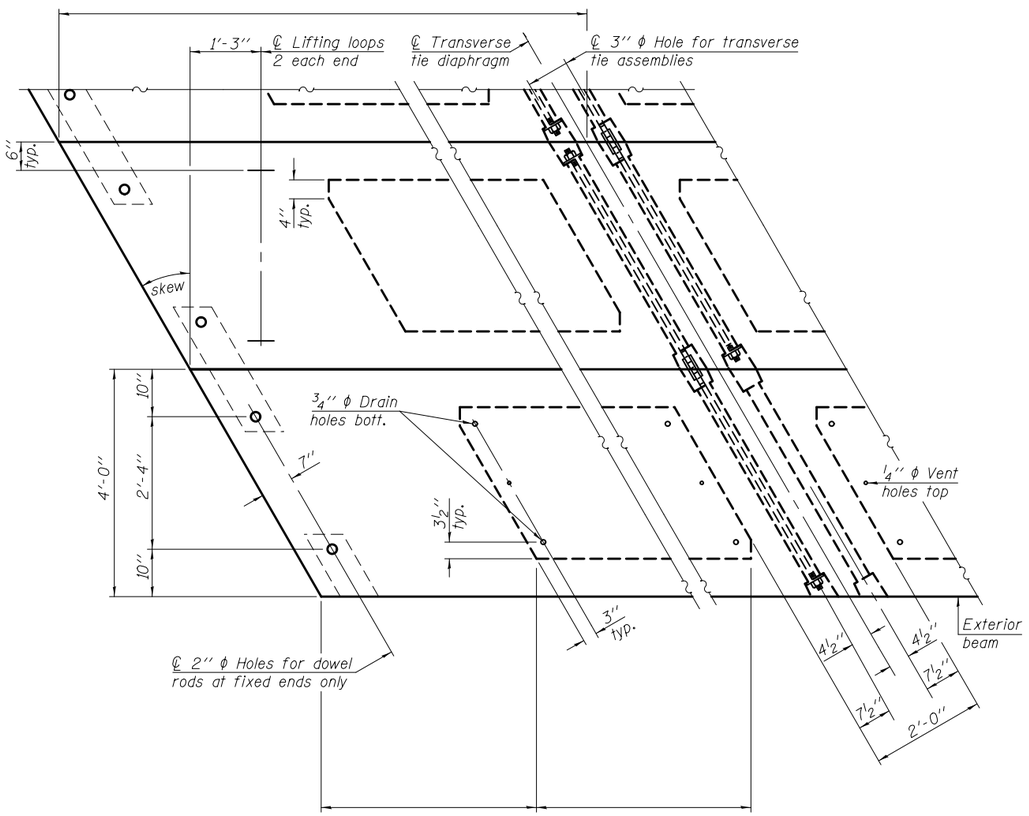

PLAN VIEW

Note: Connect beams in pairs with the transverse tie configuration shown.

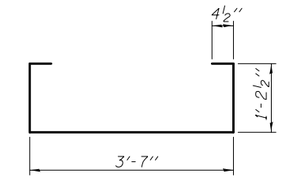

BAR S(E)

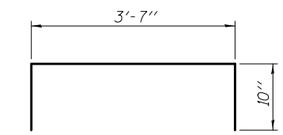

BAR S1(E)

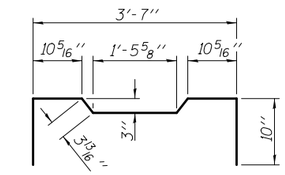

BAR S2(E)

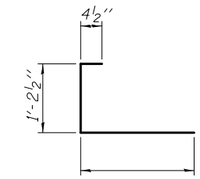

BAR S3(E)

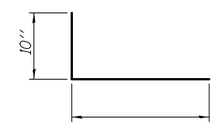

BAR S4(E)

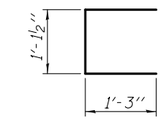

BAR U(E)

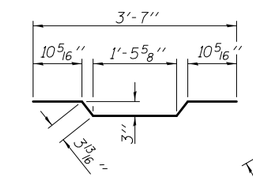

BAR A1(E)

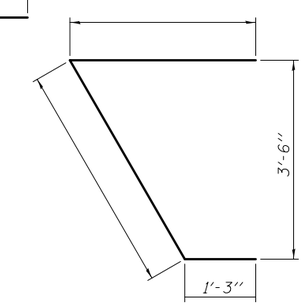

BAR U1(E)

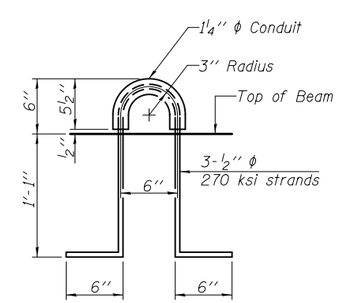

LIFTING LOOP DETAIL

NOTES

Prestressing steel shall be uncoated high strength, low relaxation 7-wire strand, Grade 270. The nominal diameter shall be ½'' and the nominal cross-sectional area shall be 0.153 sq. in.

The 1'' ϕ rods in the transverse tie assembly shall be tightened to a snug fit and the threads set. Pockets on exterior faces of bridge shall be filled with grout after transverse tie assembly is in place.

Two ⅛'' fabric adjusting shims of the dimensions of the exterior bearing pad shall be provided for each bearing pad location.

A minimum 2½'' ϕ lifting pin shall be used to engage the lifting loops during handling.

Corrosion Inhibitor, per Article 1020.05(b)(10) and 1021.07 of the Standard Specifications, shall be used in the concrete for precast prestressed concrete deck beams.

Compressive strength of prestressed concrete, f'c, shall be 6000 psi.

Compressive strength of prestressed concrete at release, f'ci, shall be 5000 psi.

BILL OF MATERIAL

Precast Prestressed Conc. Deck Bms. (17'' depth)	Sq. Ft.	

PD-1748-RD 06-01-16

FILE NAME =	USER NAME =	DESIGNED -	REVISED -	STATE OF ILLINOIS DEPARTMENT OF TRANSPORTATION	17'' x 48'' PPC DECK BEAM DETAILS STRUCTURE NO.	F.A. RTE.	SECTION	COUNTY	TOTAL SHEETS / SHEET NO.
		CHECKED -	REVISED -						
	PLOT SCALE =	DRAWN -	REVISED -			CONTRACT NO.			
	PLOT DATE =	CHECKED -	REVISED -			ILLINOIS FED. AID PROJECT			

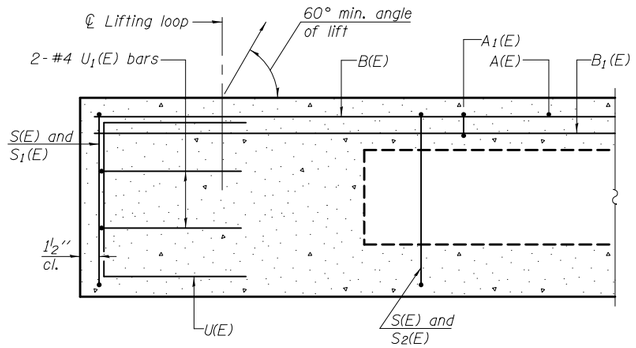

SECTION A-A

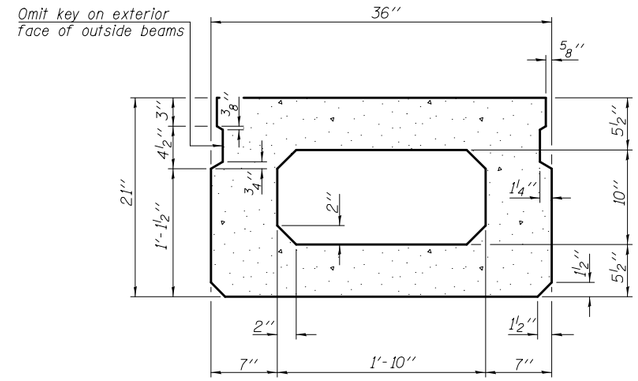

SECTION B-B

(Showing dimensions)

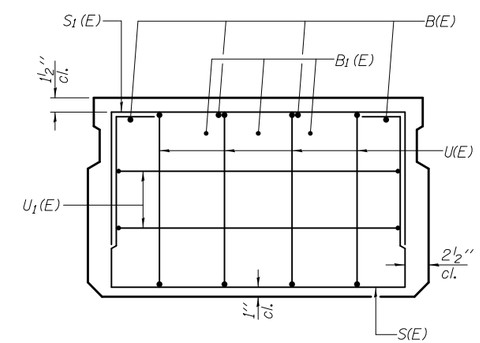

VIEW C-C

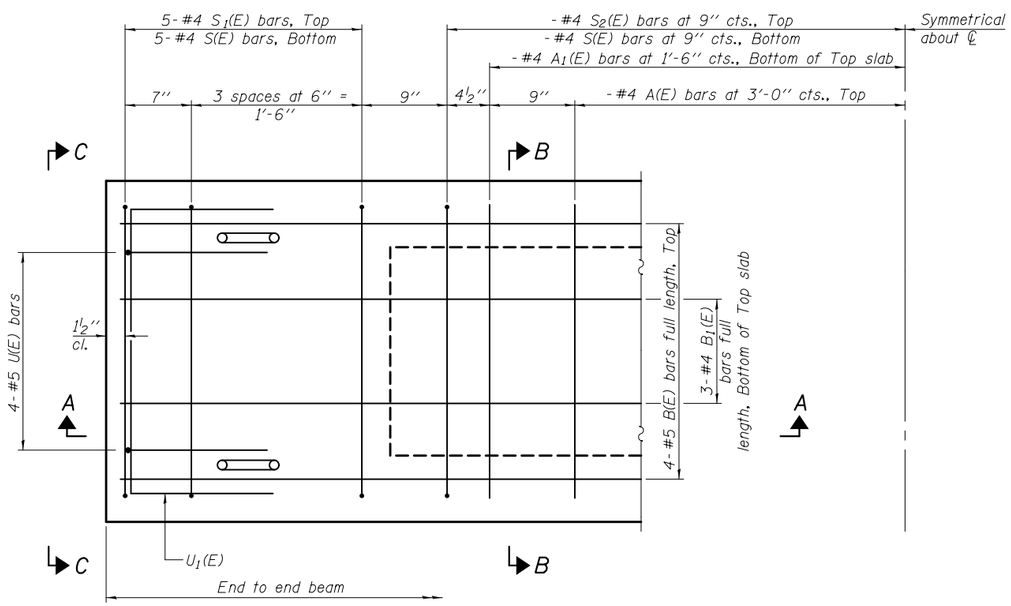

PLAN VIEW

Note: Spacing of S(E) and S2(E) bars may be adjusted up to 4" in the immediate area of the transverse tie diaphragms to miss the block outs for the transverse ties.

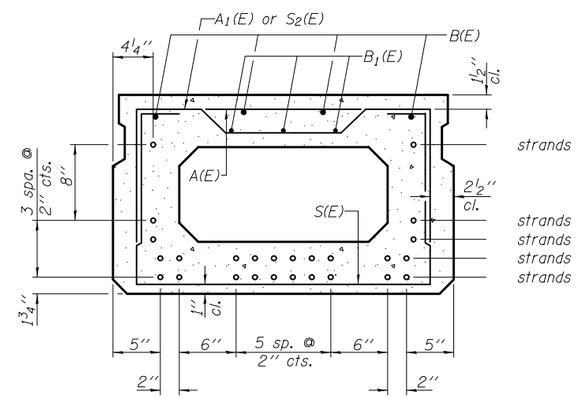

SECTION B-B

(Showing reinforcement and permissible strand locations)

Note: Place the number of strands specified in each row symmetrically about the centerline of beam in the permissible strand locations shown.

BAR LIST
ONE BEAM ONLY

(For information only)

Bar	No.	Size	Length	Shape
A(E)		#4	2'-7"	—
A1(E)		#4	2'-10"	
B(E)		#5		—
B1(E)		#4		—
S(E)		#4	6'-5"	
S1(E)	10	#4	4'-11"	
S2(E)		#4	5'-2"	
U(E)	8	#5	4'-0"	
U1(E)	4	#4	5'-0"	

Note: See sheet of for additional details and Bill of Material.

MINIMUM BAR LAP

#4 bar = 1'-11"
#5 bar = 2'-6"

PD-2136-0 06-01-16

FILE NAME =	USER NAME =	DESIGNED -	REVISED -	STATE OF ILLINOIS DEPARTMENT OF TRANSPORTATION	21" x 36" PPC DECK BEAM STRUCTURE NO.	F.A. RTE.	SECTION	COUNTY	TOTAL SHEETS	SHEET NO.
		CHECKED -	REVISED -							
	PLOT SCALE =	DRAWN -	REVISED -			CONTRACT NO.				
	PLOT DATE =	CHECKED -	REVISED -			ILLINOIS	FED. AID PROJECT			

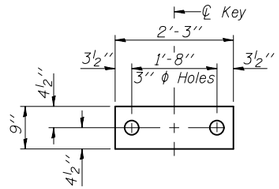

FABRIC BEARING PAD
(Interior)

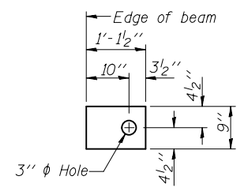

FABRIC BEARING PAD
(Exterior)

FIXED

Notes:
All bearing pads shall be 1" thick.
Omit holes when using expansion bearings.
Expansion bearing pad shall be bonded to the substructure.

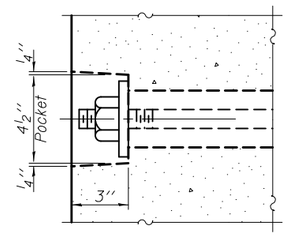

SECTION A-A

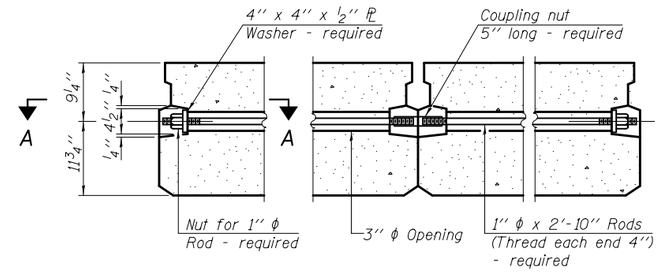

TYPICAL TRANSVERSE TIE ASSEMBLY

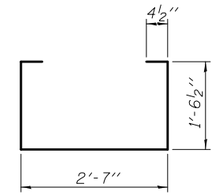

BAR S(E)

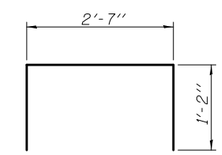

BAR S1(E)

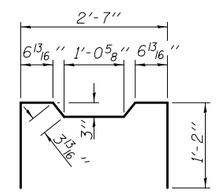

BAR S2(E)

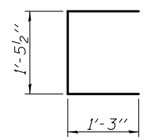

BAR U(E)

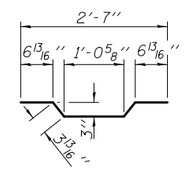

BAR A1(E)

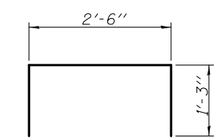

BAR U1(E)

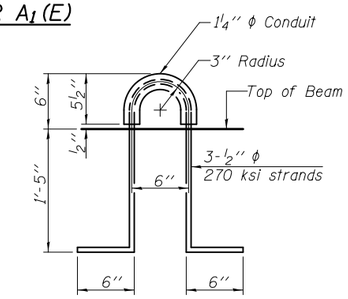

LIFTING LOOP DETAIL

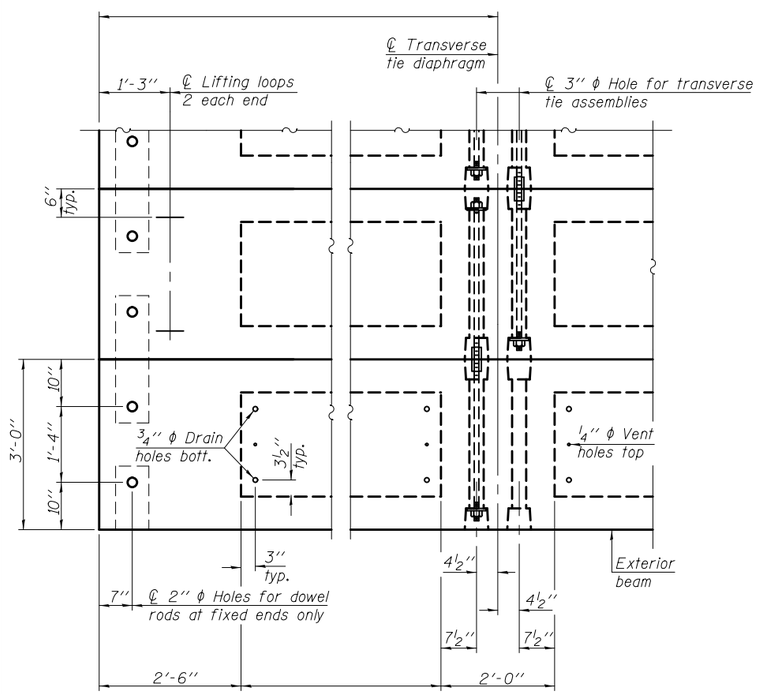

PLAN VIEW

Note: Connect beams in pairs with the transverse tie configuration shown.

NOTES

Prestressing steel shall be uncoated high strength, low relaxation 7-wire strand, Grade 270. The nominal diameter shall be ½" and the nominal cross-sectional area shall be 0.153 sq. in.

The 1" ϕ rods in the transverse tie assembly shall be tightened to a snug fit and the threads set. Pockets on exterior faces of bridge shall be filled with grout after transverse tie assembly is in place.

Two ⅛" fabric adjusting shims of the dimensions of the exterior bearing pad shall be provided for each bearing pad location.

A minimum 2½" ϕ lifting pin shall be used to engage the lifting loops during handling.

Corrosion Inhibitor, per Article 1020.05(b)(10) and 1021.07 of the Standard Specifications, shall be used in the concrete for precast prestressed concrete deck beams.

Compressive strength of prestressed concrete, f'c, shall be 6000 psi.

Compressive strength of prestressed concrete at release, f'ci, shall be 5000 psi.

BILL OF MATERIAL

Precast Prestressed Conc. Deck Bms. (21" depth)	Sq. Ft.	

PD-2136-0D 1-28-16

FILE NAME =	USER NAME =	DESIGNED -	REVISED -
		CHECKED -	REVISED -
	PLOT SCALE =	DRAWN -	REVISED -
	PLOT DATE =	CHECKED -	REVISED -

STATE OF ILLINOIS
DEPARTMENT OF TRANSPORTATION

21" x 36" PPC DECK BEAM DETAILS
STRUCTURE NO.

F.A. RTE.	SECTION	COUNTY	TOTAL SHEETS	SHEET NO.
		CONTRACT NO.		
	ILLINOIS	FED. AID PROJECT		

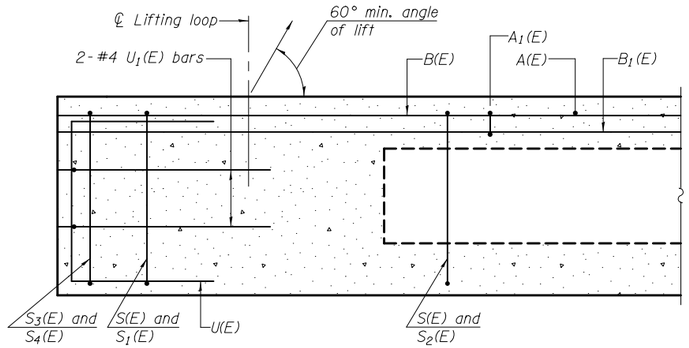

SECTION A-A

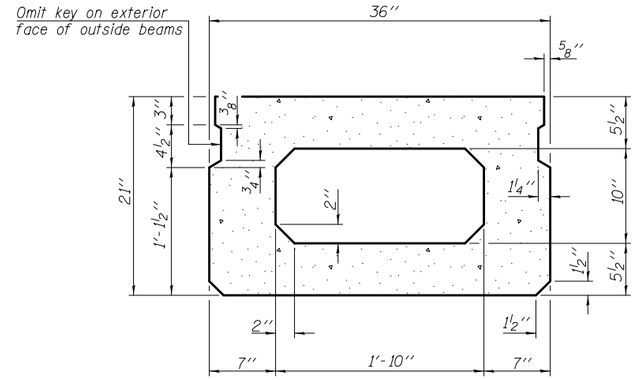

SECTION B-B

(Showing dimensions)

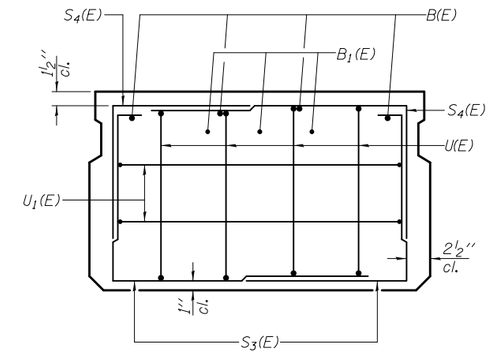

VIEW C-C

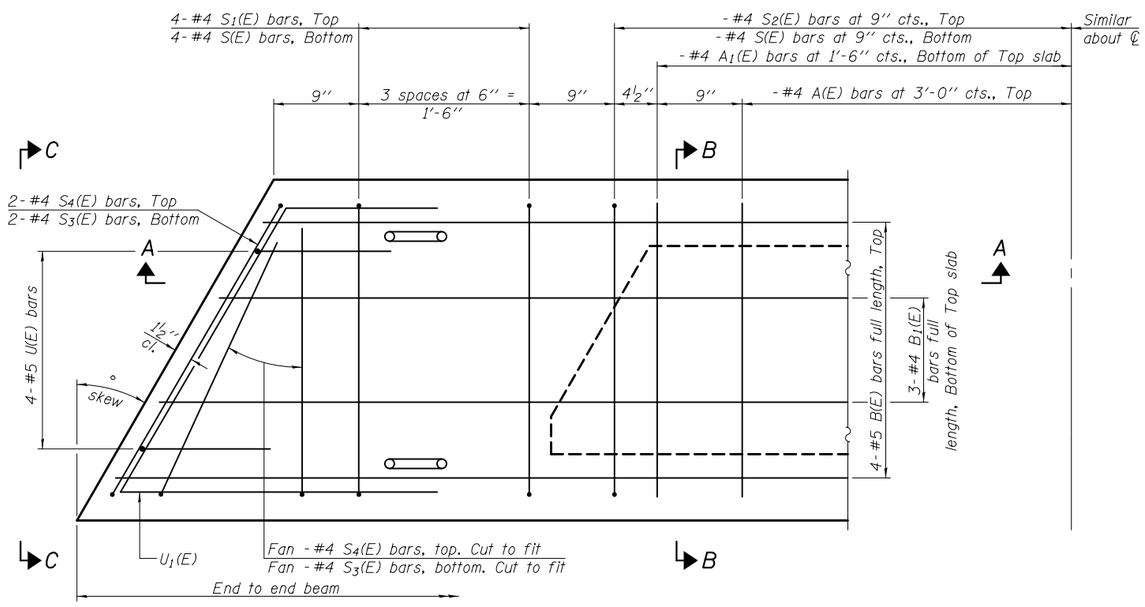

PLAN VIEW

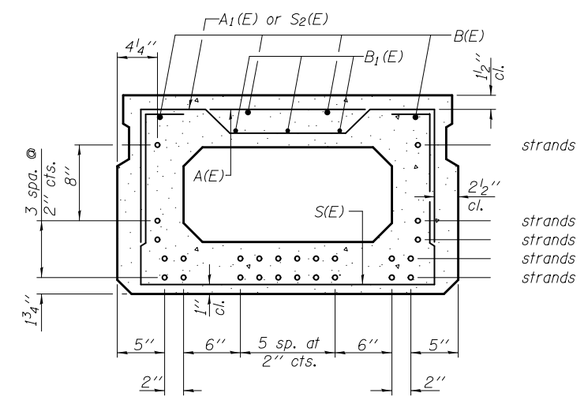

SECTION B-B

(Showing reinforcement and permissible strand locations)

Note: Place the number of strands specified in each row symmetrically about the centerline of beam in the permissible strand locations shown.

BAR LIST
ONE BEAM ONLY

(For information only)

Bar	No.	Size	Length	Shape
A(E)		#4	2'-7''	
A1(E)		#4	2'-10''	
B(E)		#5		
B1(E)		#4		
S(E)		#4	6'-5''	
S1(E)	8	#4	4'-11''	
S2(E)		#4	5'-2''	
S3(E)		#4		
S4(E)		#4		
U(E)	8	#5	4'-0''	
U1(E)	4	#4		

Note: See sheet of for additional details and Bill of Material.

Note: Spacing of S(E) and S2(E) bars may be adjusted up to 4'' in the immediate area of the transverse tie diaphragms to miss the block outs for the transverse ties.

MINIMUM BAR LAP

#4 bar = 1'-11''
#5 bar = 2'-6''

PD-2136-L 06-01-16

FILE NAME =	USER NAME =	DESIGNED -	REVISED -	STATE OF ILLINOIS DEPARTMENT OF TRANSPORTATION	21'' x 36'' PPC DECK BEAM STRUCTURE NO.	F.A. RTE.	SECTION	COUNTY	TOTAL SHEETS	SHEET NO.
		CHECKED -	REVISED -							
	PLOT SCALE =	DRAWN -	REVISED -			CONTRACT NO.				
	PLOT DATE =	CHECKED -	REVISED -			ILLINOIS FED. AID PROJECT				

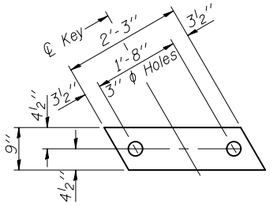

FABRIC BEARING PAD
(Interior)

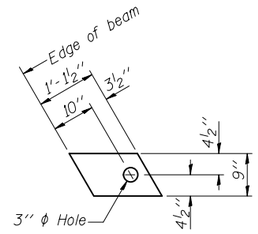

FABRIC BEARING PAD
(Exterior)

FIXED

Notes:
All bearing pads shall be 1" thick.
Omit holes when using expansion bearings.
Expansion bearing pad shall be bonded to the substructure.

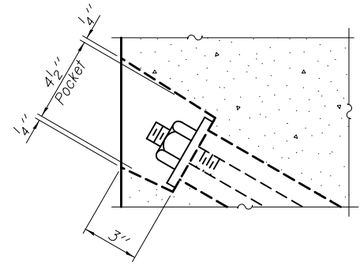

SECTION A-A

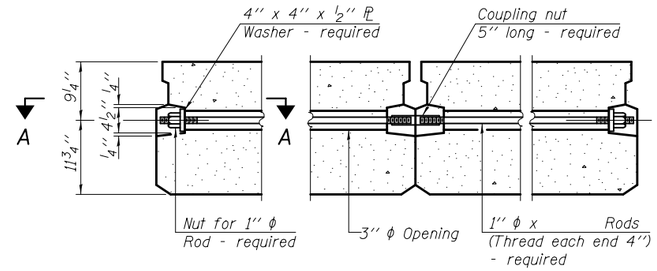

TYPICAL TRANSVERSE TIE ASSEMBLY

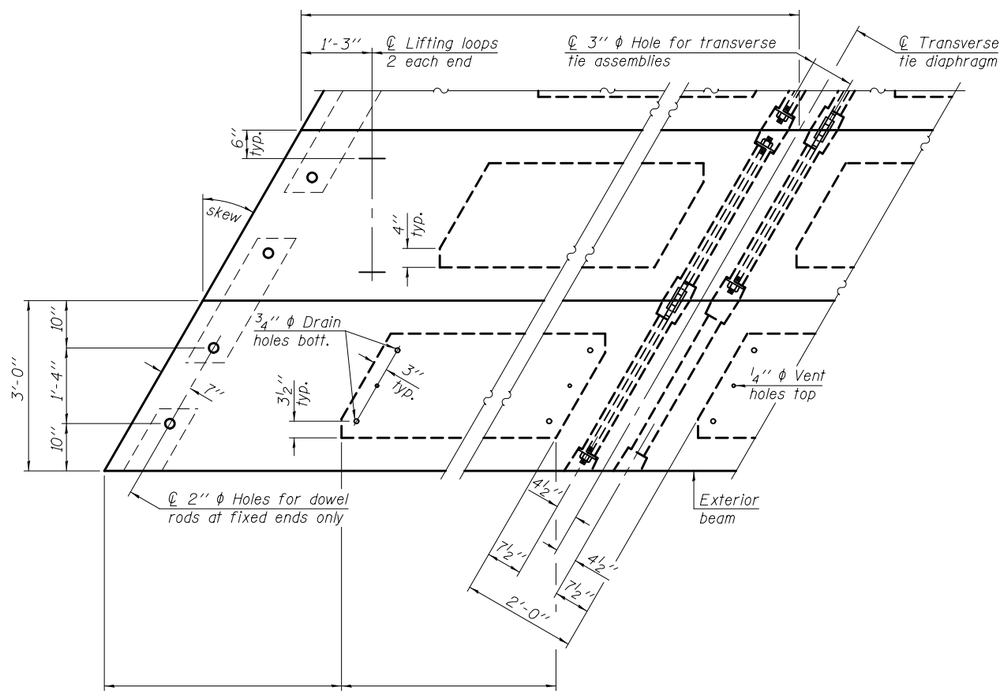

PLAN VIEW

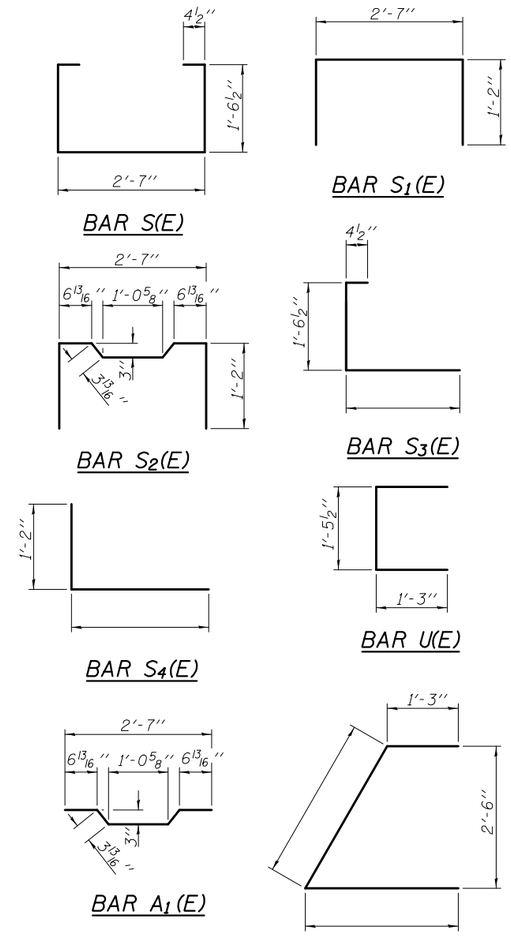

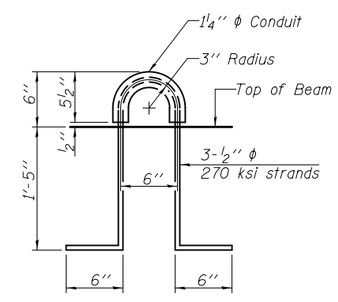

LIFTING LOOP DETAIL

Note:
Connect beams in pairs with the transverse tie configuration shown.

NOTES

Prestressing steel shall be uncoated high strength, low relaxation 7-wire strand, Grade 270. The nominal diameter shall be ½" and the nominal cross-sectional area shall be 0.153 sq. in.

The 1" ϕ rods in the transverse tie assembly shall be tightened to a snug fit and the threads set. Pockets on exterior faces of bridge shall be filled with grout after transverse tie assembly is in place.

Two ⅛" fabric adjusting shims of the dimensions of the exterior bearing pad shall be provided for each bearing pad location.

A minimum 2½" ϕ lifting pin shall be used to engage the lifting loops during handling.

Corrosion Inhibitor, per Article 1020.05(b)(10) and 1021.07 of the Standard Specifications, shall be used in the concrete for precast prestressed concrete deck beams.

Compressive strength of prestressed concrete, f'c, shall be 6000 psi.

Compressive strength of prestressed concrete at release, f'ci, shall be 5000 psi.

BILL OF MATERIAL

Precast Prestressed Conc. Deck Bms. (21" depth)	Sq. Ft.	

PD-2136-LD 1-28-16

FILE NAME =	USER NAME =	DESIGNED -	REVISED -	STATE OF ILLINOIS DEPARTMENT OF TRANSPORTATION	21" x 36" PPC DECK BEAM DETAILS STRUCTURE NO.	F.A. RTE.	SECTION	COUNTY	TOTAL SHEETS / SHEET NO.
		CHECKED -	REVISED -						
	PLOT SCALE =	DRAWN -	REVISED -					CONTRACT NO.	
	PLOT DATE =	CHECKED -	REVISED -				ILLINOIS	FED. AID PROJECT	

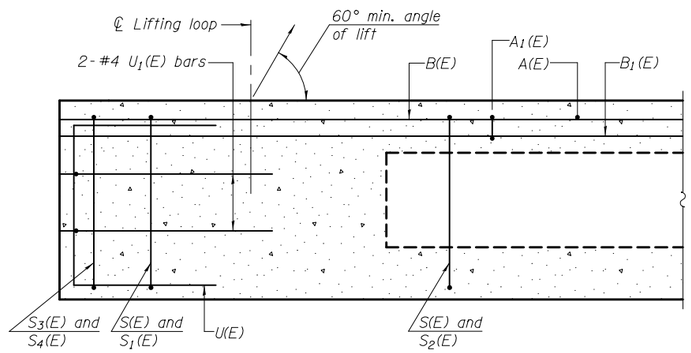

SECTION A-A

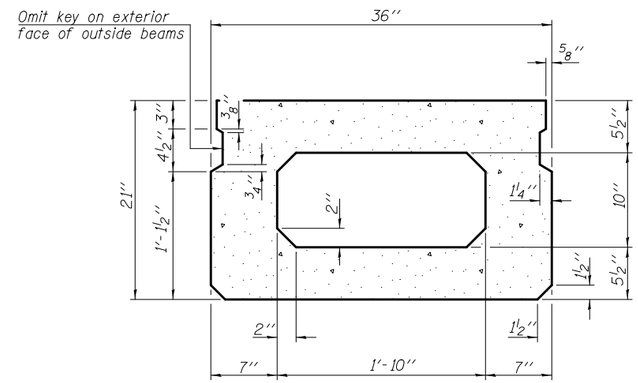

SECTION B-B
(Showing dimensions)

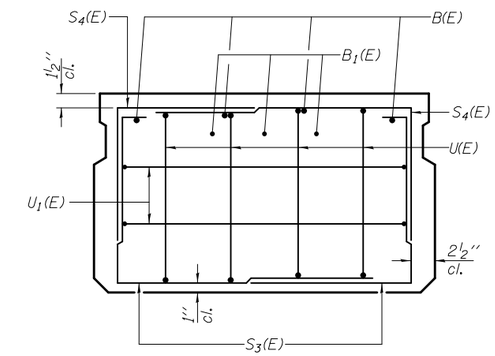

VIEW C-C

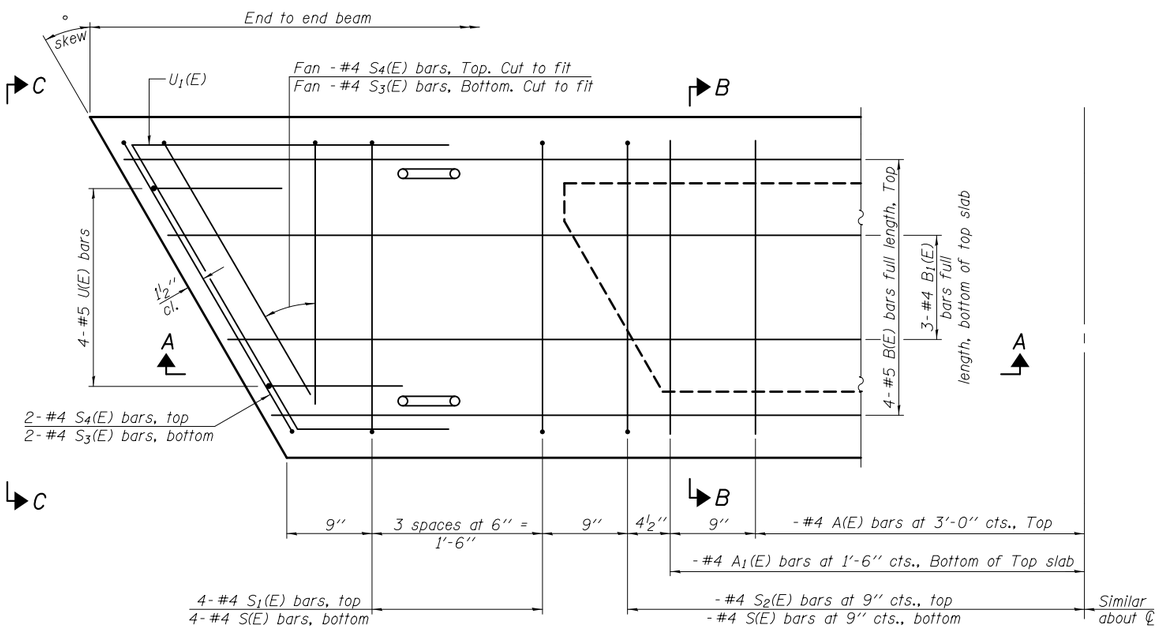

PLAN VIEW

Note: Spacing of S(E) and S_2(E) bars may be adjusted up to 4'' in the immediate area of the transverse tie diaphragms to miss the block outs for the transverse ties.

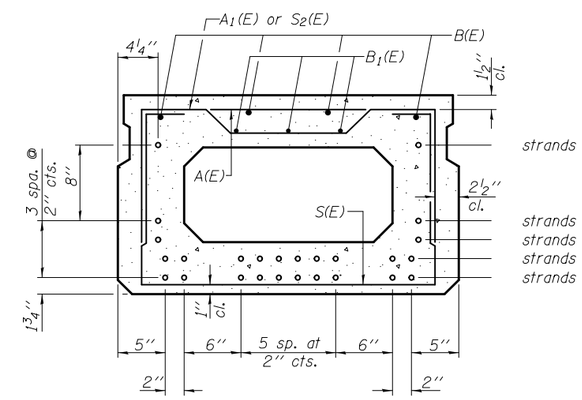

SECTION B-B
(Showing reinforcement and permissible strand locations)

Note: Place the number of strands specified in each row symmetrically about the centerline of beam in the permissible strand locations shown.

BAR LIST
ONE BEAM ONLY
(For information only)

Bar	No.	Size	Length	Shape
A(E)		#4	2'-7''	
A_1(E)		#4	2'-10''	
B(E)		#5		
B_1(E)		#4		
S(E)		#4	6'-5''	
S_1(E)	8	#4	4'-11''	
S_2(E)		#4	5'-2''	
S_3(E)		#4		
S_4(E)		#4		
U(E)	8	#5	4'-0''	
U_1(E)	4	#4		

Note: See sheet of for additional details and Bill of Material.

MINIMUM BAR LAP
#4 bar = 1'-11''
#5 bar = 2'-6''

PD-2136-R 06-01-16

FILE NAME =	USER NAME =	DESIGNED -	REVISED -	STATE OF ILLINOIS DEPARTMENT OF TRANSPORTATION	21'' x 36'' PPC DECK BEAM STRUCTURE NO.	F.A. RTE.	SECTION	COUNTY	TOTAL SHEETS	SHEET NO.
		CHECKED -	REVISED -							
	PLOT SCALE =	DRAWN -	REVISED -			CONTRACT NO.				
	PLOT DATE =	CHECKED -	REVISED -			ILLINOIS FED. AID PROJECT				

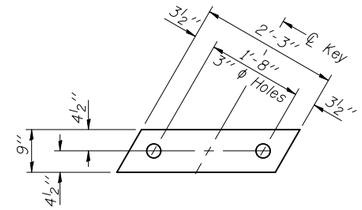

FABRIC BEARING PAD
(Interior)

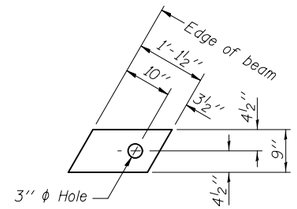

FABRIC BEARING PAD
(Exterior)

FIXED

Notes:
All bearing pads shall be 1'' thick.
Omit holes when using expansion bearings.
Expansion bearing pad shall be bonded to the substructure.

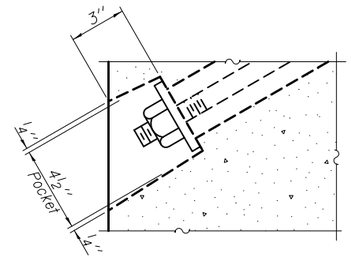

SECTION A-A

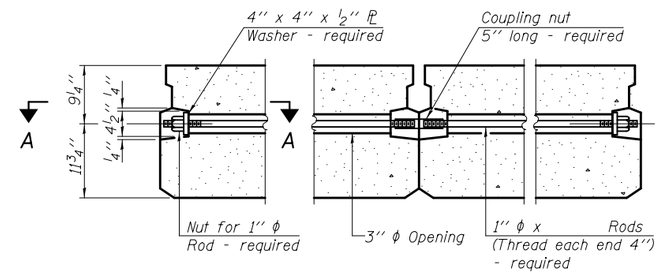

TYPICAL TRANSVERSE TIE ASSEMBLY

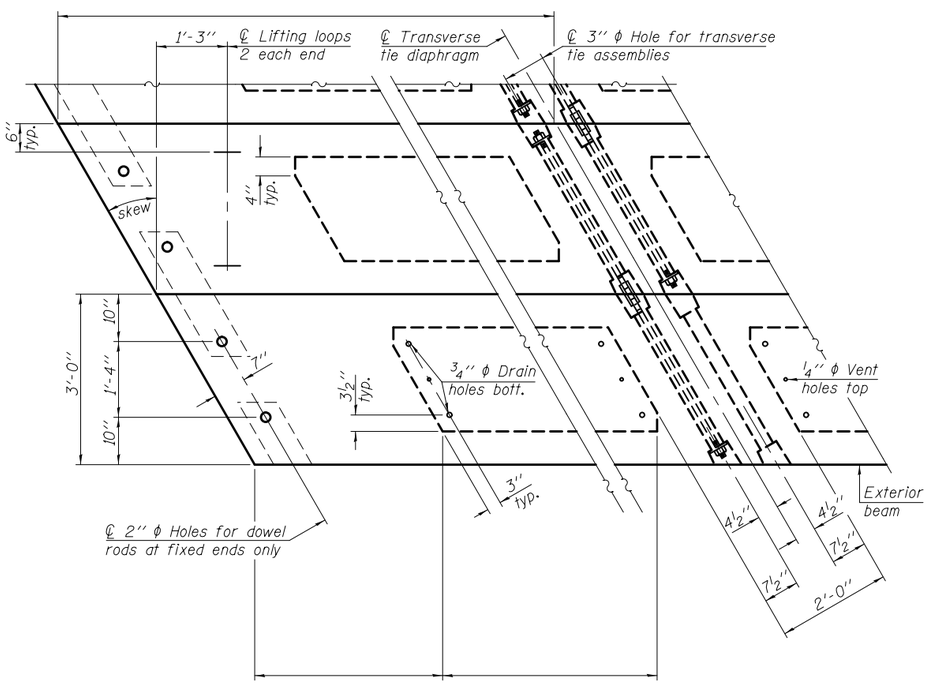

PLAN VIEW

Note: Connect beams in pairs with the transverse tie configuration shown.

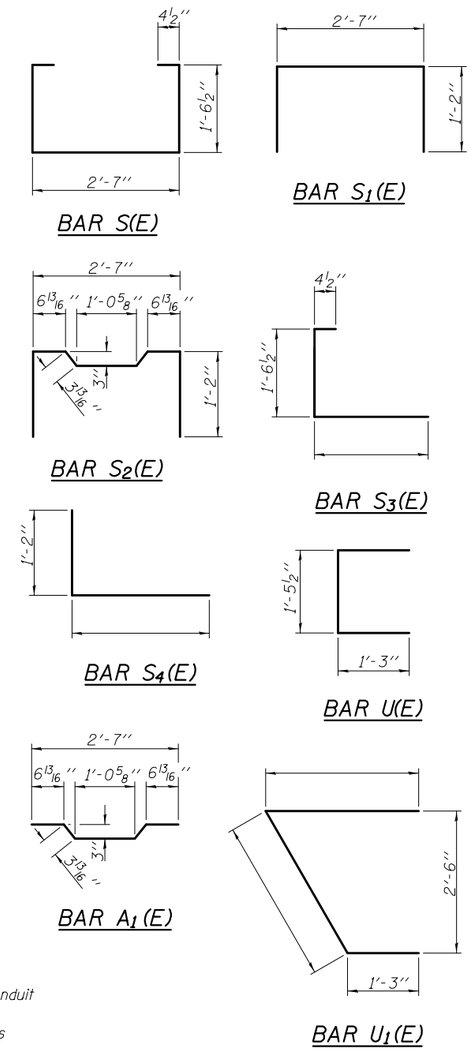

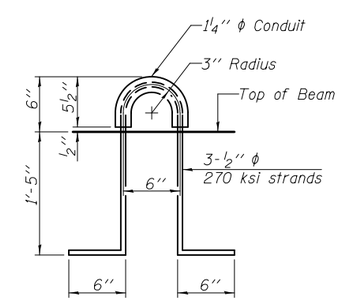

LIFTING LOOP DETAIL

NOTES

Prestressing steel shall be uncoated high strength, low relaxation 7-wire strand, Grade 270. The nominal diameter shall be ½'' and the nominal cross-sectional area shall be 0.153 sq. in.

The 1'' ϕ rods in the transverse tie assembly shall be tightened to a snug fit and the threads set. Pockets on exterior faces of bridge shall be filled with grout after transverse tie assembly is in place.

Two ⅛'' fabric adjusting shims of the dimensions of the exterior bearing pad shall be provided for each bearing pad location.

A minimum 2½'' ϕ lifting pin shall be used to engage the lifting loops during handling.

Corrosion Inhibitor, per Article 1020.05(b)(10) and 1021.07 of the Standard Specifications, shall be used in the concrete for precast prestressed concrete deck beams.

Compressive strength of prestressed concrete, f'c, shall be 6000 psi.

Compressive strength of prestressed concrete at release, f'ci, shall be 5000 psi.

BILL OF MATERIAL

Precast Prestressed Conc. Deck Bms. (21'' depth)	Sq. Ft.	

PD-2136-RD 1-28-16

FILE NAME =	USER NAME =	DESIGNED -	REVISED -	STATE OF ILLINOIS DEPARTMENT OF TRANSPORTATION	21'' x 36'' PPC DECK BEAM DETAILS STRUCTURE NO.	F.A. RTE.	SECTION	COUNTY / TOTAL SHEETS / SHEET NO.
		CHECKED -	REVISED -					
	PLOT SCALE =	DRAWN -	REVISED -					CONTRACT NO.
	PLOT DATE =	CHECKED -	REVISED -					ILLINOIS FED. AID PROJECT

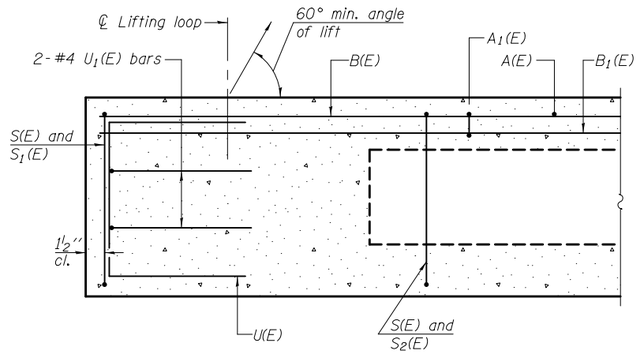

SECTION A-A

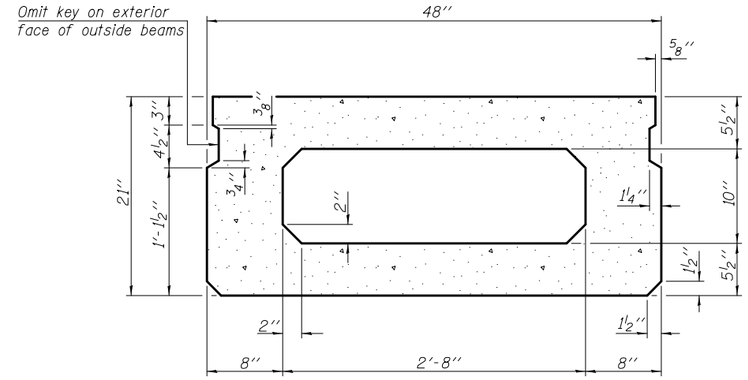

SECTION B-B
(Showing dimensions)

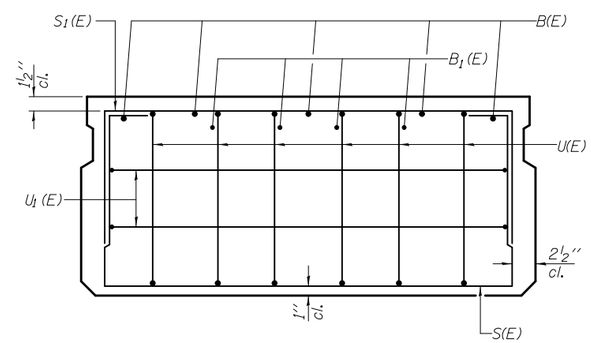

VIEW C-C

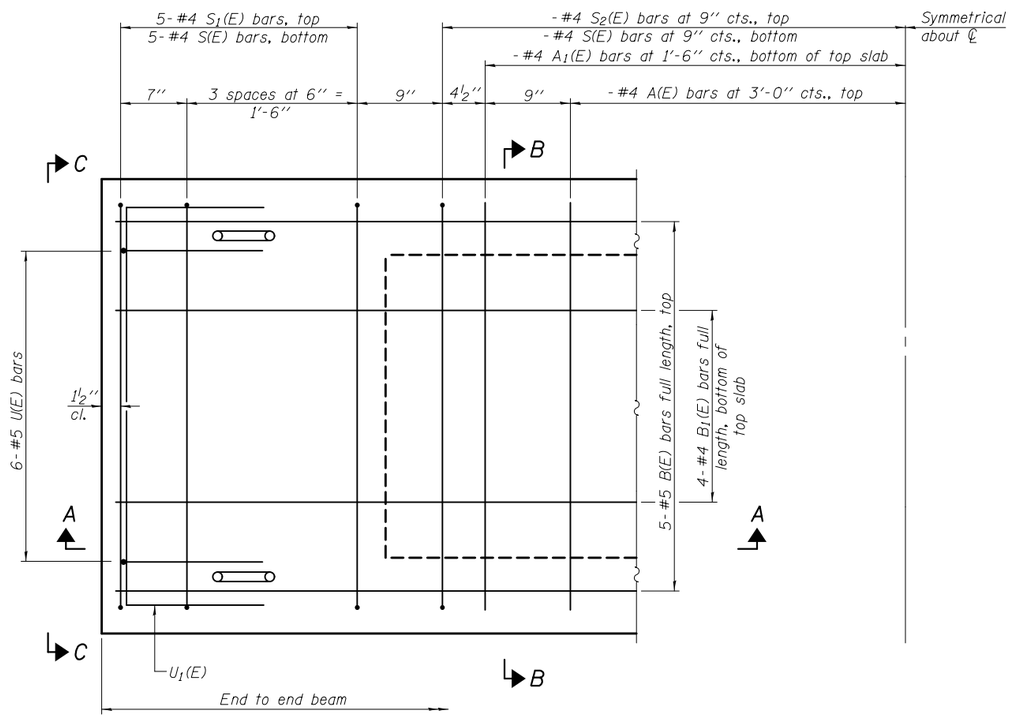

PLAN VIEW

Note: Spacing of S(E) and S2(E) bars may be adjusted up to 4" in the immediate area of the transverse tie diaphragms to miss the block outs for the transverse ties.

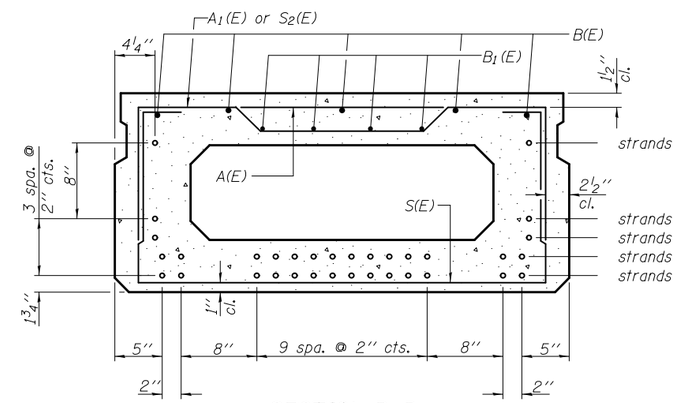

SECTION B-B
(Showing reinforcement and permissible strand locations)

Note: Place the number of strands specified in each row symmetrically about the centerline of beam in the permissible strand locations shown.

BAR LIST
ONE BEAM ONLY
(For Information Only)

Bar	No.	Size	Length	Shape
A(E)		#4	3'-7"	—
A1(E)		#4	3'-10"	
B(E)		#5		—
B1(E)		#4		—
S(E)		#4	7'-5"	
S1(E)	10	#4	5'-11"	
S2(E)		#4	6'-2"	
U(E)	12	#5	4'-0"	
U1(E)	4	#4	6'-0"	

Note: See sheet of for additional details and Bill of Material.

MINIMUM BAR LAP
#4 bar = 1'-11"
#5 bar = 2'-6"

PD-2148-0 06-01-16

FILE NAME =	USER NAME =	DESIGNED -	REVISED -
		CHECKED -	REVISED -
	PLOT SCALE =	DRAWN -	REVISED -
	PLOT DATE =	CHECKED -	REVISED -

STATE OF ILLINOIS
DEPARTMENT OF TRANSPORTATION

21" x 48" PPC DECK BEAM
STRUCTURE NO.

F.A. RTE.	SECTION	COUNTY	TOTAL SHEETS	SHEET NO.

CONTRACT NO.
ILLINOIS FED. AID PROJECT

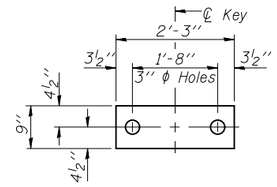

FABRIC BEARING PAD
(Interior)

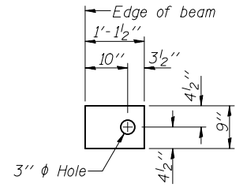

FABRIC BEARING PAD
(Exterior)

FIXED

Notes:
All bearing pads shall be 1" thick.
Omit holes when using expansion bearings.
Expansion bearing pad shall be bonded to the substructure.

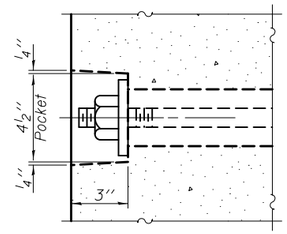

SECTION A-A

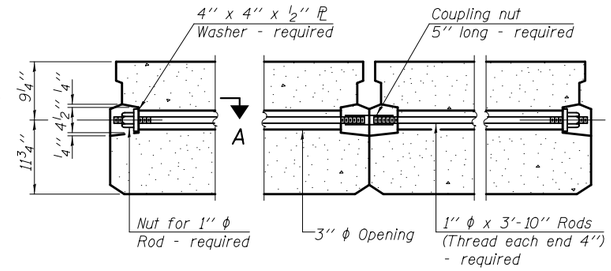

TYPICAL TRANSVERSE TIE ASSEMBLY

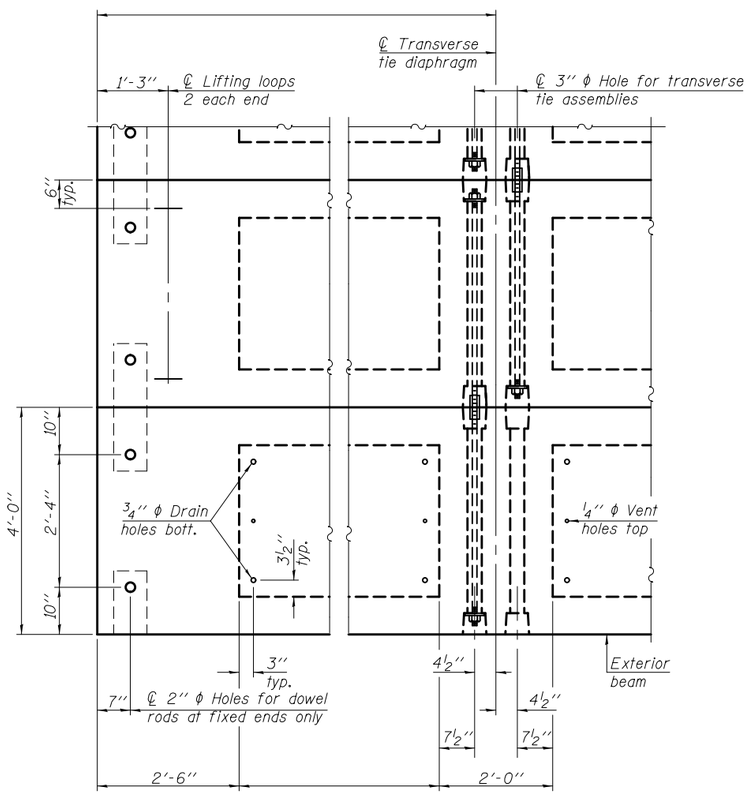

PLAN VIEW

Note: Connect beams in pairs with the transverse tie configuration shown.

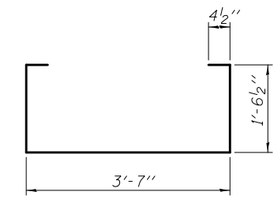

BAR S(E)

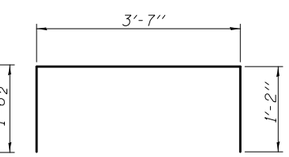

BAR S_1(E)

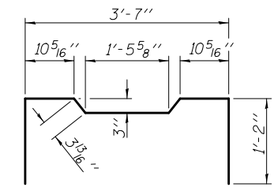

BAR S_2(E)

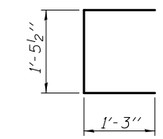

BAR U(E)

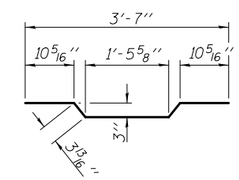

BAR A_1(E)

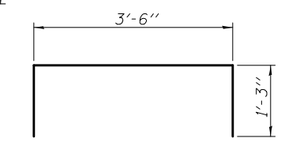

BAR U_1(E)

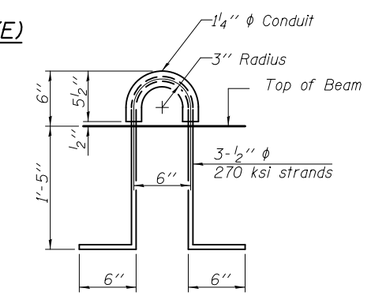

LIFTING LOOP DETAIL

NOTES

Prestressing steel shall be uncoated high strength, low relaxation 7-wire strand, Grade 270. The nominal diameter shall be ½" and the nominal cross-sectional area shall be 0.153 sq. in.

The 1" ϕ rods in the transverse tie assembly shall be tightened to a snug fit and the threads set. Pockets on exterior faces of bridge shall be filled with grout after transverse tie assembly is in place.

Two ⅛" fabric adjusting shims of the dimensions of the exterior bearing pad shall be provided for each bearing pad location.

A minimum 2½" ϕ lifting pin shall be used to engage the lifting loops during handling.

Corrosion Inhibitor, per Article 1020.05(b)(10) and 1021.07 of the Standard Specifications, shall be used in the concrete for precast prestressed concrete deck beams.

Compressive strength of prestressed concrete, f'c, shall be 6000 psi.

Compressive strength of prestressed concrete at release, f'ci, shall be 5000 psi.

BILL OF MATERIAL

Precast Prestressed Conc. Deck Bms. (21" depth)	Sq. Ft.	

PD-2148-0D 1-28-16

FILE NAME =	USER NAME =	DESIGNED -	REVISED -	STATE OF ILLINOIS DEPARTMENT OF TRANSPORTATION	21" x 48" PPC DECK BEAM DETAILS STRUCTURE NO.	F.A. RTE.	SECTION	COUNTY	TOTAL SHEETS	SHEET NO.
		CHECKED -	REVISED -							
	PLOT SCALE =	DRAWN -	REVISED -			CONTRACT NO.				
	PLOT DATE =	CHECKED -	REVISED -			ILLINOIS FED. AID PROJECT				

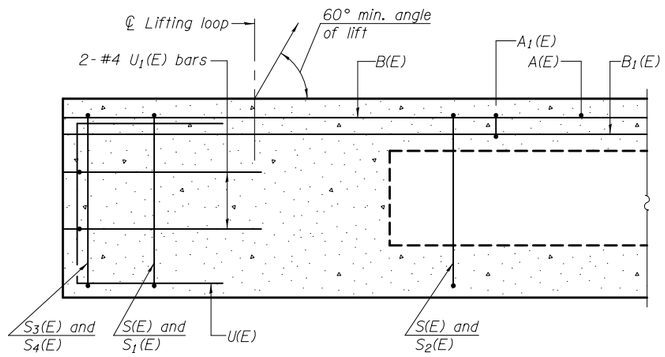

SECTION A-A

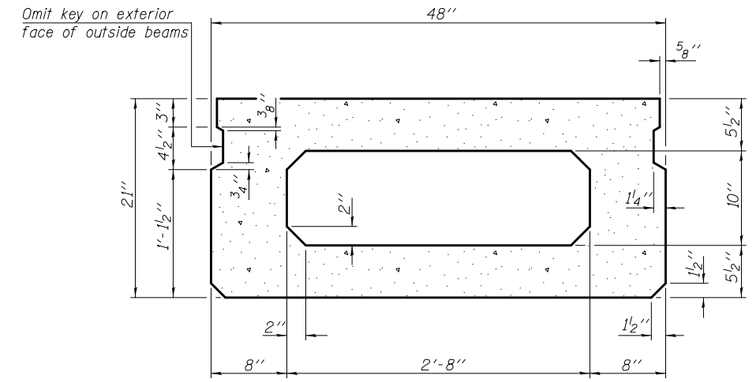

SECTION B-B
(Showing dimensions)

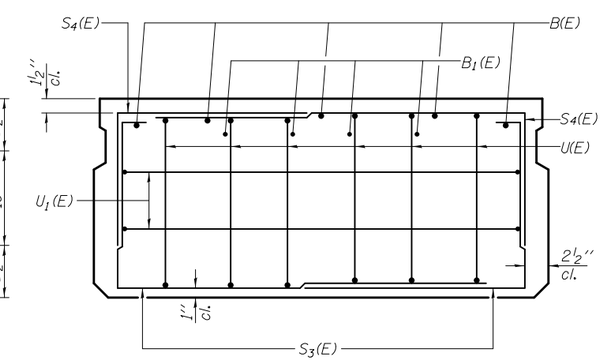

VIEW C-C

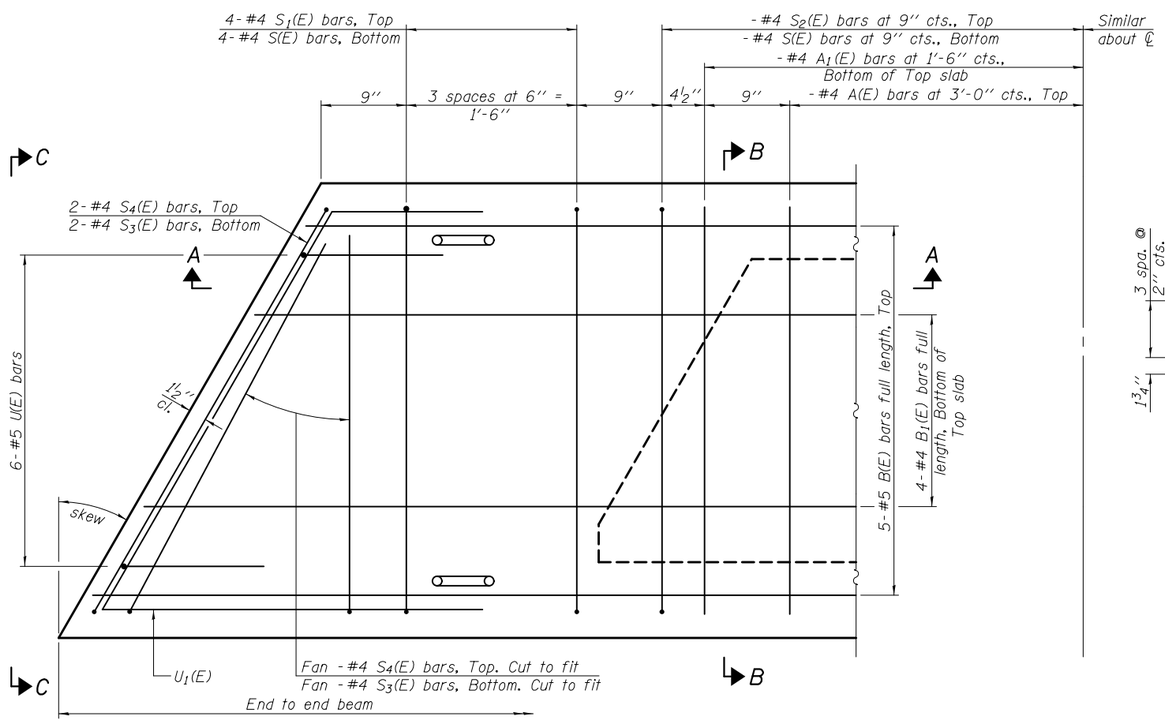

PLAN VIEW

Note: Spacing of S(E) and S2(E) bars may be adjusted up to 4″ in the immediate area of the transverse tie diaphragms to miss the block outs for the transverse ties.

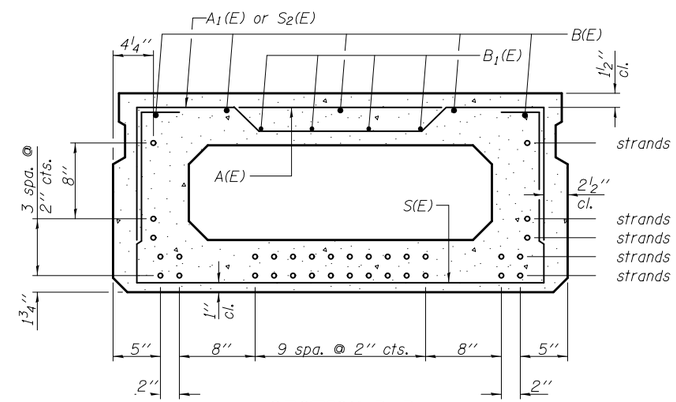

SECTION B-B
(Showing reinforcement and permissible strand locations)

Note: Place the number of strands specified in each row symmetrically about the centerline of beam in the permissible strand locations shown.

BAR LIST
ONE BEAM ONLY
(For information only)

Bar	No.	Size	Length	Shape
A(E)		#4	3′-7″	
A1(E)		#4	3′-10″	
B(E)		#5		
B1(E)		#4		
S(E)		#4	7′-5″	
S1(E)	8	#4	5′-11″	
S2(E)		#4	6′-2″	
S3(E)		#4		
S4(E)		#4		
U(E)	12	#5	4′-0″	
U1(E)	4	#4		

Note: See sheet of for additional details and Bill of Material.

MINIMUM BAR LAP
#4 bar = 1′-11″
#5 bar = 2′-6″

PD-2148-L 06-01-16

FILE NAME =	USER NAME =	DESIGNED -	REVISED -	STATE OF ILLINOIS DEPARTMENT OF TRANSPORTATION	21″ x 48″ PPC DECK BEAM STRUCTURE NO.	F.A. RTE.	SECTION	COUNTY	TOTAL SHEETS	SHEET NO.
		CHECKED -	REVISED -							
	PLOT SCALE =	DRAWN -	REVISED -			CONTRACT NO.				
	PLOT DATE =	CHECKED -	REVISED -			ILLINOIS	FED. AID PROJECT			

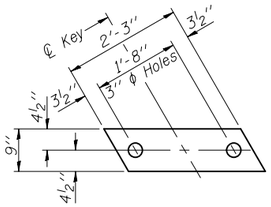

FABRIC BEARING PAD
(Interior)

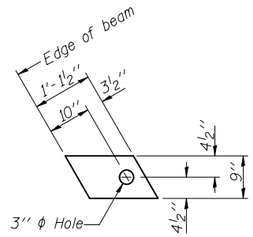

FABRIC BEARING PAD
(Exterior)

FIXED

Notes:
All bearing pads shall be 1" thick.
Omit holes when using expansion bearings.
Expansion bearing pad shall be bonded to the substructure.

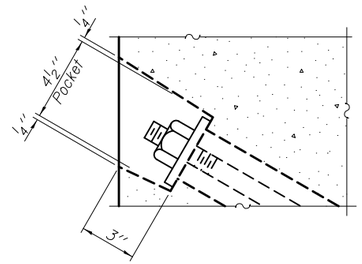

SECTION A-A

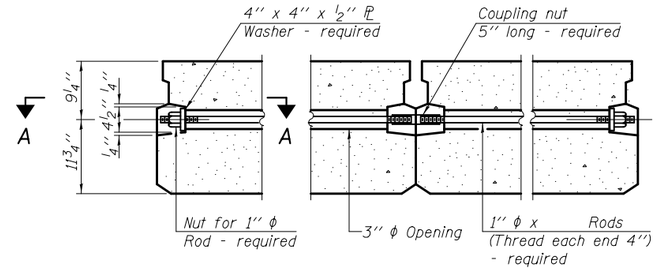

TYPICAL TRANSVERSE TIE ASSEMBLY

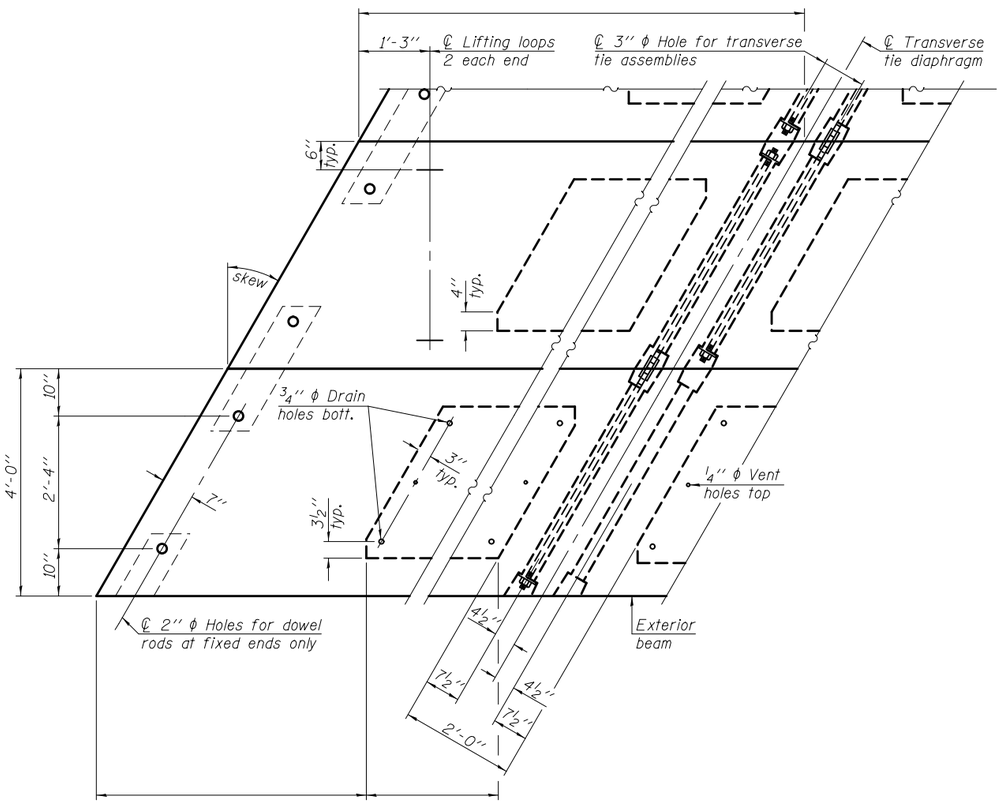

PLAN VIEW

Note: Connect beams in pairs with the transverse tie configuration shown.

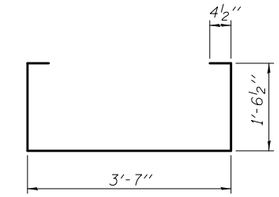

BAR S(E)

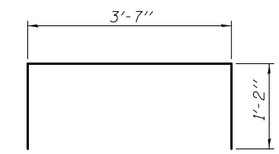

BAR S_1(E)

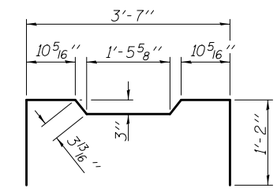

BAR S_2(E)

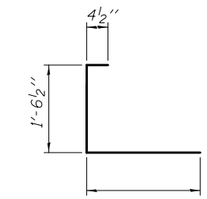

BAR S_3(E)

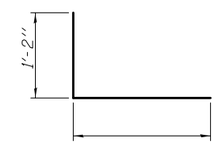

BAR S_4(E)

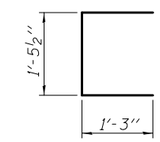

BAR U(E)

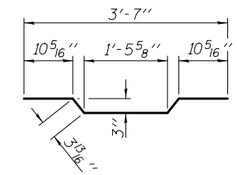

BAR A_1(E)

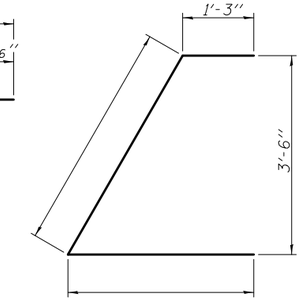

BAR U_1(E)

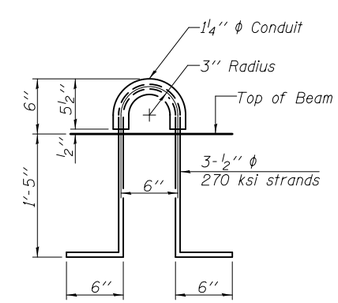

LIFTING LOOP DETAIL

NOTES

Prestressing steel shall be uncoated high strength, low relaxation 7-wire strand, Grade 270. The nominal diameter shall be ½" and the nominal cross-sectional area shall be 0.153 sq. in.

The 1" ϕ rods in the transverse tie assembly shall be tightened to a snug fit and the threads set. Pockets on exterior faces of bridge shall be filled with grout after transverse tie assembly is in place.

Two ⅛" fabric adjusting shims of the dimensions of the exterior bearing pad shall be provided for each bearing pad location.

A minimum 2½" ϕ lifting pin shall be used to engage the lifting loops during handling.

Corrosion Inhibitor, per Article 1020.05(b)(10) and 1021.07 of the Standard Specifications, shall be used in the concrete for precast prestressed concrete deck beams.

Compressive strength of prestressed concrete, f'c, shall be 6000 psi.

Compressive strength of prestressed concrete at release, f'ci, shall be 5000 psi.

BILL OF MATERIAL

Precast Prestressed Conc. Deck Bms. (21" depth)	Sq. Ft.	

PD-2148-LD 1-28-16

FILE NAME =	USER NAME =	DESIGNED -	REVISED -
		CHECKED -	REVISED -
	PLOT SCALE =	DRAWN -	REVISED -
	PLOT DATE =	CHECKED -	REVISED -

STATE OF ILLINOIS
DEPARTMENT OF TRANSPORTATION

21" x 48" PPC DECK BEAM DETAILS
STRUCTURE NO.

F.A. RTE.	SECTION	COUNTY	TOTAL SHEETS	SHEET NO.
		CONTRACT NO.		
	ILLINOIS	FED. AID PROJECT		

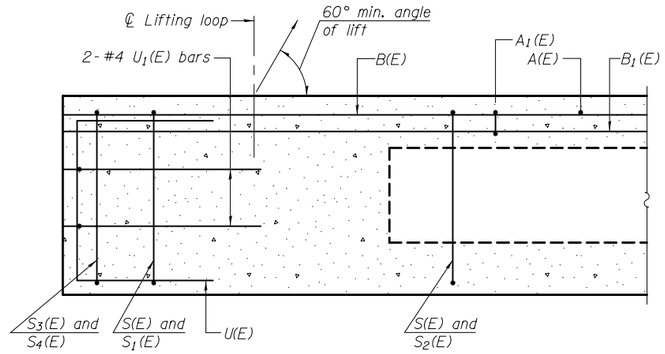

SECTION A-A

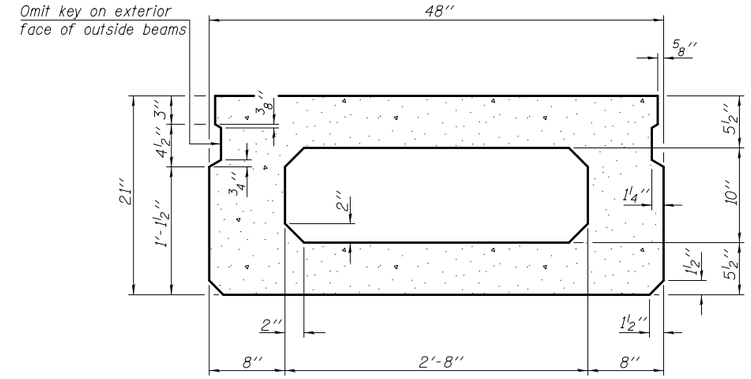

SECTION B-B
(Showing dimensions)

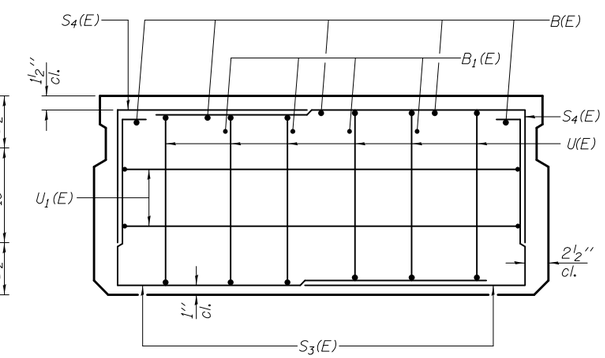

VIEW C-C

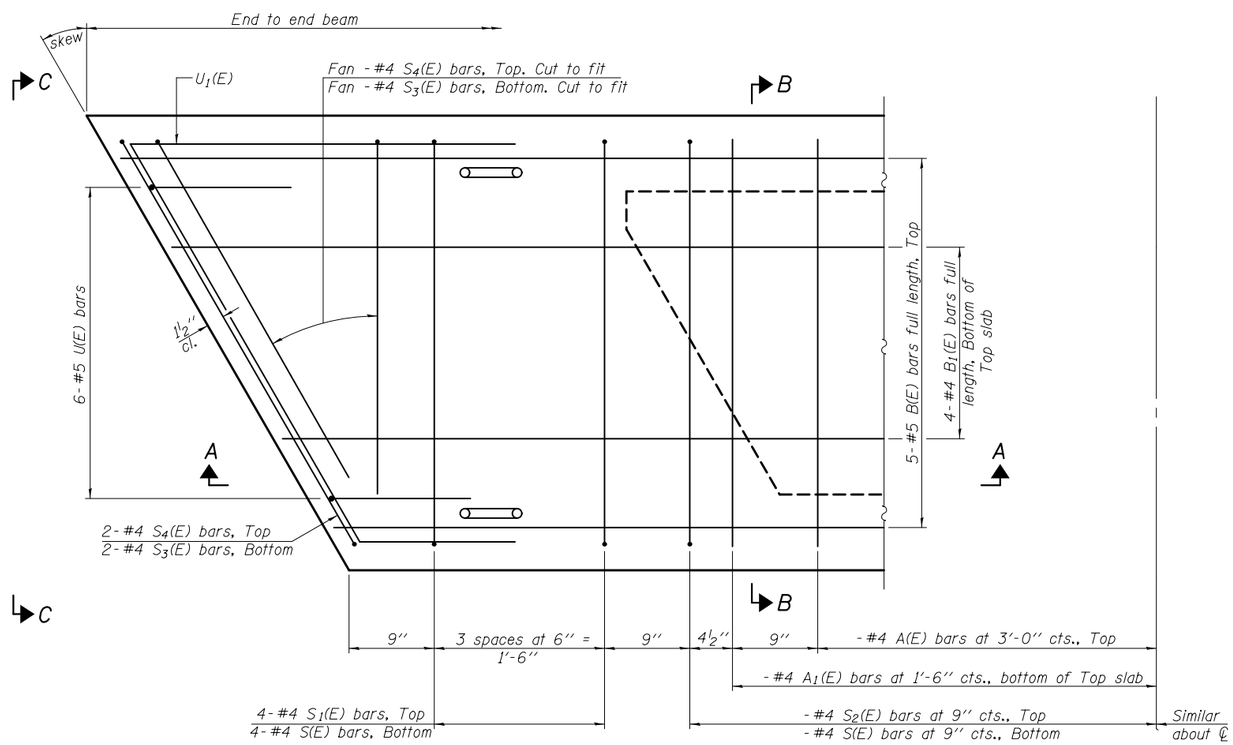

PLAN VIEW

Note: Spacing of S(E) and S_2(E) bars may be adjusted up to 4" in the immediate area of the transverse tie diaphragms to miss the block outs for the transverse ties.

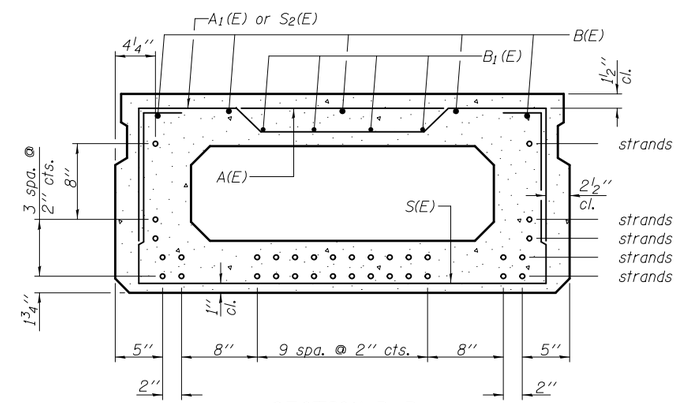

SECTION B-B
(Showing reinforcement and permissible strand locations)

Note: Place the number of strands specified in each row symmetrically about the centerline of beam in the permissible strand locations shown.

BAR LIST
ONE BEAM ONLY
(For information only)

Bar	No.	Size	Length	Shape
A(E)		#4	3'-7"	
A_1(E)		#4	3'-10"	
B(E)		#5		
B_1(E)		#4		
S(E)		#4	7'-5"	
S_1(E)	8	#4	5'-11"	
S_2(E)		#4	6'-2"	
S_3(E)		#4		
S_4(E)		#4		
U(E)	12	#5	4'-0"	
U_1(E)	4	#4		

Note: See sheet of for additional details and Bill of Material.

MINIMUM BAR LAP
#4 bar = 1'-11"
#5 bar = 2'-6"

PD-2148-R 06-01-16

FILE NAME =	USER NAME =	DESIGNED -	REVISED -	STATE OF ILLINOIS DEPARTMENT OF TRANSPORTATION	21" x 48" PPC DECK BEAM STRUCTURE NO.	F.A. RTE.	SECTION	COUNTY	TOTAL SHEETS	SHEET NO.
		CHECKED -	REVISED -							
	PLOT SCALE =	DRAWN -	REVISED -					CONTRACT NO.		
	PLOT DATE =	CHECKED -	REVISED -				ILLINOIS	FED. AID PROJECT		

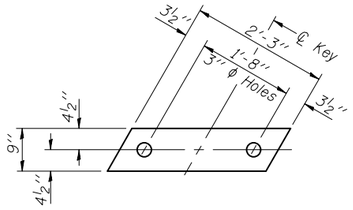

FABRIC BEARING PAD
(Interior)

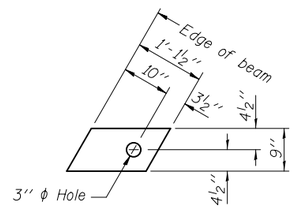

FABRIC BEARING PAD
(Exterior)

FIXED

Notes:
All bearing pads shall be 1'' thick.
Omit holes when using expansion bearings.
Expansion bearing pad shall be bonded to the substructure.

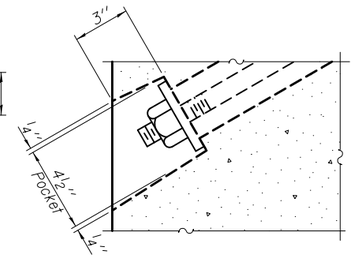

SECTION A-A

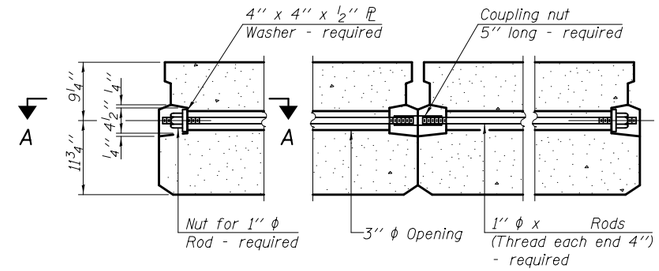

TYPICAL TRANSVERSE TIE ASSEMBLY

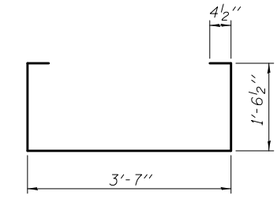

BAR S(E)

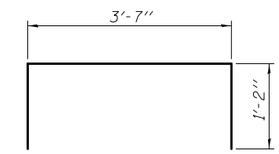

BAR S1(E)

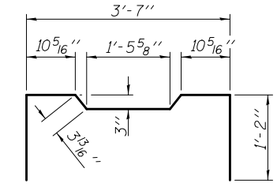

BAR S2(E)

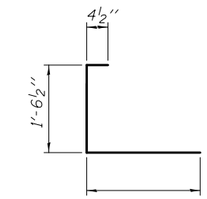

BAR S3(E)

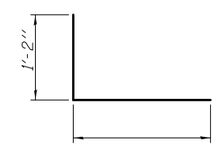

BAR S4(E)

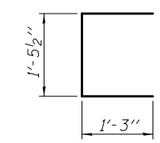

BAR U(E)

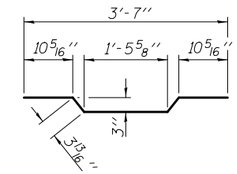

BAR A1(E)

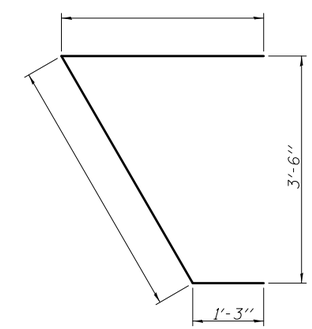

BAR U1(E)

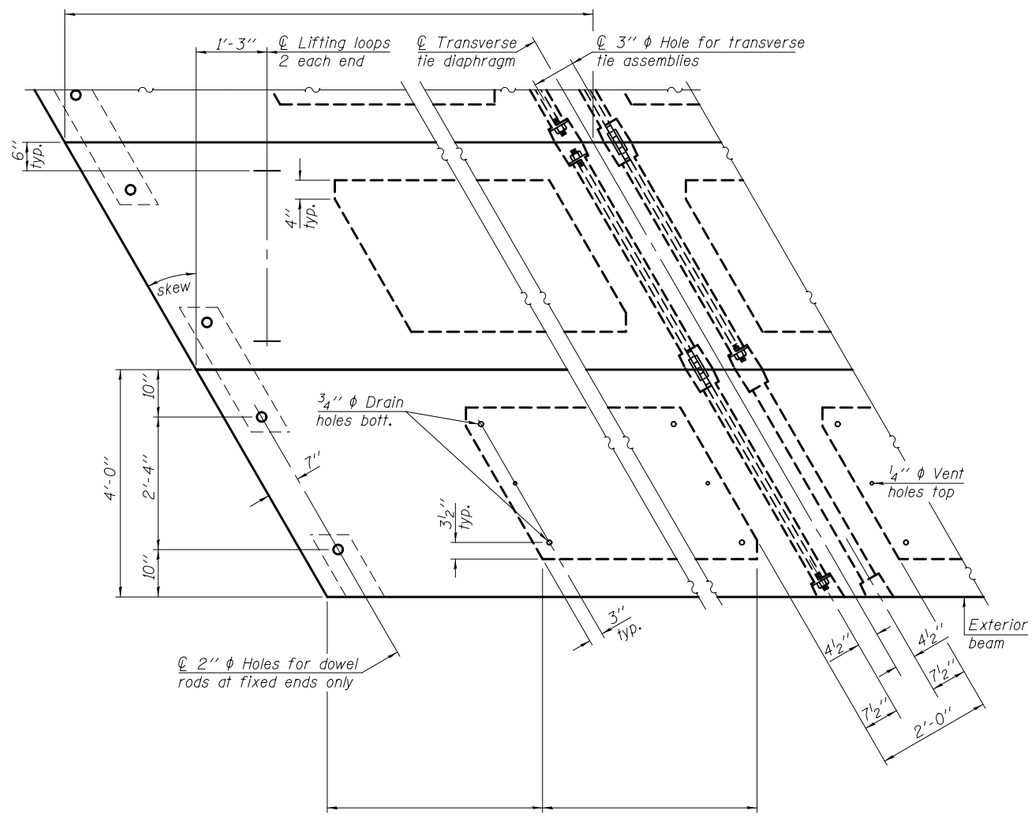

PLAN VIEW

Note: Connect beams in pairs with the transverse tie configuration shown.

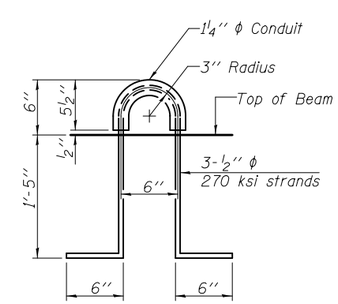

LIFTING LOOP DETAIL

NOTES

Prestressing steel shall be uncoated high strength, low relaxation 7-wire strand, Grade 270. The nominal diameter shall be ½'' and the nominal cross-sectional area shall be 0.153 sq. in.

The 1'' ϕ rods in the transverse tie assembly shall be tightened to a snug fit and the threads set. Pockets on exterior faces of bridge shall be filled with grout after transverse tie assembly is in place.

Two ⅛'' fabric adjusting shims of the dimensions of the exterior bearing pad shall be provided for each bearing pad location.

A minimum 2½'' ϕ lifting pin shall be used to engage the lifting loops during handling.

Corrosion Inhibitor, per Article 1020.05(b)(10) and 1021.07 of the Standard Specifications, shall be used in the concrete for precast prestressed concrete deck beams.

Compressive strength of prestressed concrete, f'c, shall be 6000 psi.

Compressive strength of prestressed concrete at release, f'ci, shall be 5000 psi.

BILL OF MATERIAL

Precast Prestressed Conc. Deck Bms. (21'' depth)	Sq. Ft.	

PD-2148-RD 06-01-16

FILE NAME =	USER NAME =	DESIGNED -	REVISED -
		CHECKED -	REVISED -
	PLOT SCALE =	DRAWN -	REVISED -
	PLOT DATE =	CHECKED -	REVISED -

STATE OF ILLINOIS
DEPARTMENT OF TRANSPORTATION

21'' x 48'' PPC DECK BEAM DETAILS
STRUCTURE NO.

F.A. RTE.	SECTION	COUNTY	TOTAL SHEETS	SHEET NO.
		CONTRACT NO.		
	ILLINOIS	FED. AID PROJECT		

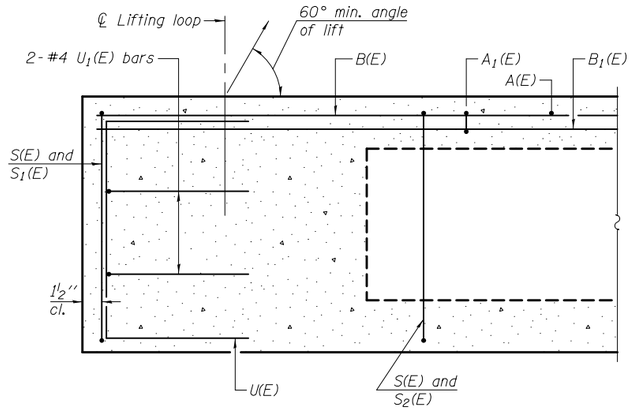

SECTION A-A

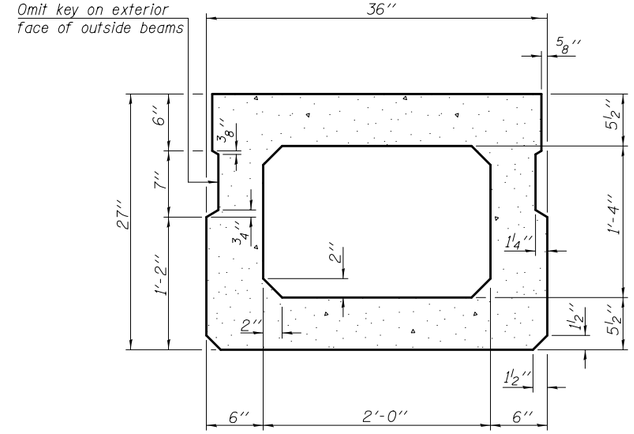

SECTION B-B
(Showing dimensions)

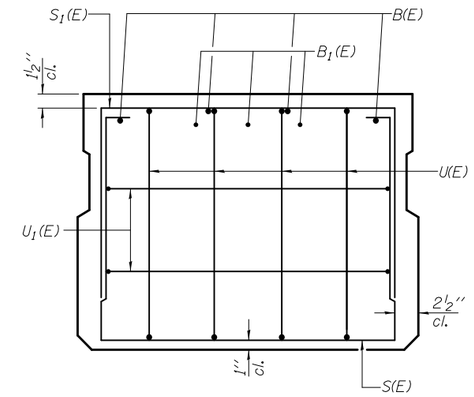

VIEW C-C

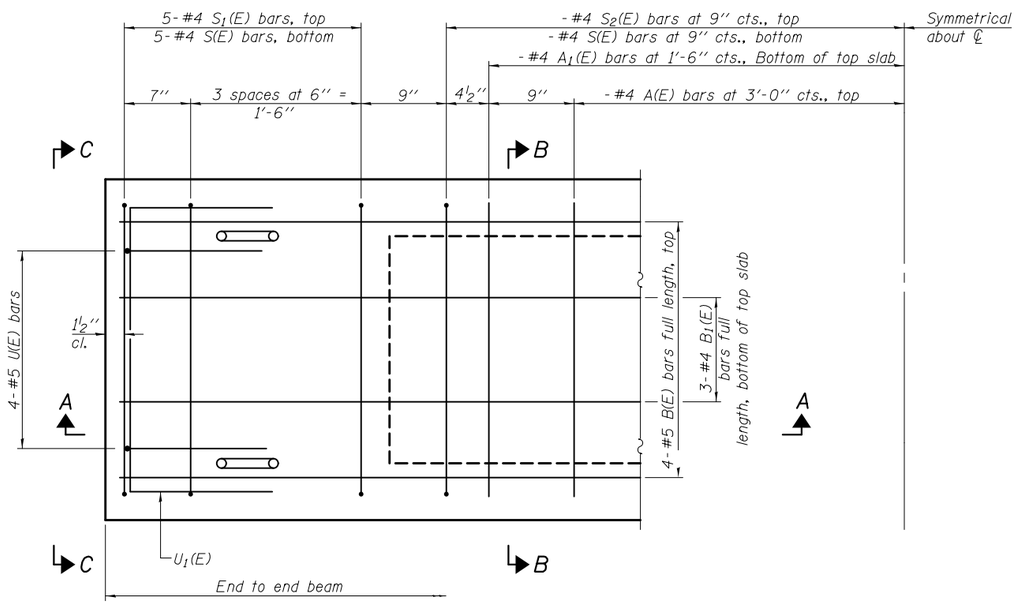

PLAN VIEW

Note: Spacing of S(E) and S2(E) bars may be adjusted up to 4" in the immediate area of the transverse tie diaphragms to miss the block outs for the transverse ties.

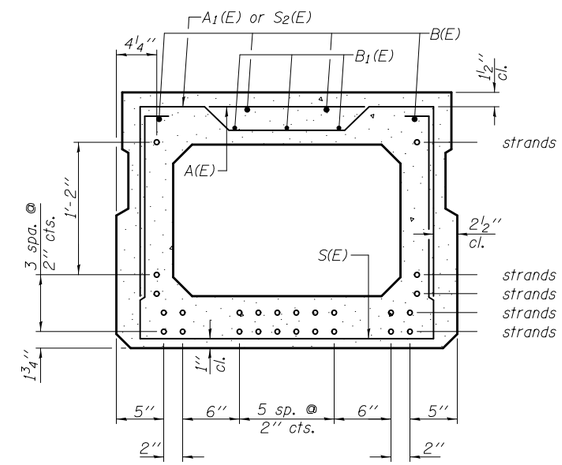

SECTION B-B
(Showing reinforcement and permissible strand locations)

Note: Place the number of strands specified in each row symmetrically about the centerline of beam in the permissible strand locations shown.

BAR LIST
ONE BEAM ONLY
(For information only)

Bar	No.	Size	Length	Shape
A(E)		#4	2'-7"	—
A1(E)		#4	2'-10"	⌣
B(E)		#5		—
B1(E)		#4		—
S(E)		#4	7'-5"	⊔
S1(E)	10	#4	5'-11"	⊓
S2(E)		#4	6'-2"	⊓
U(E)	8	#5	4'-6"	⊏
U1(E)	4	#4	5'-0"	⊓

Note: See sheet of for additional details and Bill of Material.

MINIMUM BAR LAP
#4 bar = 1'-11"
#5 bar = 2'-6"

PD-2736-0 06-01-16

FILE NAME =	USER NAME =	DESIGNED -	REVISED -	STATE OF ILLINOIS DEPARTMENT OF TRANSPORTATION	27" x 36" PPC DECK BEAM STRUCTURE NO.	F.A. RTE.	SECTION	COUNTY	TOTAL SHEETS	SHEET NO.
		CHECKED -	REVISED -							
	PLOT SCALE =	DRAWN -	REVISED -					CONTRACT NO.		
	PLOT DATE =	CHECKED -	REVISED -				ILLINOIS	FED. AID PROJECT		

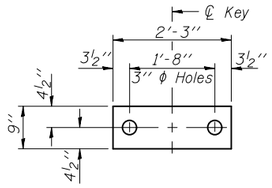

FABRIC BEARING PAD
(Interior)

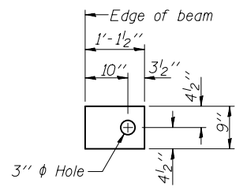

FABRIC BEARING PAD
(Exterior)

FIXED

Notes:
All bearing pads shall be 1" thick.
Omit holes when using expansion bearings.
Expansion bearing pad shall be bonded to the substructure.

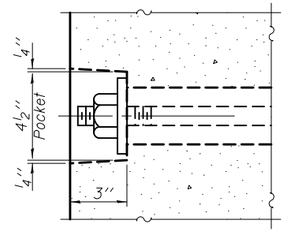

SECTION A-A

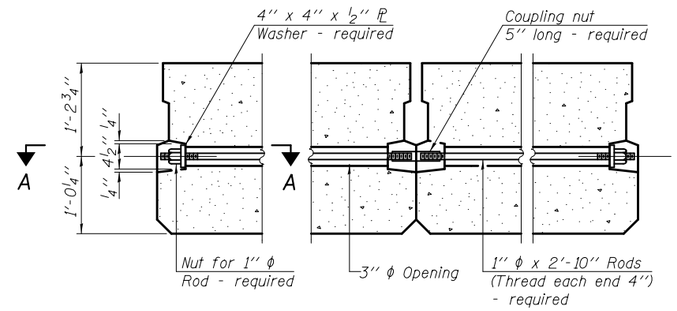

TYPICAL TRANSVERSE TIE ASSEMBLY

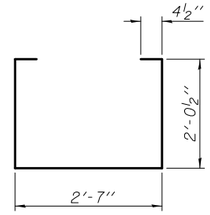

BAR S(E)

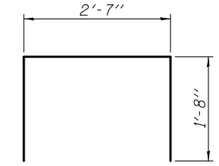

BAR S_1(E)

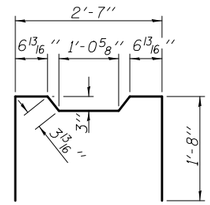

BAR S_2(E)

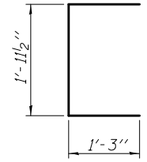

BAR U(E)

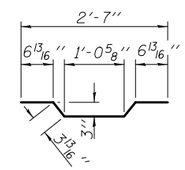

BAR A_1(E)

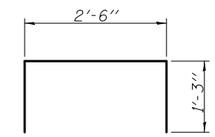

BAR U_1(E)

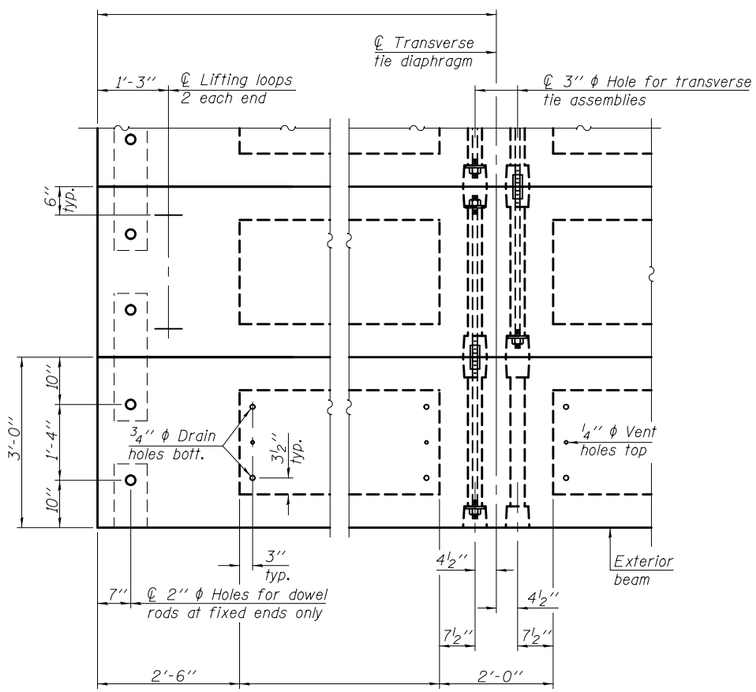

PLAN VIEW

Note: Connect beams in pairs with the transverse tie configuration shown.

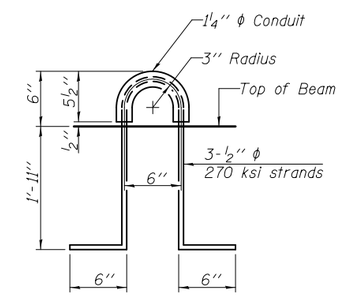

LIFTING LOOP DETAIL

NOTES

Prestressing steel shall be uncoated high strength, low relaxation 7-wire strand, Grade 270. The nominal diameter shall be ½" and the nominal cross-sectional area shall be 0.153 sq. in.

The 1" ϕ rods in the transverse tie assembly shall be tightened to a snug fit and the threads set. Pockets on exterior faces of bridge shall be filled with grout after transverse tie assembly is in place.

Two ⅛" fabric adjusting shims of the dimensions of the exterior bearing pad shall be provided for each bearing pad location.

A minimum 2½" ϕ lifting pin shall be used to engage the lifting loops during handling.

Corrosion Inhibitor, per Article 1020.05(b)(10) and 1021.07 of the Standard Specifications, shall be used in the concrete for precast prestressed concrete deck beams.

Compressive strength of prestressed concrete, f'c, shall be 6000 psi.

Compressive strength of prestressed concrete at release, f'ci, shall be 5000 psi.

BILL OF MATERIAL

Precast Prestressed Conc. Deck Bms. (27" depth)	Sq. Ft.	

PD-2736-0D 06-01-16

FILE NAME =	USER NAME =	DESIGNED -	REVISED -	STATE OF ILLINOIS DEPARTMENT OF TRANSPORTATION	27" x 36" PPC DECK BEAM DETAILS STRUCTURE NO.	F.A. RTE.	SECTION	COUNTY	TOTAL SHEETS / SHEET NO.
		CHECKED -	REVISED -						
	PLOT SCALE =	DRAWN -	REVISED -					CONTRACT NO.	
	PLOT DATE =	CHECKED -	REVISED -				ILLINOIS	FED. AID PROJECT	

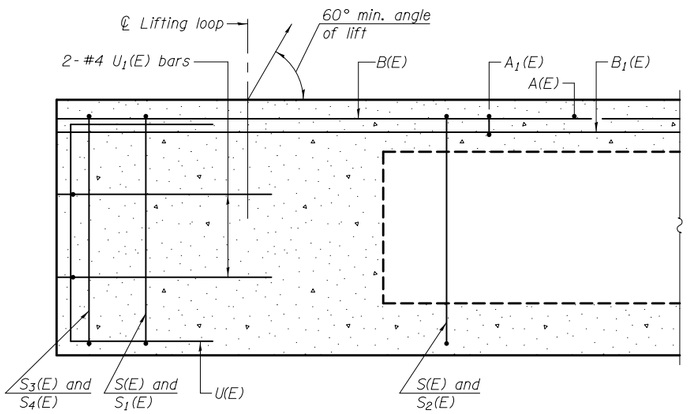

SECTION A-A

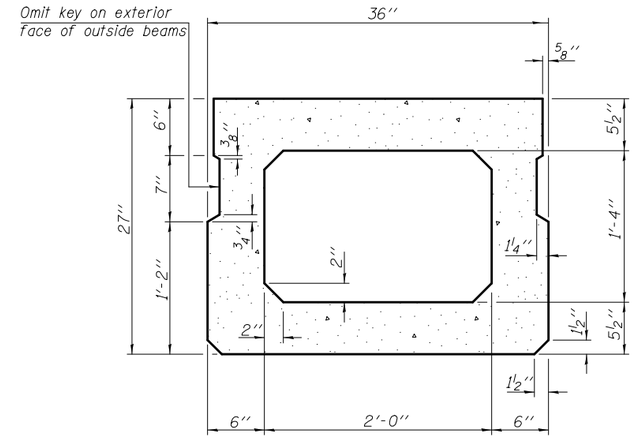

SECTION B-B

(Showing dimensions)

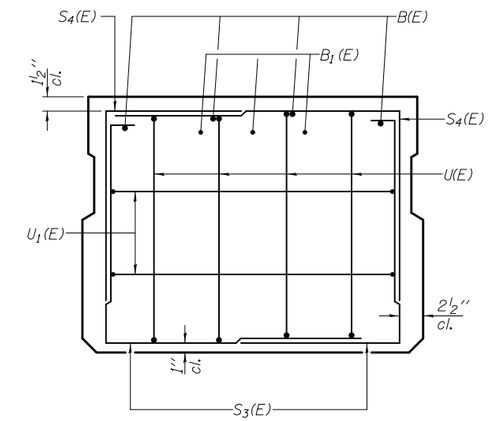

VIEW C-C

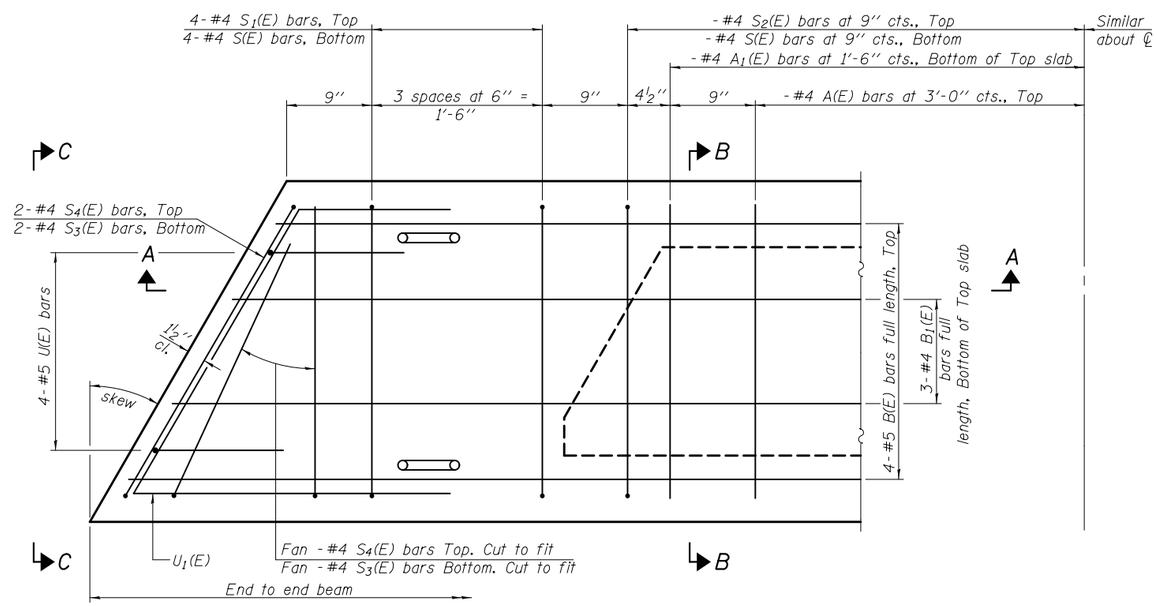

PLAN VIEW

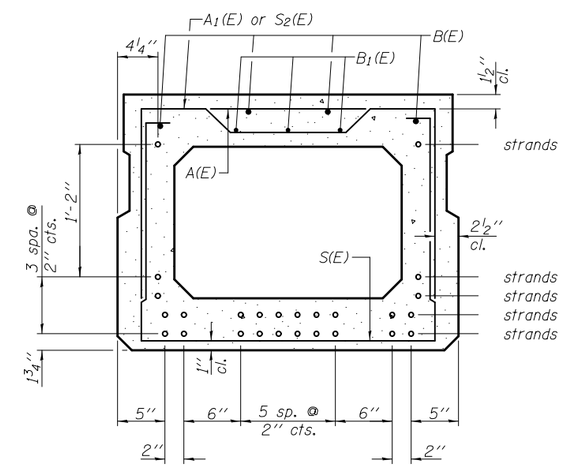

SECTION B-B

(Showing reinforcement and permissible strand locations)

Note: Place the number of strands specified in each row symmetrically about the centerline of beam in the permissible strand locations shown.

BAR LIST
ONE BEAM ONLY

(For information only)

Bar	No.	Size	Length	Shape
A(E)		#4	2'-7"	
A_1(E)		#4	2'-10"	
B(E)		#5		
B_1(E)		#4		
S(E)		#4	7'-5"	
S_1(E)	8	#4	5'-11"	
S_2(E)		#4	6'-2"	
S_3(E)		#4		
S_4(E)		#4		
U(E)	8	#5	4'-6"	
U_1(E)	4	#4		

Note: See sheet of for additional details and Bill of Material.

Note: Spacing of S(E) and S_2(E) bars may be adjusted up to 4" in the immediate area of the transverse tie diaphragms to miss the block outs for the transverse ties.

MINIMUM BAR LAP

#4 bar = 1'-11"
#5 bar = 2'-6"

PD-2736-L 06-01-16

FILE NAME =	USER NAME =	DESIGNED -	REVISED -	STATE OF ILLINOIS DEPARTMENT OF TRANSPORTATION	27" x 36" PPC DECK BEAM STRUCTURE NO.	F.A. RTE.	SECTION	COUNTY	TOTAL SHEETS	SHEET NO.
		CHECKED -	REVISED -							
	PLOT SCALE =	DRAWN -	REVISED -					CONTRACT NO.		
	PLOT DATE =	CHECKED -	REVISED -				ILLINOIS	FED. AID PROJECT		

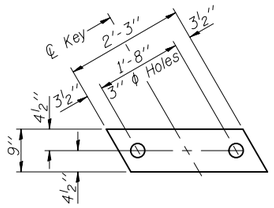

FABRIC BEARING PAD
(Interior)

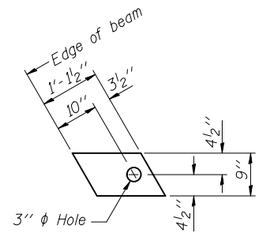

FABRIC BEARING PAD
(Exterior)

FIXED

Notes:
All bearing pads shall be 1" thick.
Omit holes when using expansion bearings.
Expansion bearing pad shall be bonded to the substructure.

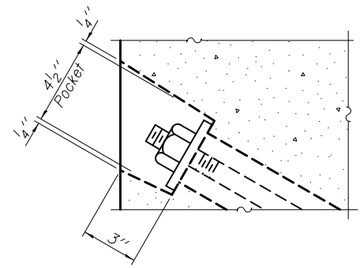

SECTION A-A

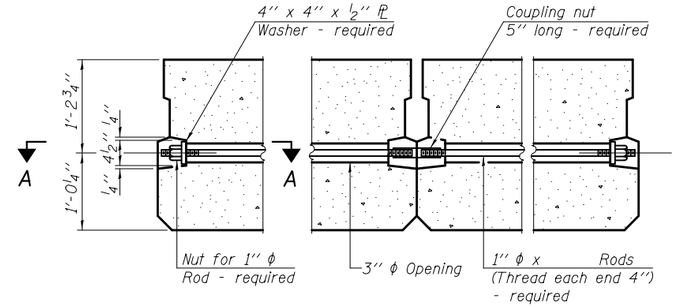

TYPICAL TRANSVERSE TIE ASSEMBLY

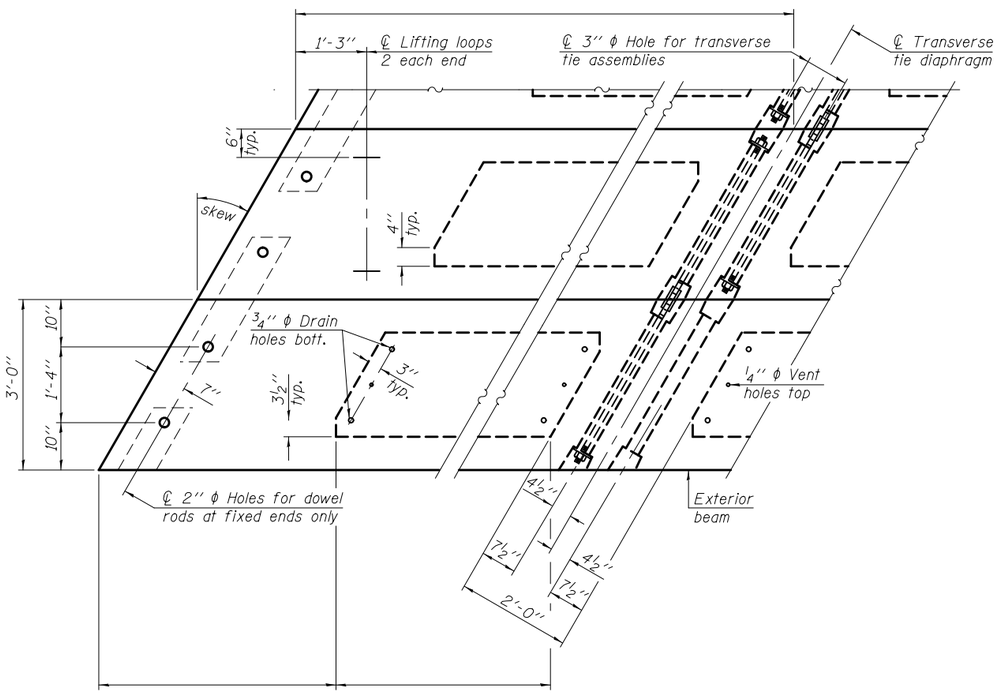

PLAN VIEW

Note: Connect beams in pairs with the transverse tie configuration shown.

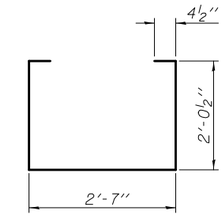

BAR S(E)

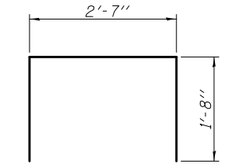

BAR S1(E)

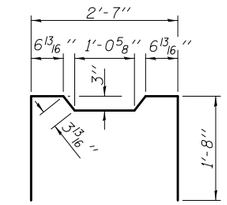

BAR S2(E)

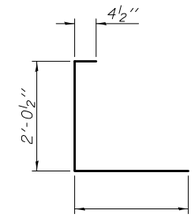

BAR S3(E)

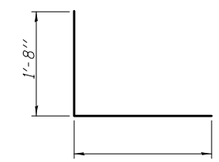

BAR S4(E)

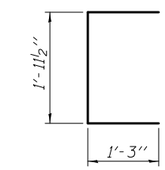

BAR U(E)

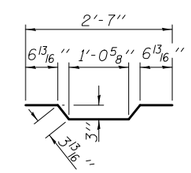

BAR A1(E)

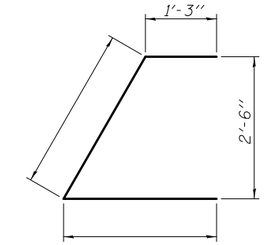

BAR U1(E)

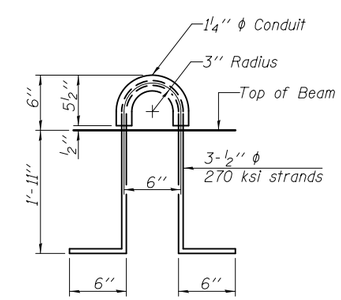

LIFTING LOOP DETAIL

NOTES

Prestressing steel shall be uncoated high strength, low relaxation 7-wire strand, Grade 270. The nominal diameter shall be ½" and the nominal cross-sectional area shall be 0.153 sq. in.

The 1" ϕ rods in the transverse tie assembly shall be tightened to a snug fit and the threads set. Pockets on exterior faces of bridge shall be filled with grout after transverse tie assembly is in place.

Two ⅛" fabric adjusting shims of the dimensions of the exterior bearing pad shall be provided for each bearing pad location.

A minimum 2½" ϕ lifting pin shall be used to engage the lifting loops during handling.

Corrosion Inhibitor, per Article 1020.05(b)(10) and 1021.07 of the Standard Specifications, shall be used in the concrete for precast prestressed concrete deck beams.

Compressive strength of prestressed concrete, f'c, shall be 6000 psi.

Compressive strength of prestressed concrete at release, f'ci, shall be 5000 psi.

BILL OF MATERIAL

Precast Prestressed Conc. Deck Bms. (27" depth)	Sq. Ft.	

PD-2736-LD 06-01-16

FILE NAME =	USER NAME =	DESIGNED -	REVISED -	STATE OF ILLINOIS DEPARTMENT OF TRANSPORTATION	27" x 36" PPC DECK BEAM DETAILS STRUCTURE NO.	F.A. RTE.	SECTION	COUNTY	TOTAL SHEETS / SHEET NO.
		CHECKED -	REVISED -						
	PLOT SCALE =	DRAWN -	REVISED -					CONTRACT NO.	
	PLOT DATE =	CHECKED -	REVISED -					ILLINOIS FED. AID PROJECT	

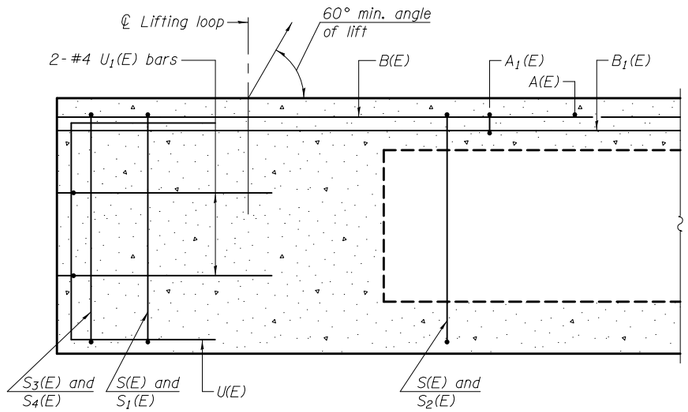

SECTION A-A

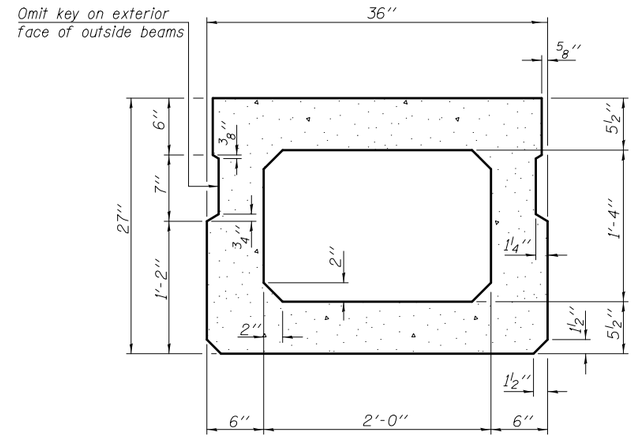

SECTION B-B

(Showing dimensions)

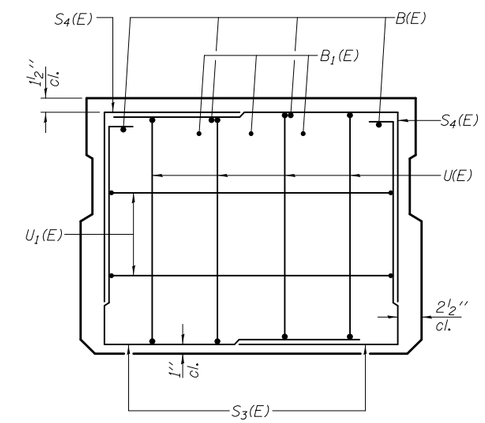

VIEW C-C

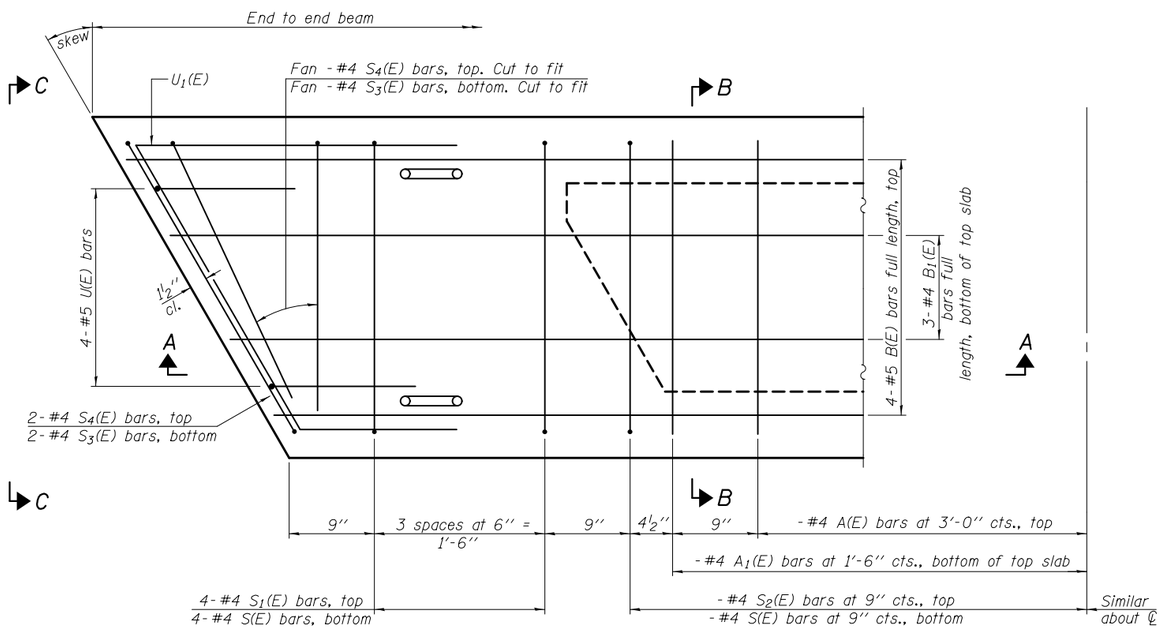

PLAN VIEW

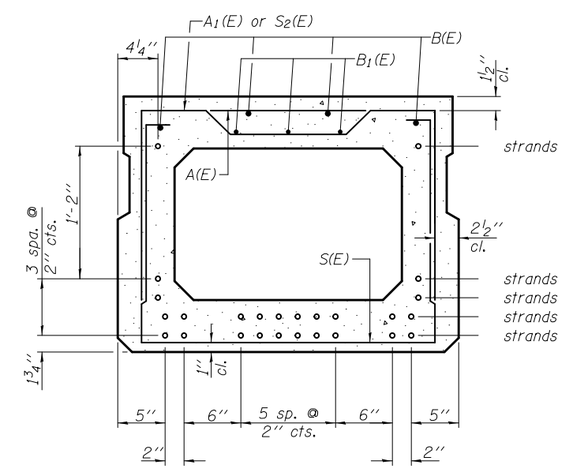

SECTION B-B

(Showing reinforcement and permissible strand locations)

Note: Place the number of strands specified in each row symmetrically about the centerline of beam in the permissible strand locations shown.

BAR LIST
ONE BEAM ONLY

(For information only)

Bar	No.	Size	Length	Shape
A(E)		#4	2'-7''	
A1(E)		#4	2'-10''	
B(E)		#5		
B1(E)		#4		
S(E)		#4	7'-5''	
S1(E)	8	#4	5'-11''	
S2(E)		#4	6'-2''	
S3(E)		#4		
S4(E)		#4		
U(E)	8	#5	4'-6''	
U1(E)	4	#4		

Note: See sheet of for additional details and Bill of Material.

Note: Spacing of S(E) and S2(E) bars may be adjusted up to 4'' in the immediate area of the transverse tie diaphragms to miss the block outs for the transverse ties.

MINIMUM BAR LAP

#4 bar = 1'-11''
#5 bar = 2'-6''

PD-2736-R 06-01-16

FILE NAME =	USER NAME =	DESIGNED -	REVISED -
		CHECKED -	REVISED -
	PLOT SCALE =	DRAWN -	REVISED -
	PLOT DATE =	CHECKED -	REVISED -

STATE OF ILLINOIS
DEPARTMENT OF TRANSPORTATION

27'' x 36'' PPC DECK BEAM
STRUCTURE NO.

F.A. RTE.	SECTION	COUNTY	TOTAL SHEETS	SHEET NO.

CONTRACT NO.

ILLINOIS FED. AID PROJECT

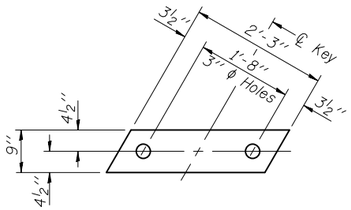

FABRIC BEARING PAD
(Interior)

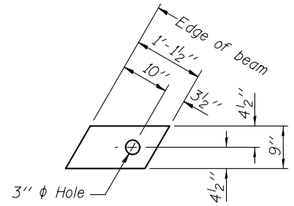

FABRIC BEARING PAD
(Exterior)

FIXED

Notes:
All bearing pads shall be 1'' thick.
Omit holes when using expansion bearings.
Expansion bearing pad shall be bonded to the substructure.

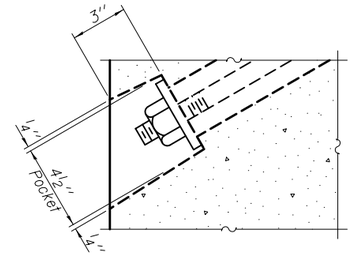

SECTION A-A

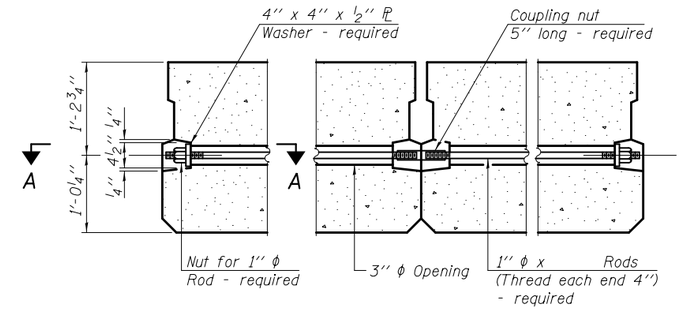

TYPICAL TRANSVERSE TIE ASSEMBLY

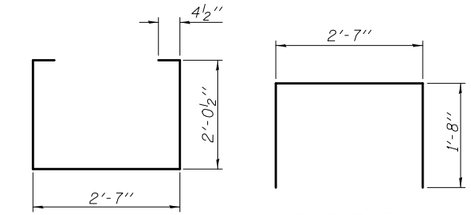

BAR S(E)

BAR S1(E)

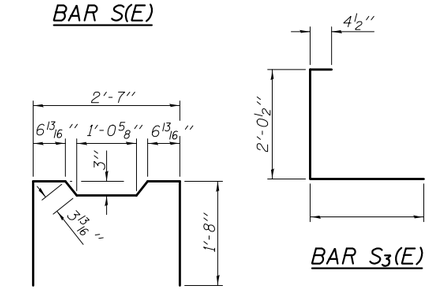

BAR S2(E)

BAR S3(E)

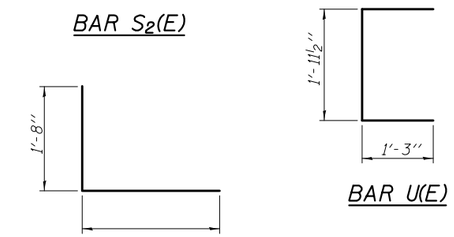

BAR S4(E)

BAR U(E)

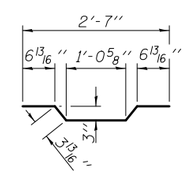

BAR A1(E)

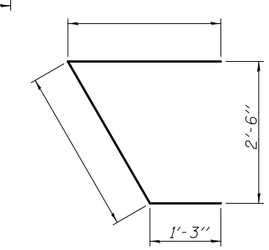

BAR U1(E)

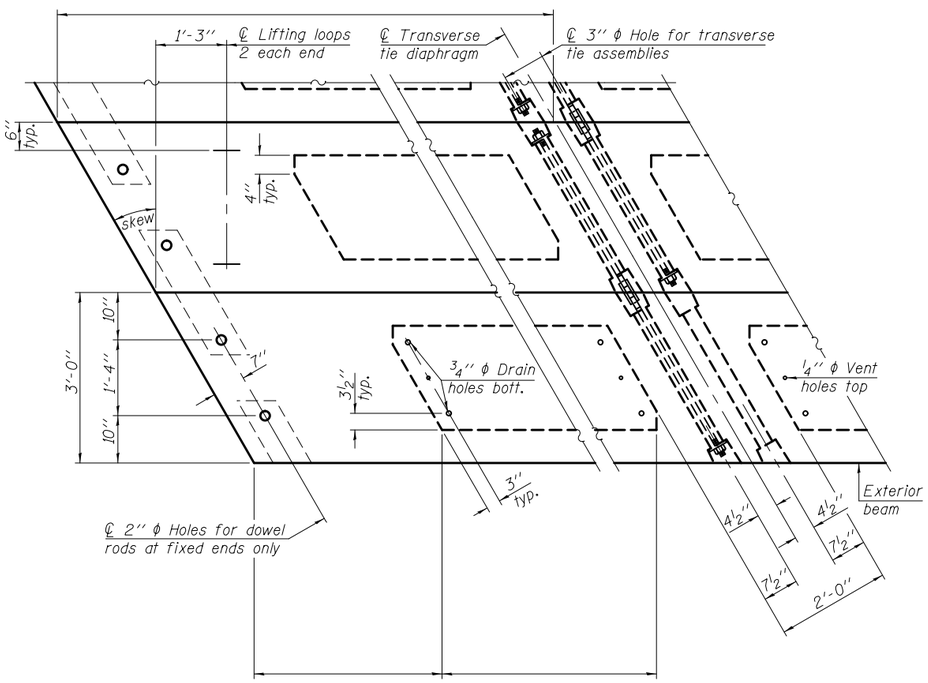

PLAN VIEW

Note: Connect beams in pairs with the transverse tie configuration shown.

NOTES

Prestressing steel shall be uncoated high strength, low relaxation 7-wire strand, Grade 270. The nominal diameter shall be ½'' and the nominal cross-sectional area shall be 0.153 sq. in.

The 1'' ϕ rods in the transverse tie assembly shall be tightened to a snug fit and the threads set. Pockets on exterior faces of bridge shall be filled with grout after transverse tie assembly is in place.

Two ⅛'' fabric adjusting shims of the dimensions of the exterior bearing pad shall be provided for each bearing pad location.

A minimum 2½'' ϕ lifting pin shall be used to engage the lifting loops during handling.

Corrosion Inhibitor, per Article 1020.05(b)(10) and 1021.07 of the Standard Specifications, shall be used in the concrete for precast prestressed concrete deck beams.

Compressive strength of prestressed concrete, f'c, shall be 6000 psi.

Compressive strength of prestressed concrete at release, f'ci, shall be 5000 psi.

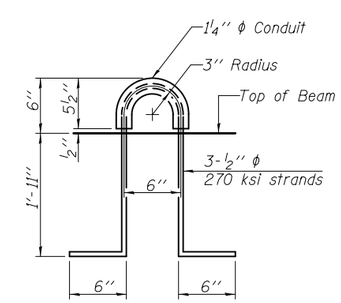

LIFTING LOOP DETAIL

BILL OF MATERIAL

Precast Prestressed Conc. Deck Bms. (27'' depth)	Sq. Ft.	

PD-2736-RD 06-01-16

FILE NAME =	USER NAME =	DESIGNED -	REVISED -	STATE OF ILLINOIS DEPARTMENT OF TRANSPORTATION	27'' x 36'' PPC DECK BEAM DETAILS STRUCTURE NO.	F.A. RTE.	SECTION	COUNTY	TOTAL SHEETS / SHEET NO.
		CHECKED -	REVISED -						
	PLOT SCALE =	DRAWN -	REVISED -			CONTRACT NO.			
	PLOT DATE =	CHECKED -	REVISED -			ILLINOIS	FED. AID PROJECT		

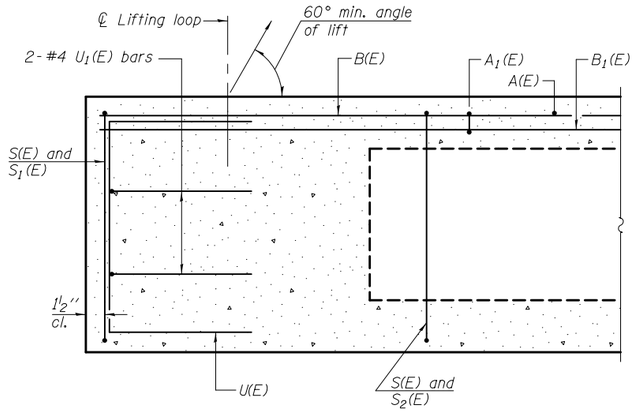

SECTION A-A

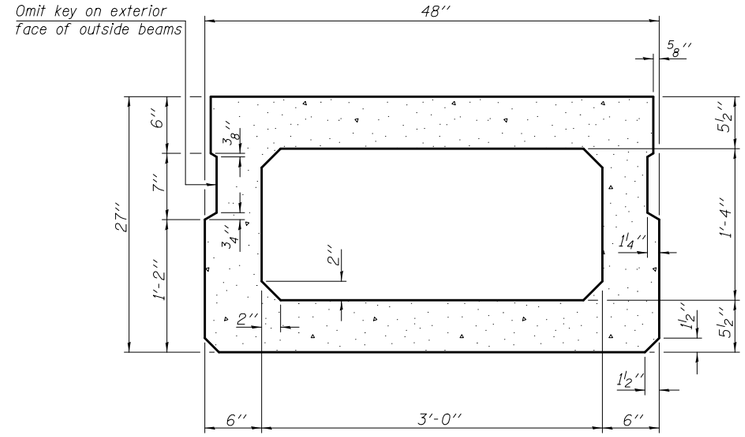

SECTION B-B
(Showing dimensions)

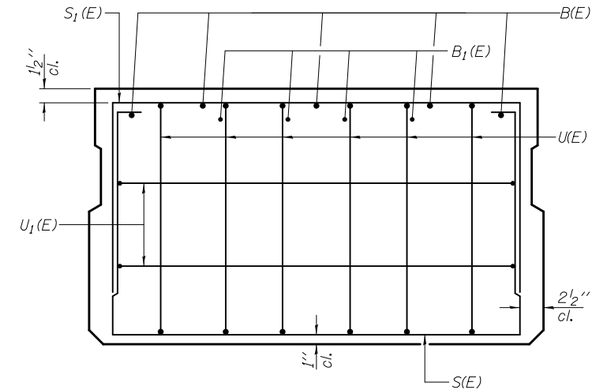

VIEW C-C

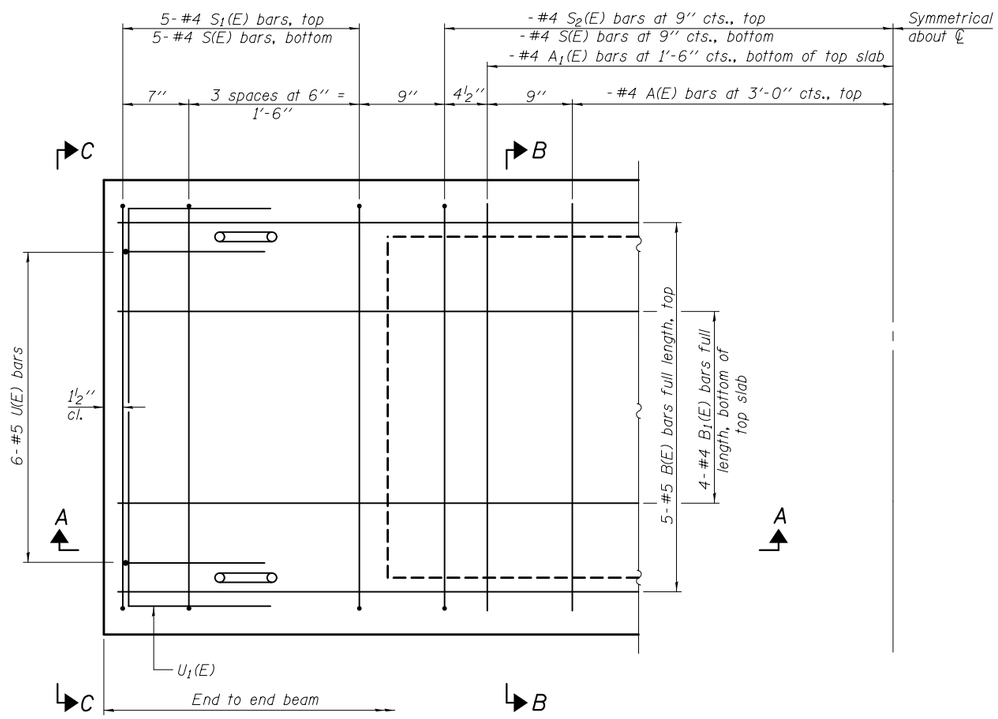

PLAN VIEW

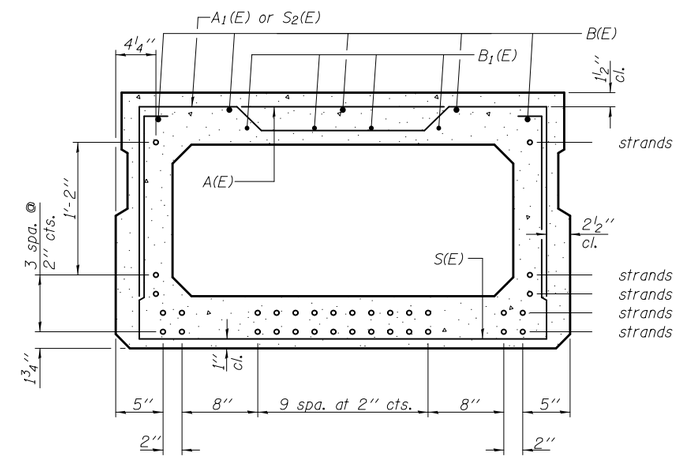

SECTION B-B
(Showing reinforcement and permissible strand locations)

Note: Place the number of strands specified in each row symmetrically about the centerline of beam in the permissible strand locations shown.

BAR LIST
ONE BEAM ONLY
(For information only)

Bar	No.	Size	Length	Shape
A(E)		#4	3′-7″	
A_1(E)		#4	3′-10″	
B(E)		#5		
B_1(E)		#4		
S(E)		#4	8′-5″	
S_1(E)	10	#4	6′-11″	
S_2(E)		#4	7′-2″	
U(E)	12	#5	4′-6″	
U_1(E)	4	#4	6′-0″	

Note: See sheet of for additional details and Bill of Material.

Note: Spacing of S(E) and S_2(E) bars may be adjusted up to 4″ in the immediate area of the transverse tie diaphragms to miss the block outs for the transverse ties.

MINIMUM BAR LAP
#4 bar = 1′-11″
#5 bar = 2′-6″

PD-2748-0 06-01-16

FILE NAME =	USER NAME =	DESIGNED -	REVISED -	STATE OF ILLINOIS DEPARTMENT OF TRANSPORTATION	27″ x 48″ PPC DECK BEAM STRUCTURE NO.	F.A. RTE.	SECTION	COUNTY	TOTAL SHEETS	SHEET NO.
		CHECKED -	REVISED -							
	PLOT SCALE =	DRAWN -	REVISED -			CONTRACT NO.				
	PLOT DATE =	CHECKED -	REVISED -			ILLINOIS FED. AID PROJECT				

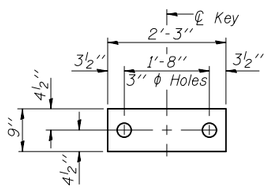

FABRIC BEARING PAD
(Interior)

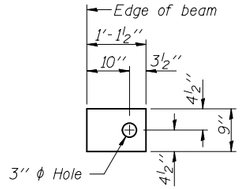

FABRIC BEARING PAD
(Exterior)

FIXED

Notes:
All bearing pads shall be 1" thick.
Omit holes when using expansion bearings.
Expansion bearing pad shall be bonded to the substructure.

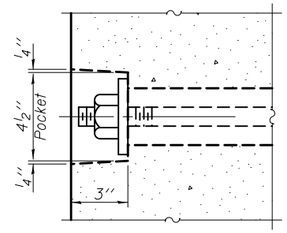

SECTION A-A

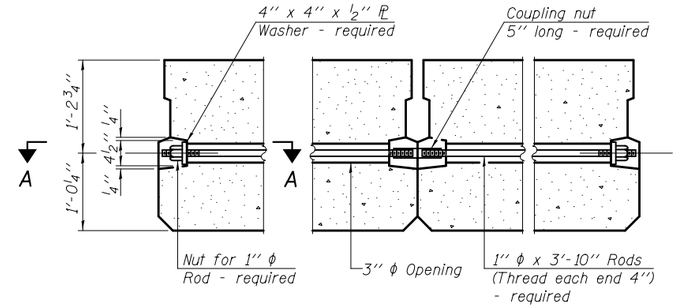

TYPICAL TRANSVERSE TIE ASSEMBLY

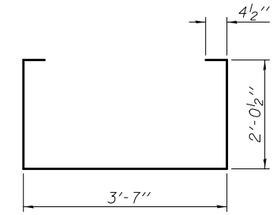

BAR S(E)

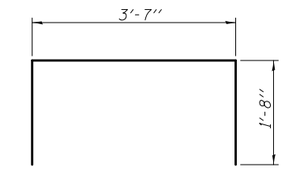

BAR S_1(E)

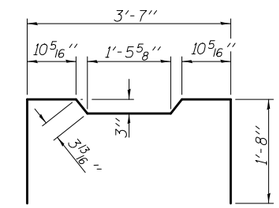

BAR S_2(E)

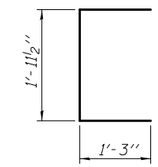

BAR U(E)

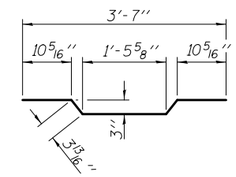

BAR A_1(E)

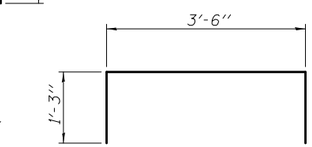

BAR U_1(E)

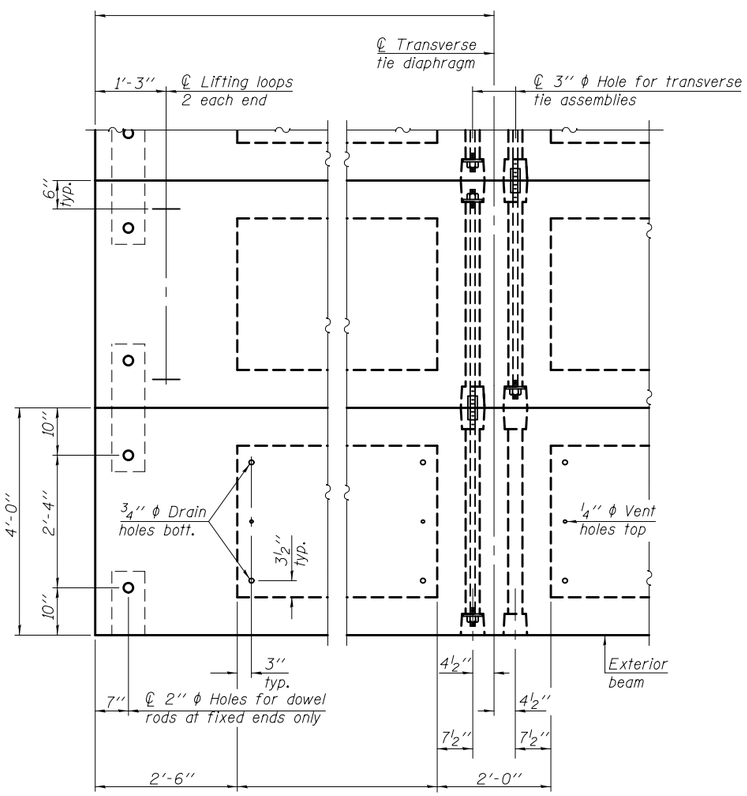

PLAN VIEW

Note: Connect beams in pairs with the transverse tie configuration shown.

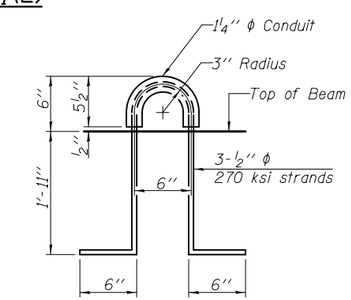

LIFTING LOOP DETAIL

NOTES

Prestressing steel shall be uncoated high strength, low relaxation 7-wire strand, Grade 270. The nominal diameter shall be ½" and the nominal cross-sectional area shall be 0.153 sq. in.

The 1" ϕ rods in the transverse tie assembly shall be tightened to a snug fit and the threads set. Pockets on exterior faces of bridge shall be filled with grout after transverse tie assembly is in place.

Two ⅛" fabric adjusting shims of the dimensions of the exterior bearing pad shall be provided for each bearing pad location.

A minimum 2½" ϕ lifting pin shall be used to engage the lifting loops during handling.

Corrosion Inhibitor, per Article 1020.05(b)(10) and 1021.07 of the Standard Specifications, shall be used in the concrete for precast prestressed concrete deck beams.

Compressive strength of prestressed concrete, f'c, shall be 6000 psi.

Compressive strength of prestressed concrete at release, f'ci, shall be 5000 psi.

BILL OF MATERIAL

Precast Prestressed Conc. Deck Bms. (27" depth)	Sq. Ft.	

PD-2748-0D 06-01-16

FILE NAME =	USER NAME =	DESIGNED -	REVISED -	STATE OF ILLINOIS DEPARTMENT OF TRANSPORTATION	27" x 48" PPC DECK BEAM DETAILS STRUCTURE NO.	F.A. RTE.	SECTION	COUNTY	TOTAL SHEETS / SHEET NO.
		CHECKED -	REVISED -						
	PLOT SCALE =	DRAWN -	REVISED -					CONTRACT NO.	
	PLOT DATE =	CHECKED -	REVISED -				ILLINOIS	FED. AID PROJECT	

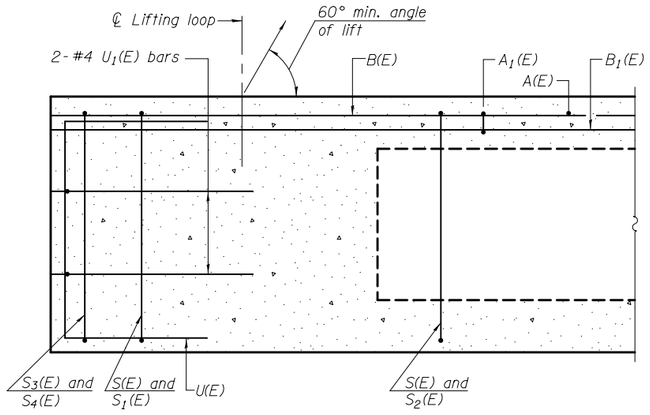

SECTION A-A

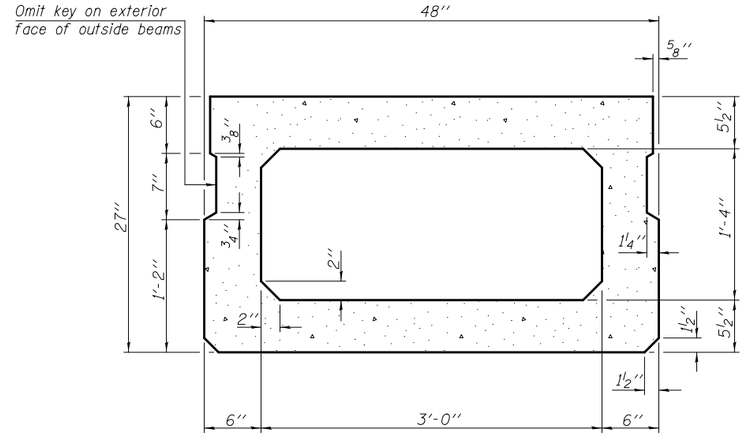

SECTION B-B

(Showing dimensions)

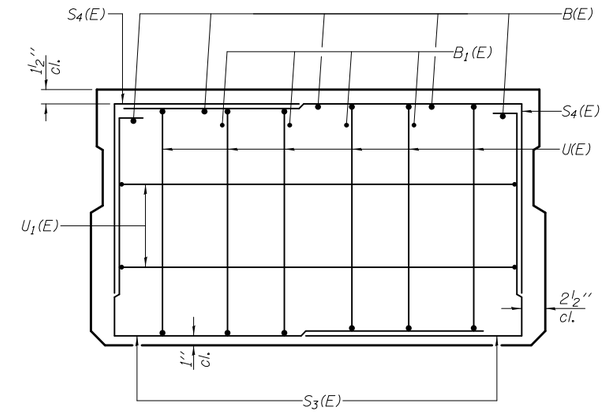

VIEW C-C

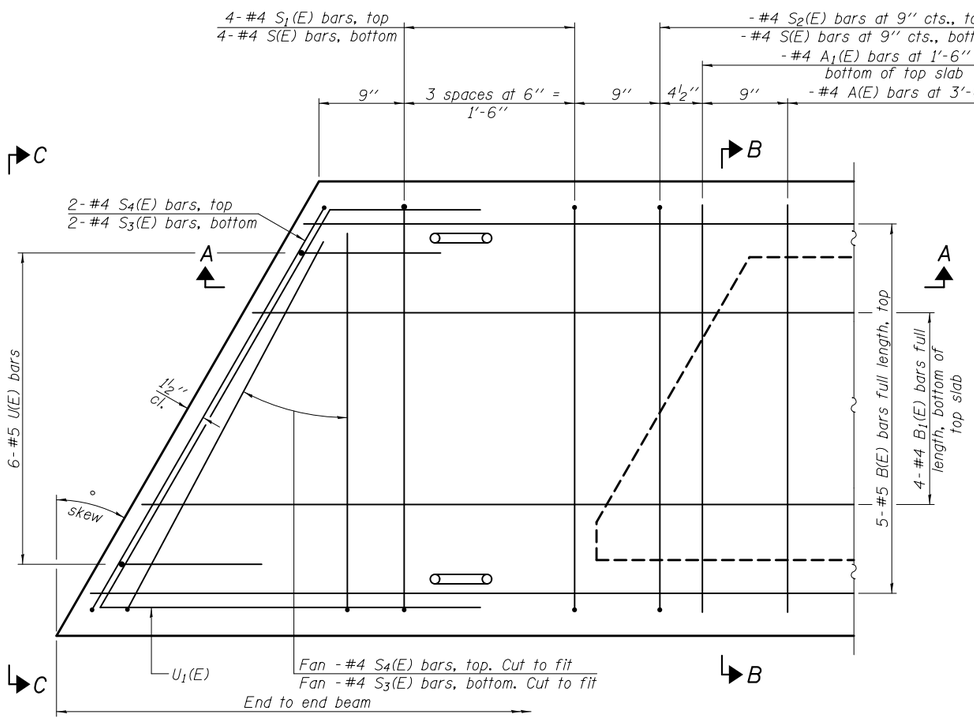

PLAN VIEW

Note: Spacing of S(E) and S2(E) bars may be adjusted up to 4″ in the immediate area of the transverse tie diaphragms to miss the block outs for the transverse ties.

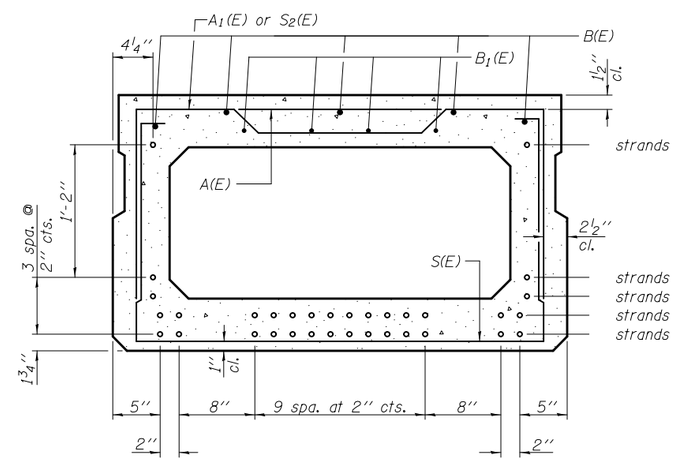

SECTION B-B

(Showing reinforcement and permissible strand locations)

Note: Place the number of strands specified in each row symmetrically about the centerline of beam in the permissible strand locations shown.

BAR LIST
ONE BEAM ONLY

(For information only)

Bar	No.	Size	Length	Shape
A(E)		#4	3′-7″	
A1(E)		#4	3′-10″	
B(E)		#5		
B1(E)		#4		
S(E)		#4	8′-5″	
S1(E)	8	#4	6′-11″	
S2(E)		#4	7′-2″	
S3(E)		#4		
S4(E)		#4		
U(E)	12	#5	4′-6″	
U1(E)	4	#4		

Note: See sheet of for additional details and Bill of Material.

MINIMUM BAR LAP

#4 bar = 1′-11″
#5 bar = 2′-6″

PD-2748-L 06-01-16

FILE NAME =	USER NAME =	DESIGNED -	REVISED -	STATE OF ILLINOIS DEPARTMENT OF TRANSPORTATION	27″ x 48″ PPC DECK BEAM STRUCTURE NO.	F.A. RTE.	SECTION	COUNTY	TOTAL SHEETS	SHEET NO.
		CHECKED -	REVISED -							
	PLOT SCALE =	DRAWN -	REVISED -			CONTRACT NO.				
	PLOT DATE =	CHECKED -	REVISED -			ILLINOIS FED. AID PROJECT				

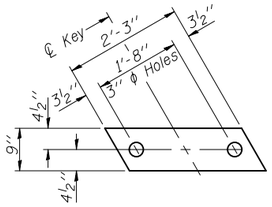

FABRIC BEARING PAD
(Interior)

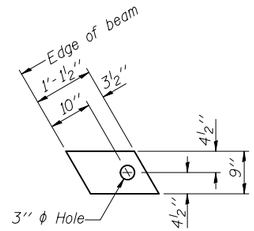

FABRIC BEARING PAD
(Exterior)

FIXED

Notes:
All bearing pads shall be 1" thick.
Omit holes when using expansion bearings.
Expansion bearing pad shall be bonded to the substructure.

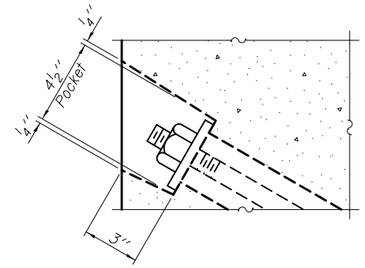

SECTION A-A

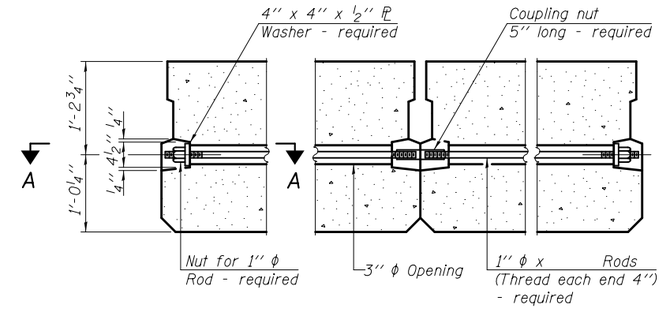

TYPICAL TRANSVERSE TIE ASSEMBLY

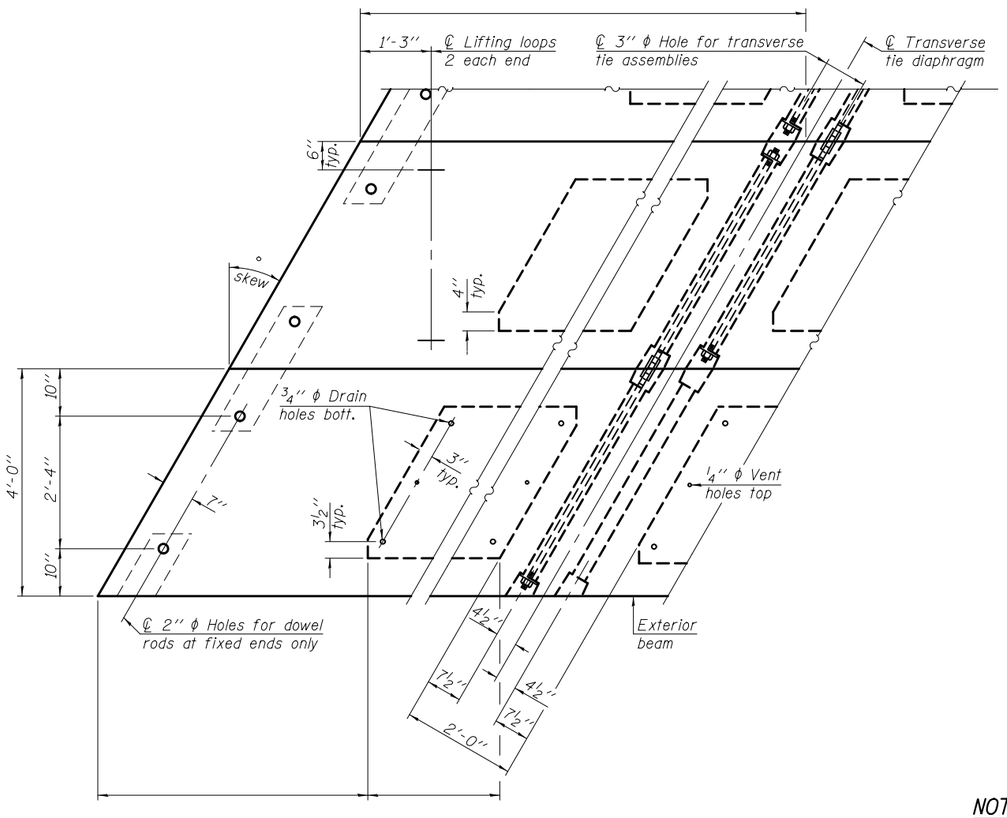

PLAN VIEW

Note: Connect beams in pairs with the transverse tie configuration shown.

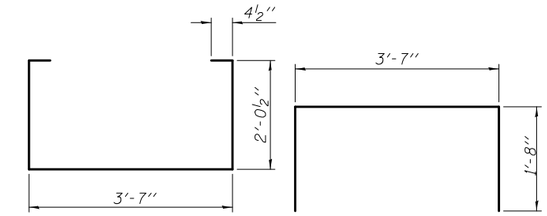

BAR S(E)

BAR S_1(E)

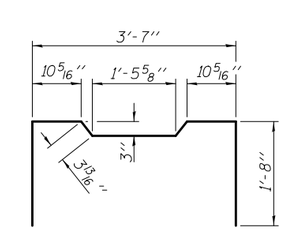

BAR S_2(E)

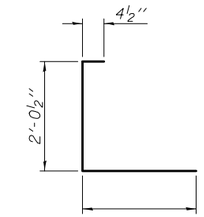

BAR S_3(E)

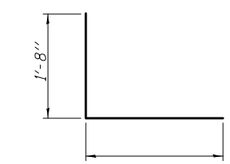

BAR S_4(E)

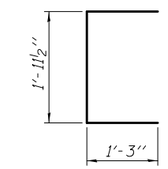

BAR U(E)

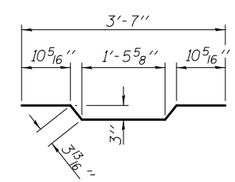

BAR A_1(E)

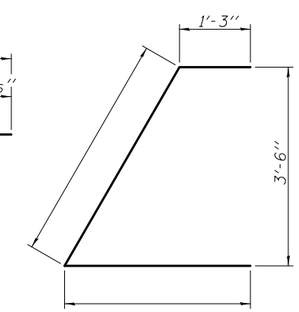

BAR U_1(E)

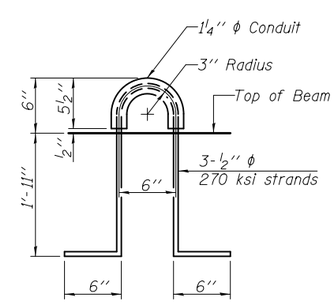

LIFTING LOOP DETAIL

NOTES

Prestressing steel shall be uncoated high strength, low relaxation 7-wire strand, Grade 270. The nominal diameter shall be ½" and the nominal cross-sectional area shall be 0.153 sq. in.

The 1" ϕ rods in the transverse tie assembly shall be tightened to a snug fit and the threads set. Pockets on exterior faces of bridge shall be filled with grout after transverse tie assembly is in place.

Two ⅛" fabric adjusting shims of the dimensions of the exterior bearing pad shall be provided for each bearing pad location.

A minimum 2½" ϕ lifting pin shall be used to engage the lifting loops during handling.

Corrosion Inhibitor, per Article 1020.05(b)(10) and 1021.07 of the Standard Specifications, shall be used in the concrete for precast prestressed concrete deck beams.

Compressive strength of prestressed concrete, f'c, shall be 6000 psi.

Compressive strength of prestressed concrete at release, f'ci, shall be 5000 psi.

BILL OF MATERIAL

Precast Prestressed Conc. Deck Bms. (27" depth)	Sq. Ft.	

PD-2748-LD 06-01-16

FILE NAME =	USER NAME =	DESIGNED -	REVISED -	STATE OF ILLINOIS DEPARTMENT OF TRANSPORTATION	27" x 48" PPC DECK BEAM DETAILS STRUCTURE NO.	F.A. RTE.	SECTION	COUNTY	TOTAL SHEETS	SHEET NO.
		CHECKED -	REVISED -							
	PLOT SCALE =	DRAWN -	REVISED -			CONTRACT NO.				
	PLOT DATE =	CHECKED -	REVISED -			ILLINOIS	FED. AID PROJECT			

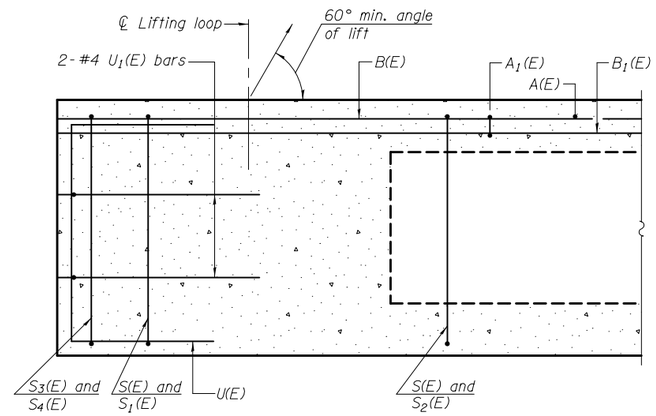

SECTION A-A

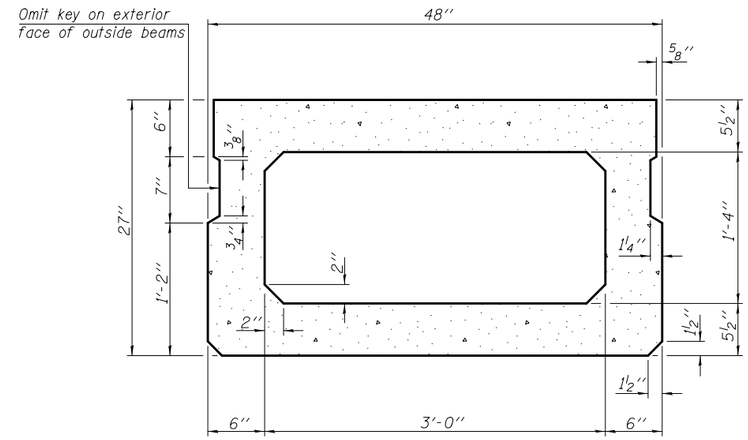

SECTION B-B

(Showing dimensions)

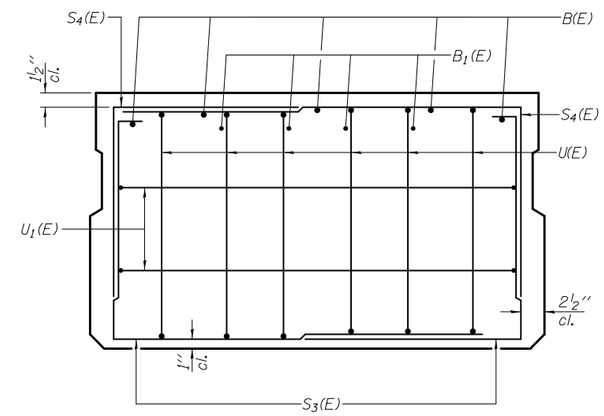

VIEW C-C

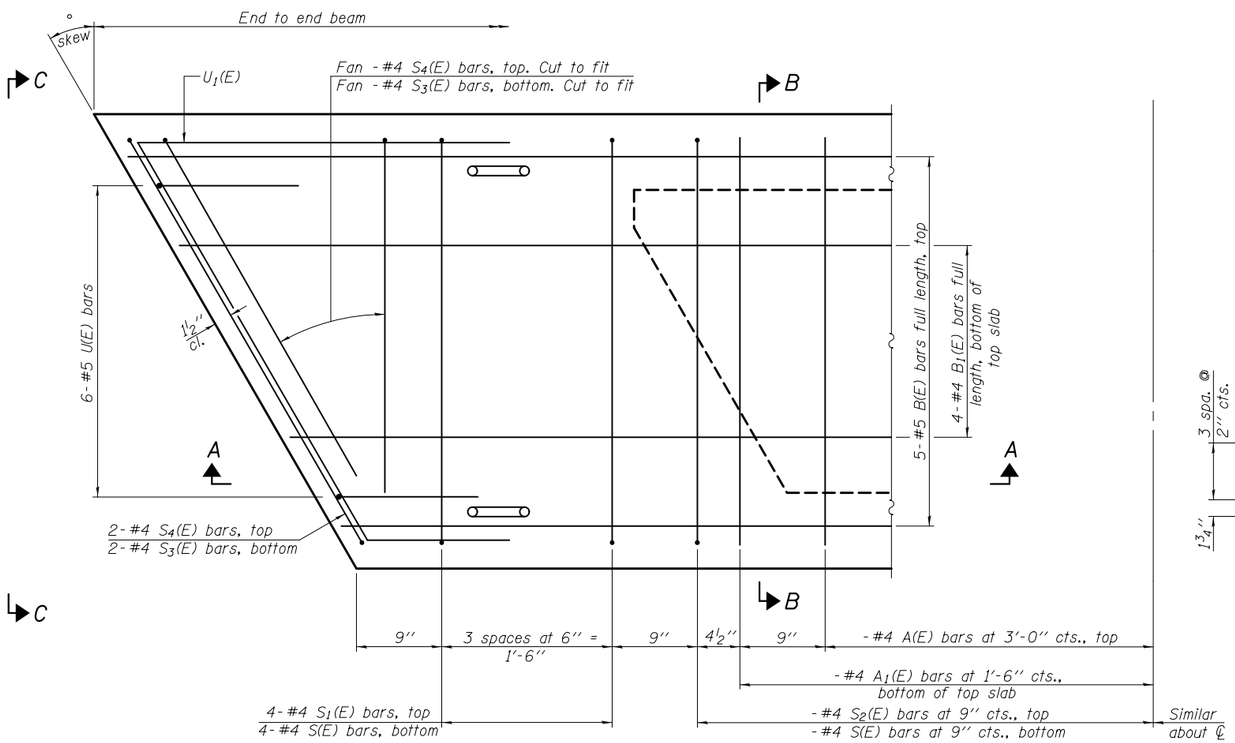

PLAN VIEW

Note: Spacing of S(E) and S_2(E) bars may be adjusted up to 4" in the immediate area of the transverse tie diaphragms to miss the block outs for the transverse ties.

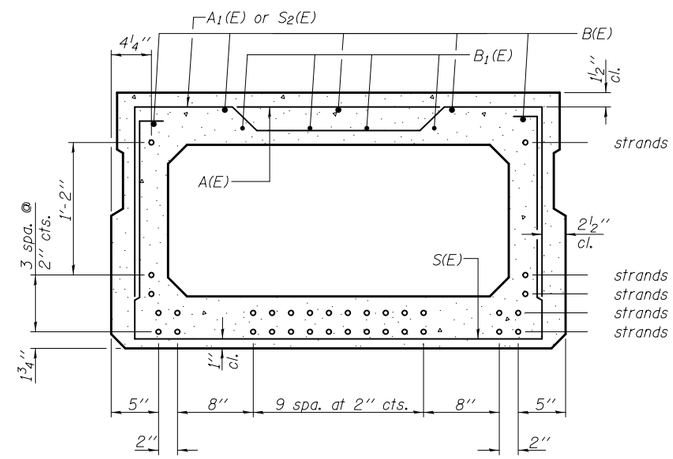

SECTION B-B

(Showing reinforcement and permissible strand locations)

Note: Place the number of strands specified in each row symmetrically about the centerline of beam in the permissible strand locations shown.

BAR LIST
ONE BEAM ONLY

(For information only)

Bar	No.	Size	Length	Shape
A(E)		#4	3'-7"	—
A_1(E)		#4	3'-10"	
B(E)		#5		—
B_1(E)		#4		—
S(E)		#4	8'-5"	
S_1(E)	8	#4	6'-11"	
S_2(E)		#4	7'-2"	
S_3(E)		#4		
S_4(E)		#4		
U(E)	12	#5	4'-6"	
U_1(E)	4	#4		

Note: See sheet of for additional details and Bill of Material.

MINIMUM BAR LAP

#4 bar = 1'-11"
#5 bar = 2'-6"

PD-2748-R 06-01-16

FILE NAME =	USER NAME =	DESIGNED -	REVISED -	STATE OF ILLINOIS DEPARTMENT OF TRANSPORTATION	27" x 48" PPC DECK BEAM STRUCTURE NO.	F.A. RTE.	SECTION	COUNTY	TOTAL SHEETS	SHEET NO.
		CHECKED -	REVISED -							
	PLOT SCALE =	DRAWN -	REVISED -					CONTRACT NO.		
	PLOT DATE =	CHECKED -	REVISED -				ILLINOIS	FED. AID PROJECT		

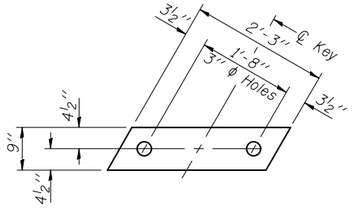

FABRIC BEARING PAD
(Interior)

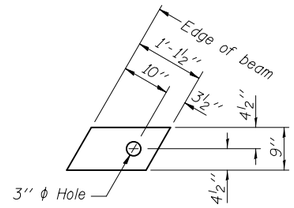

FABRIC BEARING PAD
(Exterior)

FIXED

Notes:
All bearing pads shall be 1'' thick.
Omit holes when using expansion bearings.
Expansion bearing pad shall be bonded to the substructure.

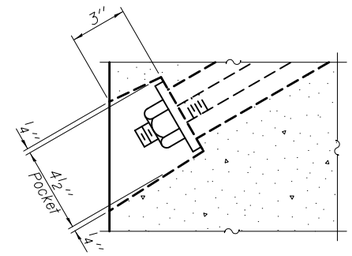

SECTION A-A

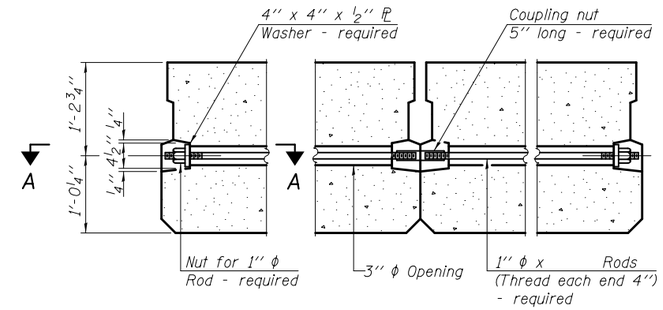

TYPICAL TRANSVERSE TIE ASSEMBLY

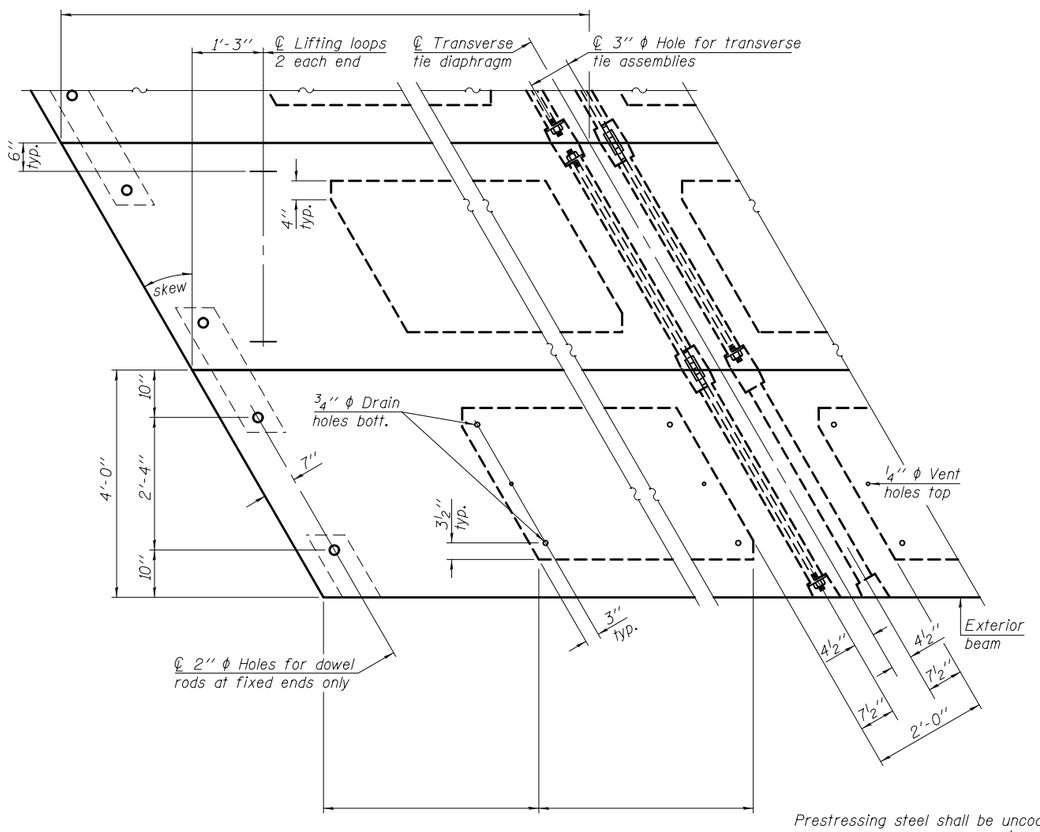

PLAN VIEW

Note: Connect beams in pairs with the transverse tie configuration shown.

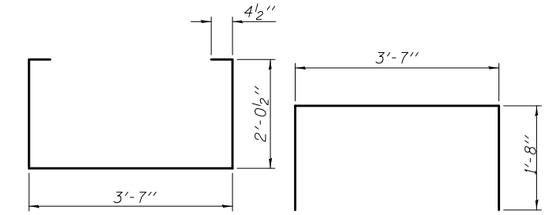

BAR S(E)

BAR S_1(E)

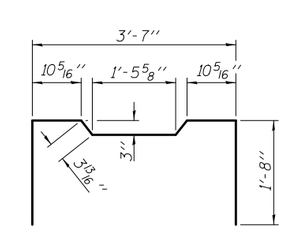

BAR S_2(E)

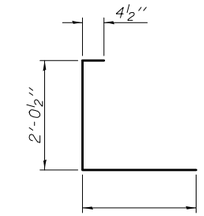

BAR S_3(E)

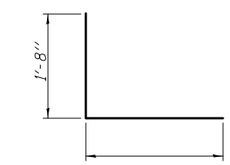

BAR S_4(E)

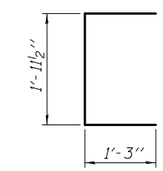

BAR U(E)

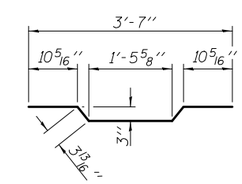

BAR A_1(E)

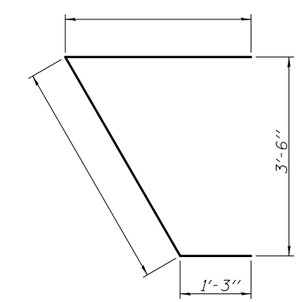

BAR U_1(E)

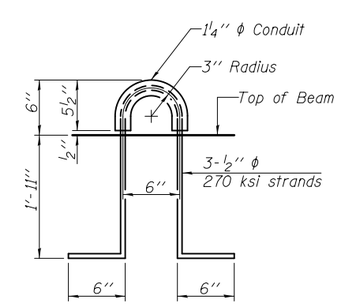

LIFTING LOOP DETAIL

NOTES

Prestressing steel shall be uncoated high strength, low relaxation 7-wire strand, Grade 270. The nominal diameter shall be ½'' and the nominal cross-sectional area shall be 0.153 sq. in.

The 1'' ϕ rods in the transverse tie assembly shall be tightened to a snug fit and the threads set. Pockets on exterior faces of bridge shall be filled with grout after transverse tie assembly is in place.

Two ⅛'' fabric adjusting shims of the dimensions of the exterior bearing pad shall be provided for each bearing pad location.

A minimum 2½'' ϕ lifting pin shall be used to engage the lifting loops during handling.

Corrosion Inhibitor, per Article 1020.05(b)(10) and 1021.07 of the Standard Specifications, shall be used in the concrete for precast prestressed concrete deck beams.

Compressive strength of prestressed concrete, f'c, shall be 6000 psi.

Compressive strength of prestressed concrete at release, f'ci, shall be 5000 psi.

BILL OF MATERIAL

Precast Prestressed Conc. Deck Bms. (27'' depth)	Sq. Ft.	

PD-2748-RD 06-01-16

FILE NAME =	USER NAME =	DESIGNED -	REVISED -
		CHECKED -	REVISED -
	PLOT SCALE =	DRAWN -	REVISED -
	PLOT DATE =	CHECKED -	REVISED -

STATE OF ILLINOIS
DEPARTMENT OF TRANSPORTATION

27'' x 48'' PPC DECK BEAM DETAILS
STRUCTURE NO.

F.A. RTE.	SECTION	COUNTY	TOTAL SHEETS	SHEET NO.

CONTRACT NO.
ILLINOIS FED. AID PROJECT

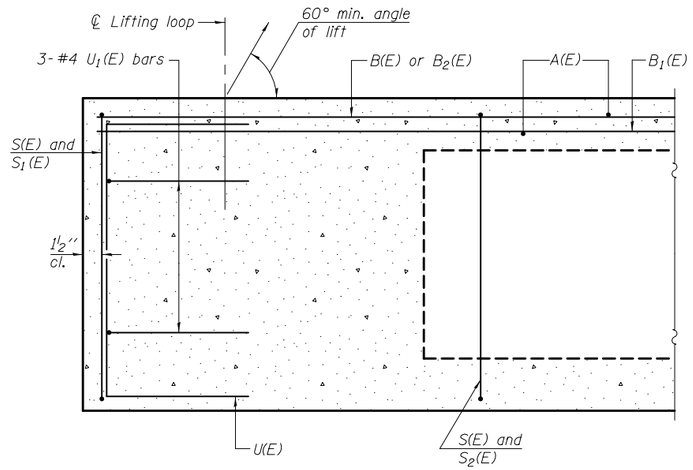

SECTION A-A

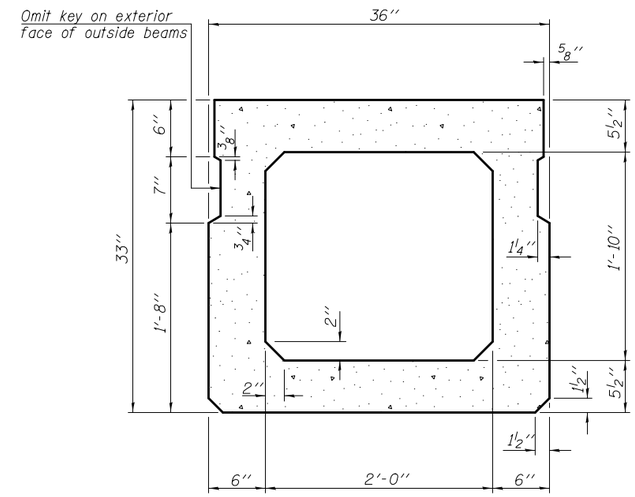

SECTION B-B

(Showing dimensions)

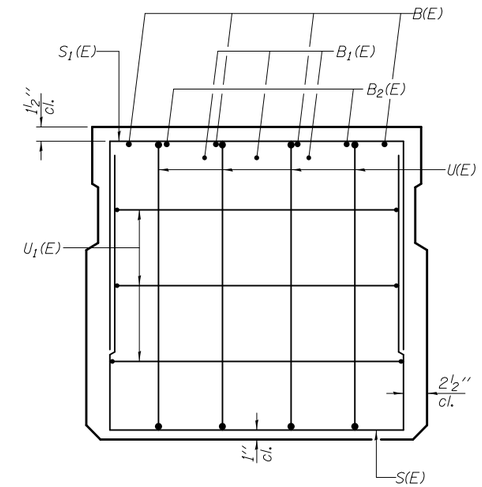

VIEW C-C

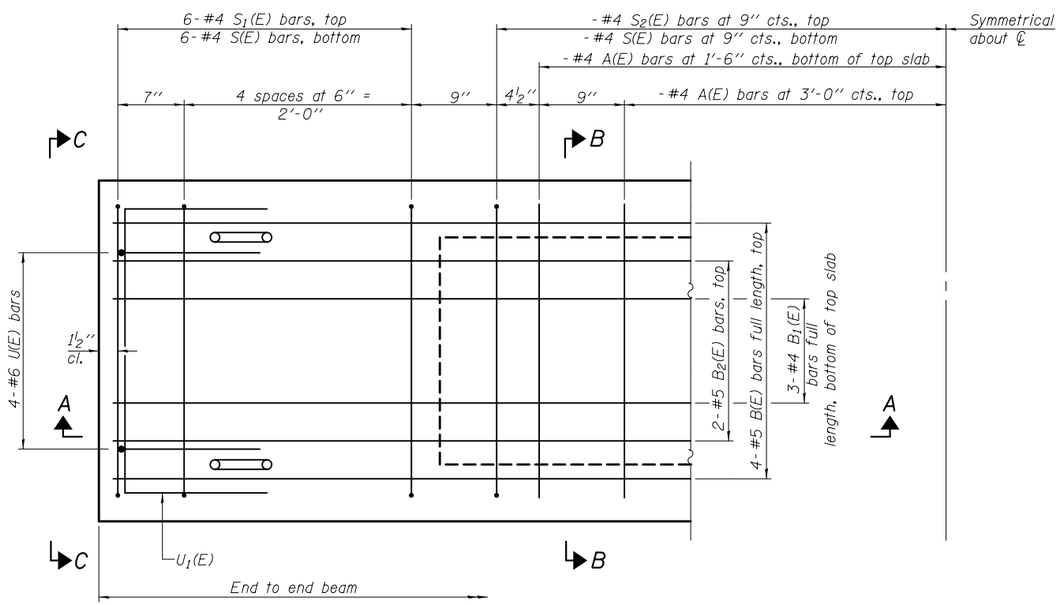

PLAN VIEW

Note: Spacing of S(E) and S_2(E) bars may be adjusted up to 4″ in the immediate area of the transverse tie diaphragms to miss the block outs for the transverse ties.

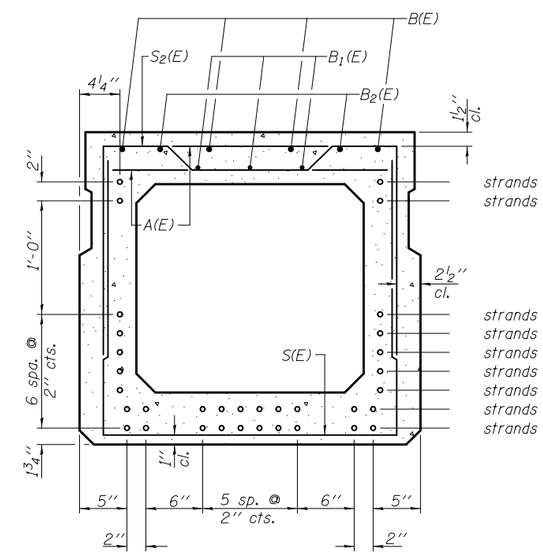

SECTION B-B

(Showing reinforcement and permissible strand locations)

Note: Place the number of strands specified in each row symmetrically about the centerline of beam in the permissible strand locations shown.

BAR LIST
ONE BEAM ONLY

(For information only)

Bar	No.	Size	Length	Shape
A(E)		#4	2′-7″	—
B(E)		#5		—
B_1(E)		#4		—
B_2(E)		#5	10′-0″	—
S(E)		#4	7′-8″	⊔
S_1(E)	12	#4	6′-5″	⊓
S_2(E)		#4	6′-8″	⊓
U(E)	8	#6	5′-0″	⊏
U_1(E)	6	#4	5′-0″	⊓

Note: See sheet of for additional details and Bill of Material.

MINIMUM BAR LAP

#4 bar = 1′-11″
#5 bar = 2′-6″

PD-3336-0 6-8-15

FILE NAME =	USER NAME =	DESIGNED -	REVISED -	STATE OF ILLINOIS DEPARTMENT OF TRANSPORTATION	33″ x 36″ PPC DECK BEAM STRUCTURE NO.	F.A. RTE.	SECTION	COUNTY	TOTAL SHEETS	SHEET NO.
		CHECKED -	REVISED -							
	PLOT SCALE =	DRAWN -	REVISED -			CONTRACT NO.				
	PLOT DATE =	CHECKED -	REVISED -			ILLINOIS FED. AID PROJECT				

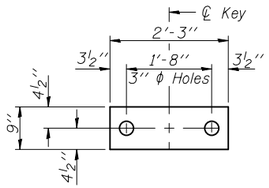

FABRIC BEARING PAD
(Interior)

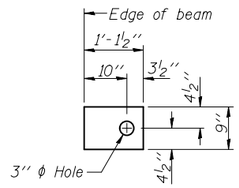

FABRIC BEARING PAD
(Exterior)

FIXED

Notes:
All bearing pads shall be 1" thick.
Omit holes when using expansion bearings.
Expansion bearing pad shall be bonded to the substructure.

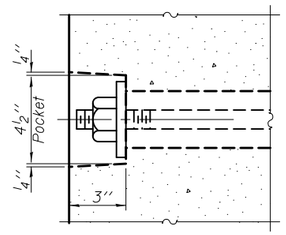

SECTION A-A

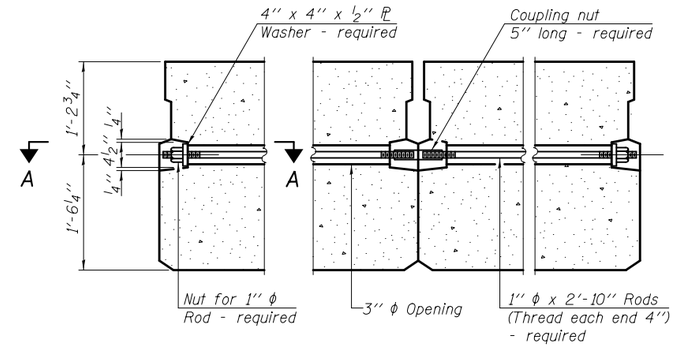

TYPICAL TRANSVERSE TIE ASSEMBLY

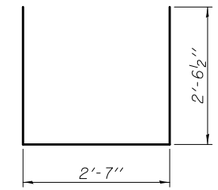

BAR S(E)

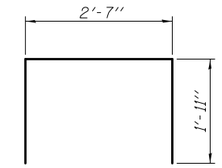

BAR S_1(E)

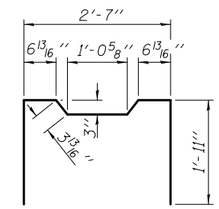

BAR S_2(E)

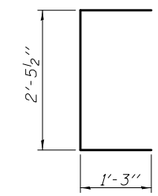

BAR U(E)

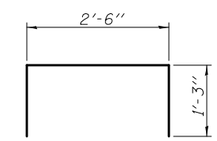

BAR U_1(E)

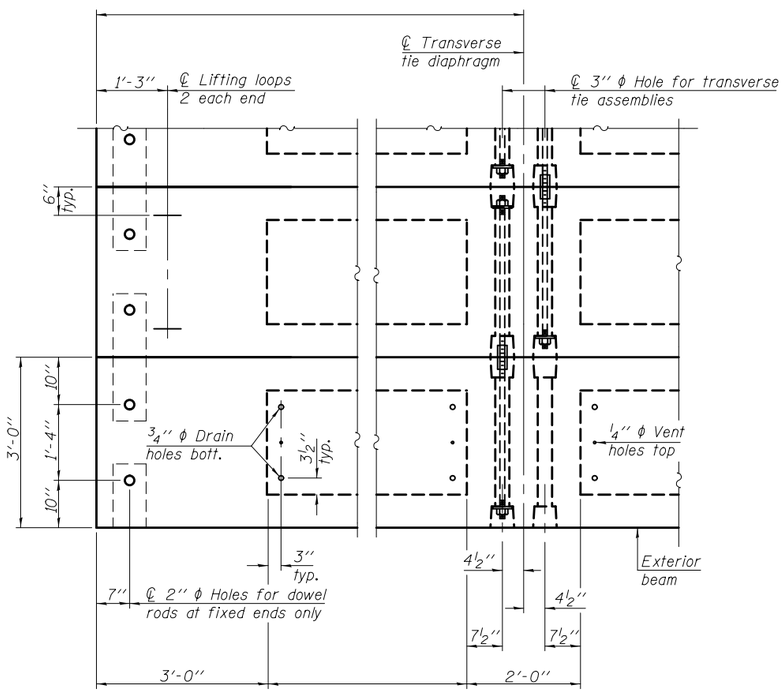

PLAN VIEW

Note: Connect beams in pairs with the transverse tie configuration shown.

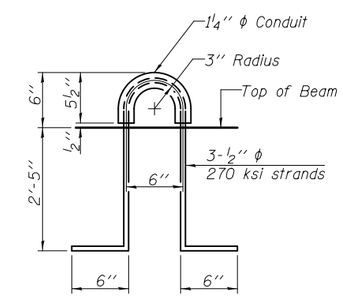

LIFTING LOOP DETAIL

NOTES

Prestressing steel shall be uncoated high strength, low relaxation 7-wire strand, Grade 270. The nominal diameter shall be ½" and the nominal cross-sectional area shall be 0.153 sq. in.

The 1" ϕ rods in the transverse tie assembly shall be tightened to a snug fit and the threads set. Pockets on exterior faces of bridge shall be filled with grout after transverse tie assembly is in place.

Two ⅛" fabric adjusting shims of the dimensions of the exterior bearing pad shall be provided for each bearing pad location.

A minimum 2½" ϕ lifting pin shall be used to engage the lifting loops during handling.

Corrosion Inhibitor, per Article 1020.05(b)(10) and 1021.07 of the Standard Specifications, shall be used in the concrete for precast prestressed concrete deck beams.

Compressive strength of prestressed concrete, f'c, shall be 6000 psi.

Compressive strength of prestressed concrete at release, f'ci, shall be 5000 psi.

BILL OF MATERIAL

Precast Prestressed Conc. Deck Bms. (33" depth)	Sq. Ft.	

PD-3336-0D 1-28-16

FILE NAME =	USER NAME =	DESIGNED -	REVISED -
		CHECKED -	REVISED -
	PLOT SCALE =	DRAWN -	REVISED -
	PLOT DATE =	CHECKED -	REVISED -

STATE OF ILLINOIS
DEPARTMENT OF TRANSPORTATION

33" x 36" PPC DECK BEAM DETAILS
STRUCTURE NO.

F.A. RTE.	SECTION	COUNTY	TOTAL SHEETS	SHEET NO.

CONTRACT NO.

ILLINOIS FED. AID PROJECT

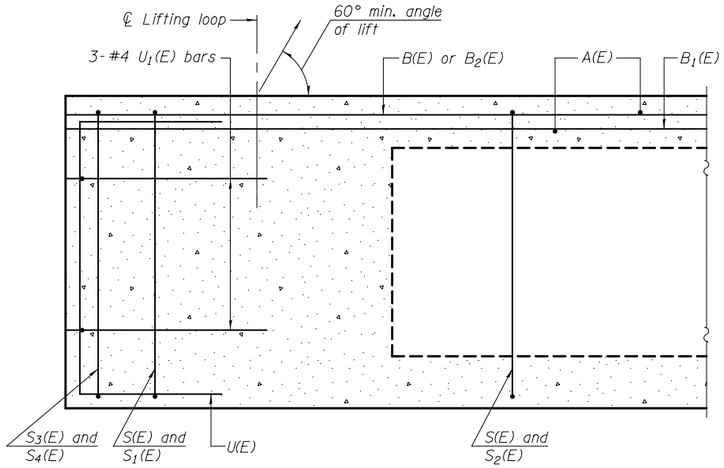

SECTION A-A

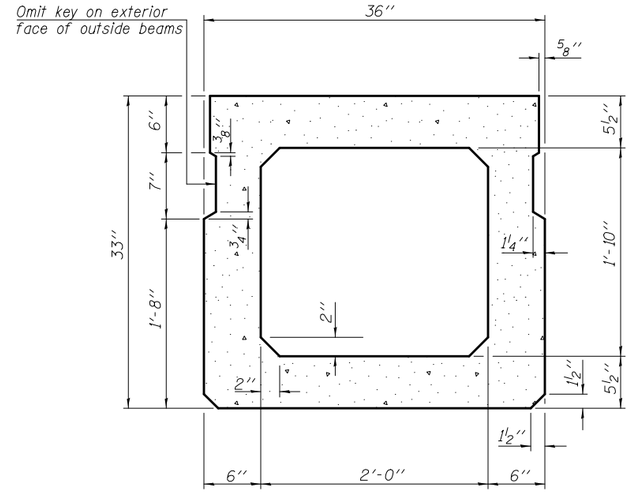

SECTION B-B
(Showing dimensions)

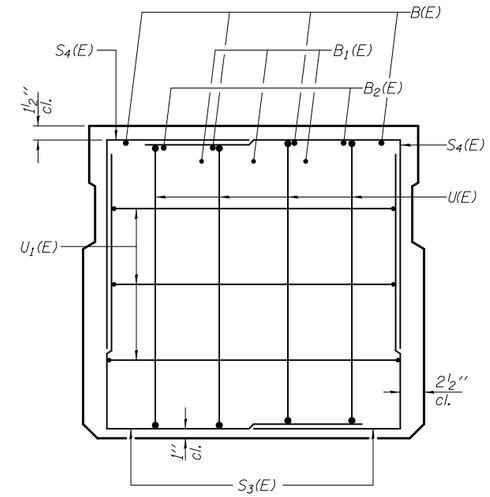

VIEW C-C

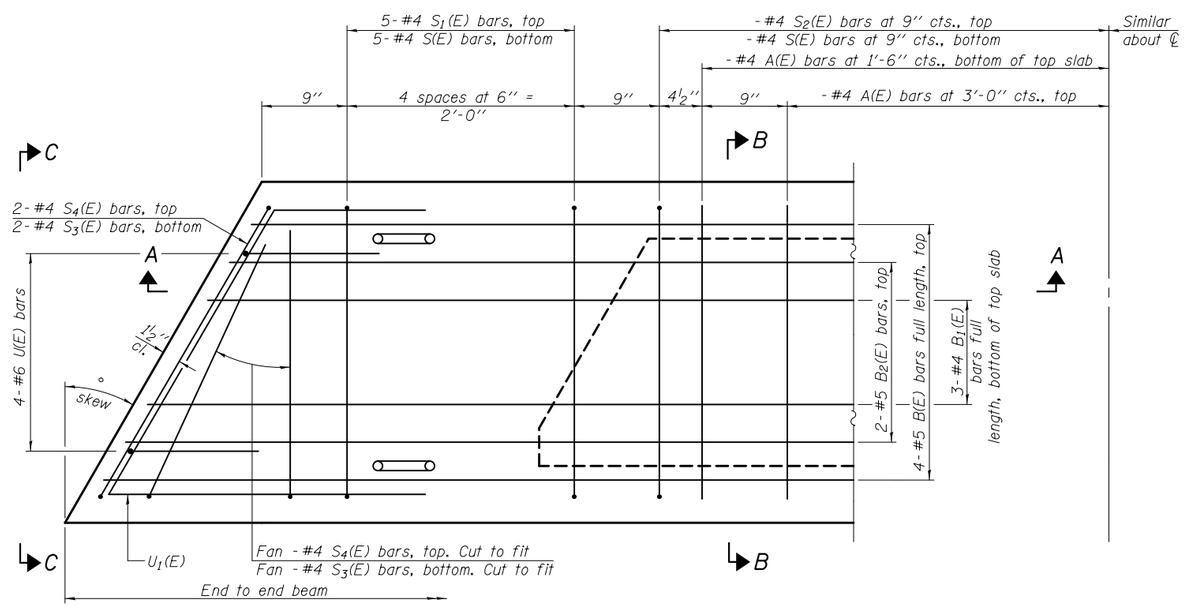

PLAN VIEW

Note: Spacing of S(E) and S_2(E) bars may be adjusted up to 4″ in the immediate area of the transverse tie diaphragms to miss the block outs for the transverse ties.

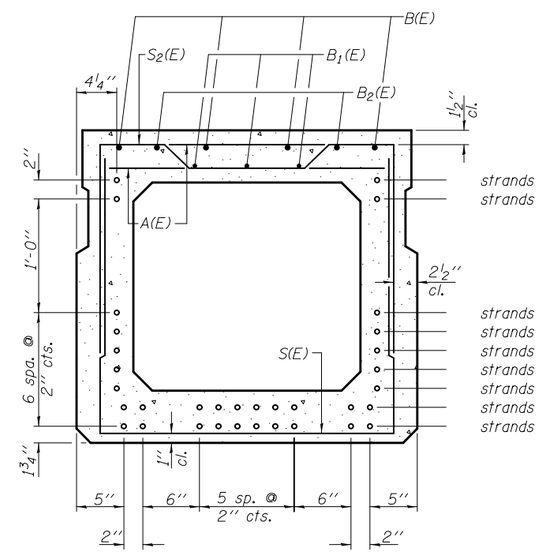

SECTION B-B
(Showing reinforcement and permissible strand locations)

Note: Place the number of strands specified in each row symmetrically about the centerline of beam in the permissible strand locations shown.

BAR LIST
ONE BEAM ONLY
(For information only)

Bar	No.	Size	Length	Shape
A(E)		#4	2′-7″	—
B(E)		#5		—
B_1(E)		#4		—
B_2(E)		#5	10′-0″	—
S(E)		#4	7′-8″	⊔
S_1(E)	10	#4	6′-5″	⊓
S_2(E)		#4	6′-8″	⊓
S_3(E)		#4		⊔
S_4(E)		#4		⊔
U(E)	8	#6	5′-0″	⊏
U_1(E)	6	#4		⊏

Note: See sheet of for additional details and Bill of Material.

MINIMUM BAR LAP
#4 bar = 1′-11″
#5 bar = 2′-6″

PD-3336-L 6-8-15

FILE NAME =	USER NAME =	DESIGNED -	REVISED -
		CHECKED -	REVISED -
	PLOT SCALE =	DRAWN -	REVISED -
	PLOT DATE =	CHECKED -	REVISED -

STATE OF ILLINOIS
DEPARTMENT OF TRANSPORTATION

33″ x 36″ PPC DECK BEAM
STRUCTURE NO.

F.A. RTE.	SECTION	COUNTY	TOTAL SHEETS	SHEET NO.

CONTRACT NO.
ILLINOIS FED. AID PROJECT

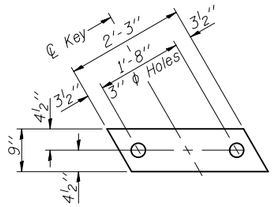

FABRIC BEARING PAD
(Interior)

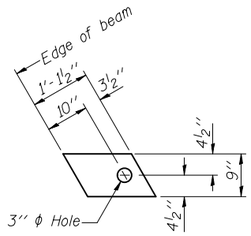

FABRIC BEARING PAD
(Exterior)

FIXED

Notes:
All bearing pads shall be 1" thick.
Omit holes when using expansion bearings.
Expansion bearing pad shall be bonded to the substructure.

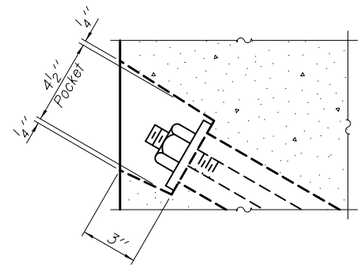

SECTION A-A

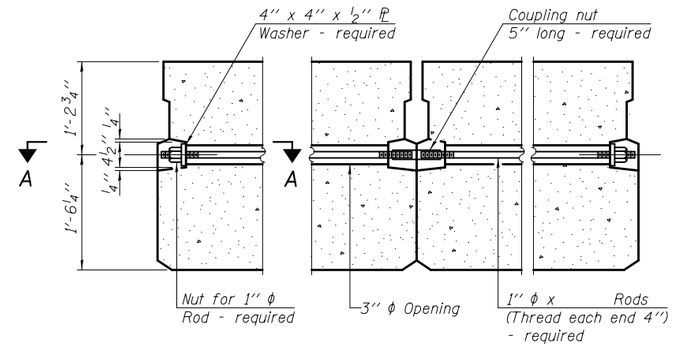

TYPICAL TRANSVERSE TIE ASSEMBLY

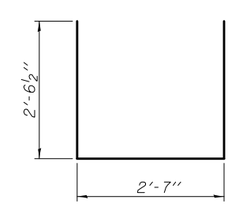

BAR S(E)

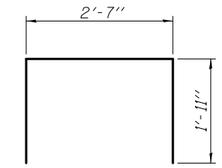

BAR S1(E)

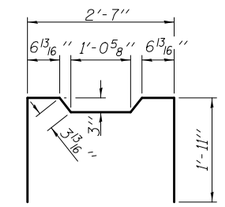

BAR S2(E)

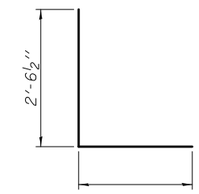

BAR S3(E)

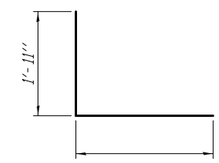

BAR S4(E)

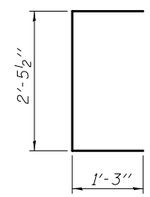

BAR U(E)

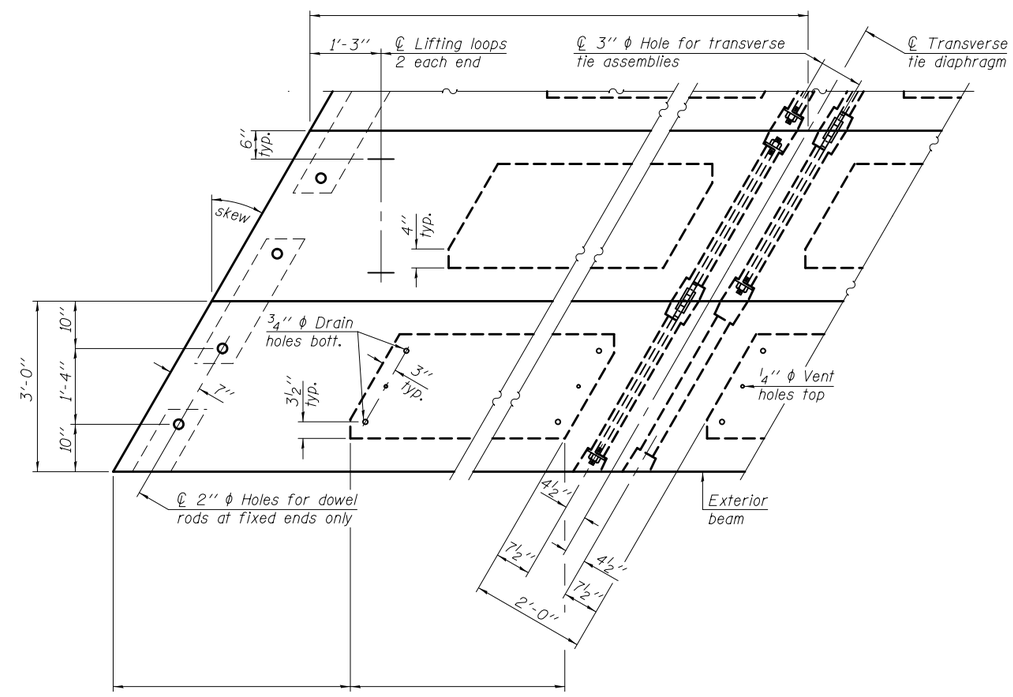

PLAN VIEW

Note: Connect beams in pairs with the transverse tie configuration shown.

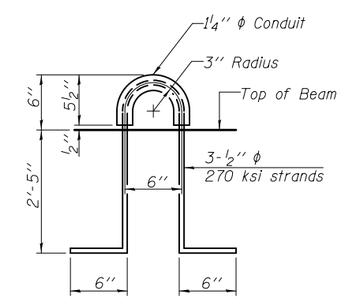

LIFTING LOOP DETAIL

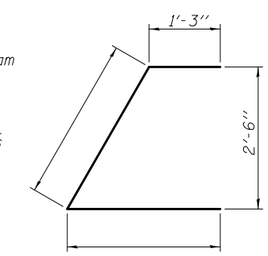

BAR U1(E)

NOTES

Prestressing steel shall be uncoated high strength, low relaxation 7-wire strand, Grade 270. The nominal diameter shall be ½" and the nominal cross-sectional area shall be 0.153 sq. in.

The 1" ϕ rods in the transverse tie assembly shall be tightened to a snug fit and the threads set. Pockets on exterior faces of bridge shall be filled with grout after transverse tie assembly is in place.

Two ⅛" fabric adjusting shims of the dimensions of the exterior bearing pad shall be provided for each bearing pad location.

A minimum 2½" ϕ lifting pin shall be used to engage the lifting loops during handling.

Corrosion Inhibitor, per Article 1020.05(b)(10) and 1021.07 of the Standard Specifications, shall be used in the concrete for precast prestressed concrete deck beams.

Compressive strength of prestressed concrete, f'c, shall be 6000 psi.

Compressive strength of prestressed concrete at release, f'ci, shall be 5000 psi.

BILL OF MATERIAL

Precast Prestressed Conc. Deck Bms. (33" depth)	Sq. Ft.	

PD-3336-LD 1-28-16

FILE NAME =	USER NAME =	DESIGNED -	REVISED -	STATE OF ILLINOIS DEPARTMENT OF TRANSPORTATION	33" x 36" PPC DECK BEAM DETAILS STRUCTURE NO.	F.A. RTE.	SECTION	COUNTY	TOTAL SHEETS / SHEET NO.
		CHECKED -	REVISED -						
	PLOT SCALE =	DRAWN -	REVISED -					CONTRACT NO.	
	PLOT DATE =	CHECKED -	REVISED -				ILLINOIS	FED. AID PROJECT	

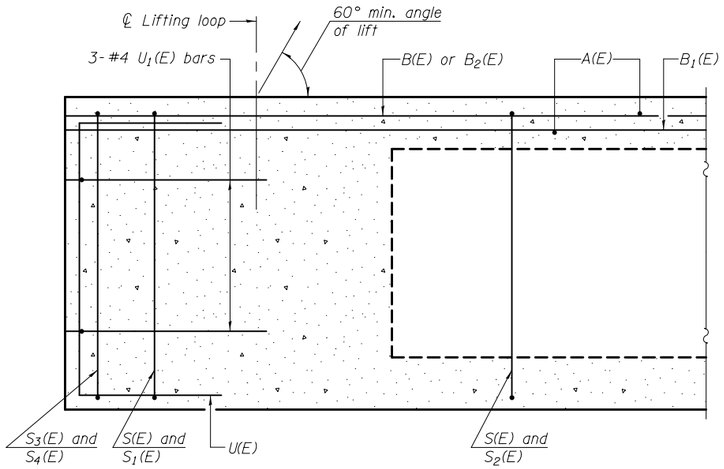

SECTION A-A

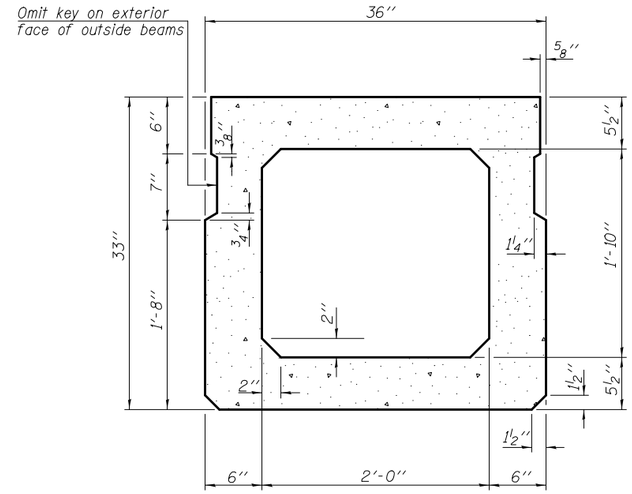

SECTION B-B

(Showing dimensions)

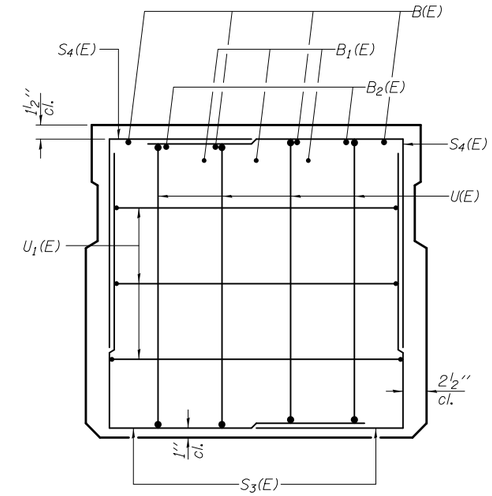

VIEW C-C

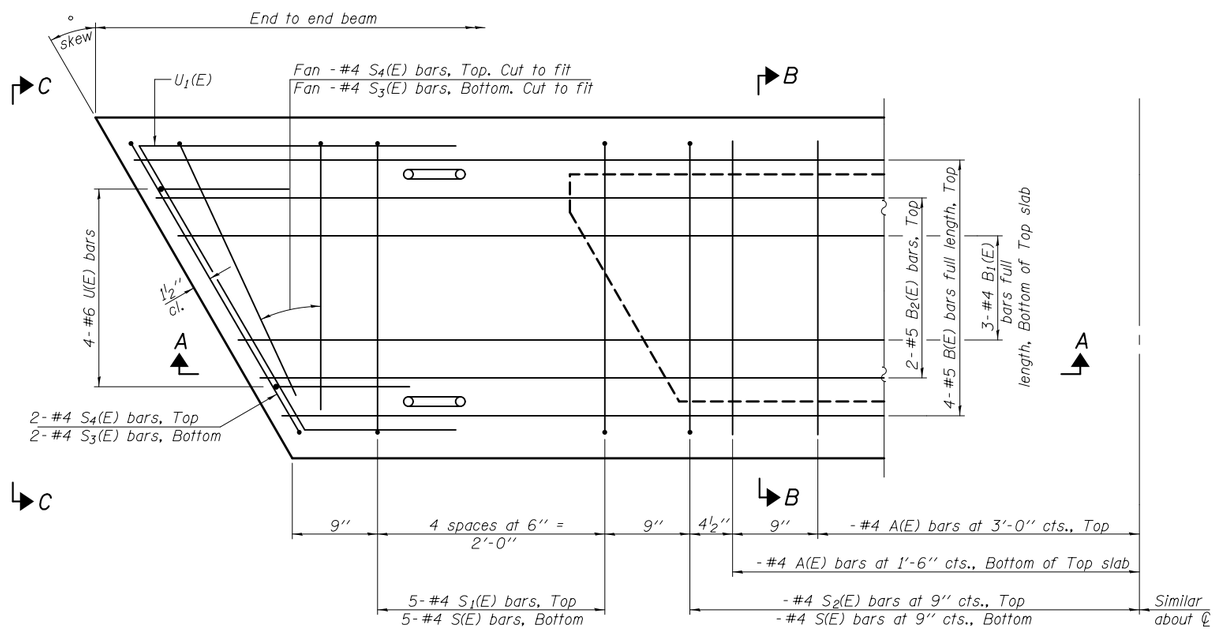

PLAN VIEW

Note: Spacing of S(E) and $S_2(E)$ bars may be adjusted up to 4'' in the immediate area of the transverse tie diaphragms to miss the block outs for the transverse ties.

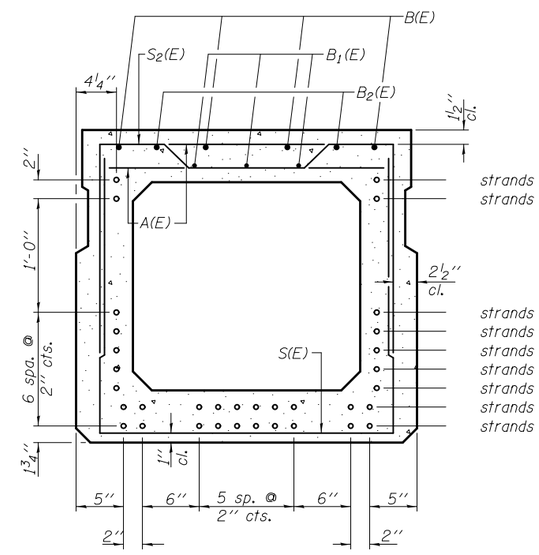

SECTION B-B

(Showing reinforcement and permissible strand locations)

Note: Place the number of strands specified in each row symmetrically about the centerline of beam in the permissible strand locations shown.

BAR LIST
ONE BEAM ONLY

(For information only)

Bar	No.	Size	Length	Shape
A(E)		#4	2'-7''	—
B(E)		#5		—
$B_1(E)$		#4		—
$B_2(E)$		#5	10'-0''	—
S(E)		#4	7'-8''	
$S_1(E)$	10	#4	6'-5''	
$S_2(E)$		#4	6'-8''	
$S_3(E)$		#4		
$S_4(E)$		#4		
U(E)	8	#6	5'-0''	
$U_1(E)$	6	#4		

Note: See sheet of for additional details and Bill of Material.

MINIMUM BAR LAP

#4 bar = 1'-11''
#5 bar = 2'-6''

PD-3336-R 6-8-15

FILE NAME =	USER NAME =	DESIGNED -	REVISED -	STATE OF ILLINOIS DEPARTMENT OF TRANSPORTATION	33'' x 36'' PPC DECK BEAM STRUCTURE NO.	F.A. RTE.	SECTION	COUNTY	TOTAL SHEETS	SHEET NO.
		CHECKED -	REVISED -							
	PLOT SCALE =	DRAWN -	REVISED -					CONTRACT NO.		
	PLOT DATE =	CHECKED -	REVISED -				ILLINOIS	FED. AID PROJECT		

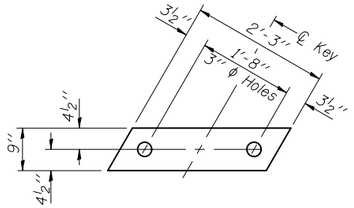

FABRIC BEARING PAD
(Interior)

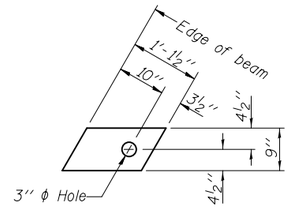

FABRIC BEARING PAD
(Exterior)

FIXED

Notes:
All bearing pads shall be 1'' thick.
Omit holes when using expansion bearings.
Expansion bearing pad shall be bonded to the substructure.

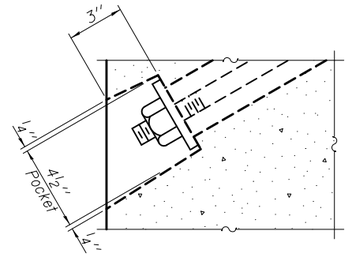

SECTION A-A

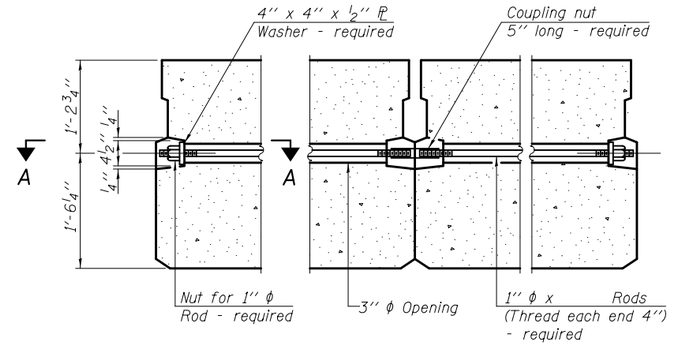

TYPICAL TRANSVERSE TIE ASSEMBLY

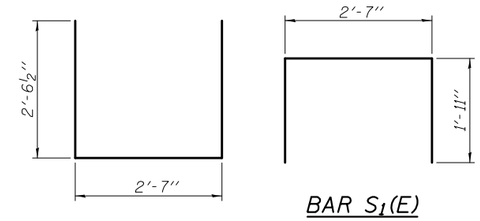

BAR S(E)

BAR S_1(E)

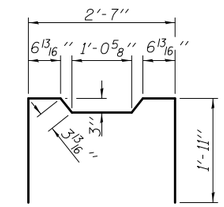

BAR S_2(E)

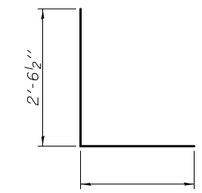

BAR S_3(E)

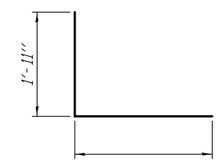

BAR S_4(E)

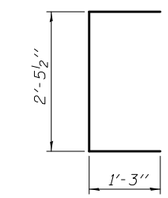

BAR U(E)

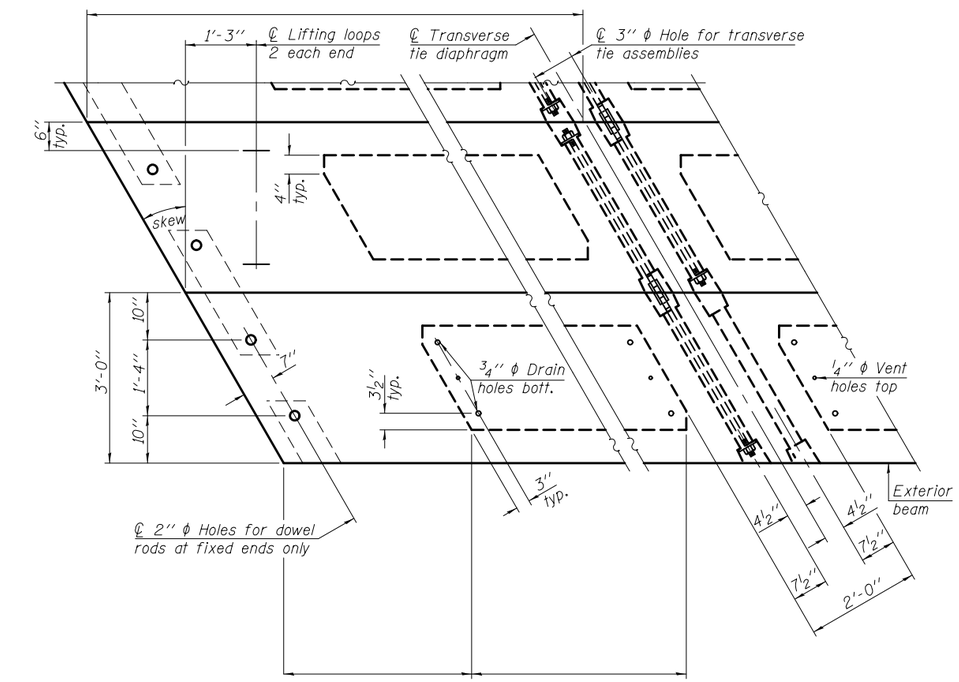

PLAN VIEW

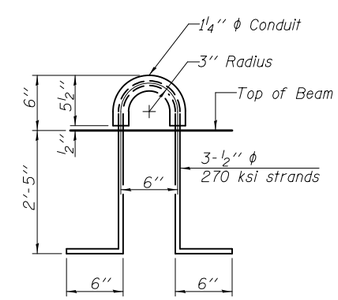

LIFTING LOOP DETAIL

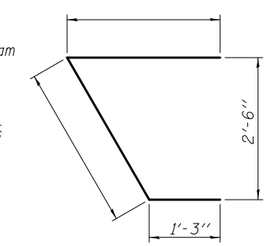

BAR U_1(E)

Note: Connect beams in pairs with the transverse tie configuration shown.

NOTES

Prestressing steel shall be uncoated high strength, low relaxation 7-wire strand, Grade 270. The nominal diameter shall be ½'' and the nominal cross-sectional area shall be 0.153 sq. in.

The 1'' ϕ rods in the transverse tie assembly shall be tightened to a snug fit and the threads set. Pockets on exterior faces of bridge shall be filled with grout after transverse tie assembly is in place.

Two ⅛'' fabric adjusting shims of the dimensions of the exterior bearing pad shall be provided for each bearing pad location.

A minimum 2½'' ϕ lifting pin shall be used to engage the lifting loops during handling.

Corrosion Inhibitor, per Article 1020.05(b)(10) and 1021.07 of the Standard Specifications, shall be used in the concrete for precast prestressed concrete deck beams.

Compressive strength of prestressed concrete, f'c, shall be 6000 psi.

Compressive strength of prestressed concrete at release, f'ci, shall be 5000 psi.

BILL OF MATERIAL

Precast Prestressed Conc. Deck Bms. (33'' depth)	Sq. Ft.	

PD-3336-RD 1-28-16

FILE NAME =	USER NAME =	DESIGNED -	REVISED -
		CHECKED -	REVISED -
	PLOT SCALE =	DRAWN -	REVISED -
	PLOT DATE =	CHECKED -	REVISED -

STATE OF ILLINOIS
DEPARTMENT OF TRANSPORTATION

33'' x 36'' PPC DECK BEAM DETAILS
STRUCTURE NO.

F.A. RTE.	SECTION	COUNTY	TOTAL SHEETS	SHEET NO.

CONTRACT NO.

ILLINOIS FED. AID PROJECT

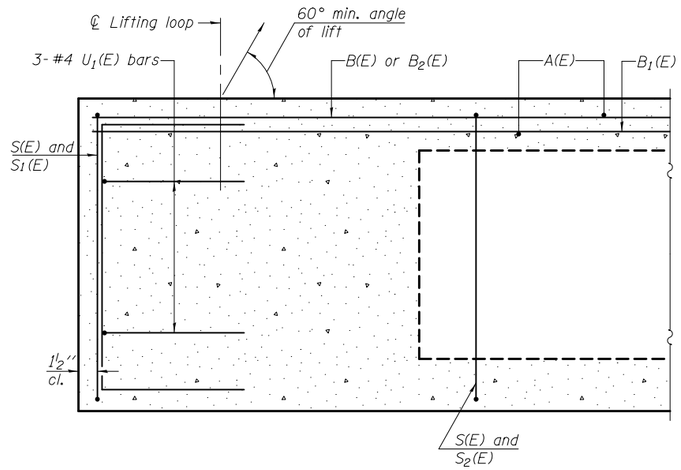

SECTION A-A

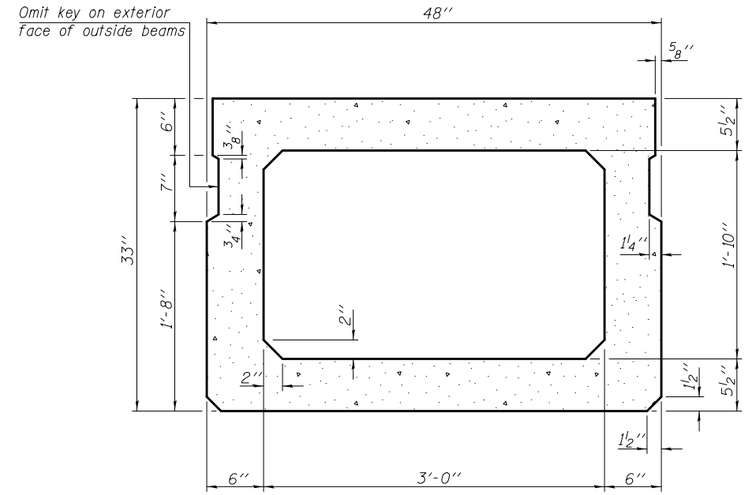

SECTION B-B
(Showing dimensions)

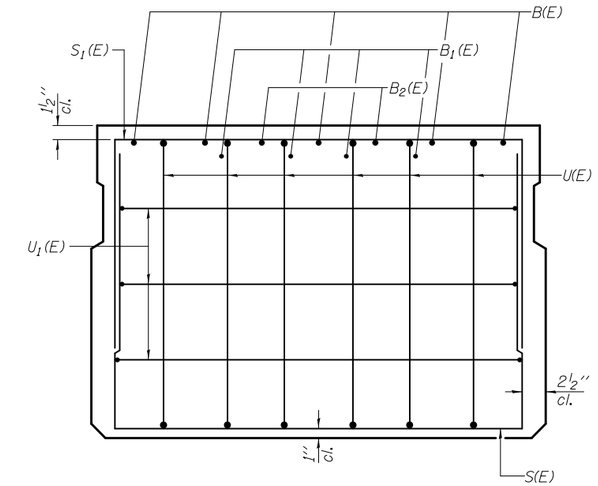

VIEW C-C

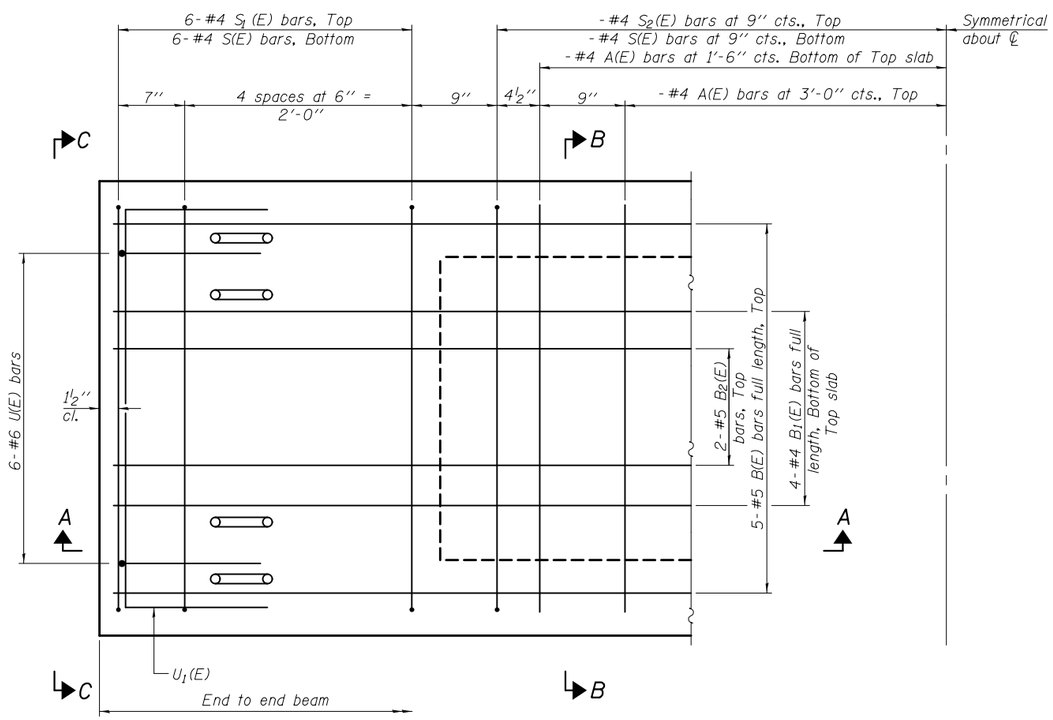

PLAN VIEW

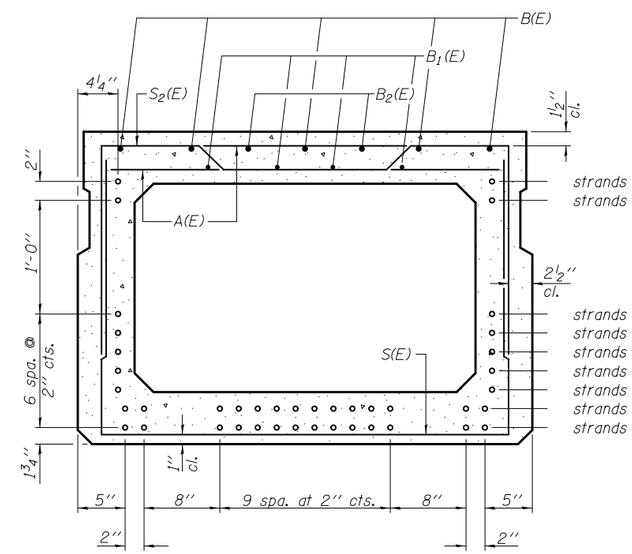

SECTION B-B
(Showing reinforcement and permissible strand locations)

Note: Place the number of strands specified in each row symmetrically about the centerline of beam in the permissible strand locations shown.

BAR LIST
ONE BEAM ONLY
(For information only)

Bar	No.	Size	Length	Shape
A(E)		#4	3′-7″	—
B(E)		#5		—
B_1(E)		#4		—
B_2(E)		#5	10′-0″	—
S(E)		#4	8′-8″	⊔
S_1(E)	12	#4	7′-5″	⊓
S_2(E)		#4	7′-8″	⊓
U(E)	12	#6	5′-0″	⊏
U_1(E)	6	#4	6′-0″	⊓

Note: See sheet of for additional details and Bill of Material.

Note: Spacing of S(E) and S_2(E) bars may be adjusted up to 4″ in the immediate area of the transverse tie diaphragms to miss the block outs for the transverse ties.

MINIMUM BAR LAP
#4 bar = 1′-11″
#5 bar = 2′-6″

PD-3348-0 6-8-15

FILE NAME =	USER NAME =	DESIGNED -	REVISED -
		CHECKED -	REVISED -
	PLOT SCALE =	DRAWN -	REVISED -
	PLOT DATE =	CHECKED -	REVISED -

STATE OF ILLINOIS
DEPARTMENT OF TRANSPORTATION

33″ x 48″ PPC DECK BEAM
STRUCTURE NO.

F.A. RTE.	SECTION	COUNTY	TOTAL SHEETS	SHEET NO.

CONTRACT NO.
ILLINOIS FED. AID PROJECT

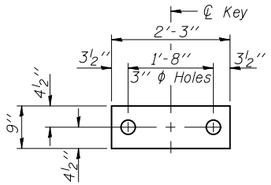

FABRIC BEARING PAD
(Interior)

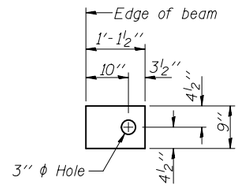

FABRIC BEARING PAD
(Exterior)

FIXED

Notes:
All bearing pads shall be 1" thick.
Omit holes when using expansion bearings.
Expansion bearing pad shall be bonded to the substructure.

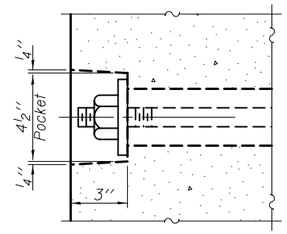

SECTION A-A

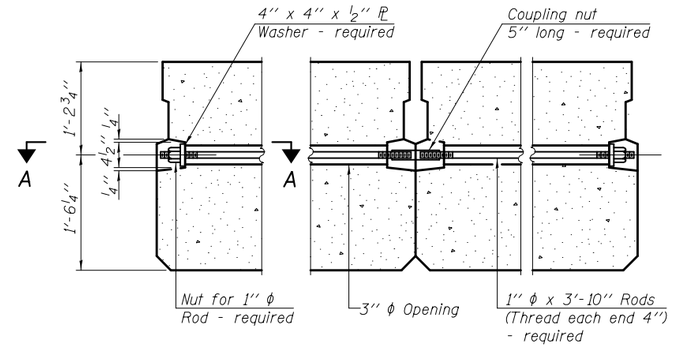

TYPICAL TRANSVERSE TIE ASSEMBLY

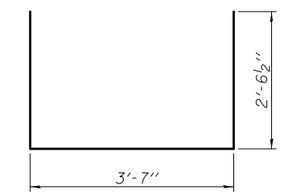

BAR S(E)

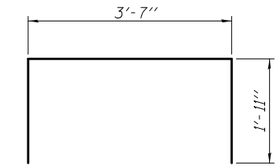

BAR S_1(E)

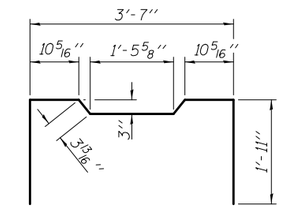

BAR S_2(E)

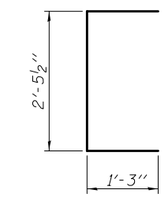

BAR U(E)

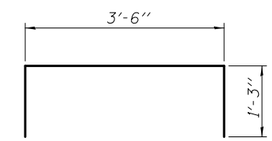

BAR U_1(E)

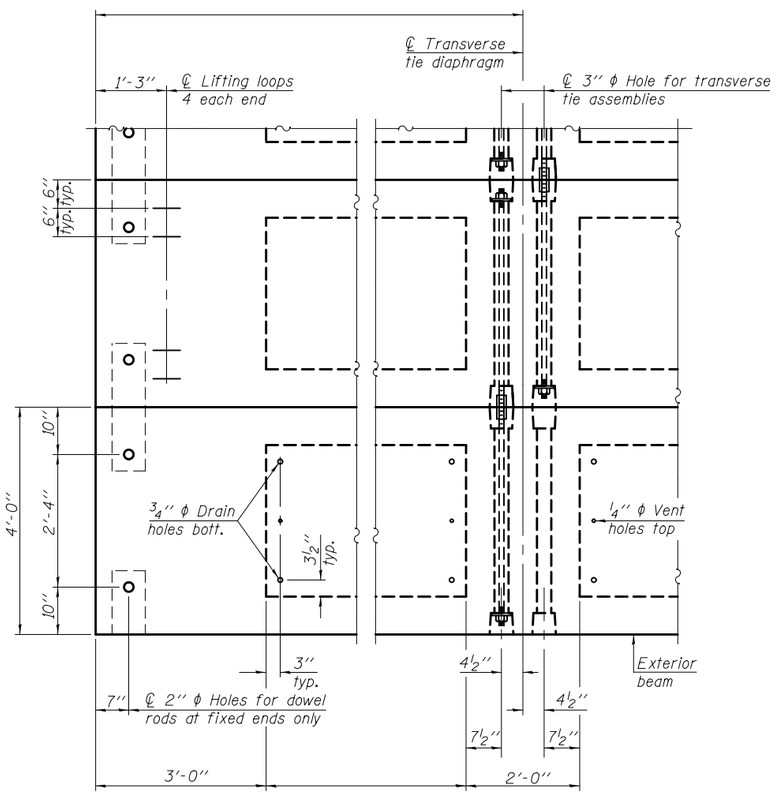

PLAN VIEW

Note: Connect beams in pairs with the transverse tie configuration shown.

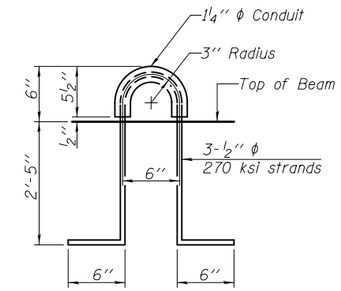

LIFTING LOOP DETAIL

NOTES

Prestressing steel shall be uncoated high strength, low relaxation 7-wire strand, Grade 270. The nominal diameter shall be ½" and the nominal cross-sectional area shall be 0.153 sq. in.

The 1" ϕ rods in the transverse tie assembly shall be tightened to a snug fit and the threads set. Pockets on exterior faces of bridge shall be filled with grout after transverse tie assembly is in place.

Two ⅛" fabric adjusting shims of the dimensions of the exterior bearing pad shall be provided for each bearing pad location.

A minimum 2½" ϕ lifting pin shall be used to engage the lifting loops during handling.

Corrosion Inhibitor, per Article 1020.05(b)(10) and 1021.07 of the Standard Specifications, shall be used in the concrete for precast prestressed concrete deck beams.

Compressive strength of prestressed concrete, f'c, shall be 6000 psi.

Compressive strength of prestressed concrete at release, f'ci, shall be 5000 psi.

BILL OF MATERIAL

Precast Prestressed Conc. Deck Bms. (33" depth)	Sq. Ft.	

PD-3348-0D 1-28-16

FILE NAME =	USER NAME =	DESIGNED -	REVISED -	STATE OF ILLINOIS DEPARTMENT OF TRANSPORTATION	33" x 48" PPC DECK BEAM DETAILS STRUCTURE NO.	F.A. RTE.	SECTION	COUNTY	TOTAL SHEETS / SHEET NO.
		CHECKED -	REVISED -						
	PLOT SCALE =	DRAWN -	REVISED -					CONTRACT NO.	
	PLOT DATE =	CHECKED -	REVISED -				ILLINOIS	FED. AID PROJECT	

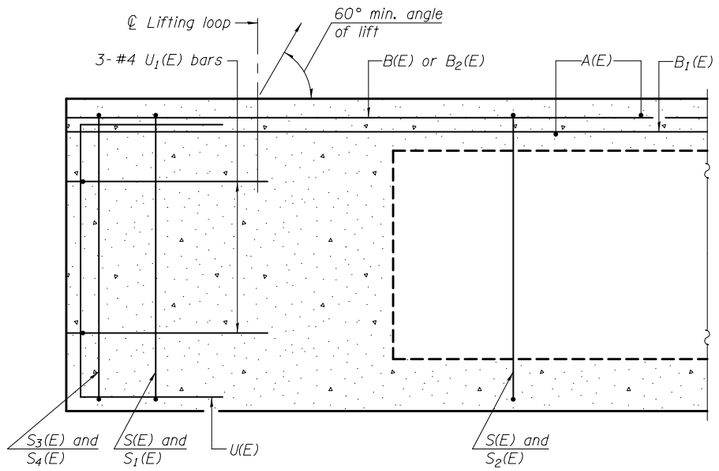

SECTION A-A

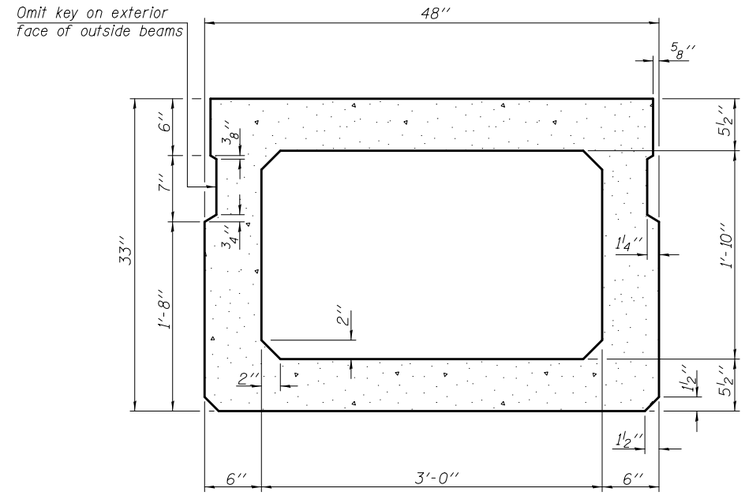

SECTION B-B
(Showing dimensions)

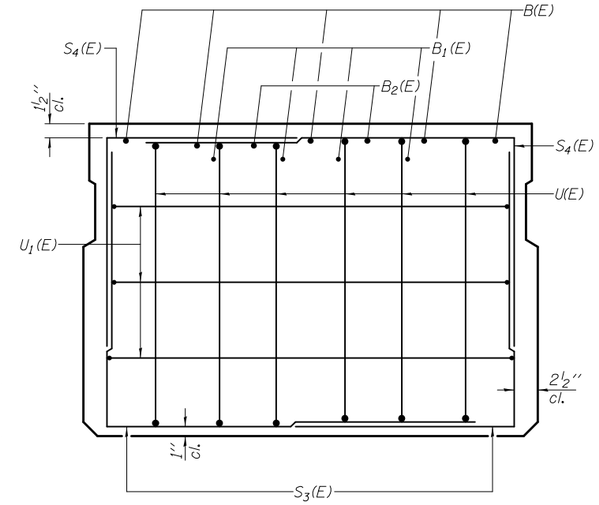

VIEW C-C

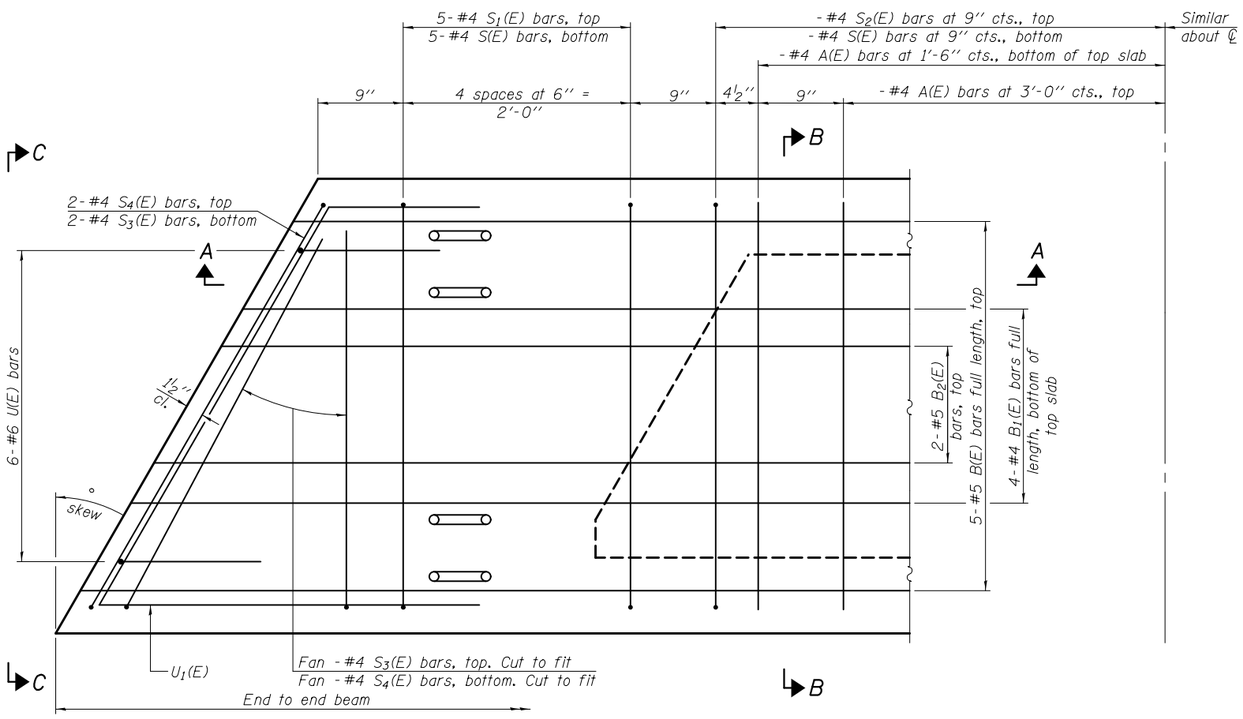

PLAN VIEW

Note: Spacing of S(E) and S_2(E) bars may be adjusted up to 4″ in the immediate area of the transverse tie diaphragms to miss the block outs for the transverse ties.

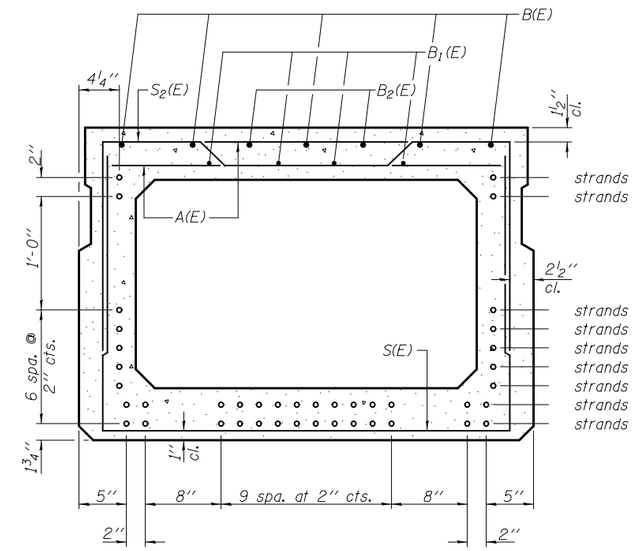

SECTION B-B
(Showing reinforcement and permissible strand locations)

Note: Place the number of strands specified in each row symmetrically about the centerline of beam in the permissible strand locations shown.

BAR LIST
ONE BEAM ONLY
(For information only)

Bar	No.	Size	Length	Shape
A(E)		#4	3′-7″	—
B(E)		#5		—
B_1(E)		#4		—
B_2(E)		#5	10′-0″	—
S(E)		#4	8′-8″	⊔
S_1(E)	10	#4	7′-5″	⊓
S_2(E)		#4	7′-8″	⊓
S_3(E)		#4		⌋
S_4(E)		#4		⌋
U(E)	12	#6	5′-0″	⊏
U_1(E)	6	#4		⊏

Note: See sheet of for additional details and Bill of Material.

MINIMUM BAR LAP
#4 bar = 1′-11″
#5 bar = 2′-6″

PD-3348-L 6-8-15

FILE NAME =	USER NAME =	DESIGNED -	REVISED -	STATE OF ILLINOIS DEPARTMENT OF TRANSPORTATION	33″ x 48″ PPC DECK BEAM STRUCTURE NO.	F.A. RTE.	SECTION	COUNTY	TOTAL SHEETS	SHEET NO.
		CHECKED -	REVISED -							
	PLOT SCALE =	DRAWN -	REVISED -			CONTRACT NO.				
	PLOT DATE =	CHECKED -	REVISED -			ILLINOIS FED. AID PROJECT				

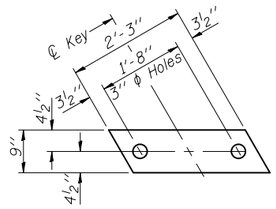

FABRIC BEARING PAD
(Interior)

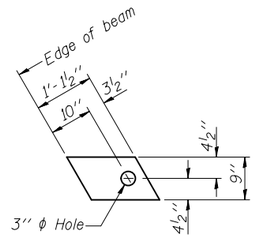

FABRIC BEARING PAD
(Exterior)

FIXED

Notes:
All bearing pads shall be 1" thick.
Omit holes when using expansion bearings.
Expansion bearing pad shall be bonded to the substructure.

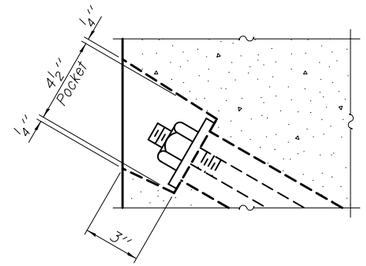

SECTION A-A

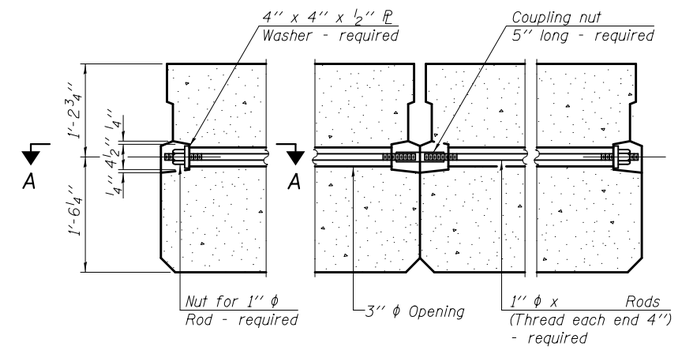

TYPICAL TRANSVERSE TIE ASSEMBLY

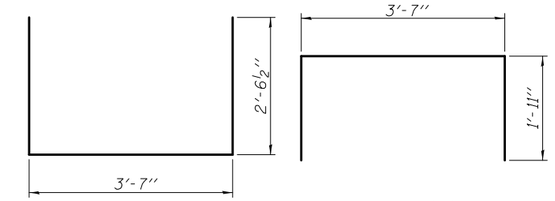

BAR S(E)

BAR S_1(E)

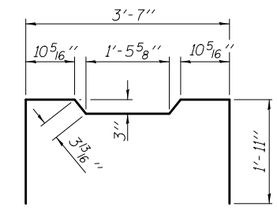

BAR S_2(E)

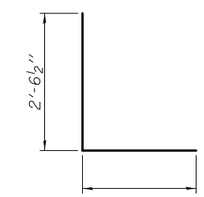

BAR S_3(E)

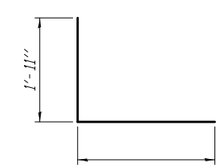

BAR S_4(E)

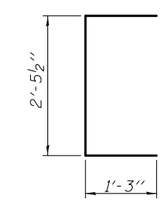

BAR U(E)

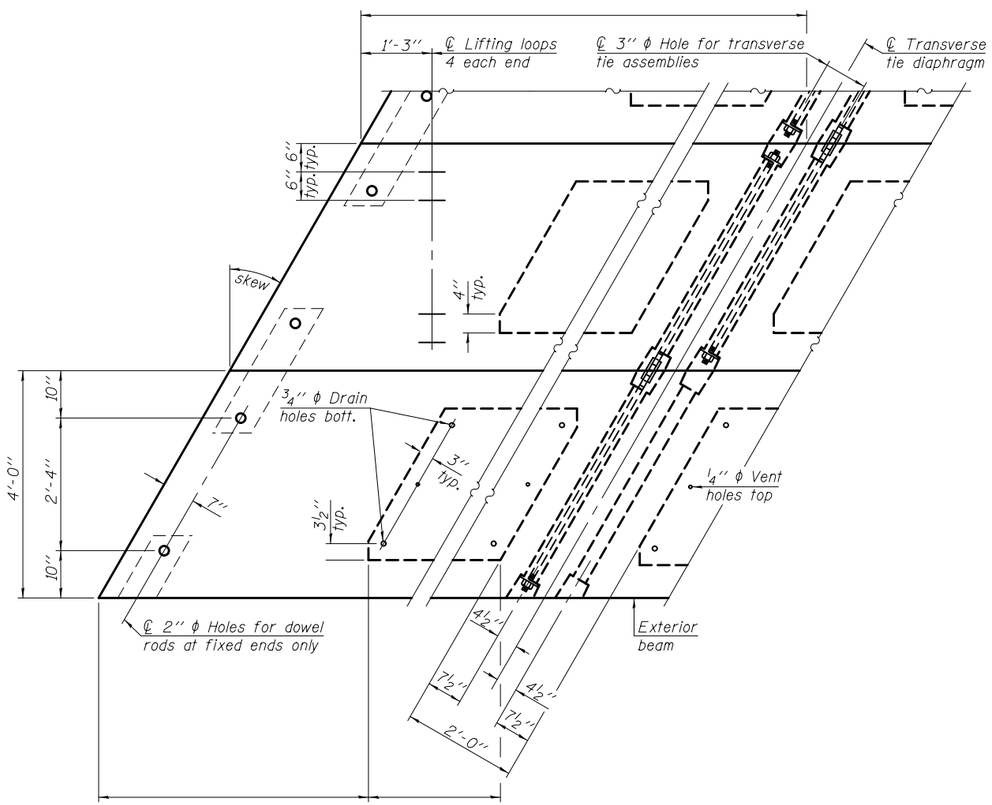

PLAN VIEW

Note: Connect beams in pairs with the transverse tie configuration shown.

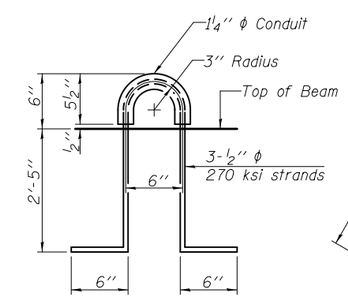

LIFTING LOOP DETAIL

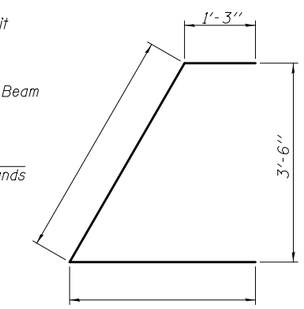

BAR U_1(E)

NOTES

Prestressing steel shall be uncoated high strength, low relaxation 7-wire strand, Grade 270. The nominal diameter shall be ½" and the nominal cross-sectional area shall be 0.153 sq. in.

The 1" ϕ rods in the transverse tie assembly shall be tightened to a snug fit and the threads set. Pockets on exterior faces of bridge shall be filled with grout after transverse tie assembly is in place.

Two ⅛" fabric adjusting shims of the dimensions of the exterior bearing pad shall be provided for each bearing pad location.

A minimum 2½" ϕ lifting pin shall be used to engage the lifting loops during handling.

Corrosion Inhibitor, per Article 1020.05(b)(10) and 1021.07 of the Standard Specifications, shall be used in the concrete for precast prestressed concrete deck beams.

Compressive strength of prestressed concrete, f'c, shall be 6000 psi.

Compressive strength of prestressed concrete at release, f'ci, shall be 5000 psi.

BILL OF MATERIAL

Precast Prestressed Conc. Deck Bms. (33" depth)	Sq. Ft.	

PD-3348-LD 1-28-16

FILE NAME =	USER NAME =	DESIGNED -	REVISED -	STATE OF ILLINOIS DEPARTMENT OF TRANSPORTATION	33" x 48" PPC DECK BEAM DETAILS STRUCTURE NO.	F.A. RTE.	SECTION	COUNTY	TOTAL SHEETS	SHEET NO.
		CHECKED -	REVISED -							
	PLOT SCALE =	DRAWN -	REVISED -					CONTRACT NO.		
	PLOT DATE =	CHECKED -	REVISED -				ILLINOIS	FED. AID PROJECT		

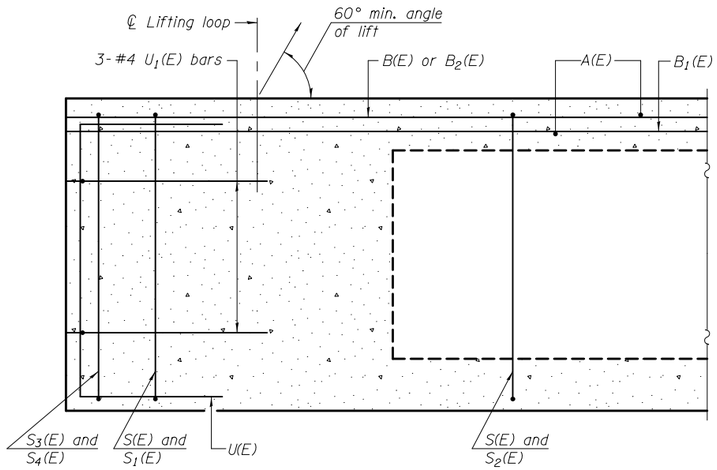

SECTION A-A

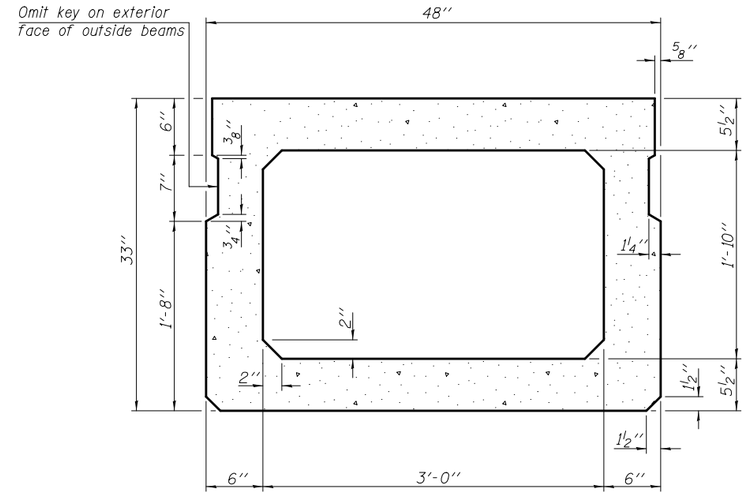

SECTION B-B

(Showing dimensions)

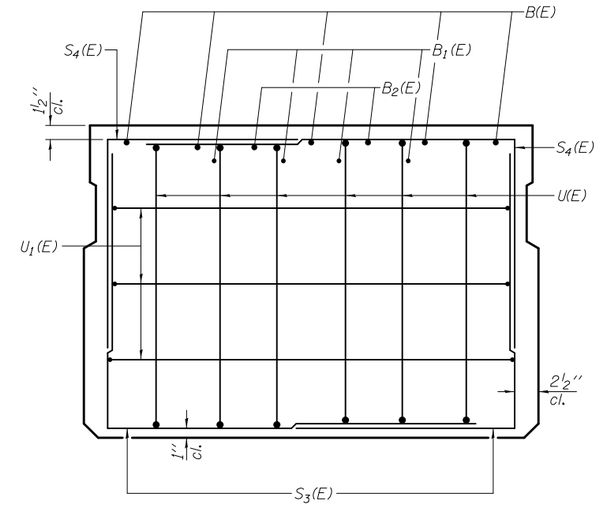

VIEW C-C

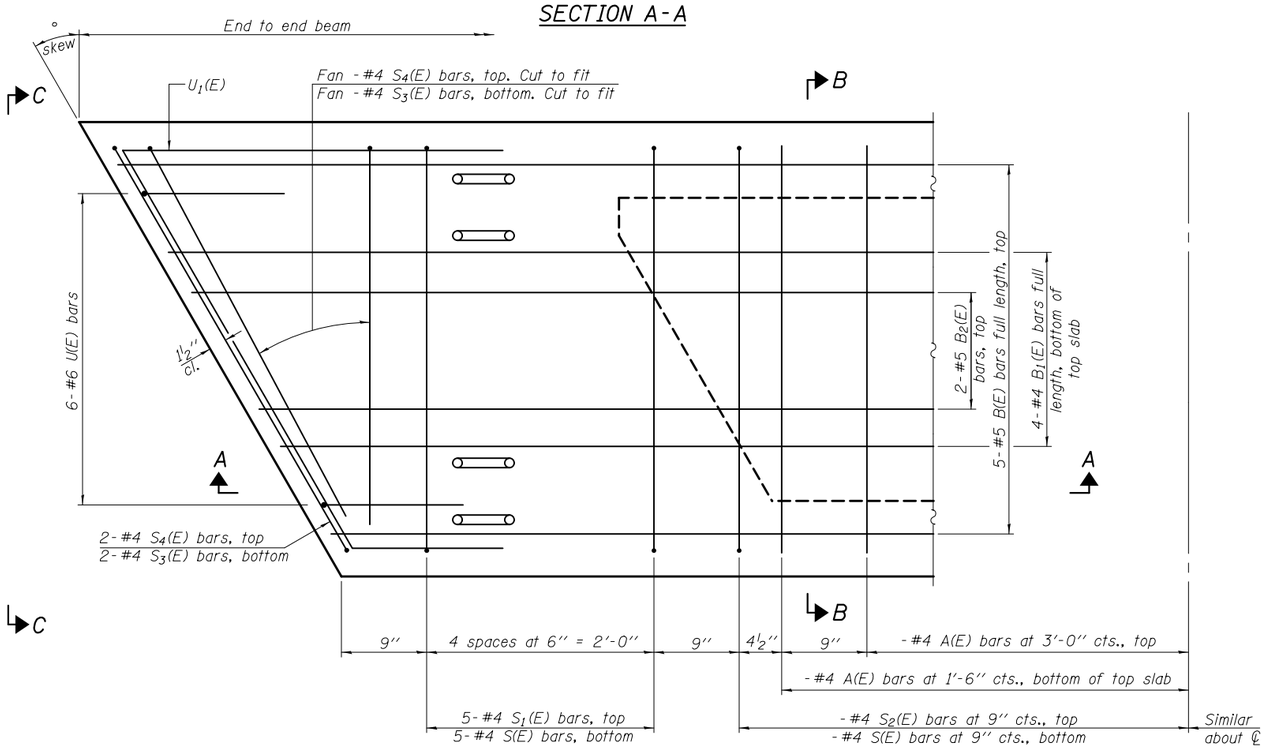

PLAN VIEW

Note: Spacing of S(E) and S_2(E) bars may be adjusted up to 4″ in the immediate area of the transverse tie diaphragms to miss the block outs for the transverse ties.

MINIMUM BAR LAP

#4 bar = 1′-11″
#5 bar = 2′-6″

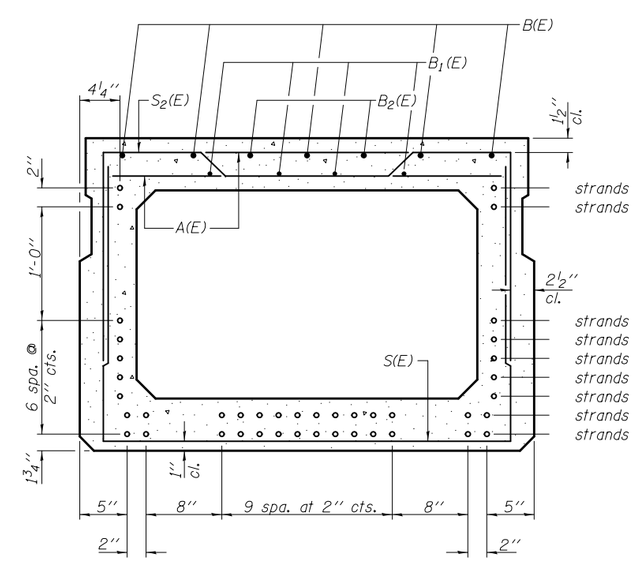

SECTION B-B

(Showing reinforcement and permissible strand locations)

Note: Place the number of strands specified in each row symmetrically about the centerline of beam in the permissible strand locations shown.

BAR LIST
ONE BEAM ONLY

(For information only)

Bar	No.	Size	Length	Shape
A(E)		#4	3′-7″	—
B(E)		#5		—
B_1(E)		#4		—
B_2(E)		#5	10′-0″	—
S(E)		#4	8′-8″	⊔
S_1(E)	10	#4	7′-5″	⊐
S_2(E)		#4	7′-8″	⊐
S_3(E)		#4		⊔
S_4(E)		#4		⊔
U(E)	12	#6	5′-0″	⊓
U_1(E)	6	#4		⊓

Note: See sheet of for additional details and Bill of Material.

PD-3348-R 6-8-15

FILE NAME =	USER NAME =	DESIGNED -	REVISED -	STATE OF ILLINOIS DEPARTMENT OF TRANSPORTATION	33″ x 48″ PPC DECK BEAM STRUCTURE NO.	F.A. RTE.	SECTION	COUNTY	TOTAL SHEETS	SHEET NO.
		CHECKED -	REVISED -							
	PLOT SCALE =	DRAWN -	REVISED -			CONTRACT NO.				
	PLOT DATE =	CHECKED -	REVISED -			ILLINOIS FED. AID PROJECT				

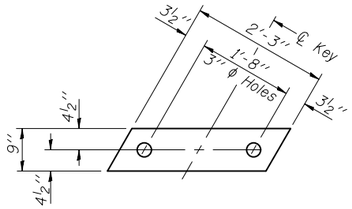

FABRIC BEARING PAD
(Interior)

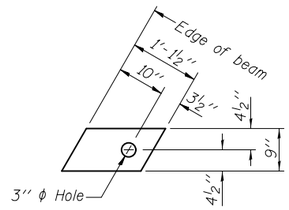

FABRIC BEARING PAD
(Exterior)

FIXED

Notes:
All bearing pads shall be 1'' thick.
Omit holes when using expansion bearings.
Expansion bearing pad shall be bonded to the substructure.

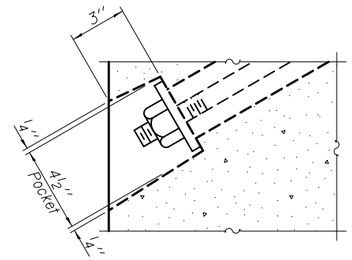

SECTION A-A

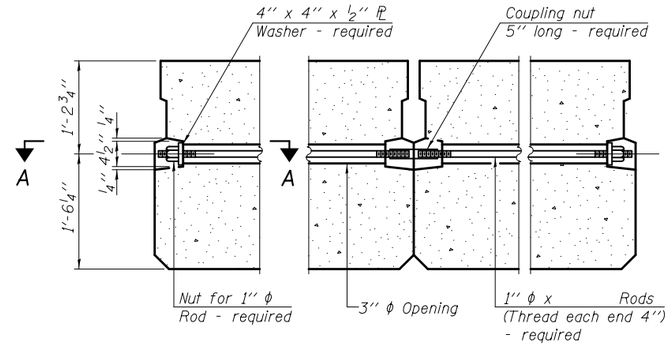

TYPICAL TRANSVERSE TIE ASSEMBLY

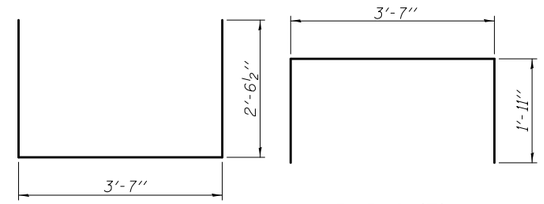

BAR S(E)

BAR S1(E)

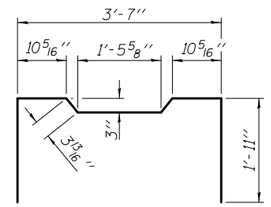

BAR S2(E)

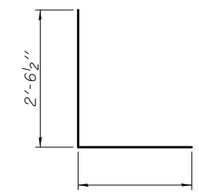

BAR S3(E)

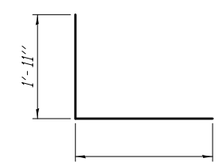

BAR S4(E)

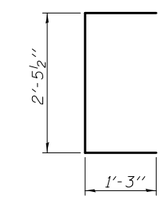

BAR U(E)

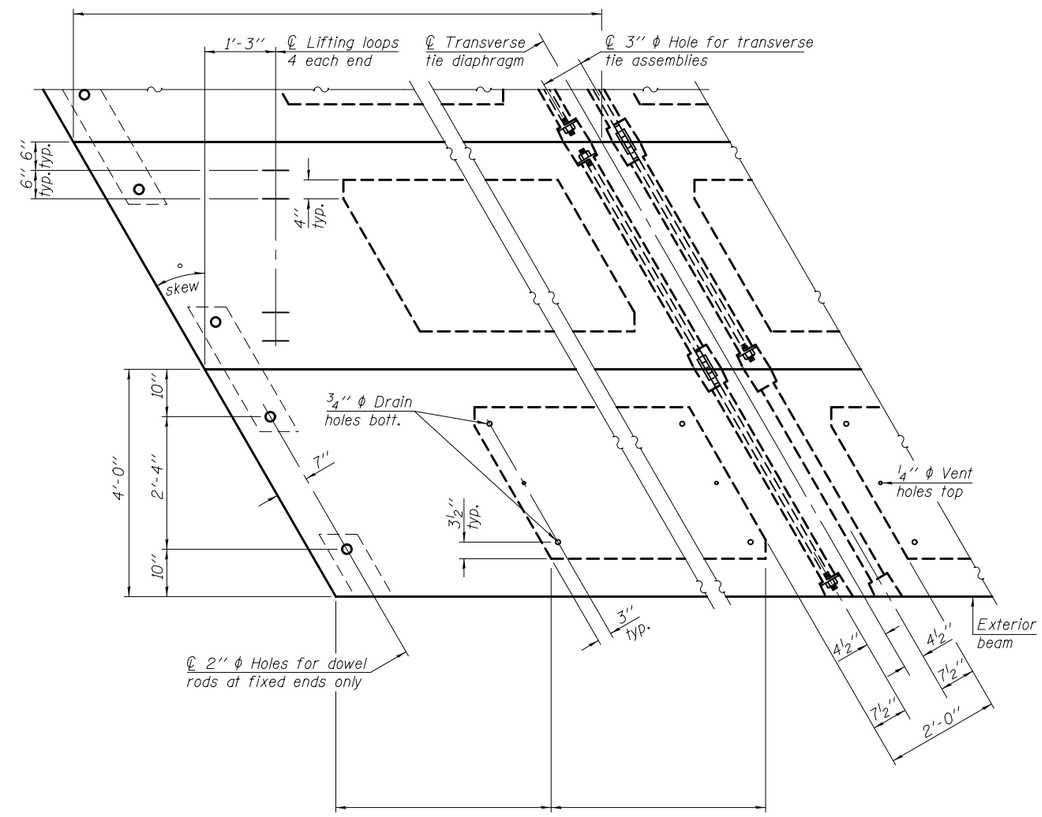

PLAN VIEW

Note: Connect beams in pairs with the transverse tie configuration shown.

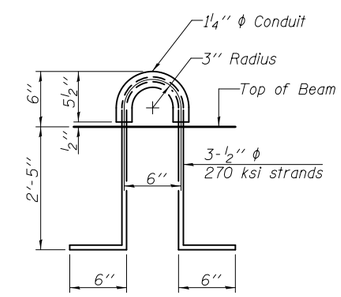

LIFTING LOOP DETAIL

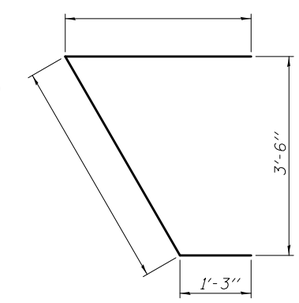

BAR U1(E)

NOTES

Prestressing steel shall be uncoated high strength, low relaxation 7-wire strand, Grade 270. The nominal diameter shall be ½'' and the nominal cross-sectional area shall be 0.153 sq. in.

The 1'' ϕ rods in the transverse tie assembly shall be tightened to a snug fit and the threads set. Pockets on exterior faces of bridge shall be filled with grout after transverse tie assembly is in place.

Two ⅛'' fabric adjusting shims of the dimensions of the exterior bearing pad shall be provided for each bearing pad location.

A minimum 2½'' ϕ lifting pin shall be used to engage the lifting loops during handling.

Corrosion Inhibitor, per Article 1020.05(b)(10) and 1021.07 of the Standard Specifications, shall be used in the concrete for precast prestressed concrete deck beams.

Compressive strength of prestressed concrete, f'c, shall be 6000 psi.

Compressive strength of prestressed concrete at release, f'ci, shall be 5000 psi.

BILL OF MATERIAL

Precast Prestressed Conc. Deck Bms. (33'' depth)	Sq. Ft.	

PD-3348-RD 1-28-16

FILE NAME =	USER NAME =	DESIGNED -	REVISED -	STATE OF ILLINOIS DEPARTMENT OF TRANSPORTATION	33'' x 48'' PPC DECK BEAM DETAILS STRUCTURE NO.	F.A. RTE.	SECTION	COUNTY	TOTAL SHEETS / SHEET NO.
		CHECKED -	REVISED -						
	PLOT SCALE =	DRAWN -	REVISED -					CONTRACT NO.	
	PLOT DATE =	CHECKED -	REVISED -				ILLINOIS	FED. AID PROJECT	

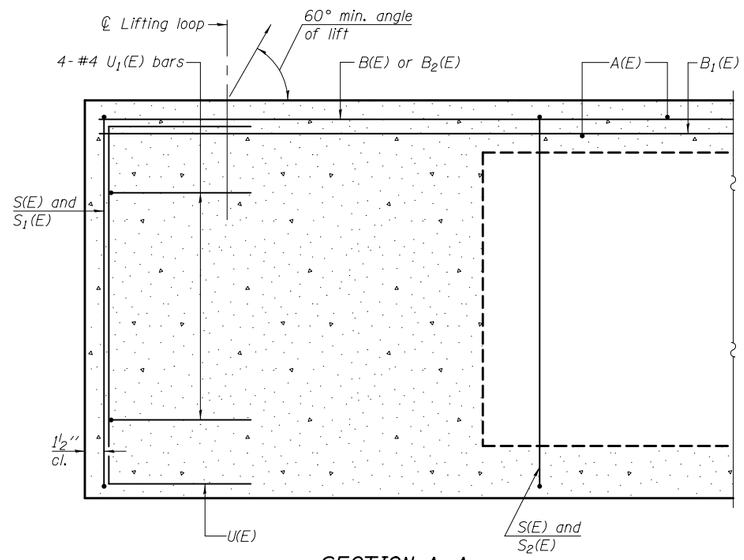

SECTION A-A

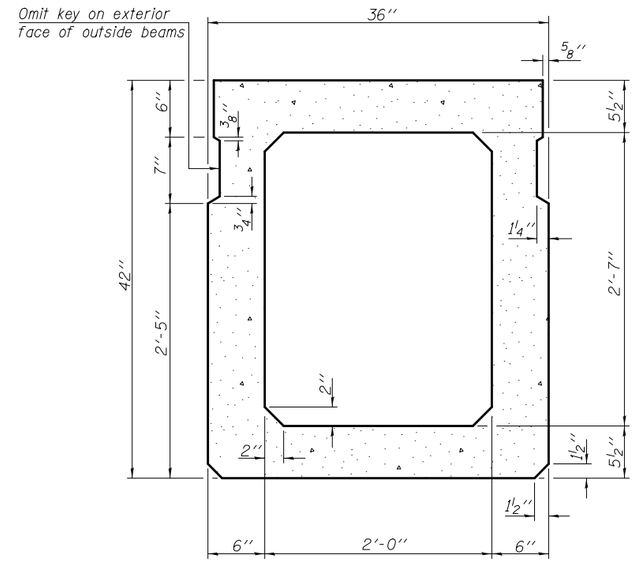

SECTION B-B
(Showing dimensions)

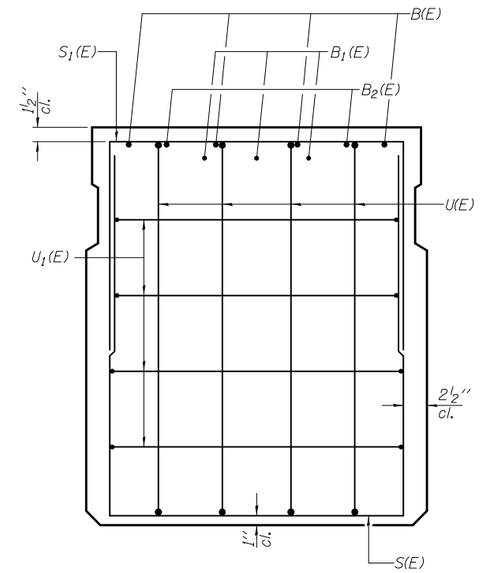

VIEW C-C

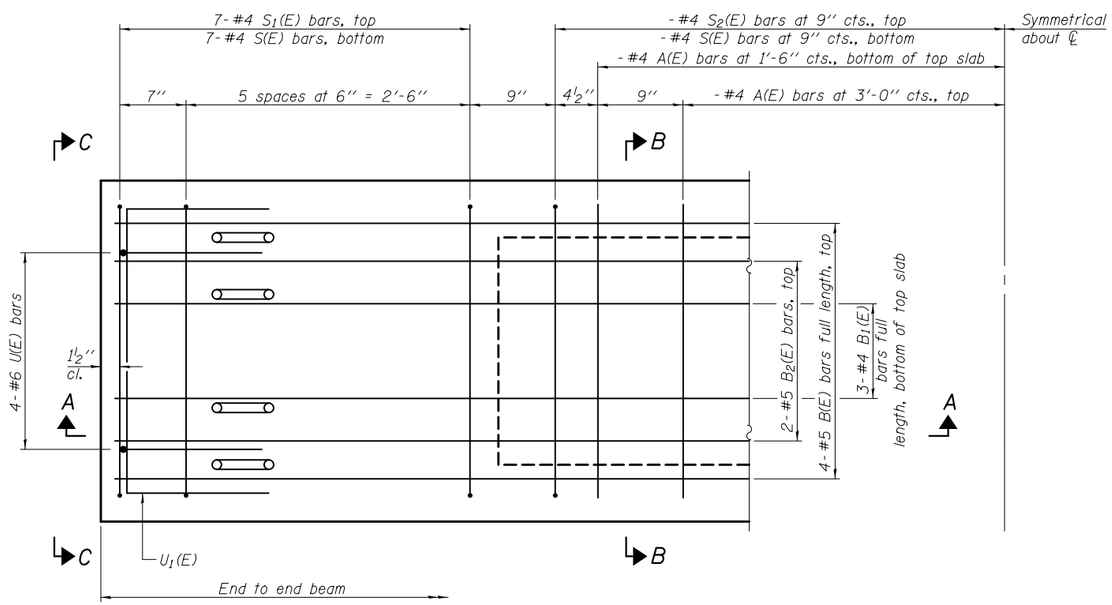

PLAN VIEW

Note: Spacing of S(E) and S_2(E) bars may be adjusted up to 4″ in the immediate area of the transverse tie diaphragms to miss the block outs for the transverse ties.

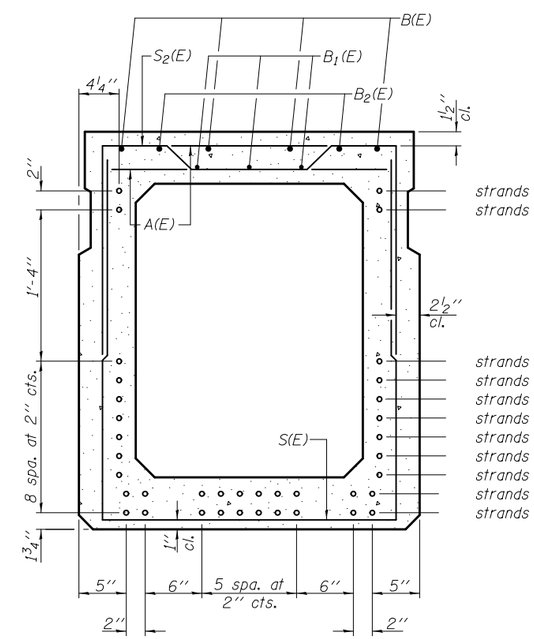

SECTION B-B
(Showing reinforcement and permissible strand locations)
Note: Place the number of strands specified in each row symmetrically about the centerline of beam in the permissible strand locations shown.

BAR LIST
ONE BEAM ONLY
(For information only)

Bar	No.	Size	Length	Shape
A(E)		#4	2′-7″	—
B(E)		#5		—
B_1(E)		#4		—
B_2(E)		#5	10′-0″	—
S(E)		#4	9′-2″	⊔
S_1(E)	14	#4	6′-5″	⊓
S_2(E)		#4	6′-8″	⊓
U(E)	8	#6	5′-9″	⊏
U_1(E)	8	#4	5′-0″	⊓

Note: See sheet of for additional details and Bill of Material.

MINIMUM BAR LAP
#4 bar = 1′-11″
#5 bar = 2′-6″

PD-4236-0 6-8-15

FILE NAME =	USER NAME =	DESIGNED -	REVISED -	STATE OF ILLINOIS DEPARTMENT OF TRANSPORTATION	42″ x 36″ PPC DECK BEAM STRUCTURE NO.	F.A. RTE.	SECTION	COUNTY	TOTAL SHEETS	SHEET NO.
		CHECKED -	REVISED -							
	PLOT SCALE =	DRAWN -	REVISED -					CONTRACT NO.		
	PLOT DATE =	CHECKED -	REVISED -				ILLINOIS	FED. AID PROJECT		

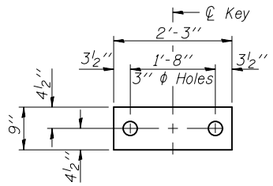

FABRIC BEARING PAD
(Interior)

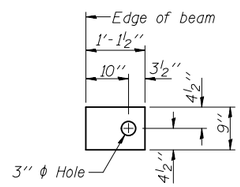

FABRIC BEARING PAD
(Exterior)

FIXED

Notes:
All bearing pads shall be 1" thick.
Omit holes when using expansion bearings.
Expansion bearing pad shall be bonded to the substructure.

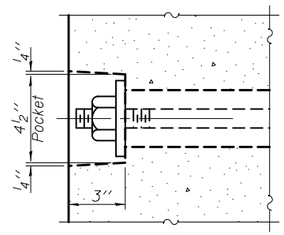

SECTION A-A

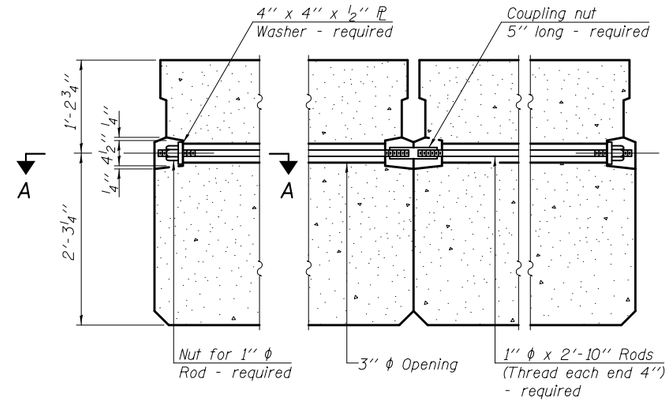

TYPICAL TRANSVERSE TIE ASSEMBLY

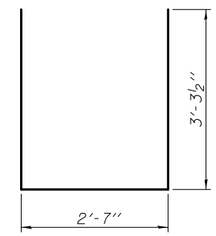

BAR S(E)

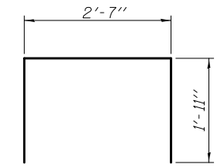

BAR S_1(E)

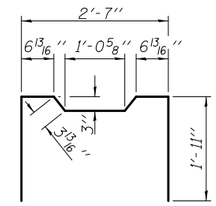

BAR S_2(E)

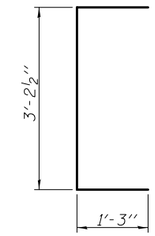

BAR U(E)

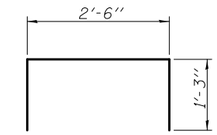

BAR U_1(E)

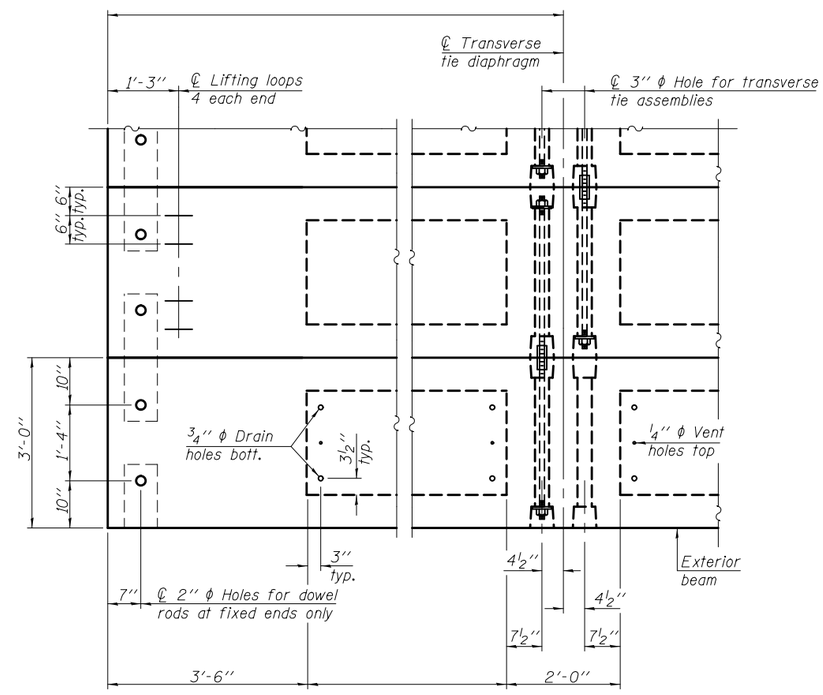

PLAN VIEW

Note: Connect beams in pairs with the transverse tie configuration shown.

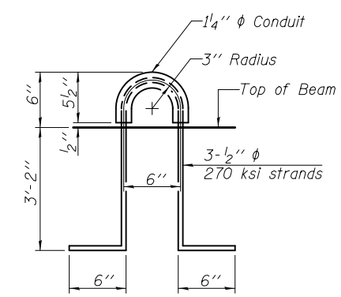

LIFTING LOOP DETAIL

NOTES

Prestressing steel shall be uncoated high strength, low relaxation 7-wire strand, Grade 270. The nominal diameter shall be ½" and the nominal cross-sectional area shall be 0.153 sq. in.

The 1" ϕ rods in the transverse tie assembly shall be tightened to a snug fit and the threads set. Pockets on exterior faces of bridge shall be filled with grout after transverse tie assembly is in place.

Two ⅛" fabric adjusting shims of the dimensions of the exterior bearing pad shall be provided for each bearing pad location.

A minimum 2½" ϕ lifting pin shall be used to engage the lifting loops during handling.

Corrosion Inhibitor, per Article 1020.05(b)(10) and 1021.07 of the Standard Specifications, shall be used in the concrete for precast prestressed concrete deck beams.

Compressive strength of prestressed concrete, f'c, shall be 6000 psi.

Compressive strength of prestressed concrete at release, f'ci, shall be 5000 psi.

BILL OF MATERIAL

Precast Prestressed Conc. Deck Bms. (42" depth)	Sq. Ft.	

PD-4236-0D 1-28-16

FILE NAME =	USER NAME =	DESIGNED -	REVISED -
		CHECKED -	REVISED -
	PLOT SCALE =	DRAWN -	REVISED -
	PLOT DATE =	CHECKED -	REVISED -

STATE OF ILLINOIS
DEPARTMENT OF TRANSPORTATION

42" x 36" PPC DECK BEAM DETAILS
STRUCTURE NO.

F.A. RTE.	SECTION	COUNTY	TOTAL SHEETS	SHEET NO.
		CONTRACT NO.		
	ILLINOIS	FED. AID PROJECT		

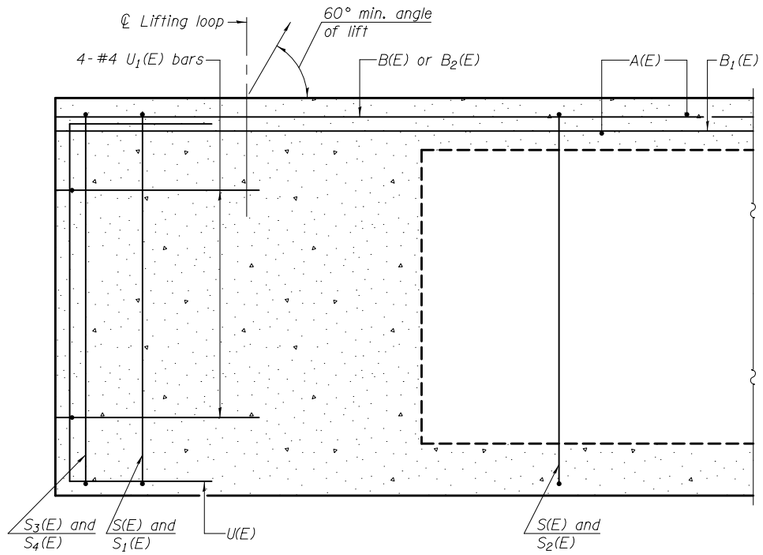

SECTION A-A

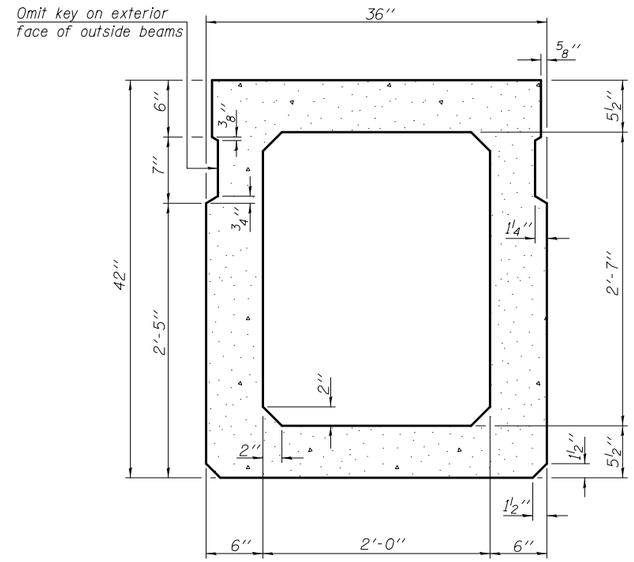

SECTION B-B
(Showing dimensions)

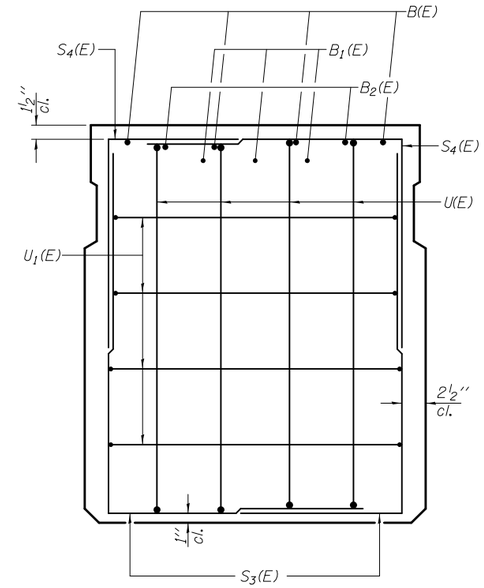

VIEW C-C

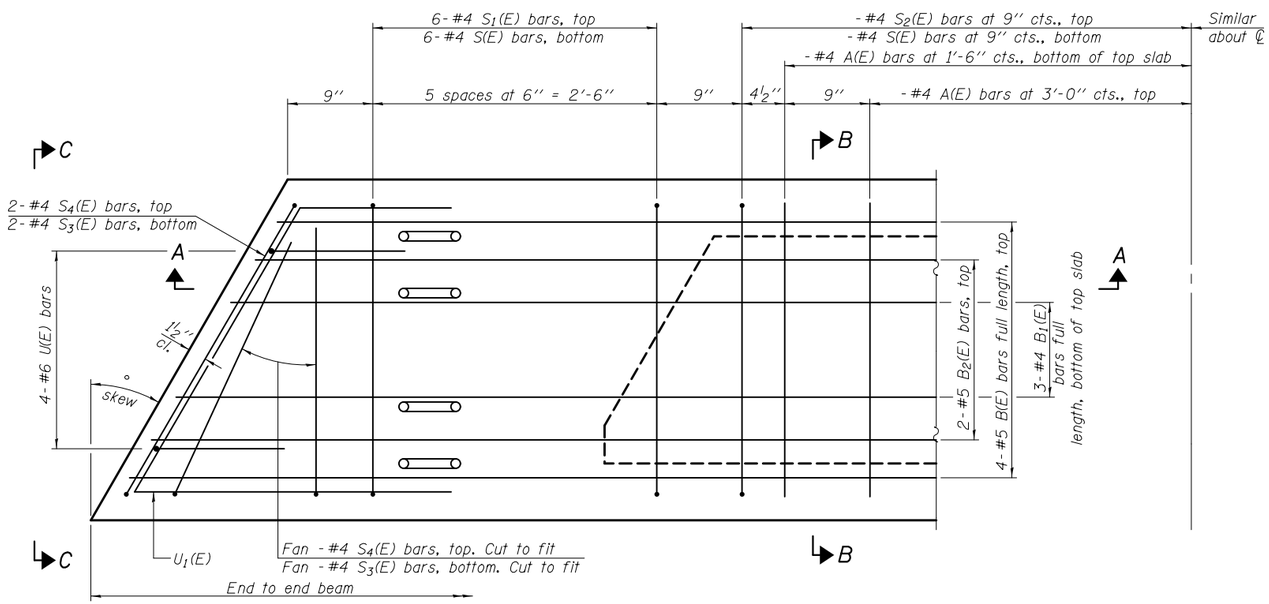

PLAN VIEW

Note: Spacing of S(E) and S2(E) bars may be adjusted up to 4'' in the immediate area of the transverse tie diaphragms to miss the block outs for the transverse ties.

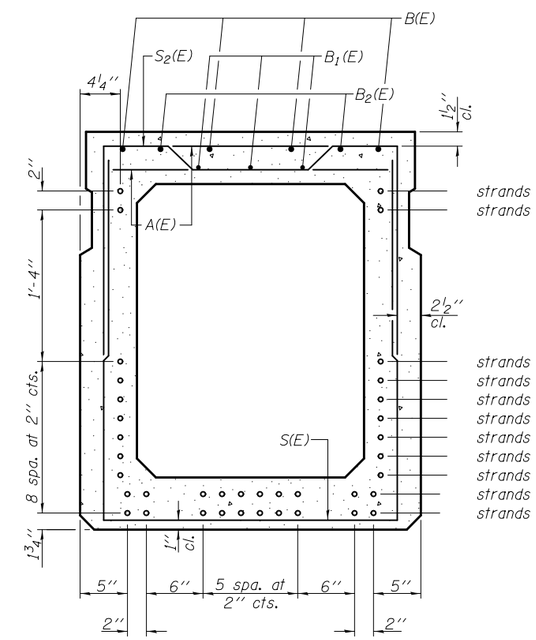

SECTION B-B
(Showing reinforcement and permissible strand locations)

Note: Place the number of strands specified in each row symmetrically about the centerline of beam in the permissible strand locations shown.

MINIMUM BAR LAP

#4 bar = 1'-11''
#5 bar = 2'-6''

BAR LIST
ONE BEAM ONLY
(For information only)

Bar	No.	Size	Length	Shape
A(E)		#4	2'-7''	—
B(E)		#5		—
B1(E)		#4		—
B2(E)		#5	10'-0''	—
S(E)		#4	9'-2''	⊔
S1(E)	12	#4	6'-5''	⊓
S2(E)		#4	6'-8''	⊓
S3(E)		#4		⊔
S4(E)		#4		⊔
U(E)	8	#6	5'-9''	⊏
U1(E)	8	#4		⊏

Note: See sheet of for additional details and Bill of Material.

PD-4236-L 6-8-15

FILE NAME =	USER NAME =	DESIGNED -	REVISED -
		CHECKED -	REVISED -
	PLOT SCALE =	DRAWN -	REVISED -
	PLOT DATE =	CHECKED -	REVISED -

STATE OF ILLINOIS
DEPARTMENT OF TRANSPORTATION

42'' x 36'' PPC DECK BEAM
STRUCTURE NO.

F.A. RTE.	SECTION	COUNTY	TOTAL SHEETS	SHEET NO.

CONTRACT NO.
ILLINOIS FED. AID PROJECT

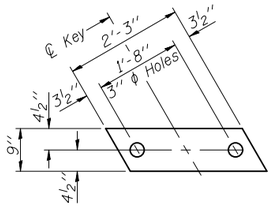

FABRIC BEARING PAD
(Interior)

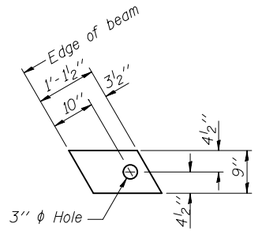

FABRIC BEARING PAD
(Exterior)

FIXED

Notes:
All bearing pads shall be 1" thick.
Omit holes when using expansion bearings.
Expansion bearing pad shall be bonded to the substructure.

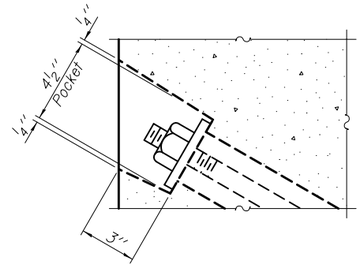

SECTION A-A

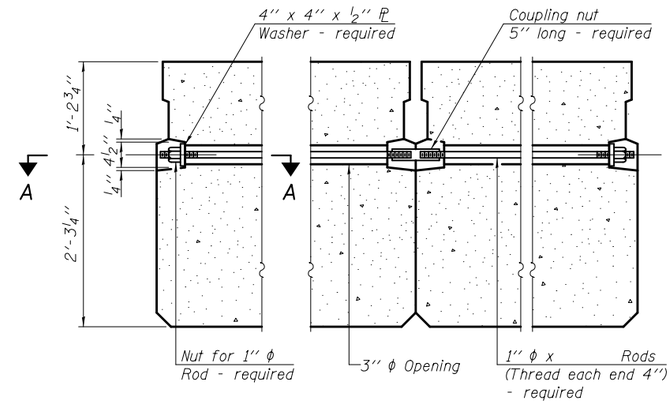

TYPICAL TRANSVERSE TIE ASSEMBLY

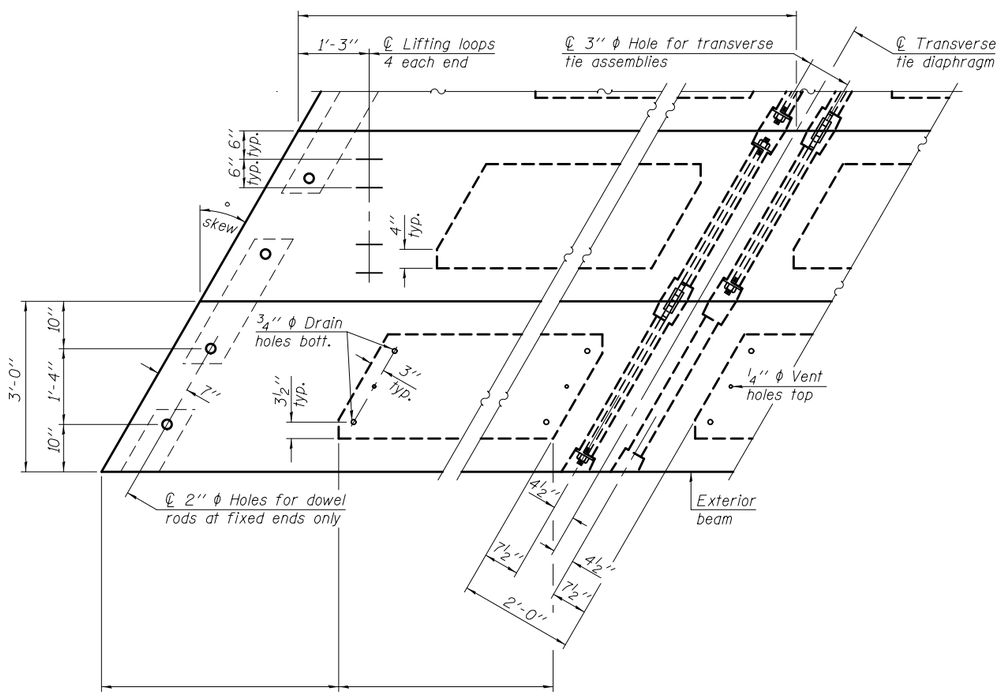

PLAN VIEW

Note: Connect beams in pairs with the transverse tie configuration shown.

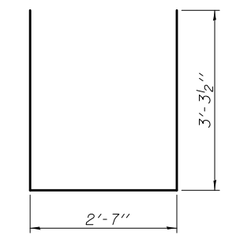

BAR S(E)

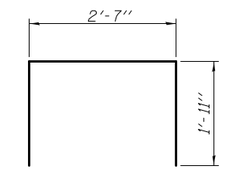

BAR S1(E)

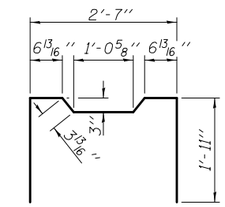

BAR S2(E)

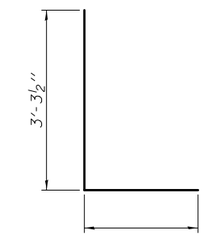

BAR S3(E)

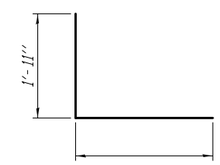

BAR S4(E)

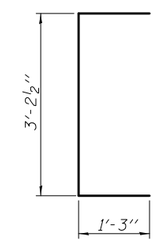

BAR U(E)

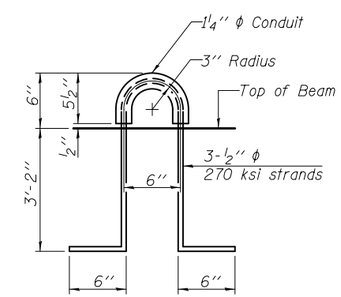

LIFTING LOOP DETAIL

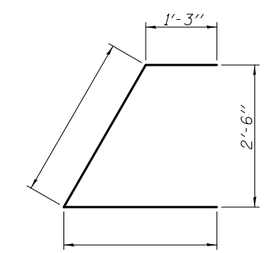

BAR U1(E)

NOTES

Prestressing steel shall be uncoated high strength, low relaxation 7-wire strand, Grade 270. The nominal diameter shall be ½" and the nominal cross-sectional area shall be 0.153 sq. in.

The 1" ϕ rods in the transverse tie assembly shall be tightened to a snug fit and the threads set. Pockets on exterior faces of bridge shall be filled with grout after transverse tie assembly is in place.

Two ⅛" fabric adjusting shims of the dimensions of the exterior bearing pad shall be provided for each bearing pad location.

A minimum 2½" ϕ lifting pin shall be used to engage the lifting loops during handling.

Corrosion Inhibitor, per Article 1020.05(b)(10) and 1021.07 of the Standard Specifications, shall be used in the concrete for precast prestressed concrete deck beams.

Compressive strength of prestressed concrete, f'c, shall be 6000 psi.

Compressive strength of prestressed concrete at release, f'ci, shall be 5000 psi.

BILL OF MATERIAL

Precast Prestressed Conc. Deck Bms. (42" depth)	Sq. Ft.	

PD-4236-LD 1-28-16

FILE NAME =	USER NAME =	DESIGNED -	REVISED -	STATE OF ILLINOIS DEPARTMENT OF TRANSPORTATION	42" x 36" PPC DECK BEAM DETAILS STRUCTURE NO.	F.A. RTE.	SECTION	COUNTY	TOTAL SHEETS	SHEET NO.
		CHECKED -	REVISED -							
	PLOT SCALE =	DRAWN -	REVISED -					CONTRACT NO.		
	PLOT DATE =	CHECKED -	REVISED -				ILLINOIS	FED. AID PROJECT		

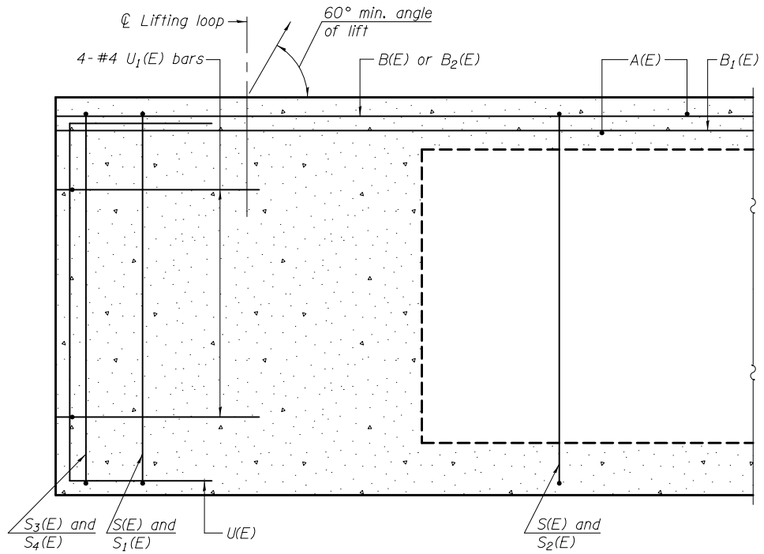

SECTION A-A

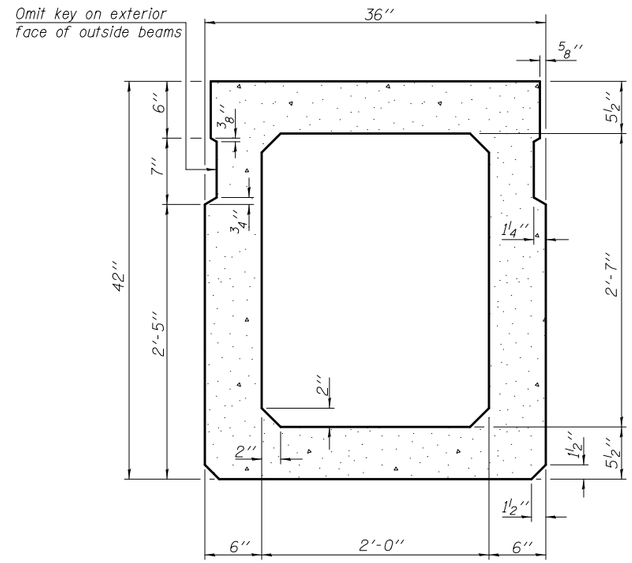

SECTION B-B

(Showing dimensions)

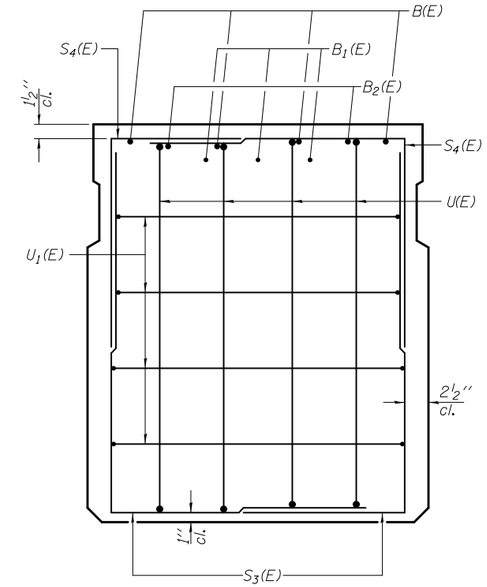

VIEW C-C

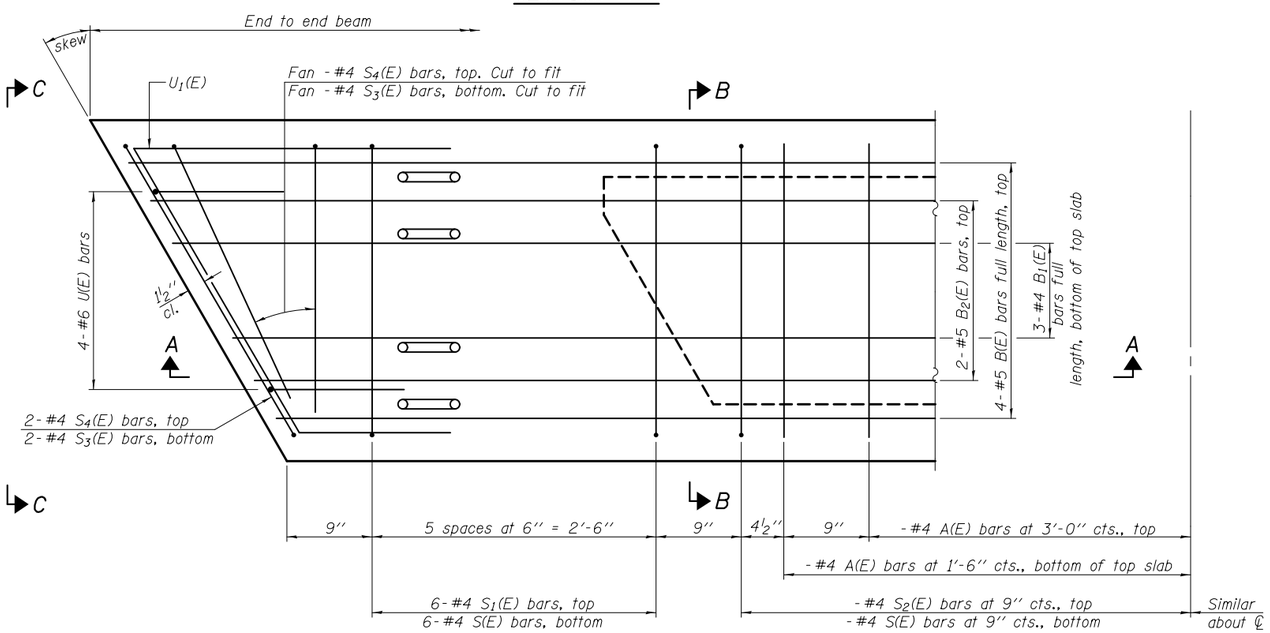

PLAN VIEW

Note: Spacing of S(E) and $S_2(E)$ bars may be adjusted up to 4″ in the immediate area of the transverse tie diaphragms to miss the block outs for the transverse ties.

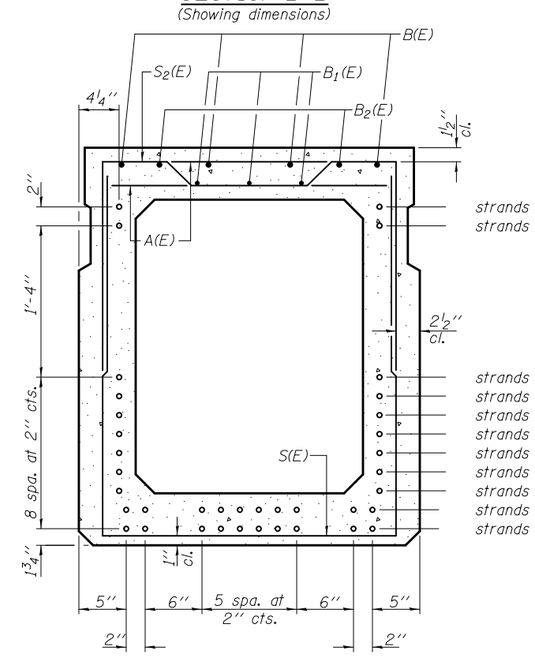

SECTION B-B

(Showing reinforcement and permissible strand locations)

Note: Place the number of strands specified in each row symmetrically about the centerline of beam in the permissible strand locations shown.

BAR LIST
ONE BEAM ONLY

(For information only)

Bar	No.	Size	Length	Shape
A(E)		#4	2′-7″	—
B(E)		#5		—
$B_1(E)$		#4		—
$B_2(E)$		#5	10′-0″	—
S(E)		#4	9′-2″	⊔
$S_1(E)$	12	#4	6′-5″	⊓
$S_2(E)$		#4	6′-8″	⊓
$S_3(E)$		#4		⊔
$S_4(E)$		#4		⊔
U(E)	8	#6	5′-9″	⊏
$U_1(E)$	8	#4		⊏

Note: See sheet of for additional details and Bill of Material.

MINIMUM BAR LAP

#4 bar = 1′-11″
#5 bar = 2′-6″

PD-4236-R 6-8-15

FILE NAME =	USER NAME =	DESIGNED -	REVISED -	STATE OF ILLINOIS DEPARTMENT OF TRANSPORTATION	42″ x 36″ PPC DECK BEAM STRUCTURE NO.	F.A. RTE. / SECTION / COUNTY / TOTAL SHEETS / SHEET NO.	
		CHECKED -	REVISED -				
	PLOT SCALE =	DRAWN -	REVISED -			CONTRACT NO.	
	PLOT DATE =	CHECKED -	REVISED -			ILLINOIS FED. AID PROJECT	

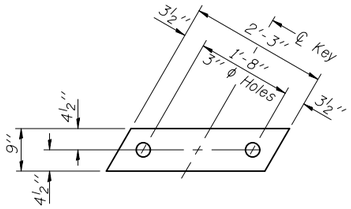

FABRIC BEARING PAD
(Interior)

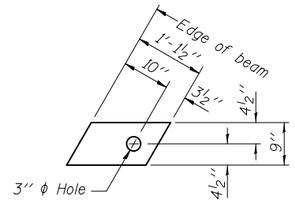

FABRIC BEARING PAD
(Exterior)

FIXED

Notes:
All bearing pads shall be 1'' thick.
Omit holes when using expansion bearings.
Expansion bearing pad shall be bonded to the substructure.

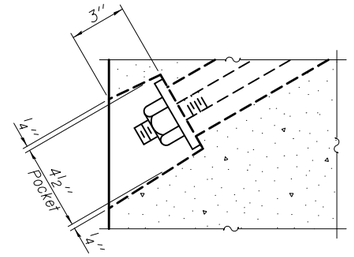

SECTION A-A

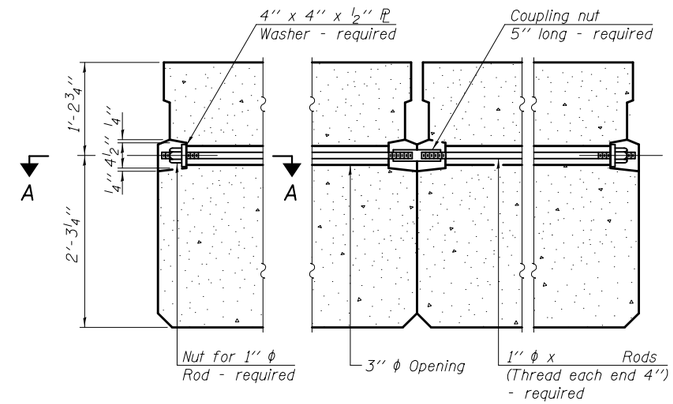

TYPICAL TRANSVERSE TIE ASSEMBLY

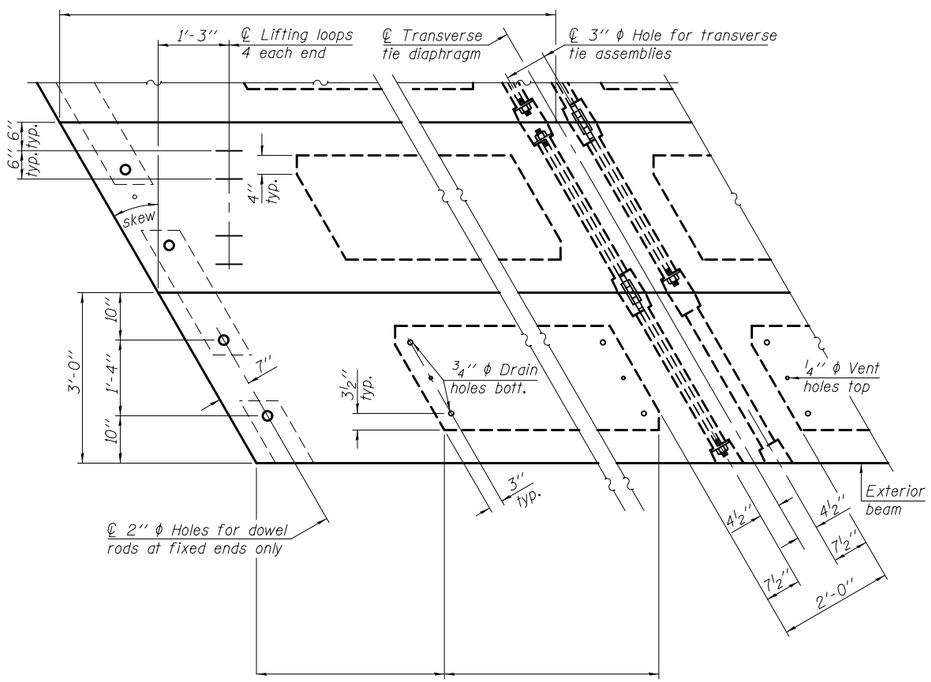

PLAN VIEW

Note: Connect beams in pairs with the transverse tie configuration shown.

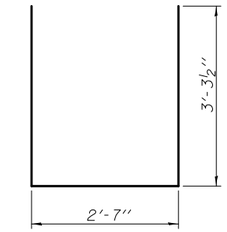

BAR S(E)

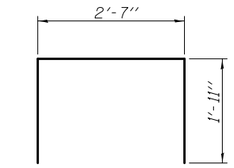

BAR S_1(E)

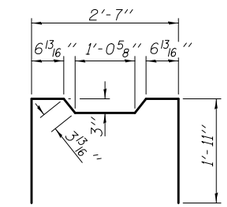

BAR S_2(E)

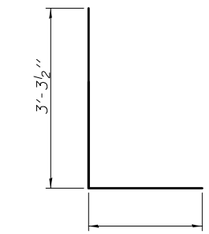

BAR S_3(E)

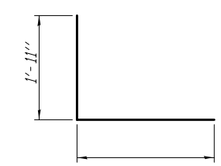

BAR S_4(E)

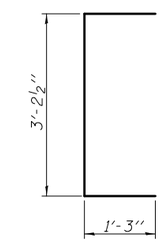

BAR U(E)

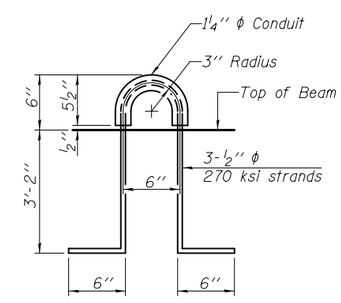

LIFTING LOOP DETAIL

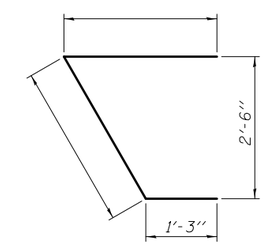

BAR U_1(E)

NOTES

Prestressing steel shall be uncoated high strength, low relaxation 7-wire strand, Grade 270. The nominal diameter shall be ½'' and the nominal cross-sectional area shall be 0.153 sq. in.

The 1'' ϕ rods in the transverse tie assembly shall be tightened to a snug fit and the threads set. Pockets on exterior faces of bridge shall be filled with grout after transverse tie assembly is in place.

Two ⅛'' fabric adjusting shims of the dimensions of the exterior bearing pad shall be provided for each bearing pad location.

A minimum 2½'' ϕ lifting pin shall be used to engage the lifting loops during handling.

Corrosion Inhibitor, per Article 1020.05(b)(10) and 1021.07 of the Standard Specifications, shall be used in the concrete for precast prestressed concrete deck beams.

Compressive strength of prestressed concrete, f'c, shall be 6000 psi.

Compressive strength of prestressed concrete at release, f'ci, shall be 5000 psi.

BILL OF MATERIAL

Precast Prestressed Conc. Deck Bms. (42'' depth)	Sq. Ft.	

PD-4236-RD 1-28-16

FILE NAME =	USER NAME =	DESIGNED -	REVISED -	STATE OF ILLINOIS DEPARTMENT OF TRANSPORTATION	42'' x 36'' PPC DECK BEAM DETAILS STRUCTURE NO.	F.A. RTE.	SECTION	COUNTY	TOTAL SHEETS / SHEET NO.
		CHECKED -	REVISED -						
	PLOT SCALE =	DRAWN -	REVISED -					CONTRACT NO.	
	PLOT DATE =	CHECKED -	REVISED -				ILLINOIS	FED. AID PROJECT	

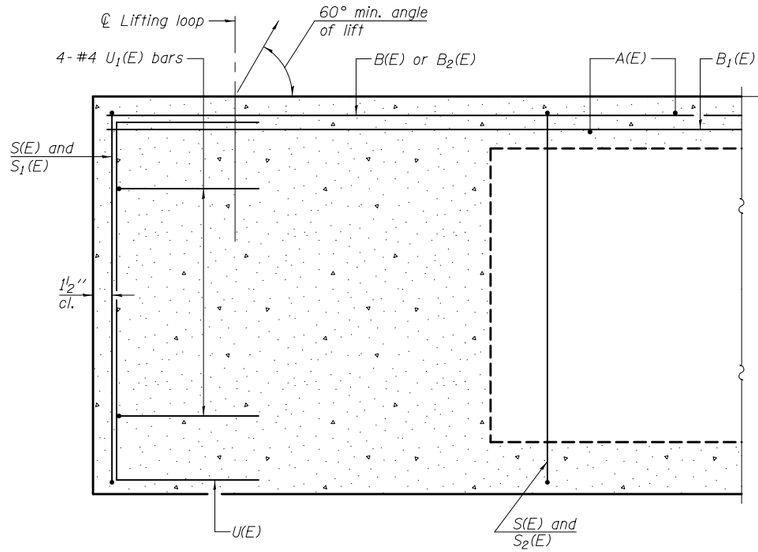

SECTION A-A

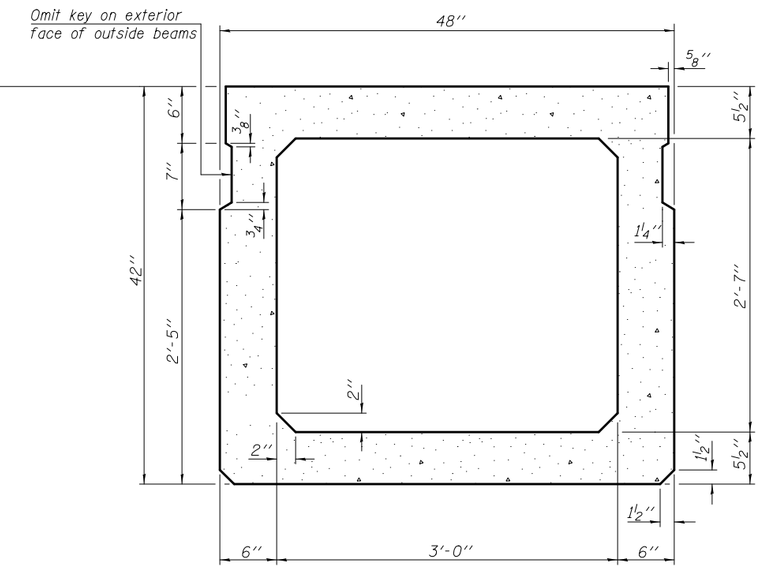

SECTION B-B
(Showing dimensions)

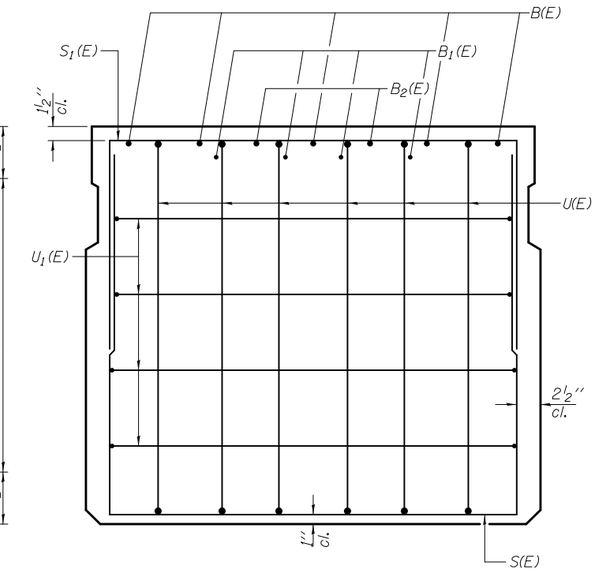

VIEW C-C

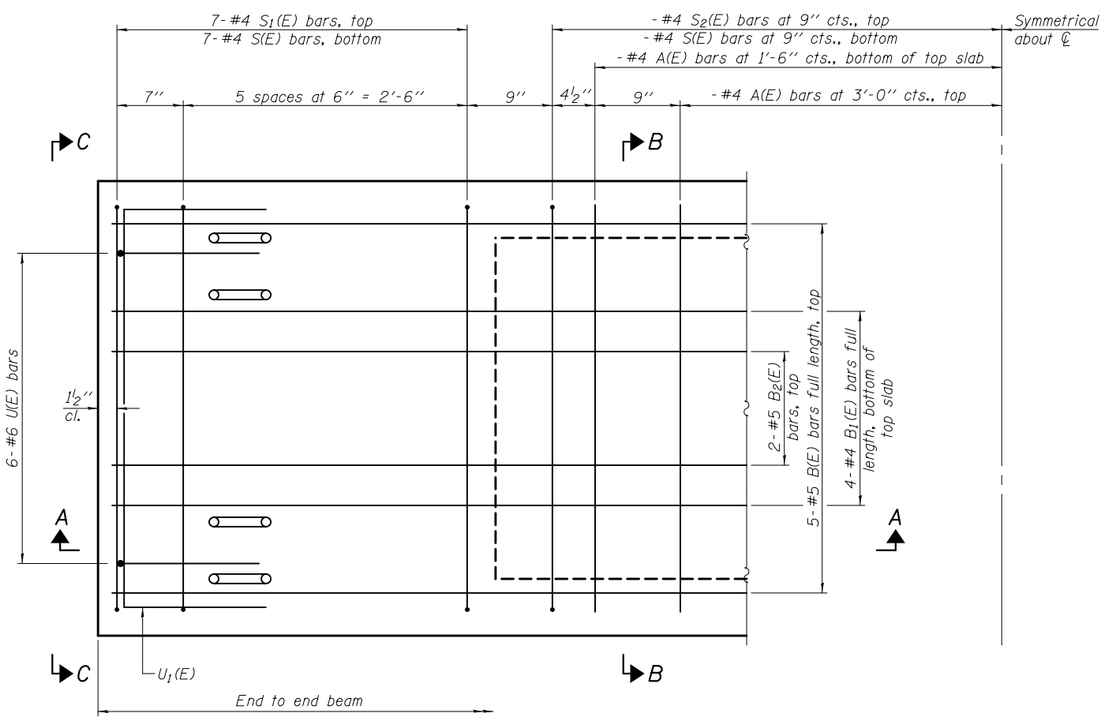

PLAN VIEW

Note: Spacing of S(E) and $S_2(E)$ bars may be adjusted up to 4″ in the immediate area of the transverse tie diaphragms to miss the block outs for the transverse ties.

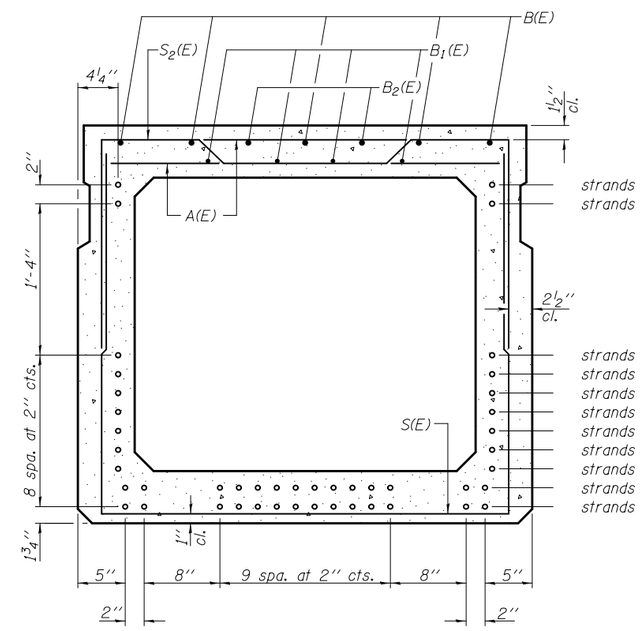

SECTION B-B
(Showing reinforcement and permissible strand locations)

Note: Place the number of strands specified in each row symmetrically about the centerline of beam in the permissible strand locations shown.

BAR LIST
ONE BEAM ONLY
(For information only)

Bar	No.	Size	Length	Shape
A(E)		#4	3′-7″	—
B(E)		#5		—
$B_1(E)$		#4		—
$B_2(E)$		#5	10′-0″	—
S(E)		#4	10′-2″	⊔
$S_1(E)$	14	#4	7′-5″	⊓
$S_2(E)$		#4	7′-8″	⊓
U(E)	12	#6	5′-9″	⊏
$U_1(E)$	8	#4	6′-0″	⊓

Note: See sheet of for additional details and Bill of Material.

MINIMUM BAR LAP
#4 bar = 1′-11″
#5 bar = 2′-6″

PD-4248-0 6-8-15

FILE NAME =	USER NAME =	DESIGNED -	REVISED -
		CHECKED -	REVISED -
	PLOT SCALE =	DRAWN -	REVISED -
	PLOT DATE =	CHECKED -	REVISED -

STATE OF ILLINOIS
DEPARTMENT OF TRANSPORTATION

42″ x 48″ PPC DECK BEAM
STRUCTURE NO.

F.A. RTE.	SECTION	COUNTY	TOTAL SHEETS	SHEET NO.

CONTRACT NO.
ILLINOIS FED. AID PROJECT

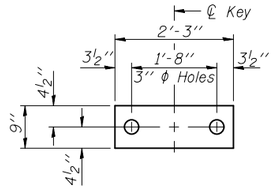

FABRIC BEARING PAD
(Interior)

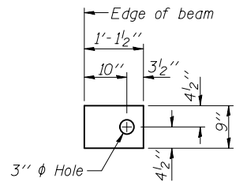

FABRIC BEARING PAD
(Exterior)

FIXED

Notes:
All bearing pads shall be 1" thick.
Omit holes when using expansion bearings.
Expansion bearing pad shall be bonded to the substructure.

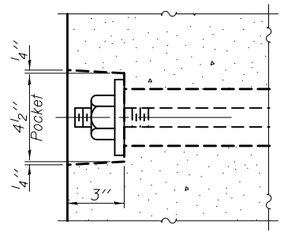

SECTION A-A

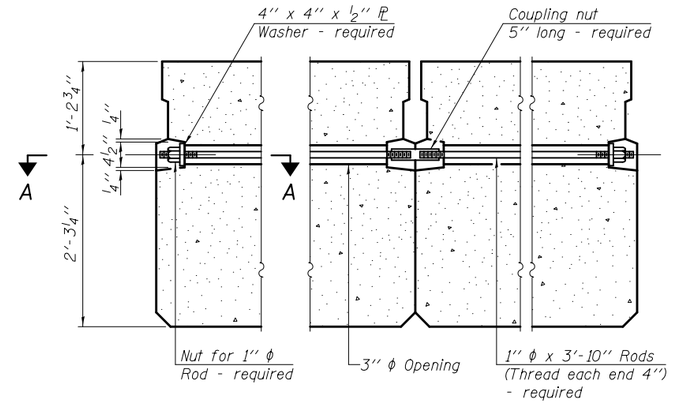

TYPICAL TRANSVERSE TIE ASSEMBLY

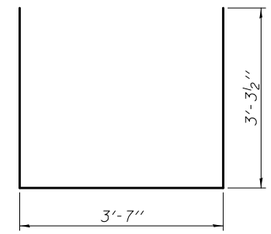

BAR S(E)

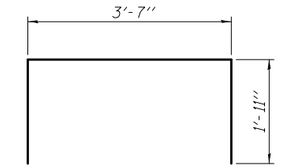

BAR S1(E)

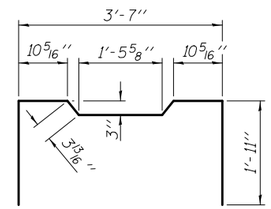

BAR S2(E)

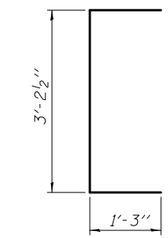

BAR U(E)

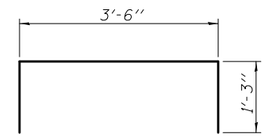

BAR U1(E)

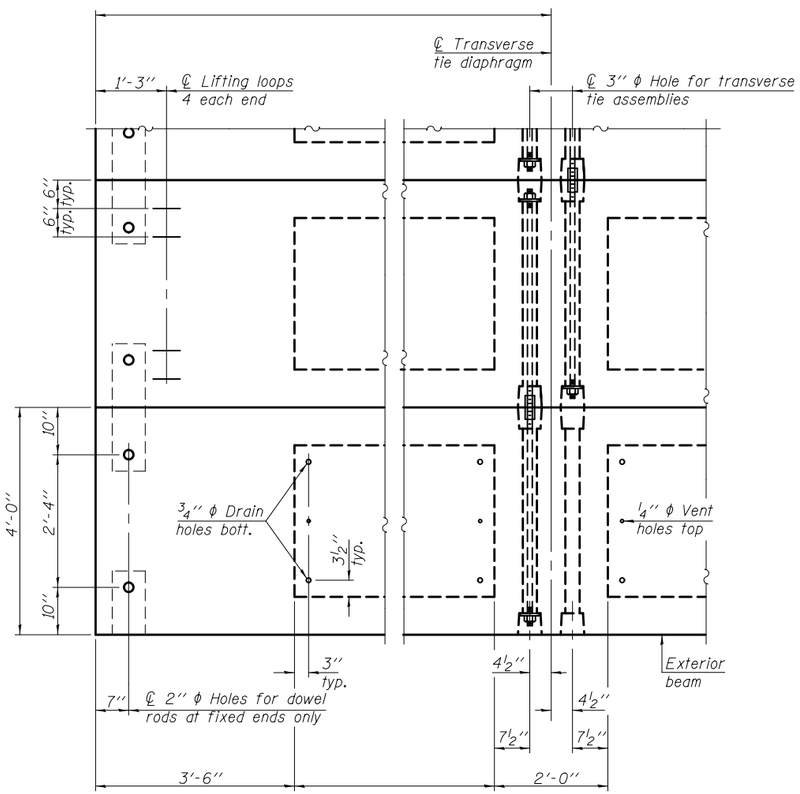

PLAN VIEW

Note: Connect beams in pairs with the
transverse tie configuration shown.

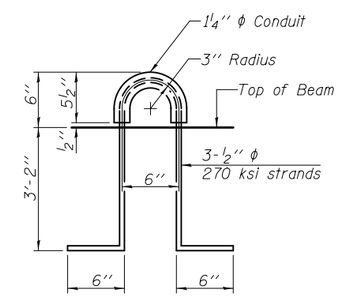

LIFTING LOOP DETAIL

NOTES

Prestressing steel shall be uncoated high strength, low relaxation 7-wire strand, Grade 270. The nominal diameter shall be ½" and the nominal cross-sectional area shall be 0.153 sq. in.

The 1" ϕ rods in the transverse tie assembly shall be tightened to a snug fit and the threads set. Pockets on exterior faces of bridge shall be filled with grout after transverse tie assembly is in place.

Two ⅛" fabric adjusting shims of the dimensions of the exterior bearing pad shall be provided for each bearing pad location.

A minimum 2½" ϕ lifting pin shall be used to engage the lifting loops during handling.

Corrosion Inhibitor, per Article 1020.05(b)(10) and 1021.07 of the Standard Specifications, shall be used in the concrete for precast prestressed concrete deck beams.

Compressive strength of prestressed concrete, f'c, shall be 6000 psi.

Compressive strength of prestressed concrete at release, f'ci, shall be 5000 psi.

BILL OF MATERIAL

Precast Prestressed Conc. Deck Bms. (42" depth)	Sq. Ft.	

PD-4248-0D 1-28-16

FILE NAME =	USER NAME =	DESIGNED -	REVISED -	STATE OF ILLINOIS DEPARTMENT OF TRANSPORTATION	42" x 48" PPC DECK BEAM DETAILS STRUCTURE NO.	F.A. RTE.	SECTION	COUNTY	TOTAL SHEETS / SHEET NO.
		CHECKED -	REVISED -						
	PLOT SCALE =	DRAWN -	REVISED -					CONTRACT NO.	
	PLOT DATE =	CHECKED -	REVISED -				ILLINOIS	FED. AID PROJECT	

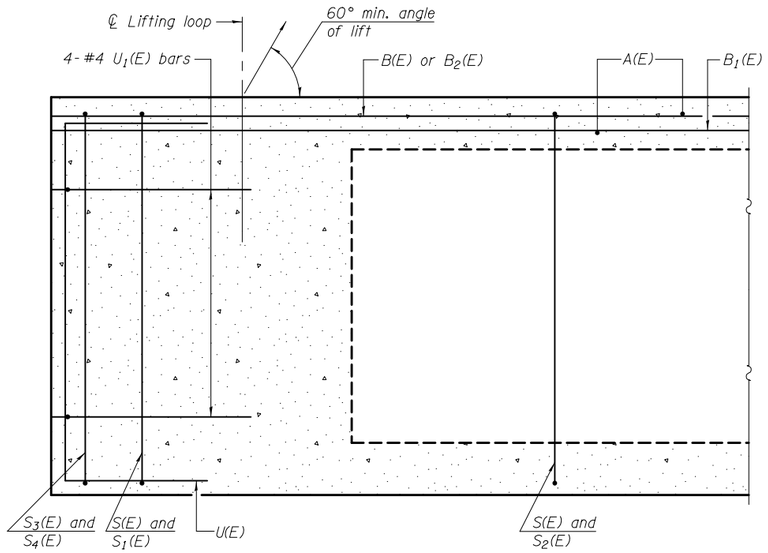

SECTION A-A

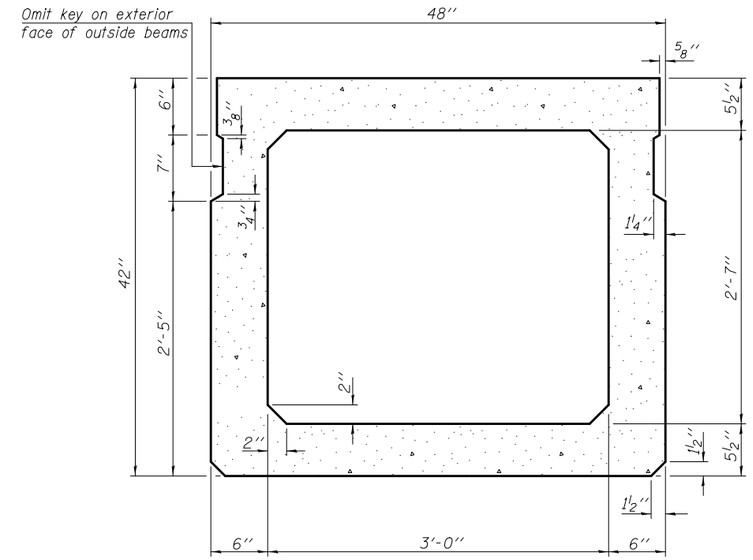

SECTION B-B

(Showing dimensions)

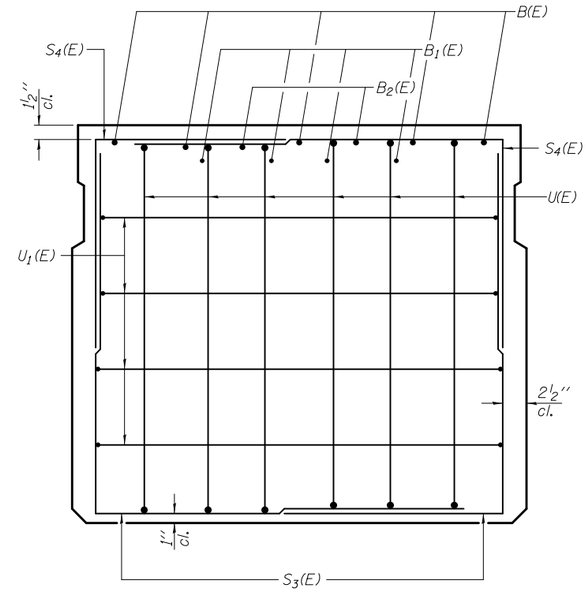

VIEW C-C

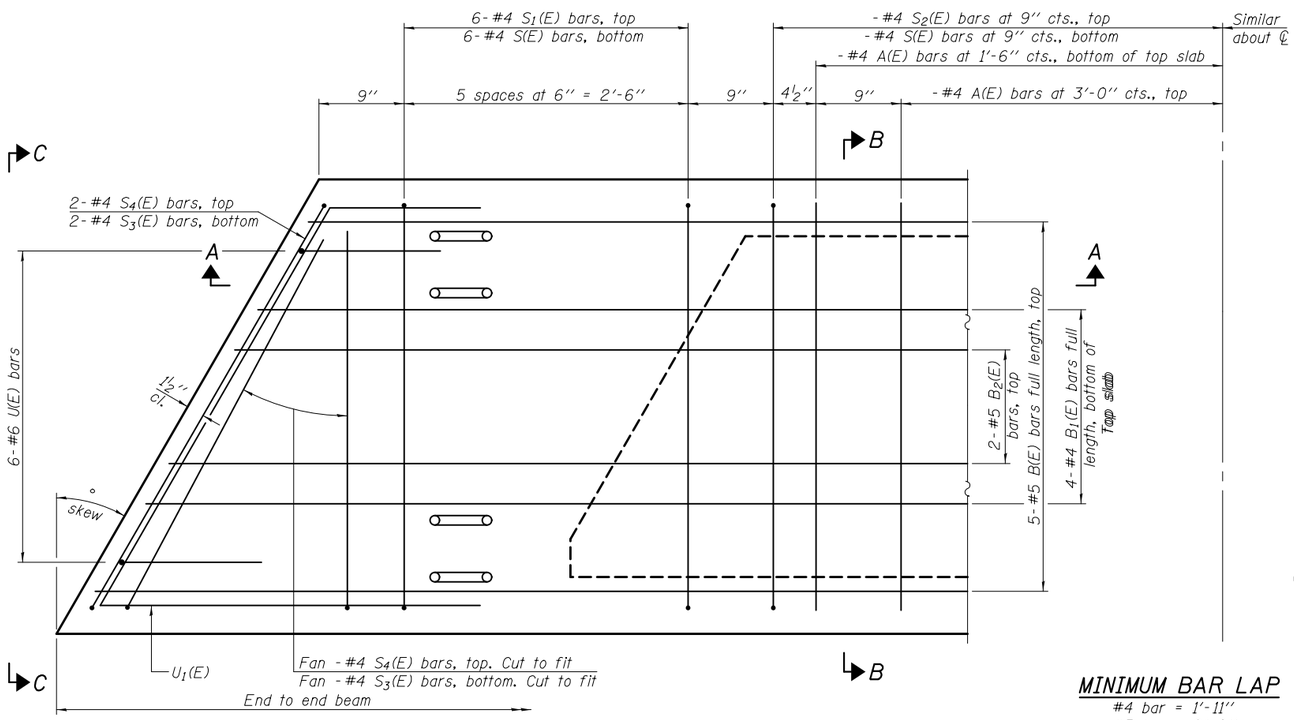

PLAN VIEW

Note: Spacing of S(E) and S_2(E) bars may be adjusted up to 4″ in the immediate area of the transverse tie diaphragms to miss the block outs for the transverse ties.

MINIMUM BAR LAP

#4 bar = 1′-11″
#5 bar = 2′-6″

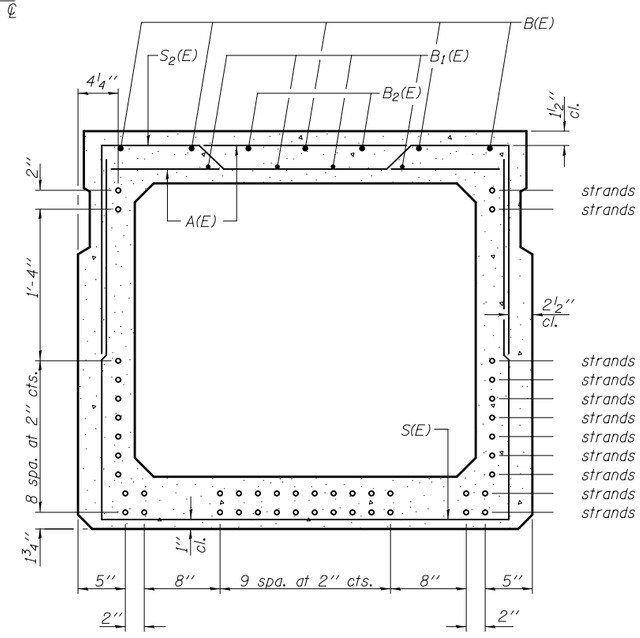

SECTION B-B

(Showing reinforcement and permissible strand locations)

Note: Place the number of strands specified in each row symmetrically about the centerline of beam in the permissible strand locations shown.

BAR LIST
ONE BEAM ONLY

(For information only)

Bar	No.	Size	Length	Shape
A(E)		#4	3′-7″	—
B(E)		#5		—
B_1(E)		#4		—
B_2(E)		#5	10′-0″	—
S(E)		#4	10′-2″	⊔
S_1(E)	12	#4	7′-5″	⊓
S_2(E)		#4	7′-8″	⊓
S_3(E)		#4		⊔
S_4(E)		#4		⊔
U(E)	12	#6	5′-9″	⊏
U_1(E)	8	#4		⊏

Note: See sheet of for additional details and Bill of Material.

PD-4248-L 6-8-15

FILE NAME =	USER NAME =	DESIGNED -	REVISED -
		CHECKED -	REVISED -
	PLOT SCALE =	DRAWN -	REVISED -
	PLOT DATE =	CHECKED -	REVISED -

STATE OF ILLINOIS
DEPARTMENT OF TRANSPORTATION

42″ x 48″ PPC DECK BEAM
STRUCTURE NO.

F.A. RTE.	SECTION	COUNTY	TOTAL SHEETS	SHEET NO.

CONTRACT NO.

ILLINOIS FED. AID PROJECT

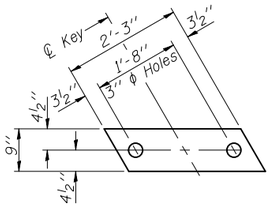

FABRIC BEARING PAD
(Interior)

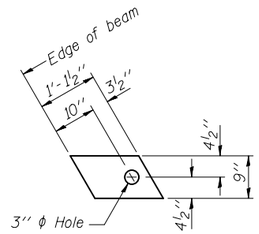

FABRIC BEARING PAD
(Exterior)

FIXED

Notes:
All bearing pads shall be 1" thick.
Omit holes when using expansion bearings.
Expansion bearing pad shall be bonded to the substructure.

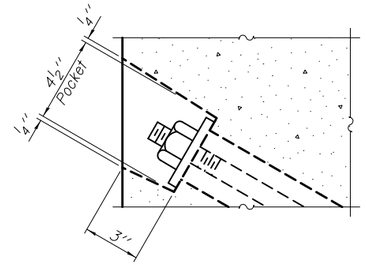

SECTION A-A

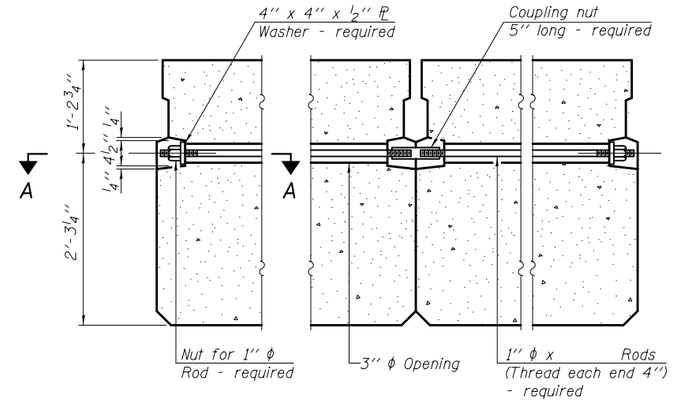

TYPICAL TRANSVERSE TIE ASSEMBLY

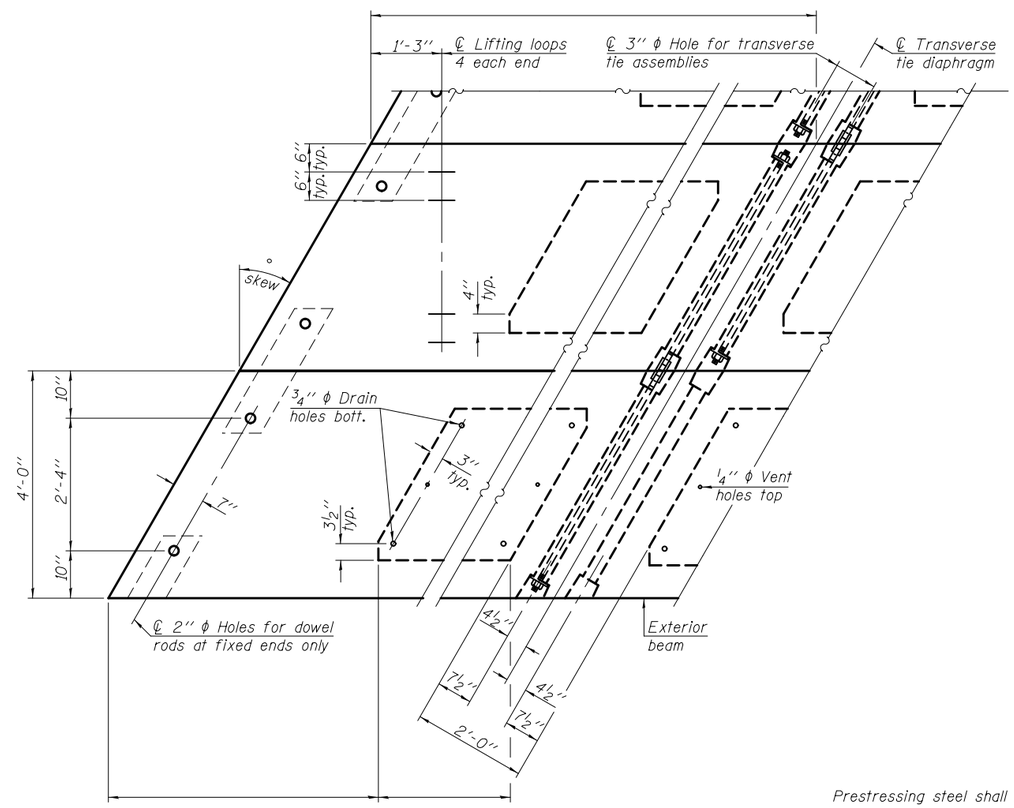

PLAN VIEW

Note: Connect beams in pairs with the transverse tie configuration shown.

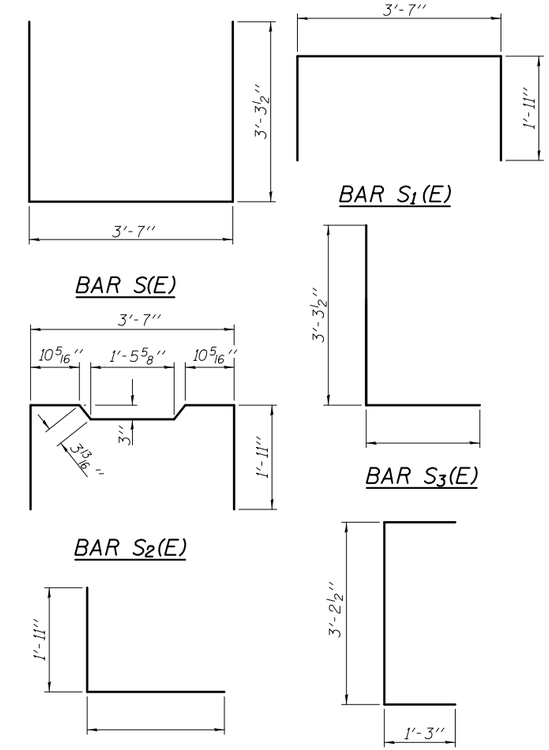

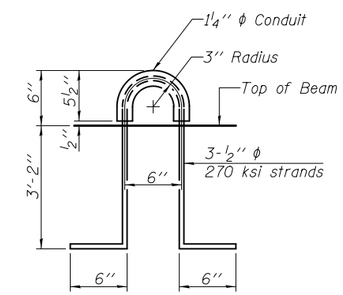

LIFTING LOOP DETAIL

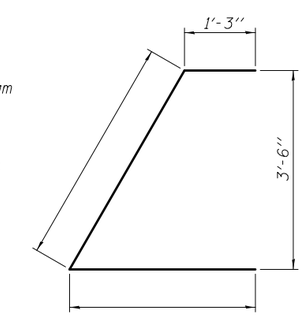

BAR U1(E)

NOTES

Prestressing steel shall be uncoated high strength, low relaxation 7-wire strand, Grade 270. The nominal diameter shall be ½" and the nominal cross-sectional area shall be 0.153 sq. in.

The 1" ϕ rods in the transverse tie assembly shall be tightened to a snug fit and the threads set. Pockets on exterior faces of bridge shall be filled with grout after transverse tie assembly is in place.

Two ⅛" fabric adjusting shims of the dimensions of the exterior bearing pad shall be provided for each bearing pad location.

A minimum 2½" ϕ lifting pin shall be used to engage the lifting loops during handling.

Corrosion Inhibitor, per Article 1020.05(b)(10) and 1021.07 of the Standard Specifications, shall be used in the concrete for precast prestressed concrete deck beams.

Compressive strength of prestressed concrete, f'c, shall be 6000 psi.

Compressive strength of prestressed concrete at release, f'ci, shall be 5000 psi.

BILL OF MATERIAL

Precast Prestressed Conc. Deck Bms. (42" depth)	Sq. Ft.	

PD-4248-LD 1-28-16

FILE NAME =	USER NAME =	DESIGNED -	REVISED -	STATE OF ILLINOIS DEPARTMENT OF TRANSPORTATION	42" x 48" PPC DECK BEAM DETAILS STRUCTURE NO.	F.A. RTE.	SECTION	COUNTY	TOTAL SHEETS / SHEET NO.
		CHECKED -	REVISED -						
	PLOT SCALE =	DRAWN -	REVISED -					CONTRACT NO.	
	PLOT DATE =	CHECKED -	REVISED -				ILLINOIS	FED. AID PROJECT	

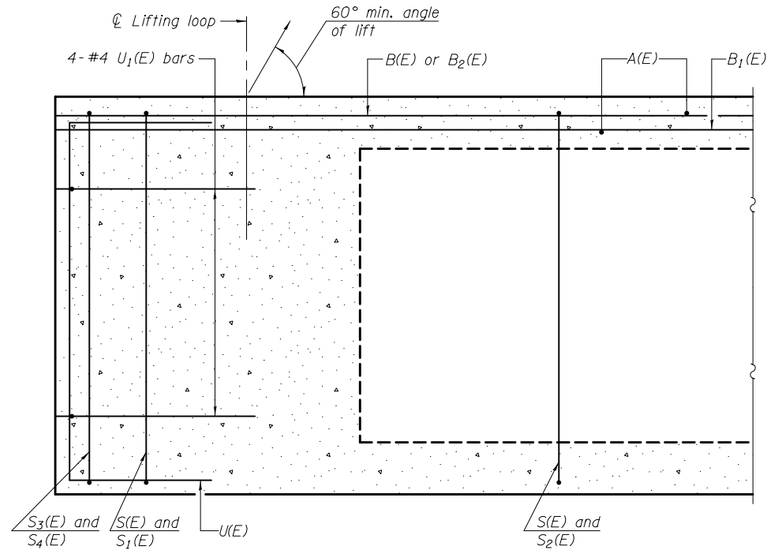

SECTION A-A

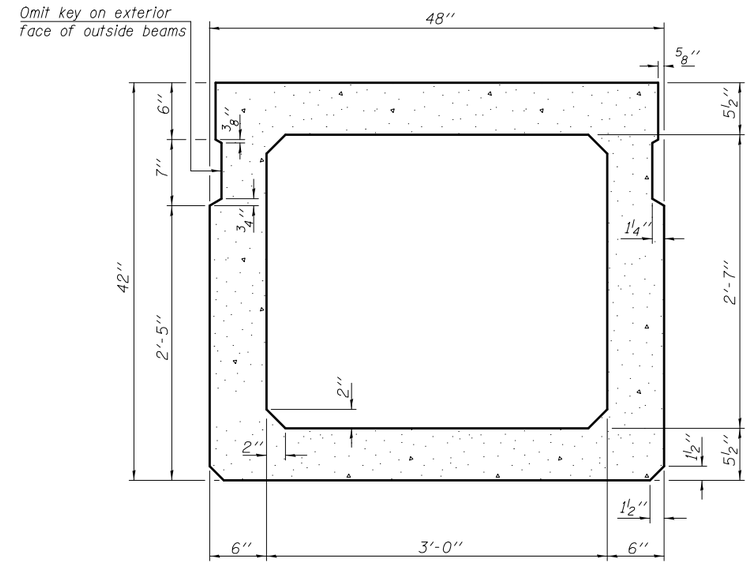

SECTION B-B

(Showing dimensions)

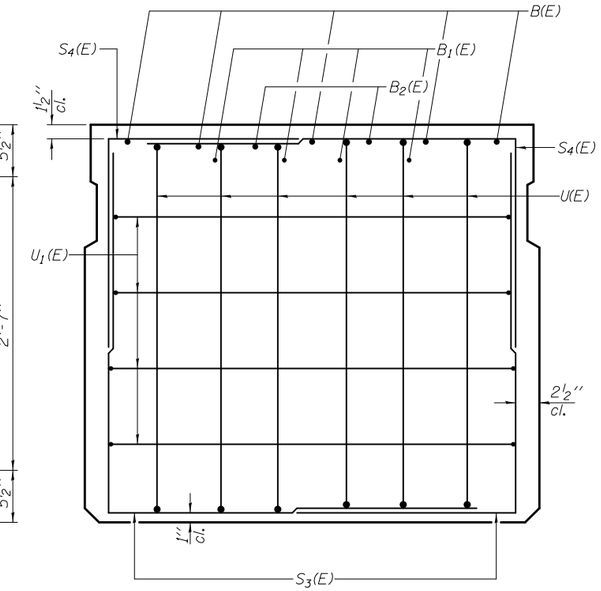

VIEW C-C

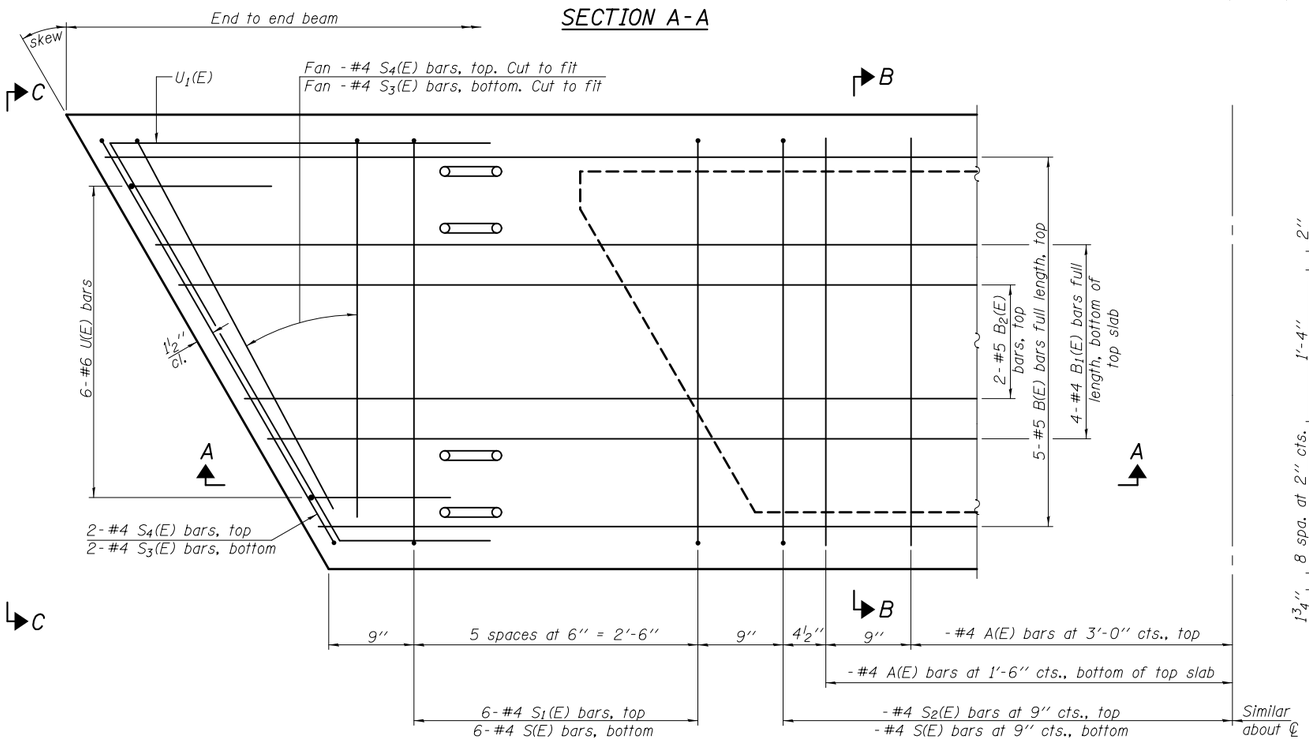

PLAN VIEW

Note: Spacing of S(E) and $S_2(E)$ bars may be adjusted up to 4″ in the immediate area of the transverse tie diaphragms to miss the block outs for the transverse ties.

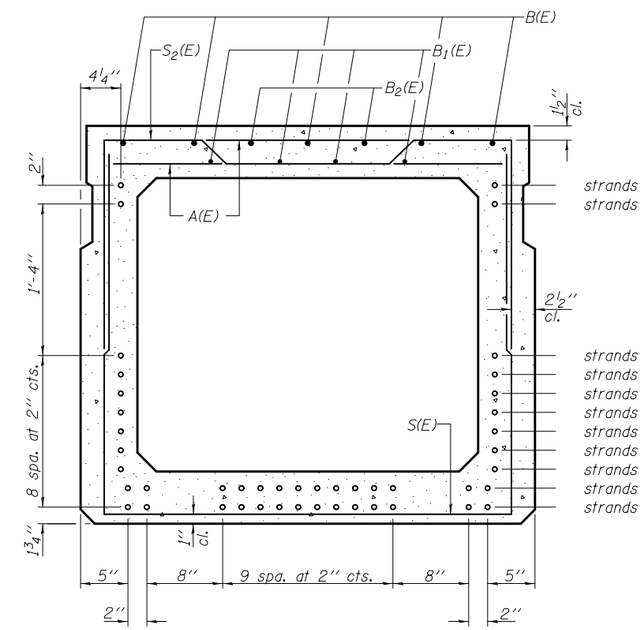

SECTION B-B

(Showing reinforcement and permissible strand locations)

Note: Place the number of strands specified in each row symmetrically about the centerline of beam in the permissible strand locations shown.

BAR LIST
ONE BEAM ONLY

(For information only)

Bar	No.	Size	Length	Shape
A(E)		#4	3′-7″	—
B(E)		#5		—
$B_1(E)$		#4		—
$B_2(E)$		#5	10′-0″	—
S(E)		#4	10′-2″	⊔
$S_1(E)$	12	#4	7′-5″	⊓
$S_2(E)$		#4	7′-8″	⊓
$S_3(E)$		#4		⊔
$S_4(E)$		#4		⊔
U(E)	12	#6	5′-9″	⊏
$U_1(E)$	8	#4		⊏

Note: See sheet of for additional details and Bill of Material.

MINIMUM BAR LAP

#4 bar = 1′-11″
#5 bar = 2′-6″

PD-4248-R 6-8-15

FILE NAME =	USER NAME =	DESIGNED -	REVISED -
		CHECKED -	REVISED -
	PLOT SCALE =	DRAWN -	REVISED -
	PLOT DATE =	CHECKED -	REVISED -

STATE OF ILLINOIS
DEPARTMENT OF TRANSPORTATION

42″ x 48″ PPC DECK BEAM
STRUCTURE NO.

F.A. RTE.	SECTION	COUNTY	TOTAL SHEETS	SHEET NO.
		CONTRACT NO.		
	ILLINOIS FED. AID PROJECT			

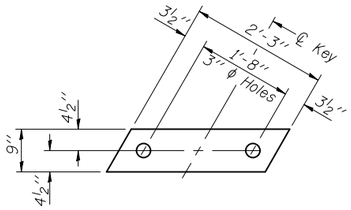

FABRIC BEARING PAD
(Interior)

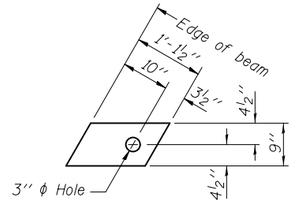

FABRIC BEARING PAD
(Exterior)

FIXED

Notes:
All bearing pads shall be 1'' thick.
Omit holes when using expansion bearings.
Expansion bearing pad shall be bonded to the substructure.

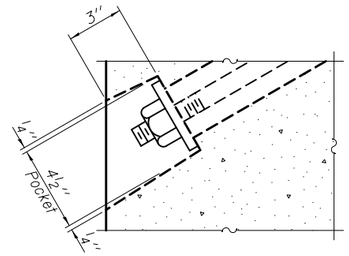

SECTION A-A

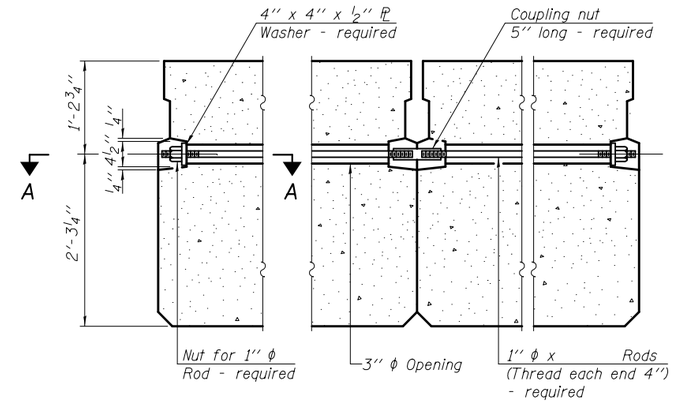

TYPICAL TRANSVERSE TIE ASSEMBLY

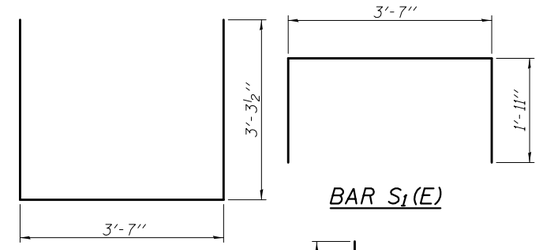

BAR S(E)

BAR S_1(E)

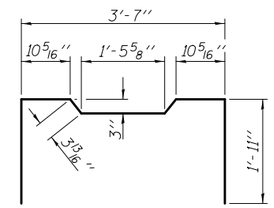

BAR S_2(E)

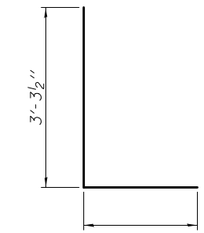

BAR S_3(E)

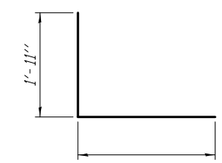

BAR S_4(E)

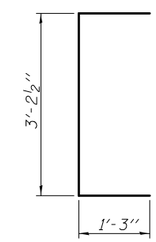

BAR U(E)

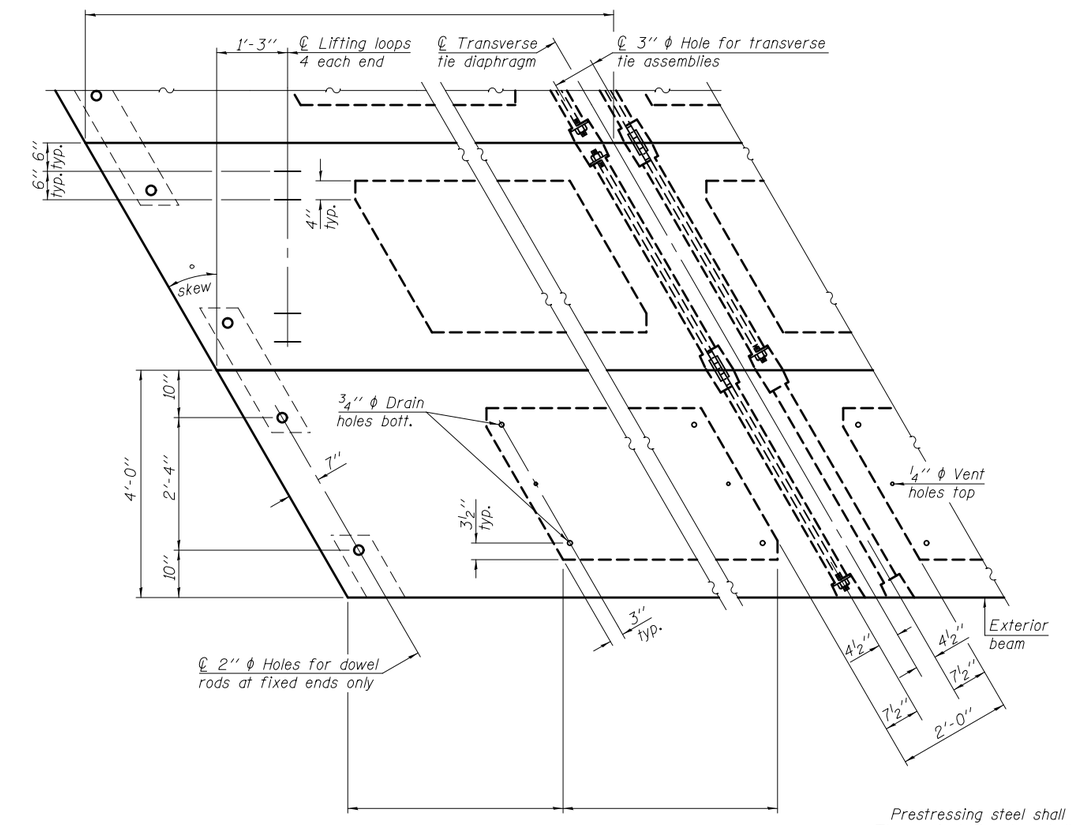

PLAN VIEW

Note: Connect beams in pairs with the transverse tie configuration shown.

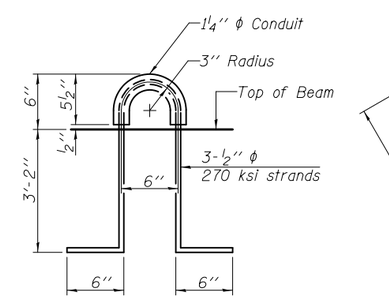

LIFTING LOOP DETAIL

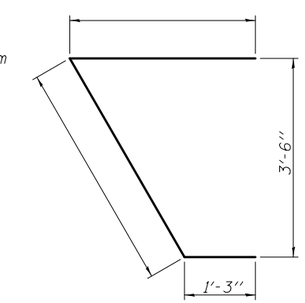

BAR U_1(E)

NOTES

Prestressing steel shall be uncoated high strength, low relaxation 7-wire strand, Grade 270. The nominal diameter shall be ½'' and the nominal cross-sectional area shall be 0.153 sq. in.

The 1'' ϕ rods in the transverse tie assembly shall be tightened to a snug fit and the threads set. Pockets on exterior faces of bridge shall be filled with grout after transverse tie assembly is in place.

Two ⅛'' fabric adjusting shims of the dimensions of the exterior bearing pad shall be provided for each bearing pad location.

A minimum 2½'' ϕ lifting pin shall be used to engage the lifting loops during handling.

Corrosion Inhibitor, per Article 1020.05(b)(10) and 1021.07 of the Standard Specifications, shall be used in the concrete for precast prestressed concrete deck beams.

Compressive strength of prestressed concrete, f'c, shall be 6000 psi.

Compressive strength of prestressed concrete at release, f'ci, shall be 5000 psi.

BILL OF MATERIAL

Precast Prestressed Conc. Deck Bms. (42'' depth)	Sq. Ft.	

PD-4248-RD 1-28-16

FILE NAME =	USER NAME =	DESIGNED -	REVISED -	STATE OF ILLINOIS DEPARTMENT OF TRANSPORTATION	42'' x 48'' PPC DECK BEAM DETAILS STRUCTURE NO.	F.A. RTE.	SECTION	COUNTY	TOTAL SHEETS	SHEET NO.
		CHECKED -	REVISED -							
	PLOT SCALE =	DRAWN -	REVISED -			CONTRACT NO.				
	PLOT DATE =	CHECKED -	REVISED -			ILLINOIS FED. AID PROJECT				