CELL / MODEL NAME	DESCRIPTION	DATE
TSA-SB-HC-LS	2 rows of reinf in top slab; 1 row of reinf in each sidewall; Horizontal Cantilever Wingwalls, Left Skew	10/15/2016
TSA-SB-HC-RS	2 rows of reinf in top slab; 1 row of reinf in each sidewall; Horizontal Cantilever Wingwalls, Right Skew	10/15/2016
TSA-SB-HC-ZS	2 rows of reinf in top slab; 1 row of reinf in each sidewall; Horizontal Cantilever Wingwalls, Zero Skew	10/15/2016
TSA-SC-HC-LS	2 rows of reinf in top slab; 2 rows of reinf in each sidewall; Horizontal Cantilever Wingwalls, Left Skew	10/15/2016
TSA-SC-HC-RS	2 rows of reinf in top slab; 2 rows of reinf in each sidewall; Horizontal Cantilever Wingwalls, Right Skew	10/15/2016
TSA-SC-HC-ZS	2 rows of reinf in top slab; 2 rows of reinf in each sidewall; Horizontal Cantilever Wingwalls, Zero Skew	10/15/2016
TSB-SB-HC-LS	1 row of reinf in top slab; 1 row of reinf in each sidewall; Horizontal Cantilever Wingwalls, Left Skew	10/15/2016
TSB-SB-HC-RS	1 row of reinf in top slab; 1 row of reinf in each sidewall; Horizontal Cantilever Wingwalls, Right Skew	10/15/2016
TSB-SB-HC-ZS	1 row of reinf in top slab; 1 row of reinf in each sidewall; Horizontal Cantilever Wingwalls, Zero Skew	10/15/2016
TSB-SC-HC-LS	1 row of reinf in top slab; 2 rows of reinf in each sidewall; Horizontal Cantilever Wingwalls, Left Skew	10/15/2016
TSB-SC-HC-RS	1 row of reinf in top slab; 2 rows of reinf in each sidewall; Horizontal Cantilever Wingwalls, Right Skew	10/15/2016
TSB-SC-HC-ZS	1 row of reinf in top slab; 2 rows of reinf in each sidewall; Horizontal Cantilever Wingwalls, Zero Skew	10/15/2016

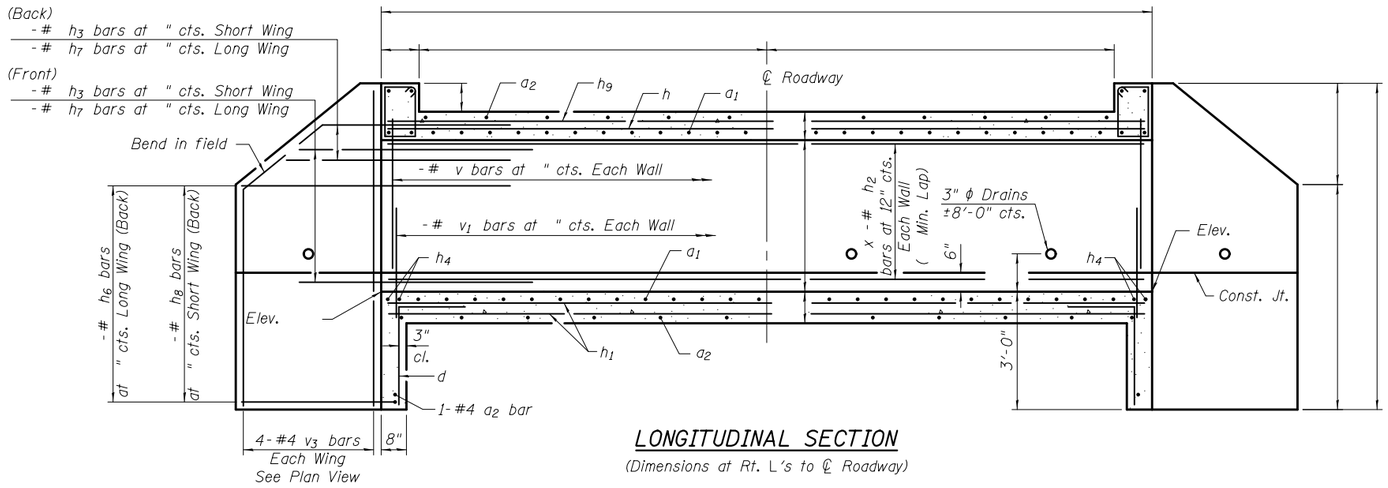

LONGITUDINAL SECTION

(Dimensions at Rt. L's to ℄ Roadway)

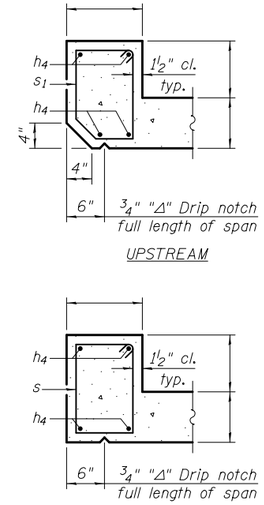

SECTION THRU HEADWALL

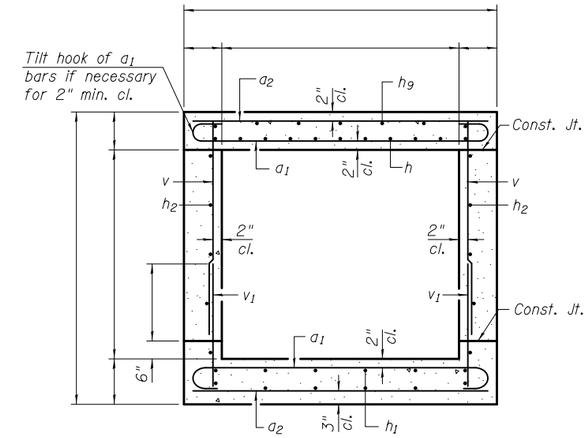

SECTION THRU BARREL

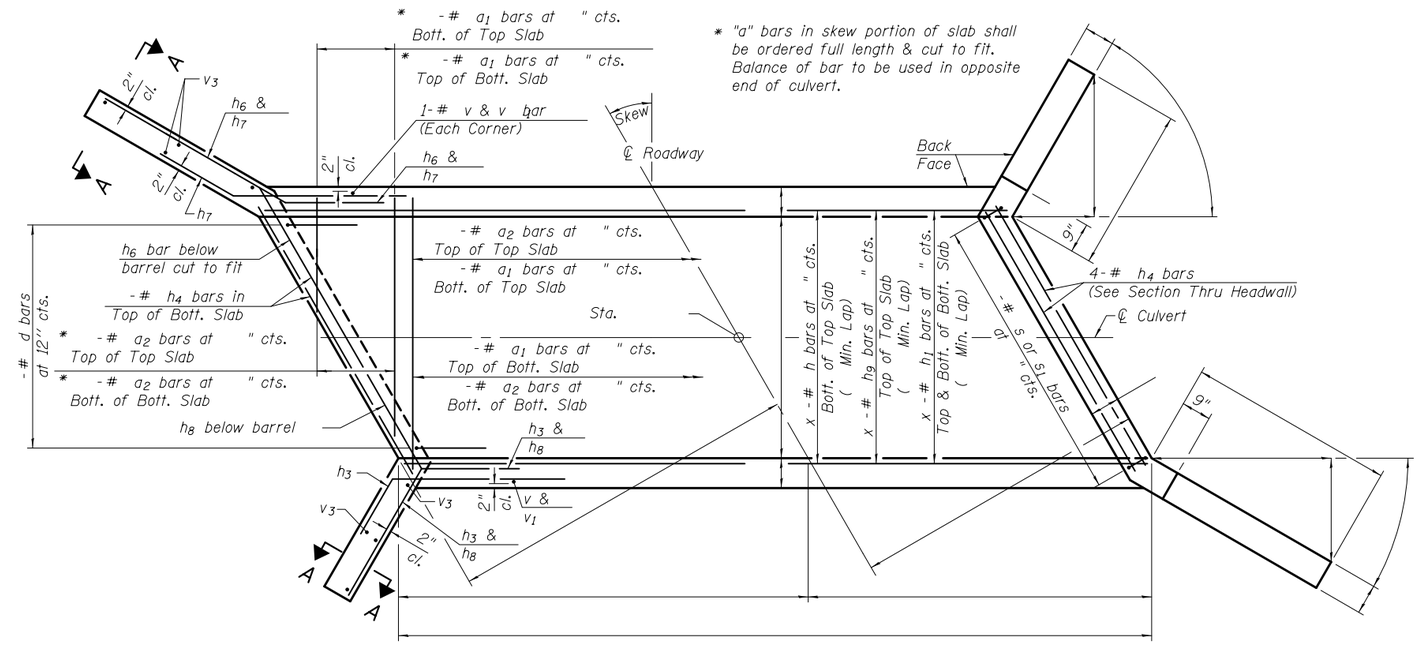

SHOWING TOEWALL

PLAN

SHOWING HEADWALL

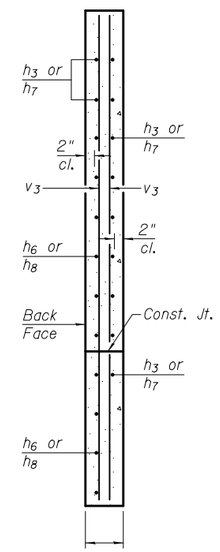

SECTION A-A

BILL OF MATERIAL

Bar	No.	Size	Length	Shape
a1		#		
a2		#		
d		#4	4'-5"	
h		#		
h1		#		
h2		#		
h3		#	8'-0"	
h4		#		
h6		#		
h7		#	8'-0"	
h8		#		
h9		#		
s		#		
s1		#		
v		#		
v1		#		
v3		#4		
Concrete Box Culverts			Cu. Yd.	
Reinforcement Bars			Pound	

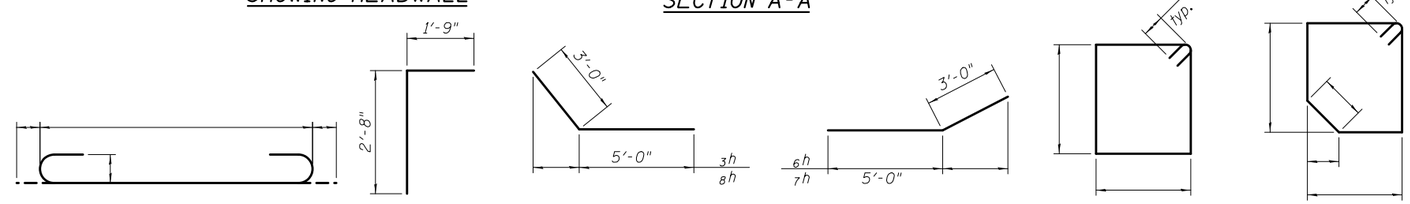

BAR a1 BAR d BARS h3 & h8 BARS h6 & h7 BAR s BAR s1

Notes:

A distance of half the length of the wingwall but not less than six feet of the barrel shall be poured monolithically with the wingwalls.

Bars indicated thus 12 x 4-#5 etc. indicates 12 lines of bars with 4 lengths per line.

At the Contractor's option, a longer v1 bar may be ordered to replace the v bar. No reduction in quantities shall be made for this substitution.

TSA-SB-HC-LS 10-15-2016

FILE NAME =	USER NAME =	DESIGNED -	REVISED
		CHECKED -	REVISED
	PLOT SCALE =	DRAWN -	REVISED
	PLOT DATE =	CHECKED -	REVISED

STATE OF ILLINOIS
DEPARTMENT OF TRANSPORTATION

CULVERT DETAILS
STRUCTURE NO.

SHEET NO. OF SHEETS

F.A. RTE.	SECTION	COUNTY	TOTAL SHEETS	SHEET NO.
		CONTRACT NO.		
	ILLINOIS	FED. AID PROJECT		

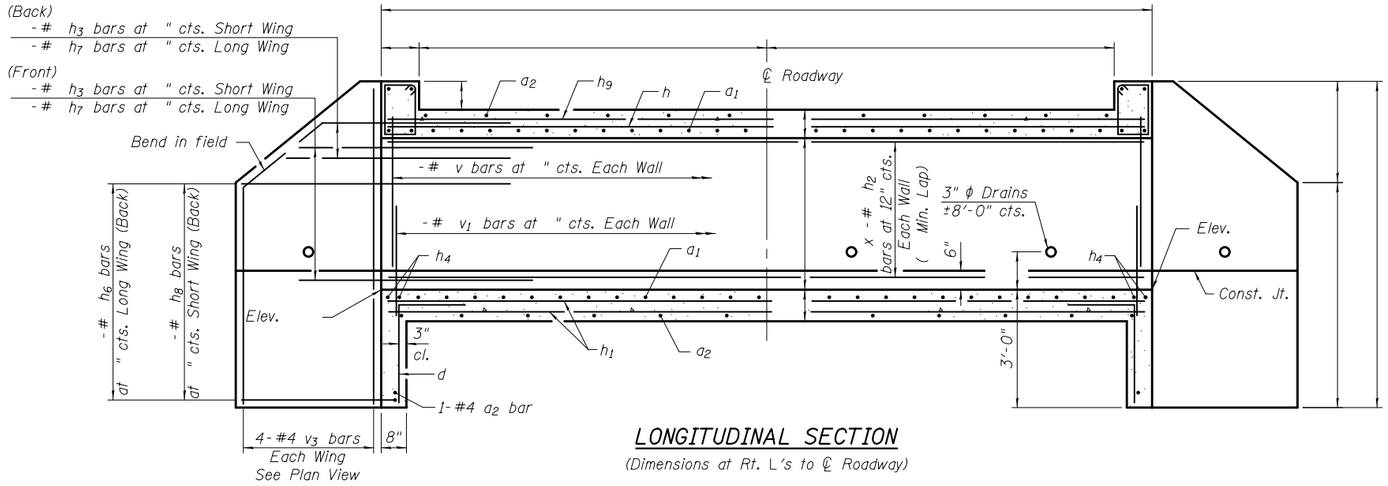

LONGITUDINAL SECTION

(Dimensions at Rt. L's to ℄ Roadway)

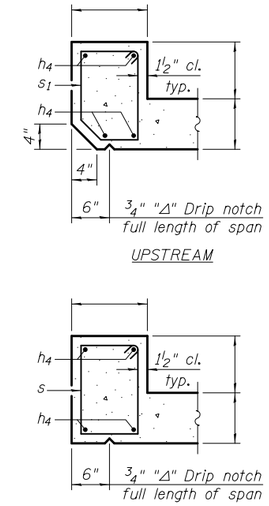

SECTION THRU HEADWALL

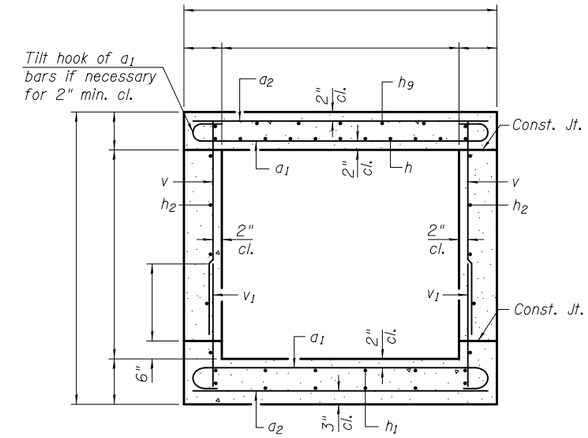

SECTION THRU BARREL

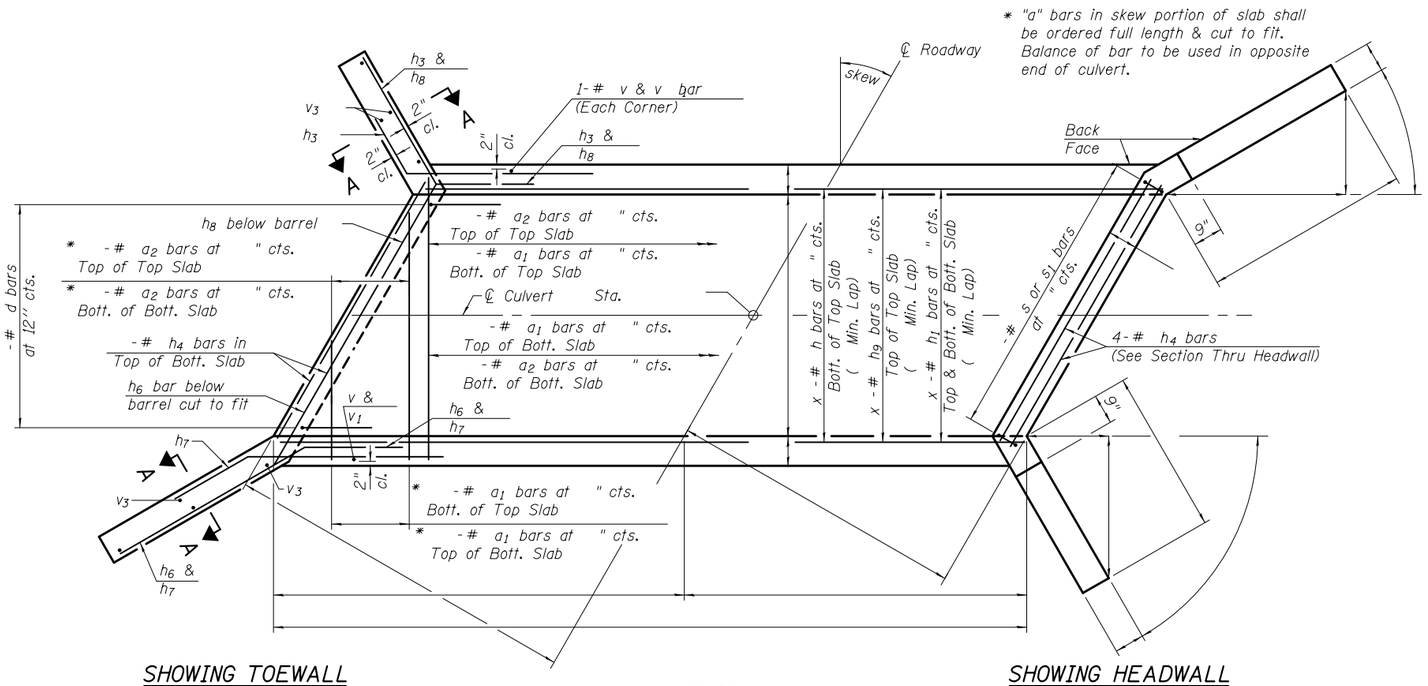

SHOWING TOEWALL

PLAN

SHOWING HEADWALL

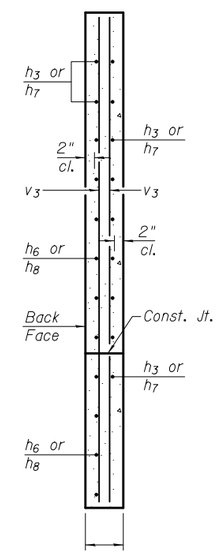

SECTION A-A

BILL OF MATERIAL

Bar	No.	Size	Length	Shape
a_1		#		
a_2		#		
d		#4	4'-5"	
h		#		
h_1		#		
h_2		#		
h_3		#	8'-0"	
h_4		#		
h_6		#		
h_7		#	8'-0"	
h_8		#		
h_9		#		
s		#		
s_1		#		
v		#		
v_1		#		
v_3		#4		
Concrete Box Culverts		Cu. Yd.		
Reinforcement Bars		Pound		

Notes:

A distance of half the length of the wingwall but not less than six feet of the barrel shall be poured monolithically with the wingwalls.

Bars indicated thus 12 x 4-#5 etc. indicates 12 lines of bars with 4 lengths per line.

At the Contractor's option, a longer v_1 bar may be ordered to replace the v bar. No reduction in quantities shall be made for this substitution.

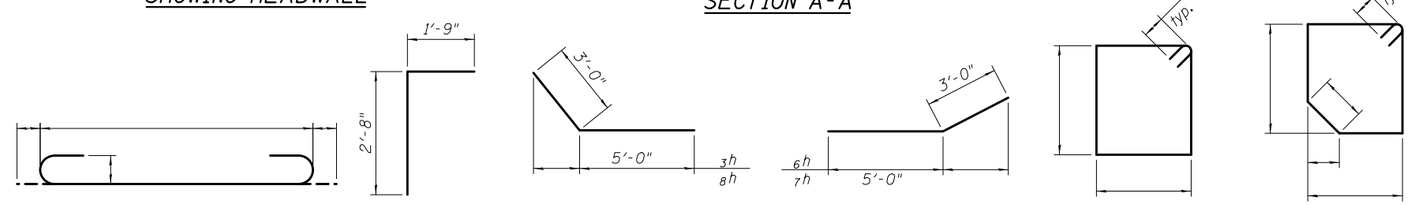

BAR a_1 BAR d BARS h_3 & h_8 BARS h_6 & h_7 BAR s BAR s_1

TSA-SB-HC-RS 10-15-2016

FILE NAME =	USER NAME =	DESIGNED -	REVISED	STATE OF ILLINOIS DEPARTMENT OF TRANSPORTATION	CULVERT DETAILS STRUCTURE NO.	F.A. RTE.	SECTION	COUNTY	TOTAL SHEETS	SHEET NO.
		CHECKED -	REVISED							
	PLOT SCALE =	DRAWN -	REVISED					CONTRACT NO.		
	PLOT DATE =	CHECKED -	REVISED		SHEET NO. OF SHEETS			ILLINOIS FED. AID PROJECT		

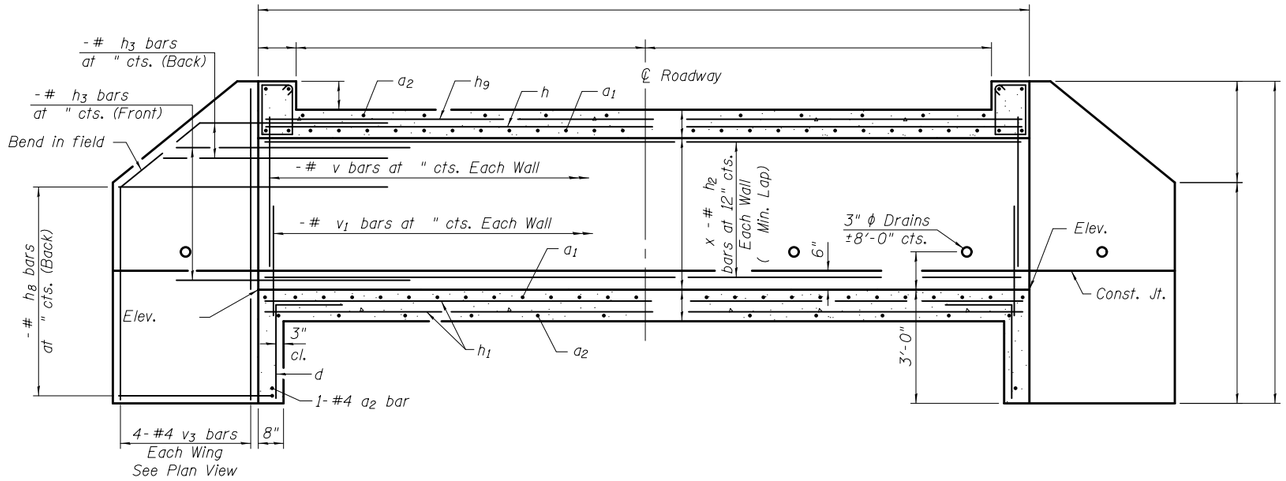

LONGITUDINAL SECTION

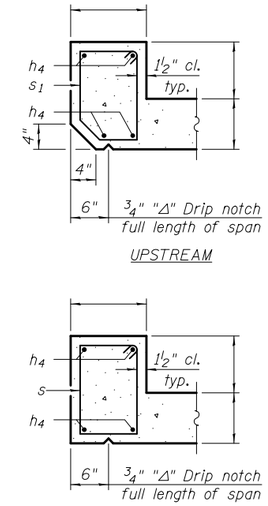

SECTION THRU HEADWALL

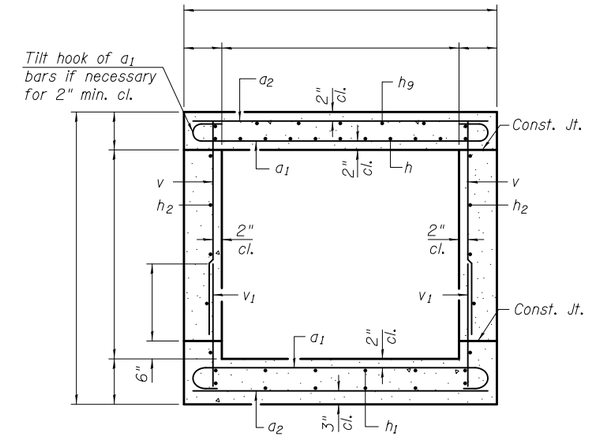

SECTION THRU BARREL

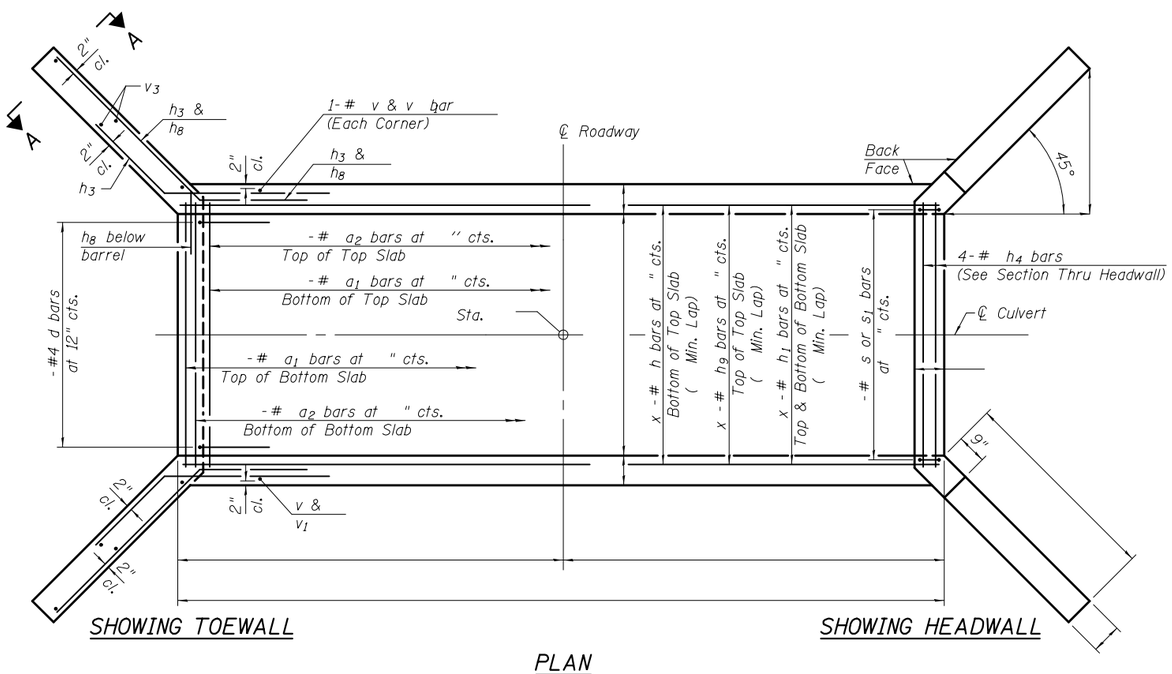

SHOWING TOEWALL

SHOWING HEADWALL

PLAN

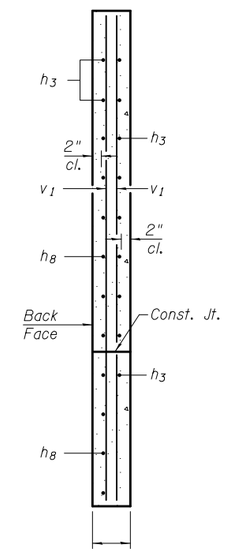

SECTION A-A

BILL OF MATERIAL

Bar	No.	Size	Length	Shape
a_1		#		
a_2		#		
d		#4	4'-5"	
h		#		
h_1		#		
h_2		#		
h_3		#	8'-0"	
h_4		#		
h_8		#		
h_9		#		
s		#		
s_1		#		
v		#		
v_1		#		
v_3		#4		
Concrete Box Culverts		Cu. Yd.		
Reinforcement Bars		Pound		

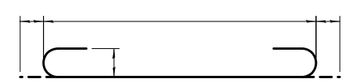

BAR a_1

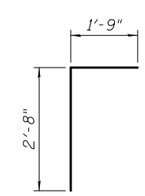

BAR d

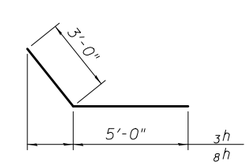

BARS h_3 & h_8

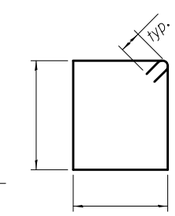

BAR s

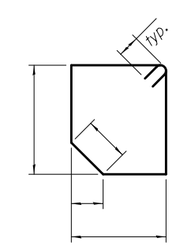

BAR s_1

Notes:

A distance of half the length of the wingwall but not less than six feet of the barrel shall be poured monolithically with the wingwalls.

Bars indicated thus 12 x 4-#5 etc. indicates 12 lines of bars with 4 lengths per line.

At the Contractor's option, a longer v_1 bar may be ordered to replace the v bar. No reduction in quantities shall be made for this substitution.

TSA-SB-HC-ZS 10-15-2016

FILE NAME =	USER NAME =	DESIGNED -	REVISED
		CHECKED -	REVISED
	PLOT SCALE =	DRAWN -	REVISED
	PLOT DATE =	CHECKED -	REVISED

STATE OF ILLINOIS
DEPARTMENT OF TRANSPORTATION

CULVERT DETAILS
STRUCTURE NO.
SHEET NO. OF SHEETS

F.A. RTE.	SECTION	COUNTY	TOTAL SHEETS	SHEET NO.
		CONTRACT NO.		
	ILLINOIS FED. AID PROJECT			

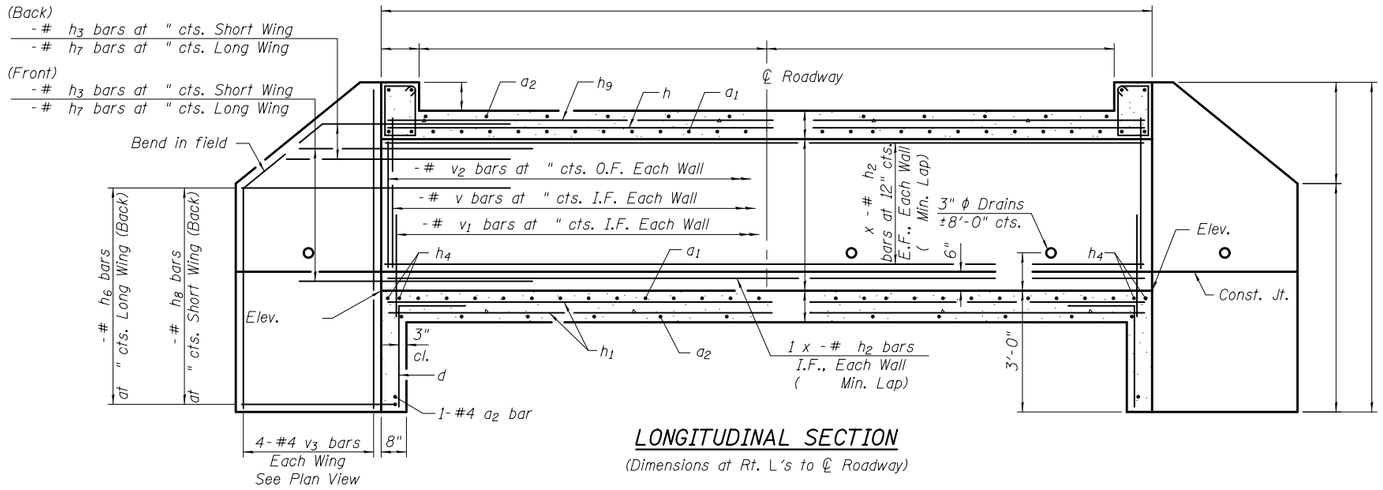

LONGITUDINAL SECTION

(Dimensions at Rt. L's to ℄ Roadway)

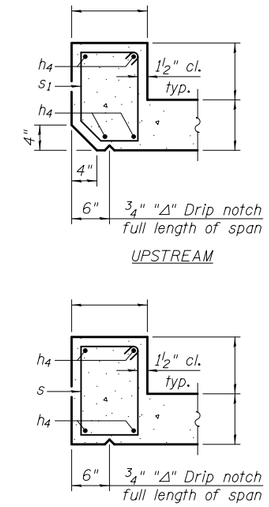

SECTION THRU HEADWALL

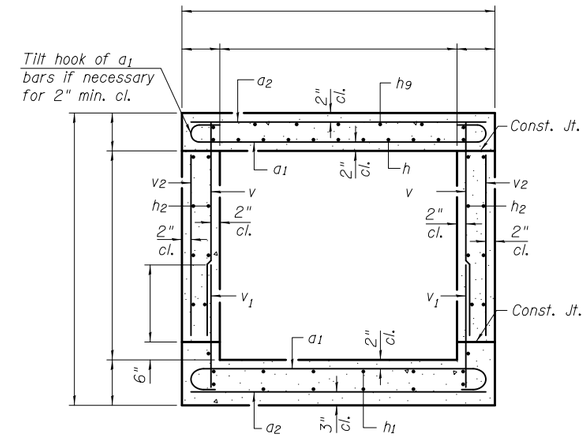

SECTION THRU BARREL

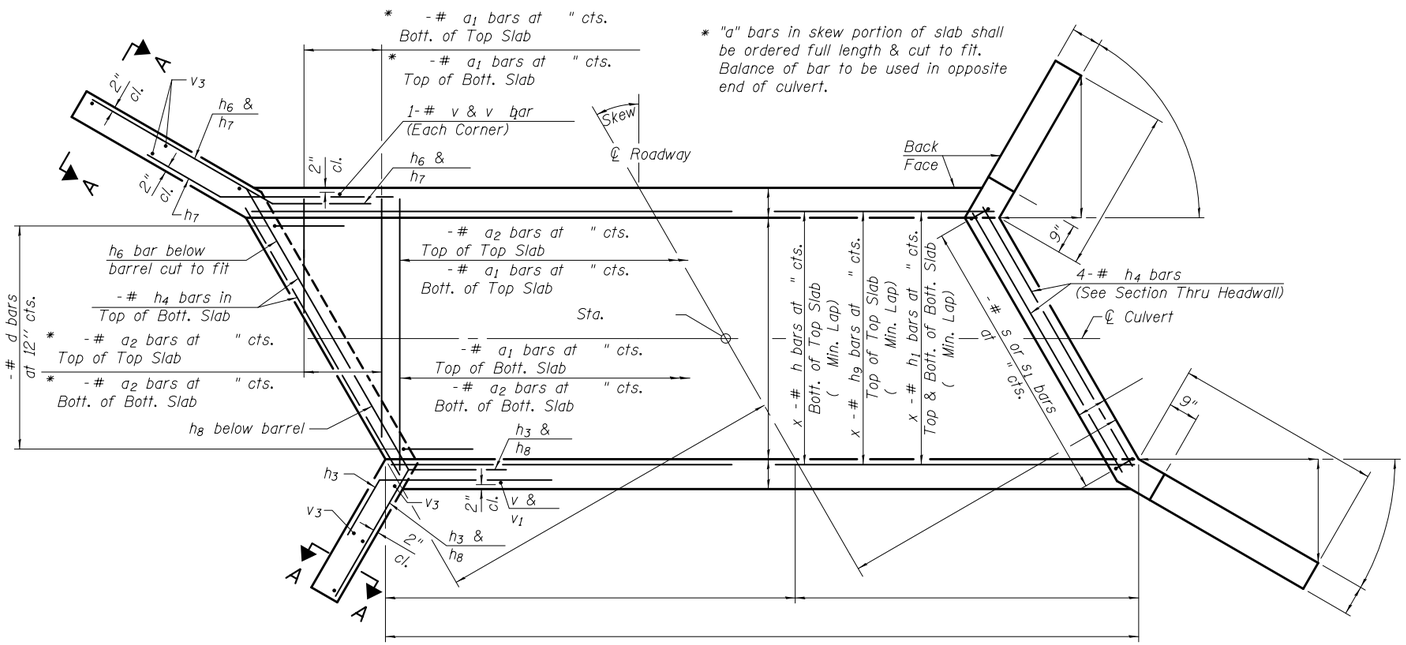

SHOWING TOEWALL

PLAN

SHOWING HEADWALL

* "a" bars in skew portion of slab shall be ordered full length & cut to fit. Balance of bar to be used in opposite end of culvert.

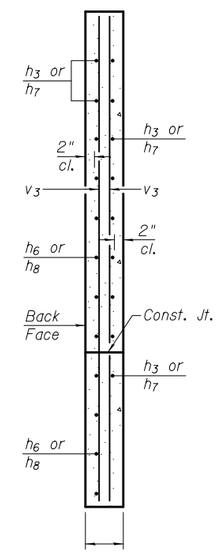

SECTION A-A

BILL OF MATERIAL

Bar	No.	Size	Length	Shape
a_1		#		
a_2		#		
d		#4	4'-5"	
h		#		
h_1		#		
h_2		#		
h_3		#	8'-0"	
h_4		#		
h_6		#		
h_7		#	8'-0"	
h_8		#		
h_9		#		
s		#		
s_1		#		
v		#		
v_1		#		
v_2		#		
v_3		#4		
Concrete Box Culverts			Cu. Yd.	
Reinforcement Bars			Pound	

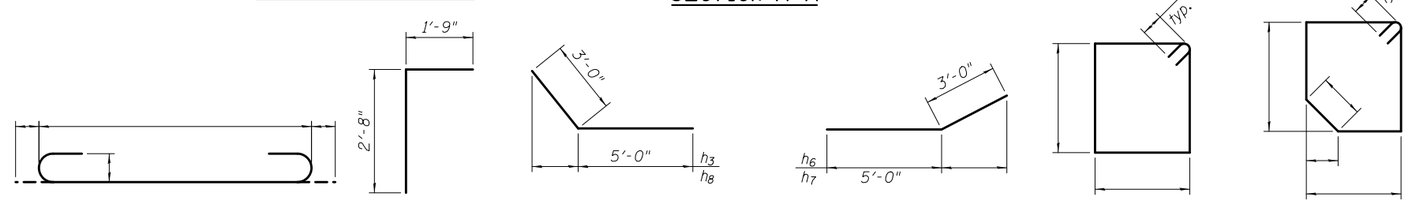

BAR a_1 BAR d BARS h_3 & h_8 BARS h_6 & h_7 BAR s BAR s_1

Notes:

A distance of half the length of the wingwall but not less than six feet of the barrel shall be poured monolithically with the wingwalls.

Bars indicated thus 12 x 4-#5 etc. indicates 12 lines of bars with 4 lengths per line.

At the Contractor's option, a longer v_1 bar may be ordered to replace the v bar. No reduction in quantities shall be made for this substitution.

TSA-SC-HC-LS 10-15-2016

FILE NAME =	USER NAME =	DESIGNED -	REVISED	STATE OF ILLINOIS DEPARTMENT OF TRANSPORTATION	CULVERT DETAILS STRUCTURE NO.	F.A. RTE.	SECTION	COUNTY	TOTAL SHEETS	SHEET NO.
		CHECKED -	REVISED							
	PLOT SCALE =	DRAWN -	REVISED					CONTRACT NO.		
	PLOT DATE =	CHECKED -	REVISED		SHEET NO. OF SHEETS		ILLINOIS FED. AID PROJECT			

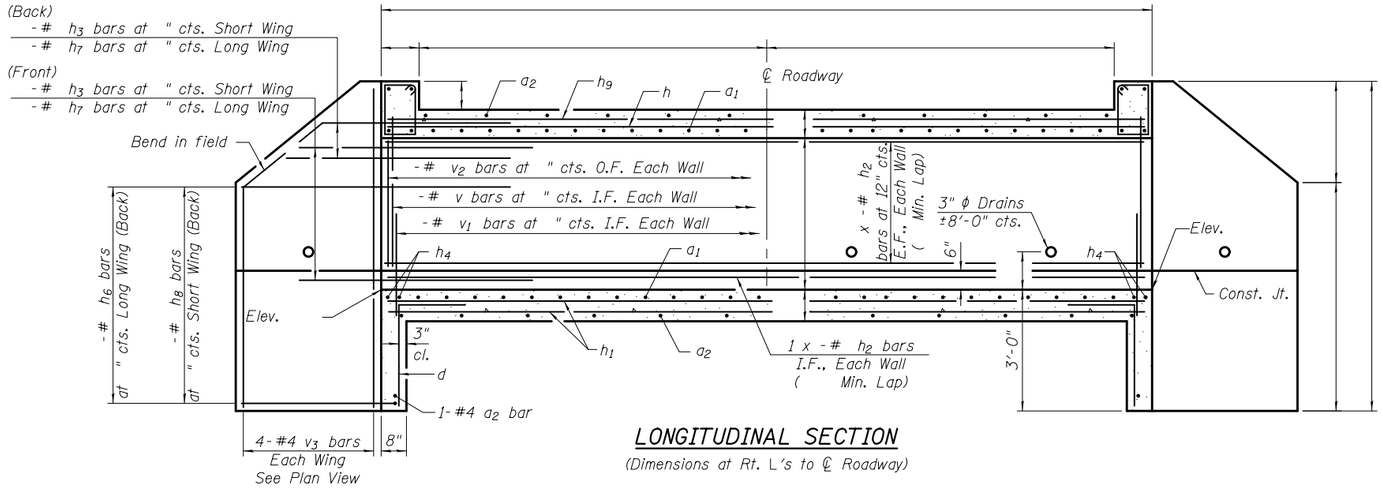

LONGITUDINAL SECTION

(Dimensions at Rt. L's to ℄ Roadway)

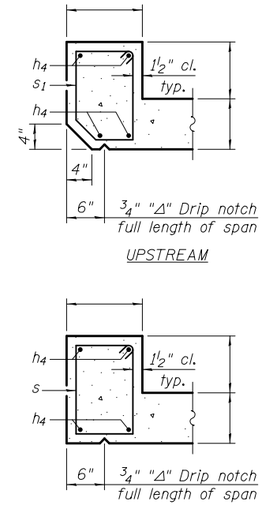

SECTION THRU HEADWALL

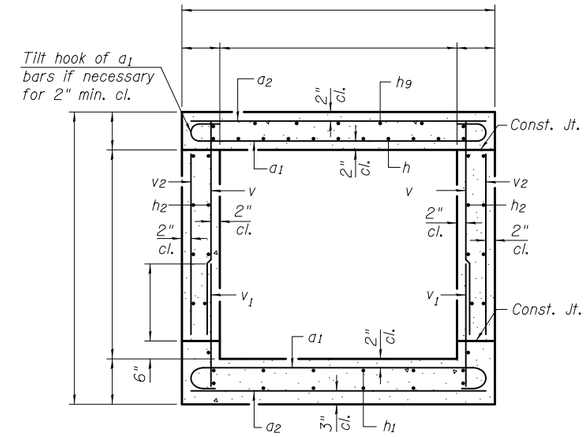

SECTION THRU BARREL

* "a" bars in skew portion of slab shall be ordered full length & cut to fit. Balance of bar to be used in opposite end of culvert.

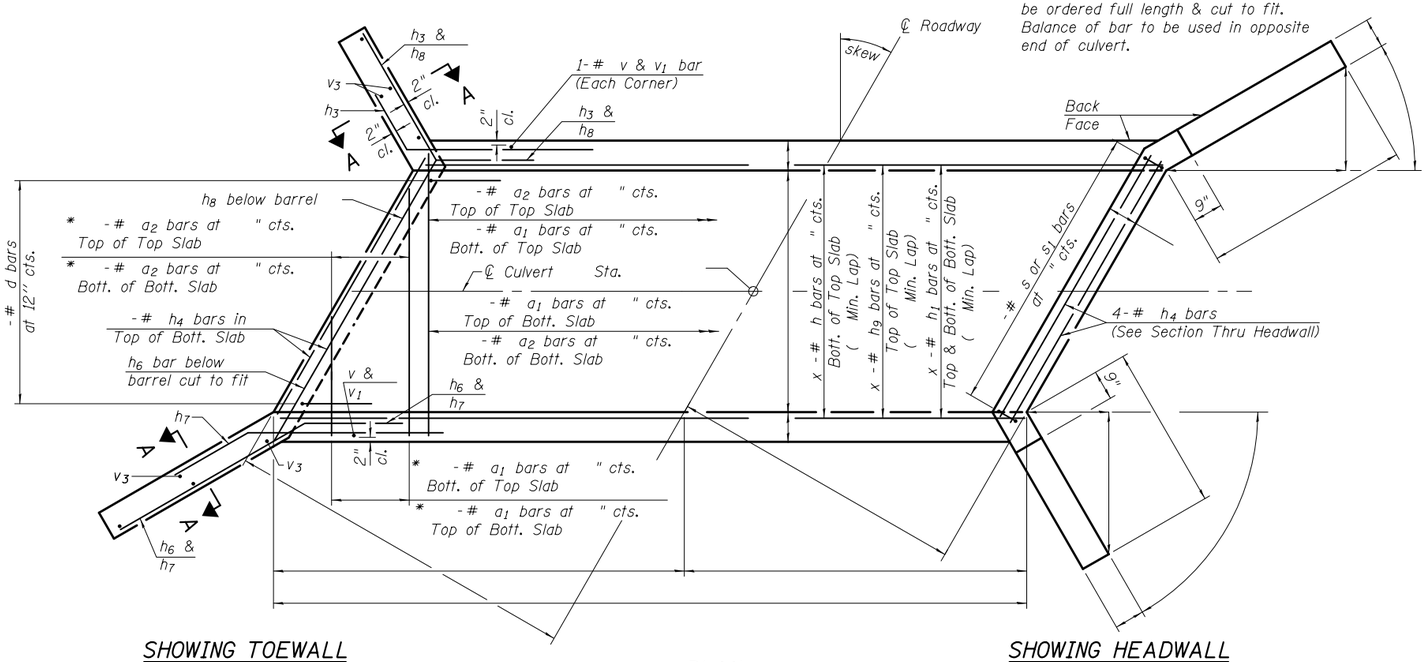

SHOWING TOEWALL

PLAN

SHOWING HEADWALL

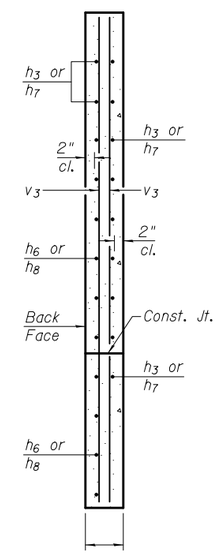

SECTION A-A

BILL OF MATERIAL

Bar	No.	Size	Length	Shape
a_1		#		
a_2		#		
d		#4	4'-5"	
h		#		
h_1		#		
h_2		#		
h_3		#	8'-0"	
h_4		#		
h_6		#		
h_7		#	8'-0"	
h_8		#		
h_9		#		
s		#		
s_1		#		
v		#		
v_1		#		
v_2		#		
v_3		#4		
Concrete Box Culverts		Cu. Yd.		
Reinforcement Bars		Pound		

Notes:

A distance of half the length of the wingwall but not less than six feet of the barrel shall be poured monolithically with the wingwalls.

Bars indicated thus 12 x 4-#5 etc. indicates 12 lines of bars with 4 lengths per line.

At the Contractor's option, a longer v_1 bar may be ordered to replace the v bar. No reduction in quantities shall be made for this substitution.

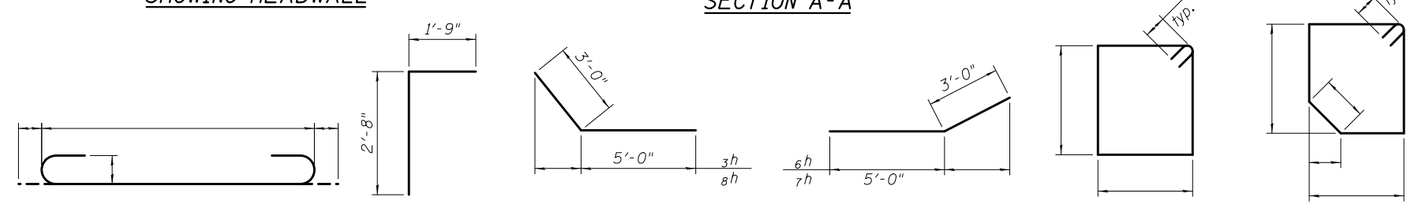

BAR a_1 BAR d BARS h_3 & h_8 BARS h_6 & h_7 BAR s BAR s_1

TSA-SC-HC-RS 10-15-2016

FILE NAME =	USER NAME =	DESIGNED -	REVISED
		CHECKED -	REVISED
	PLOT SCALE =	DRAWN -	REVISED
	PLOT DATE =	CHECKED -	REVISED

STATE OF ILLINOIS
DEPARTMENT OF TRANSPORTATION

CULVERT DETAILS
STRUCTURE NO.
SHEET NO. OF SHEETS

F.A. RTE.	SECTION	COUNTY	TOTAL SHEETS	SHEET NO.
		CONTRACT NO.		
		ILLINOIS FED. AID PROJECT		

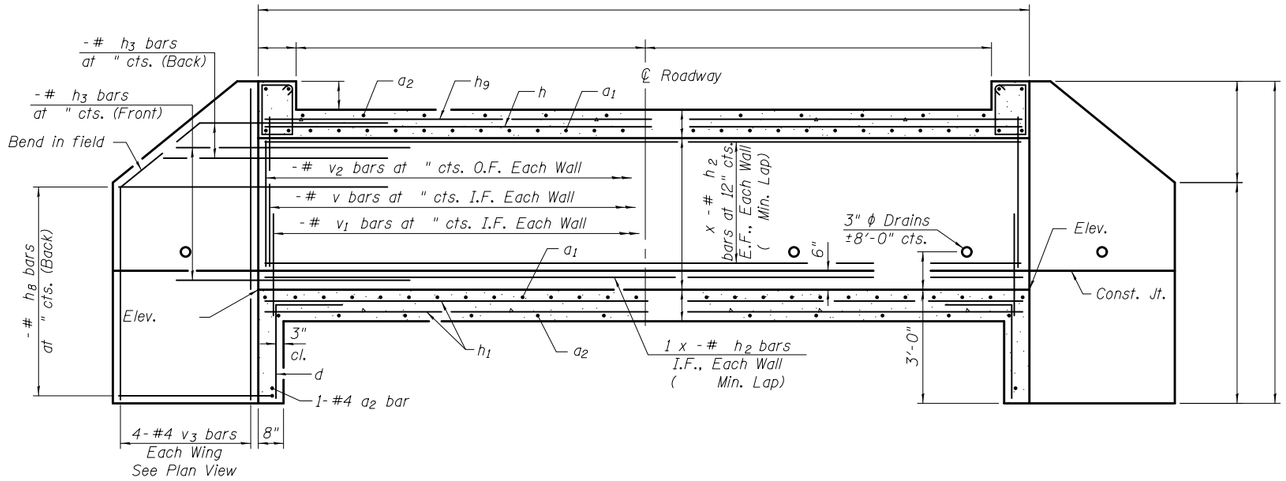

LONGITUDINAL SECTION

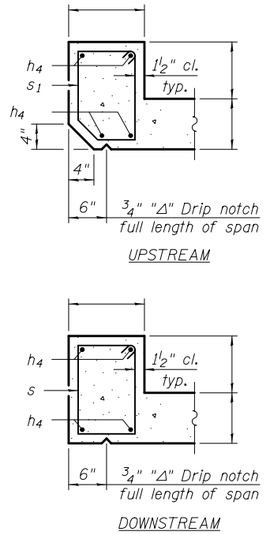

SECTION THRU HEADWALL

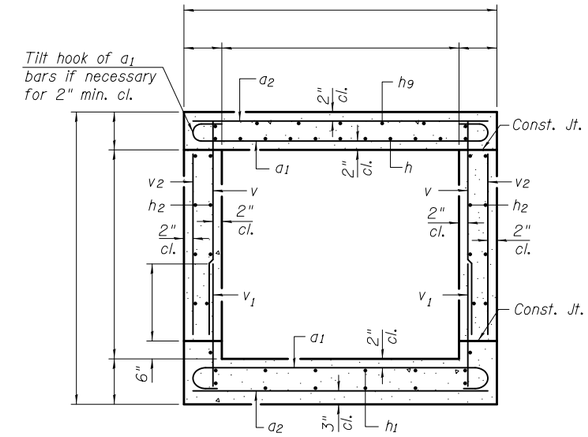

SECTION THRU BARREL

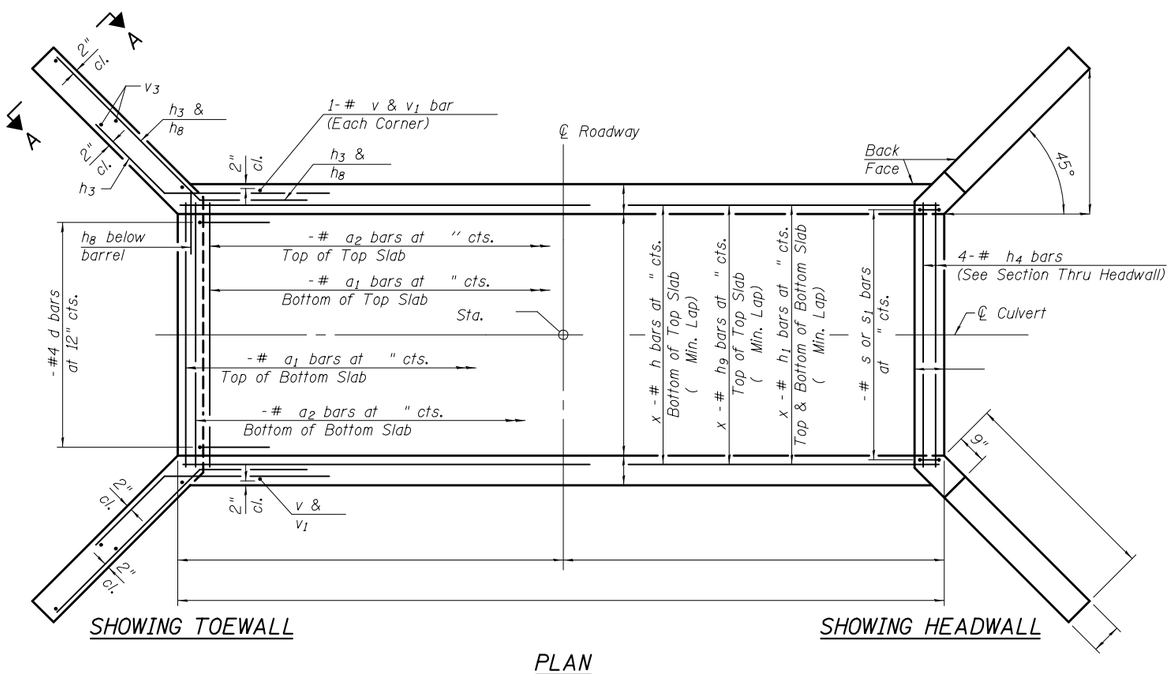

SHOWING TOEWALL

SHOWING HEADWALL

PLAN

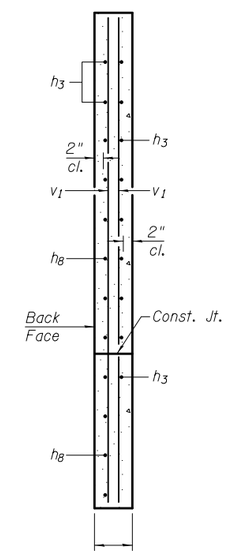

SECTION A-A

BILL OF MATERIAL

Bar	No.	Size	Length	Shape
a_1		#		
a_2		#		
d		#4	4'-5"	
h		#		
h_1		#		
h_2		#		
h_3		#	8'-0"	
h_4		#		
h_8		#		
h_9		#		
s		#		
s_1		#		
v		#		
v_1		#		
v_2		#		
v_3		#4		
Concrete Box Culverts		Cu. Yd.		
Reinforcement Bars		Pound		

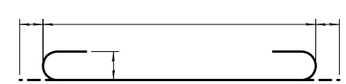

BAR a_1

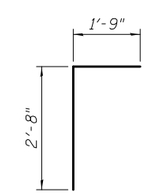

BAR d

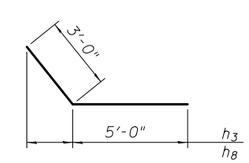

BARS h_3 & h_8

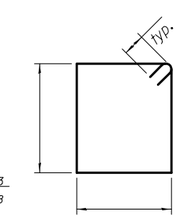

BAR s

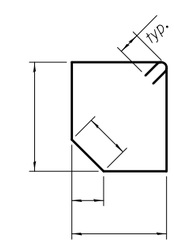

BAR s_1

Notes:

A distance of half the length of the wingwall but not less than six feet of the barrel shall be poured monolithically with the wingwalls.

Bars indicated thus 12 x 4-#5 etc. indicates 12 lines of bars with 4 lengths per line.

At the Contractor's option, a longer v_1 bar may be ordered to replace the v bar. No reduction in quantities shall be made for this substitution.

TSA-SC-HC-ZS 10-15-2016

FILE NAME =	USER NAME =	DESIGNED -	REVISED	STATE OF ILLINOIS DEPARTMENT OF TRANSPORTATION	CULVERT DETAILS STRUCTURE NO.	F.A. RTE.	SECTION	COUNTY	TOTAL SHEETS	SHEET NO.
		CHECKED -	REVISED							
	PLOT SCALE =	DRAWN -	REVISED					CONTRACT NO.		
	PLOT DATE =	CHECKED -	REVISED		SHEET NO. OF SHEETS		ILLINOIS	FED. AID PROJECT		

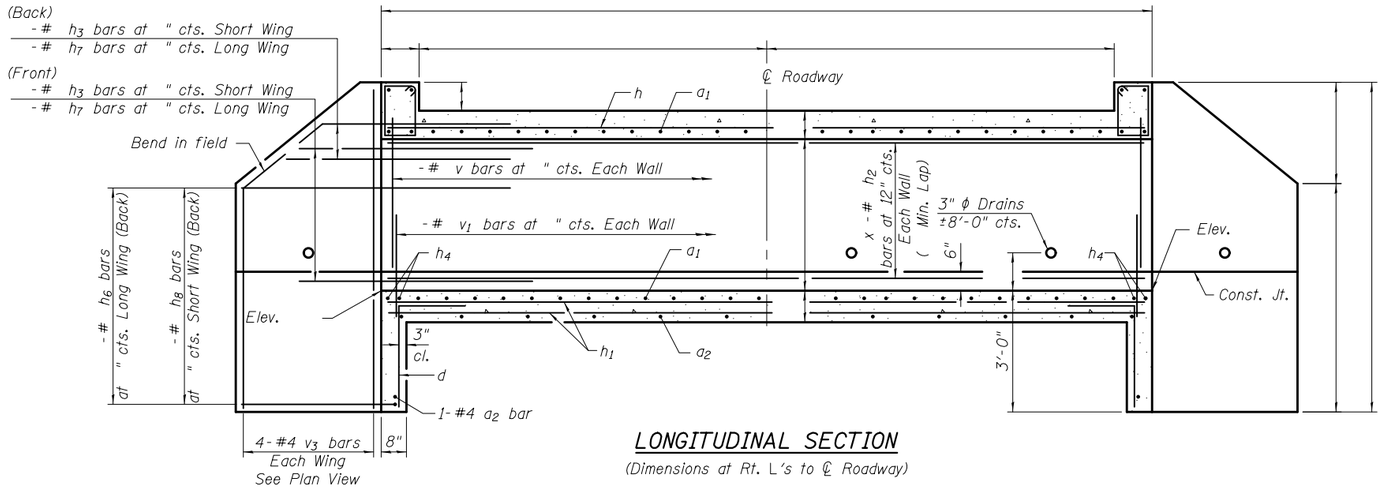

LONGITUDINAL SECTION

(Dimensions at Rt. L's to ℄ Roadway)

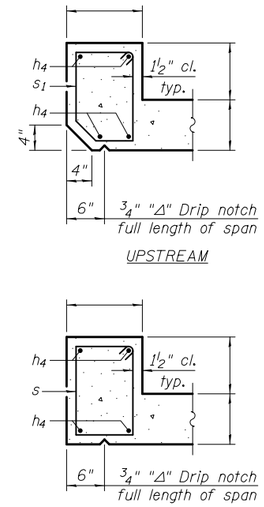

SECTION THRU HEADWALL

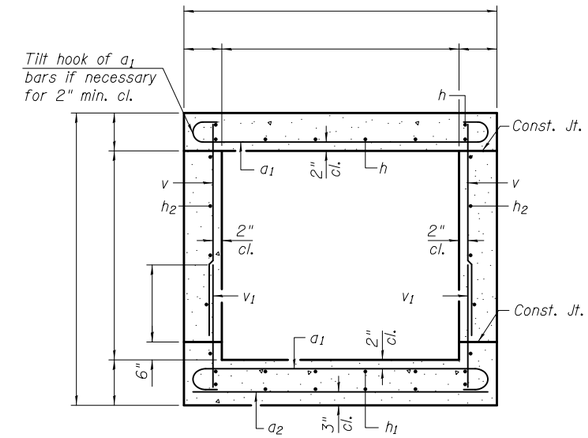

SECTION THRU BARREL

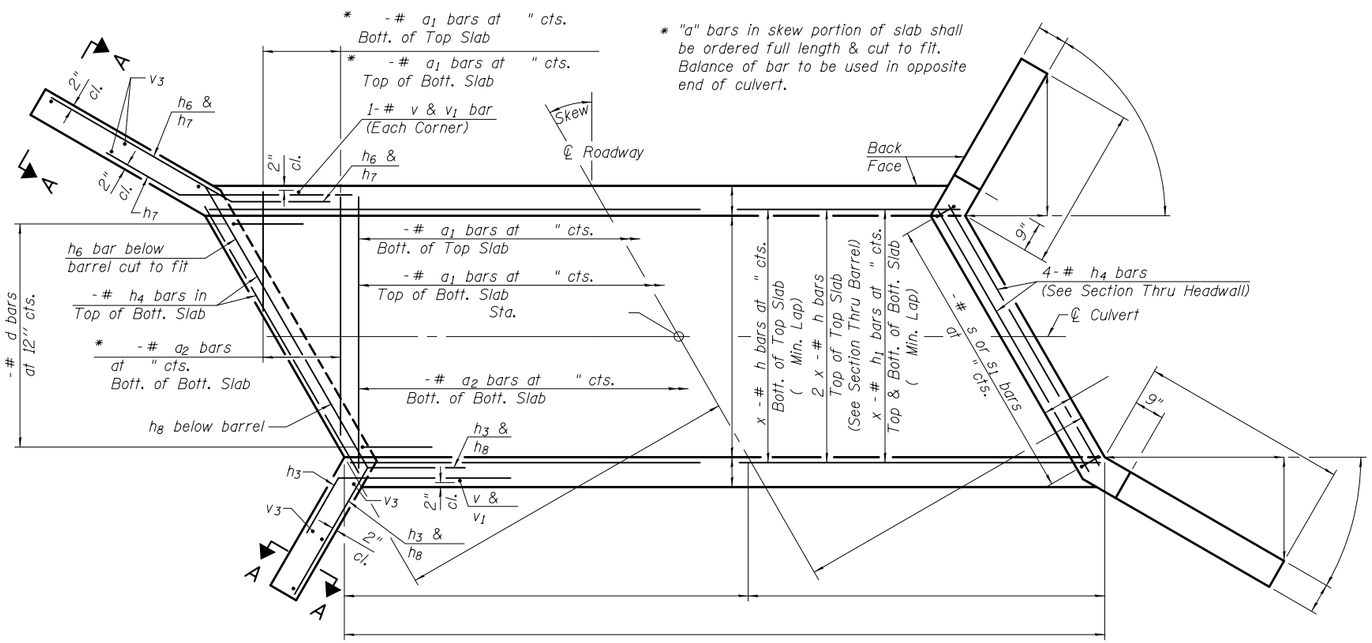

* "a" bars in skew portion of slab shall be ordered full length & cut to fit. Balance of bar to be used in opposite end of culvert.

SHOWING TOEWALL

PLAN

SHOWING HEADWALL

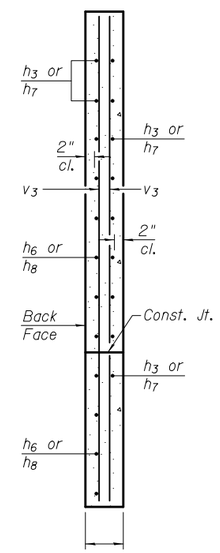

SECTION A-A

BILL OF MATERIAL

Bar	No.	Size	Length	Shape
a_1		#		
a_2		#		
d		#4	4'-5"	
h		#		
h_1		#		
h_2		#		
h_3		#	8'-0"	
h_4		#		
h_6		#		
h_7		#	8'-0"	
h_8		#		
s		#		
s_1		#		
v		#		
v_1		#		
v_3		#4		
Concrete Box Culverts		Cu. Yd.		
Reinforcement Bars		Pound		

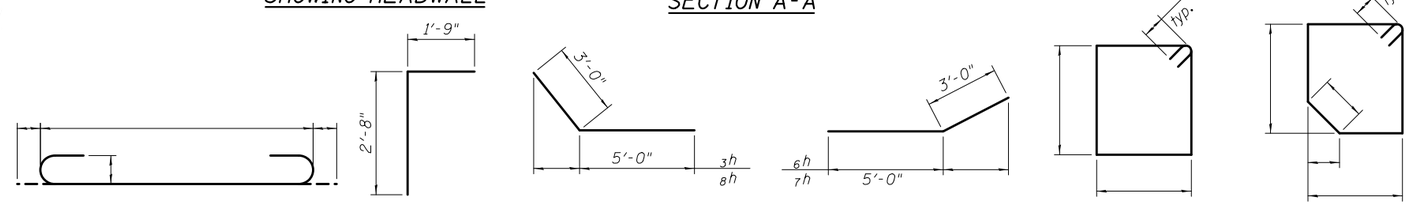

BAR a_1 BAR d BARS h_3 & h_8 BARS h_6 & h_7 BAR s BAR s_1

Notes:

A distance of half the length of the wingwall but not less than six feet of the barrel shall be poured monolithically with the wingwalls.

Bars indicated thus 12 x 4-#5 etc. indicates 12 lines of bars with 4 lengths per line.

At the Contractor's option, a longer v_1 bar may be ordered to replace the v bar. No reduction in quantities shall be made for this substitution.

TSB-SB-HC-LS 10-15-2016

FILE NAME =	USER NAME =	DESIGNED -	REVISED	STATE OF ILLINOIS DEPARTMENT OF TRANSPORTATION	CULVERT DETAILS STRUCTURE NO.	F.A. RTE.	SECTION	COUNTY	TOTAL SHEETS	SHEET NO.
		CHECKED -	REVISED							
	PLOT SCALE =	DRAWN -	REVISED					CONTRACT NO.		
	PLOT DATE =	CHECKED -	REVISED		SHEET NO. OF SHEETS		ILLINOIS	FED. AID PROJECT		

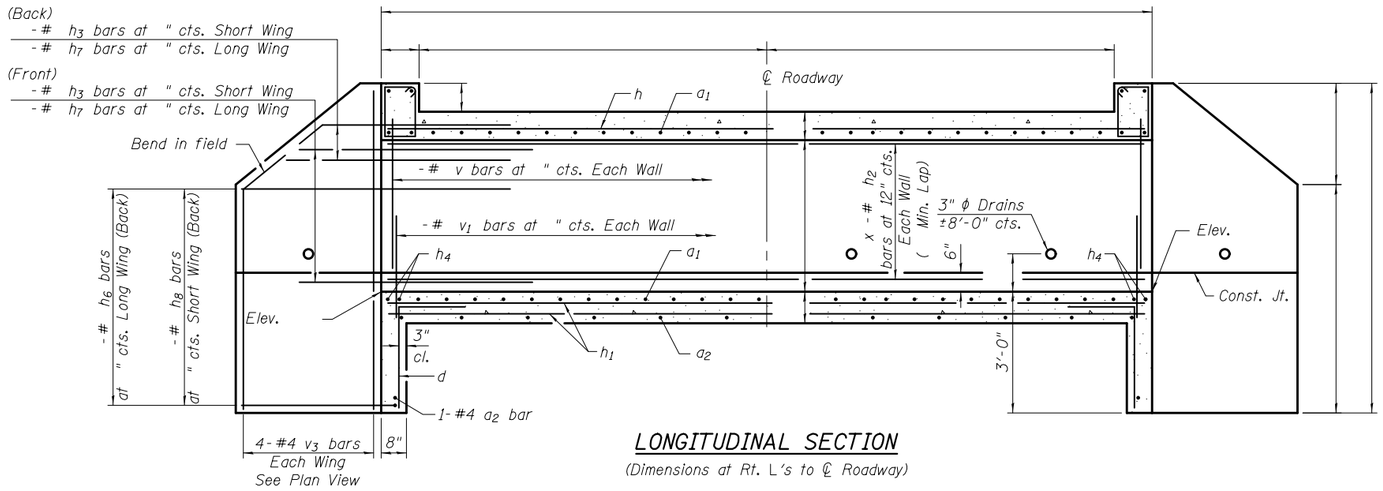

LONGITUDINAL SECTION

(Dimensions at Rt. L's to ℄ Roadway)

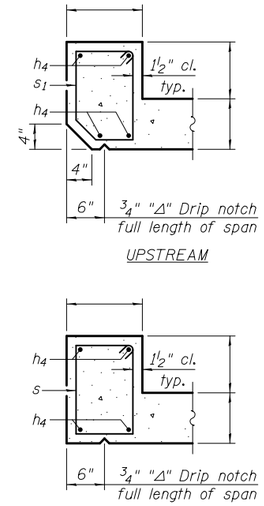

SECTION THRU HEADWALL

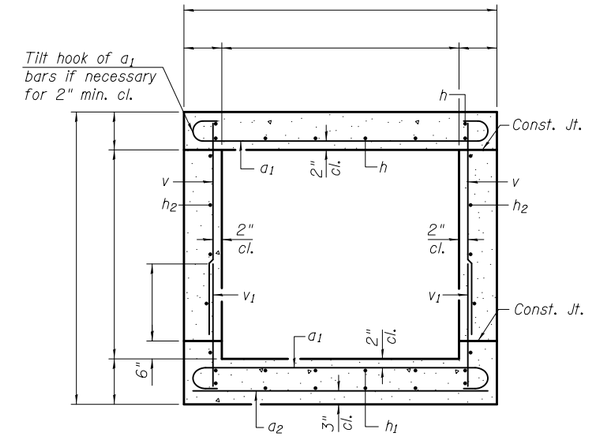

SECTION THRU BARREL

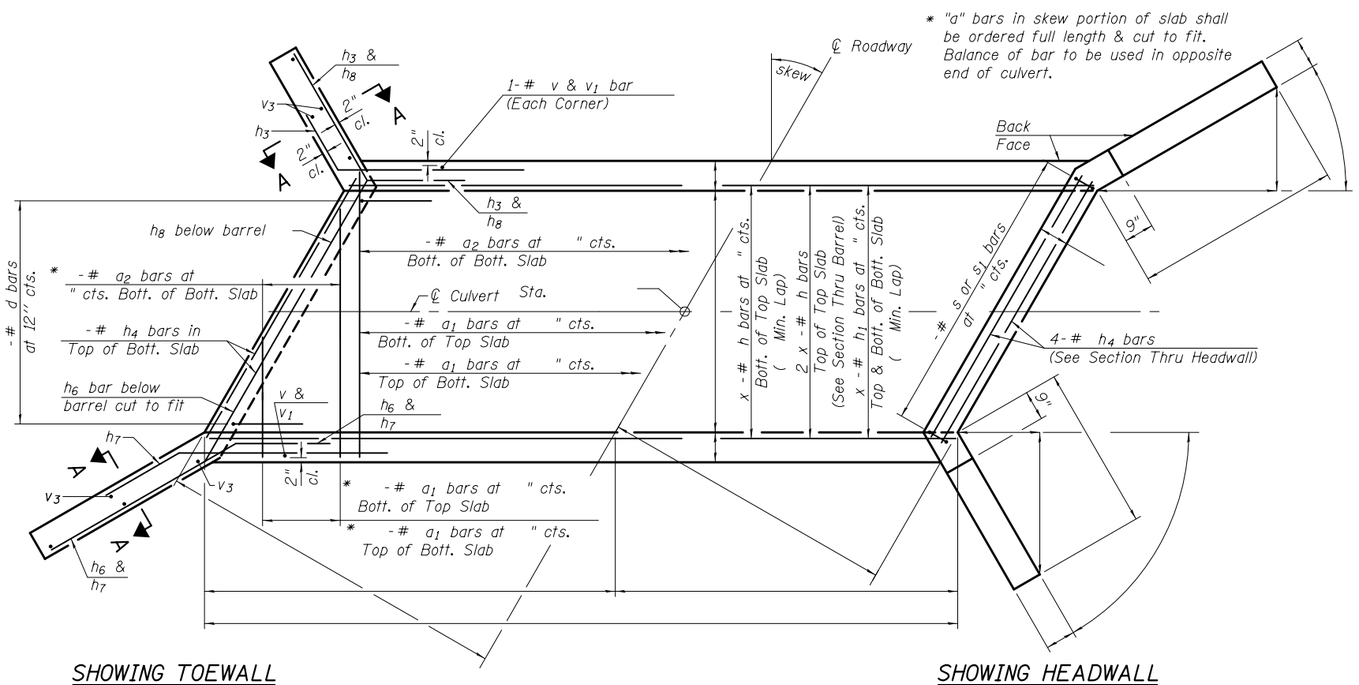

SHOWING TOEWALL

PLAN

SHOWING HEADWALL

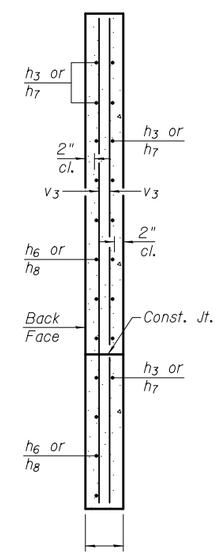

SECTION A-A

BILL OF MATERIAL

Bar	No.	Size	Length	Shape
a_1		#		
a_2		#		
d		#4	4'-5"	
h		#		
h_1		#		
h_2		#		
h_3		#	8'-0"	
h_4		#		
h_6		#		
h_7		#	8'-0"	
h_8		#		
s		#		
s_1		#		
v		#		
v_1		#		
v_3		#4		
Concrete Box Culverts			Cu. Yd.	
Reinforcement Bars			Pound	

Notes:

A distance of half the length of the wingwall but not less than six feet of the barrel shall be poured monolithically with the wingwalls.

Bars indicated thus 12 x 4-#5 etc. indicates 12 lines of bars with 4 lengths per line.

At the Contractor's option, a longer v_1 bar may be ordered to replace the v bar. No reduction in quantities shall be made for this substitution.

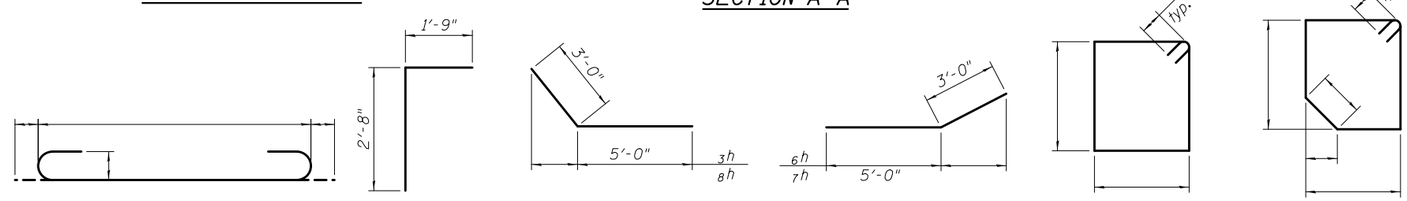

BAR a_1 BAR d BARS h_3 & h_8 BARS h_6 & h_7 BAR s BAR s_1

TSB-SB-HC-RS 10-15-2016

FILE NAME =	USER NAME =	DESIGNED -	REVISED	STATE OF ILLINOIS DEPARTMENT OF TRANSPORTATION	CULVERT DETAILS STRUCTURE NO.	F.A. RTE.	SECTION	COUNTY	TOTAL SHEETS	SHEET NO.
		CHECKED -	REVISED							
	PLOT SCALE =	DRAWN -	REVISED					CONTRACT NO.		
	PLOT DATE =	CHECKED -	REVISED		SHEET NO. OF SHEETS		ILLINOIS	FED. AID PROJECT		

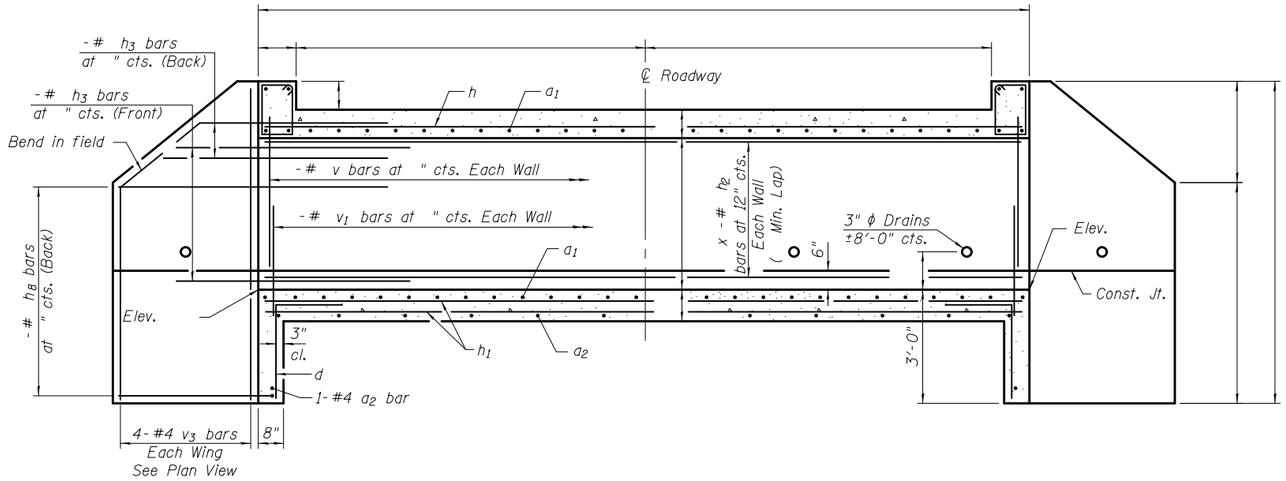

LONGITUDINAL SECTION

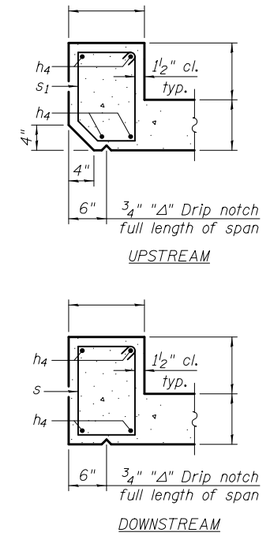

SECTION THRU HEADWALL

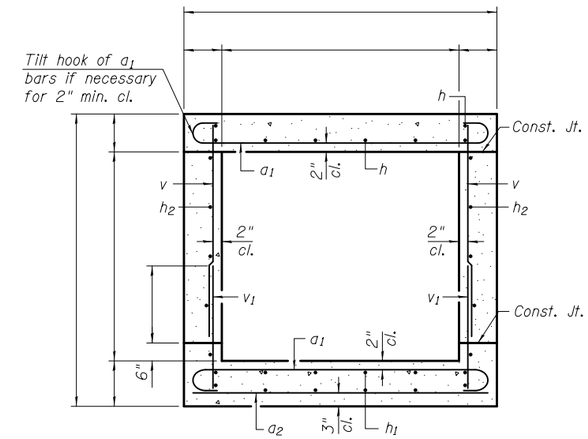

SECTION THRU BARREL

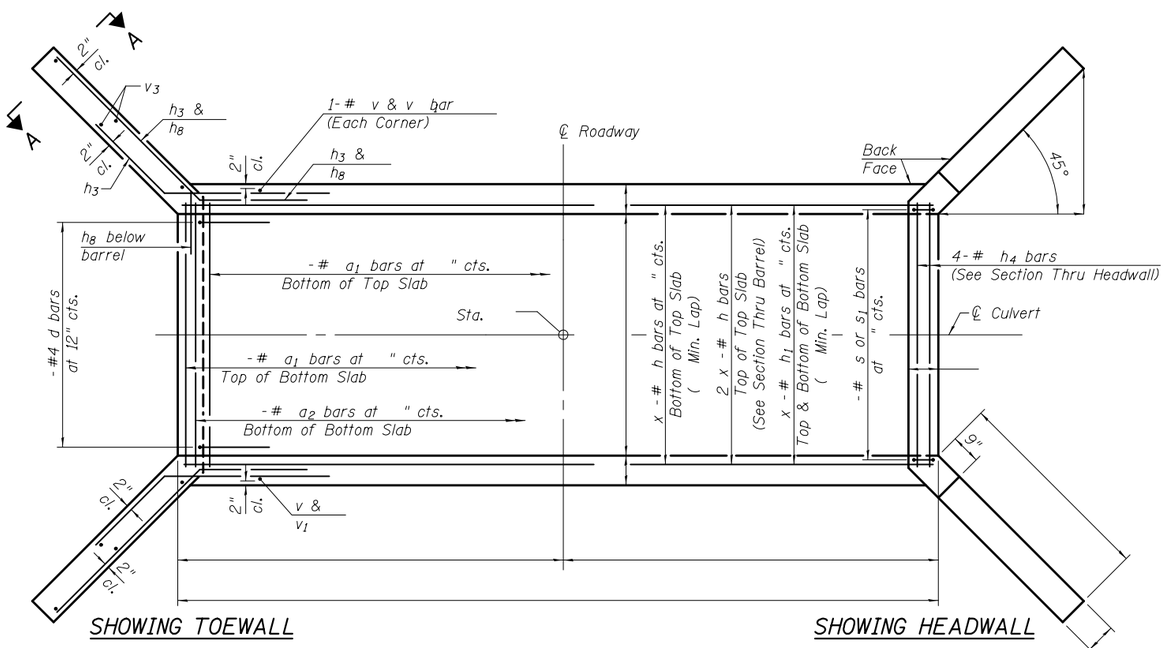

SHOWING TOEWALL

SHOWING HEADWALL

PLAN

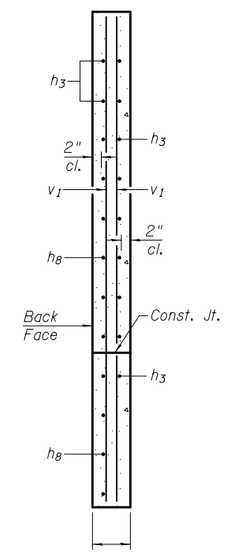

SECTION A-A

BILL OF MATERIAL

Bar	No.	Size	Length	Shape
a_1		#		
a_2		#		
d		#4	4'-5"	
h		#		
h_1		#		
h_2		#		
h_3		#	8'-0"	
h_4		#		
h_8		#		
s		#		
s_1		#		
v		#		
v_1		#		
v_3		#4		
Concrete Box Culverts		Cu. Yd.		
Reinforcement Bars		Pound		

Notes:

A distance of half the length of the wingwall but not less than six feet of the barrel shall be poured monolithically with the wingwalls.

Bars indicated thus 12 x 4-#5 etc. indicates 12 lines of bars with 4 lengths per line.

At the Contractor's option, a longer v_1 bar may be ordered to replace the v bar. No reduction in quantities shall be made for this substitution.

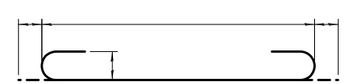

BAR a_1

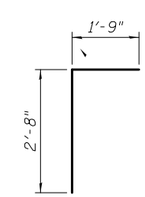

BAR d

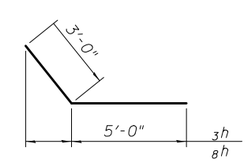

BARS h_3 & h_8

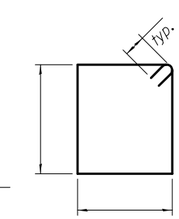

BAR s

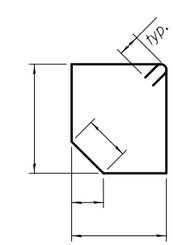

BAR s_1

TSB-SB-HC-ZS 10-15-2016

FILE NAME =	USER NAME =	DESIGNED -	REVISED	STATE OF ILLINOIS DEPARTMENT OF TRANSPORTATION	CULVERT DETAILS STRUCTURE NO.	F.A. RTE.	SECTION	COUNTY	TOTAL SHEETS	SHEET NO.
		CHECKED -	REVISED							
	PLOT SCALE =	DRAWN -	REVISED					CONTRACT NO.		
	PLOT DATE =	CHECKED -	REVISED		SHEET NO. OF SHEETS		ILLINOIS	FED. AID PROJECT		

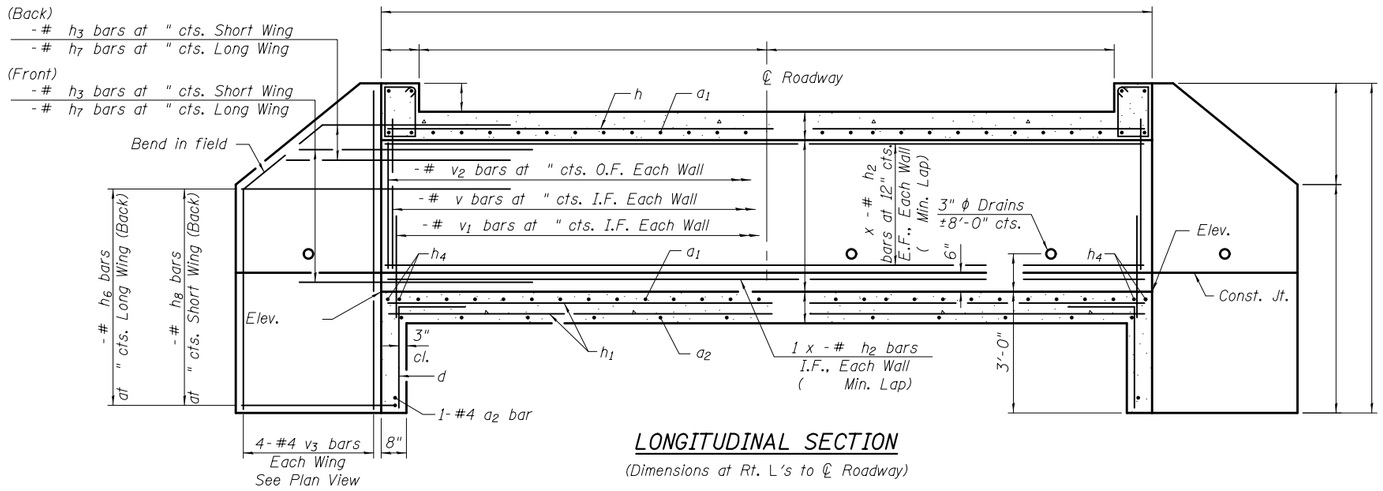

LONGITUDINAL SECTION

(Dimensions at Rt. L's to ℄ Roadway)

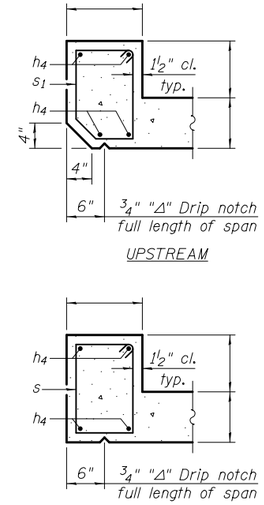

SECTION THRU HEADWALL

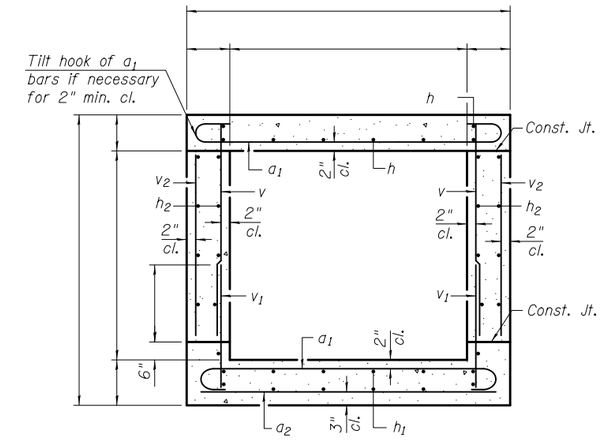

SECTION THRU BARREL

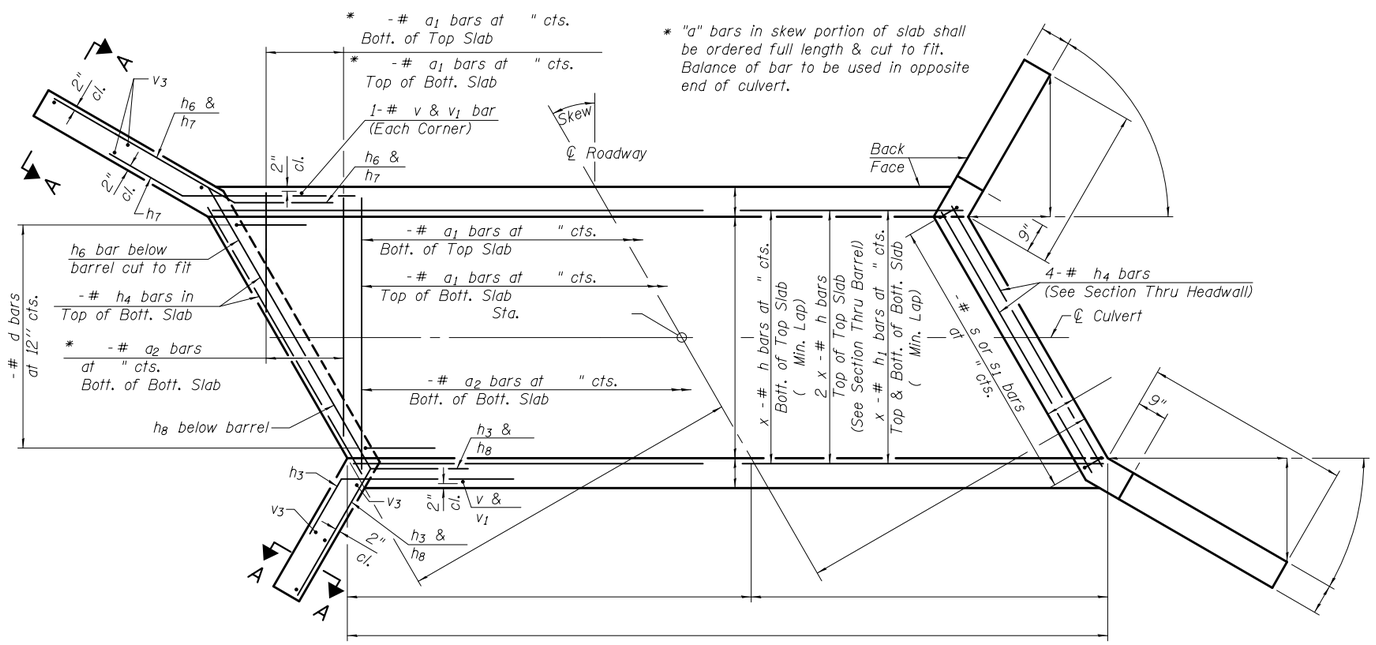

* "a" bars in skew portion of slab shall be ordered full length & cut to fit. Balance of bar to be used in opposite end of culvert.

SHOWING TOEWALL

PLAN

SHOWING HEADWALL

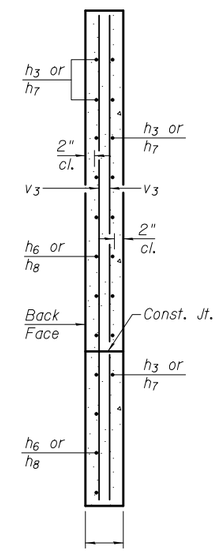

SECTION A-A

BILL OF MATERIAL

Bar	No.	Size	Length	Shape
a_1		#		
a_2		#		
d		#4	4'-5"	
h		#		
h_1		#		
h_2		#		
h_3		#	8'-0"	
h_4		#		
h_6		#		
h_7		#	8'-0"	
h_8		#		
s		#		
s_1		#		
v		#		
v_1		#		
v_2		#		
v_3		#4		
Concrete Box Culverts			Cu. Yd.	
Reinforcement Bars			Pound	

Notes:

A distance of half the length of the wingwall but not less than six feet of the barrel shall be poured monolithically with the wingwalls.

Bars indicated thus 12 x 4-#5 etc. indicates 12 lines of bars with 4 lengths per line.

At the Contractor's option, a longer v_1 bar may be ordered to replace the v bar. No reduction in quantities shall be made for this substitution.

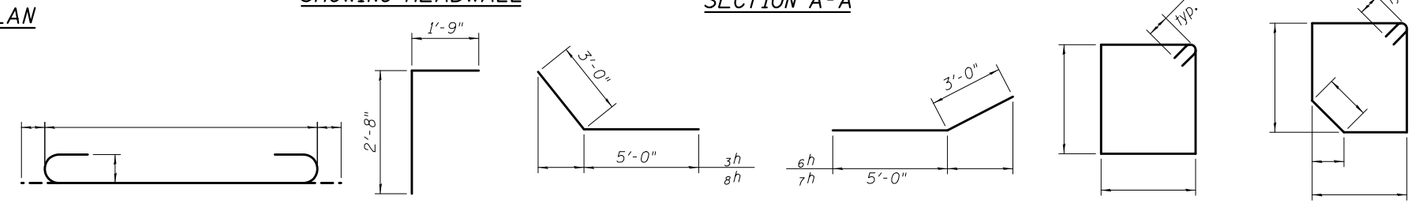

BAR a_1 | BAR d | BARS h_3 & h_8 | BARS h_6 & h_7 | BAR s | BAR s_1

TSB-SC-HC-LS 10-15-2016

FILE NAME =	USER NAME =	DESIGNED -	REVISED
		CHECKED -	REVISED
	PLOT SCALE =	DRAWN -	REVISED
	PLOT DATE =	CHECKED -	REVISED

STATE OF ILLINOIS
DEPARTMENT OF TRANSPORTATION

CULVERT DETAILS
STRUCTURE NO.

SHEET NO. OF SHEETS

F.A. RTE.	SECTION	COUNTY	TOTAL SHEETS	SHEET NO.

CONTRACT NO.

ILLINOIS FED. AID PROJECT

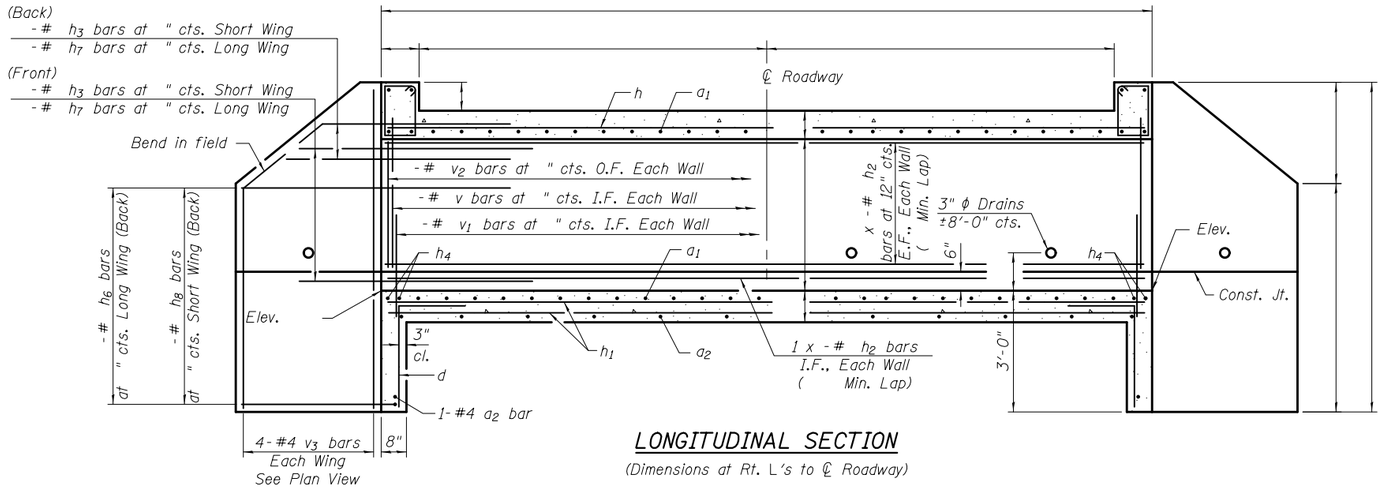

LONGITUDINAL SECTION

(Dimensions at Rt. L's to ℄ Roadway)

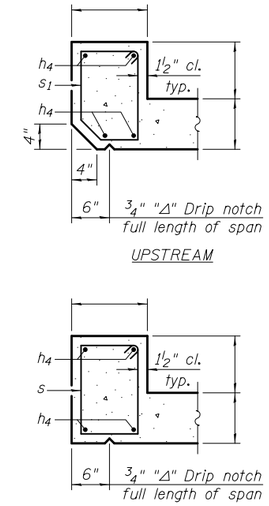

SECTION THRU HEADWALL

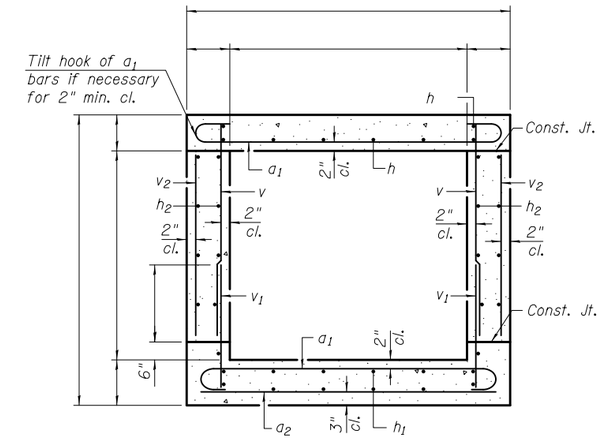

SECTION THRU BARREL

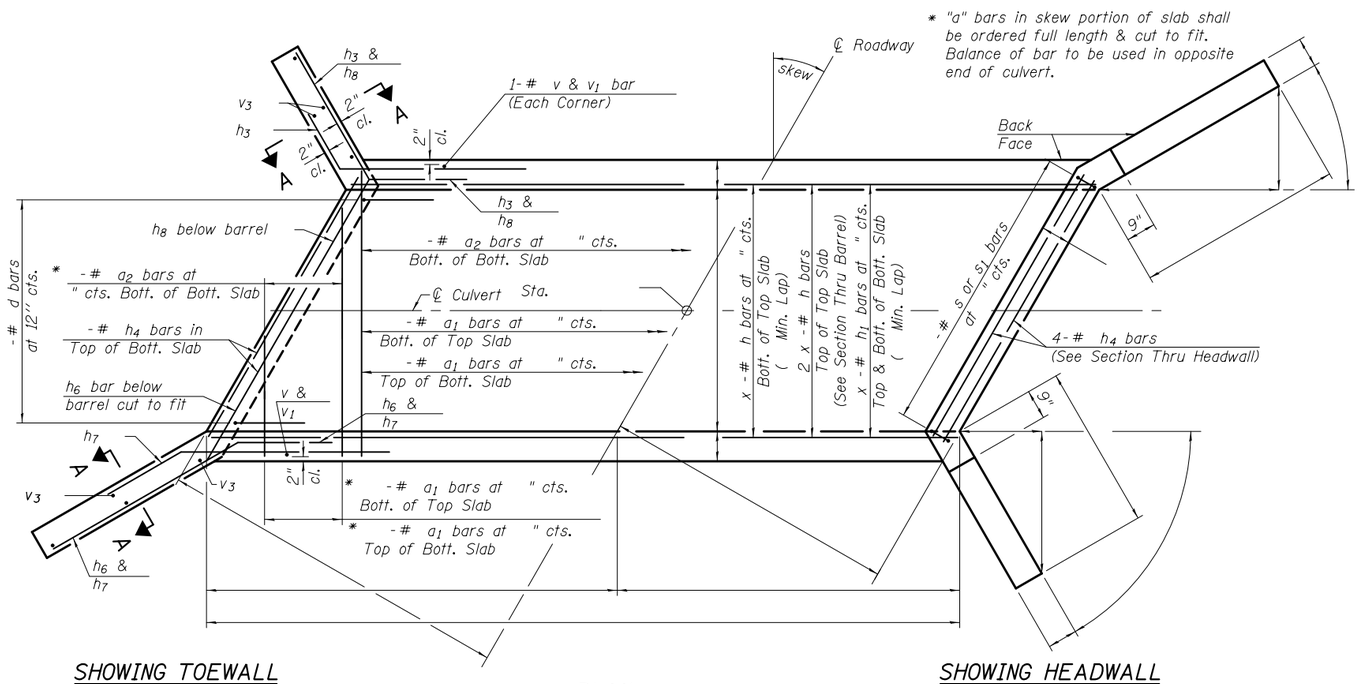

SHOWING TOEWALL

PLAN

SHOWING HEADWALL

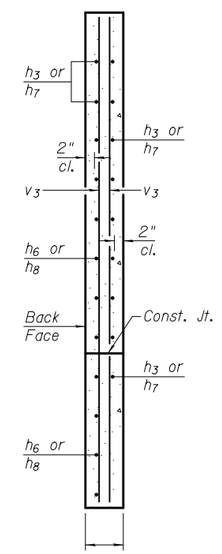

SECTION A-A

BILL OF MATERIAL

Bar	No.	Size	Length	Shape
a_1		#		
a_2		#		
d		#4	4'-5"	
h		#		
h_1		#		
h_2		#		
h_3		#	8'-0"	
h_4		#		
h_6		#		
h_7		#	8'-0"	
h_8		#		
s		#		
s_1		#		
v		#		
v_1		#		
v_2		#		
v_3		#4		
Concrete Box Culverts		Cu. Yd.		
Reinforcement Bars				

Notes:

A distance of half the length of the wingwall but not less than six feet of the barrel shall be poured monolithically with the wingwalls.

Bars indicated thus 12 x 4-#5 etc. indicates 12 lines of bars with 4 lengths per line.

At the Contractor's option, a longer v_1 bar may be ordered to replace the v bar. No reduction in quantities shall be made for this substitution.

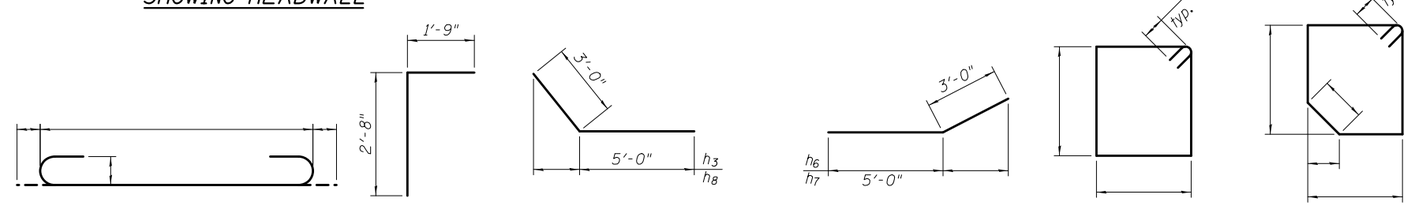

BAR a_1 BAR d BARS h_3 & h_8 BARS h_6 & h_7 BAR s BAR s_1

TSB-SC-HC-RS 10-15-2016

FILE NAME =	USER NAME =	DESIGNED -	REVISED	STATE OF ILLINOIS DEPARTMENT OF TRANSPORTATION	CULVERT DETAILS STRUCTURE NO.	F.A. RTE.	SECTION	COUNTY	TOTAL SHEETS	SHEET NO.
		CHECKED -	REVISED							
	PLOT SCALE =	DRAWN -	REVISED					CONTRACT NO.		
	PLOT DATE =	CHECKED -	REVISED		SHEET NO. OF SHEETS		ILLINOIS	FED. AID PROJECT		

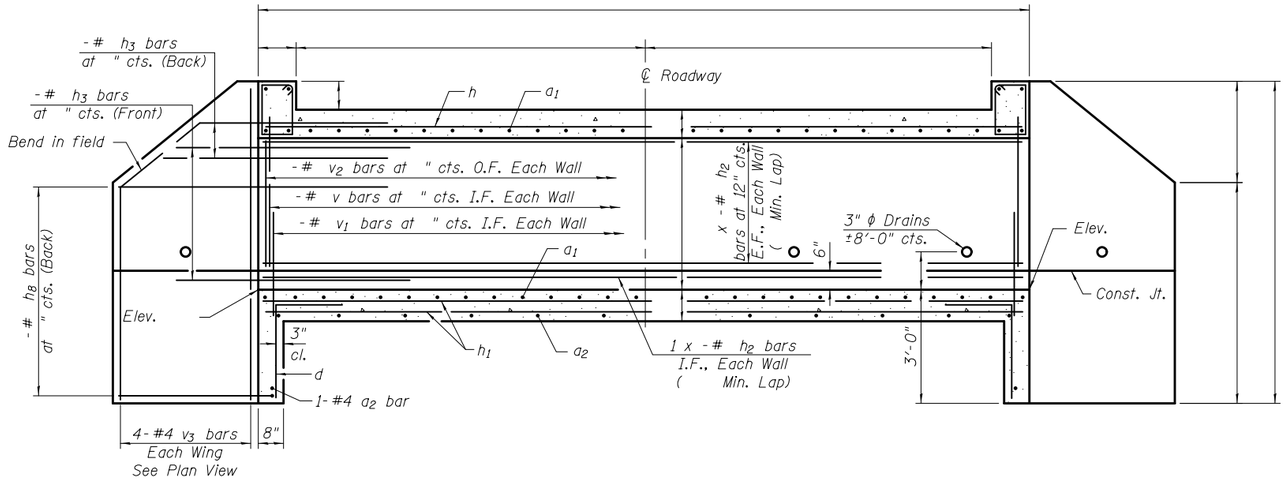

LONGITUDINAL SECTION

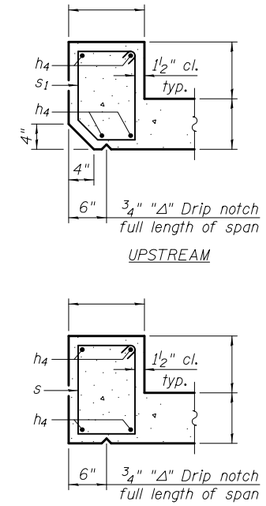

SECTION THRU HEADWALL

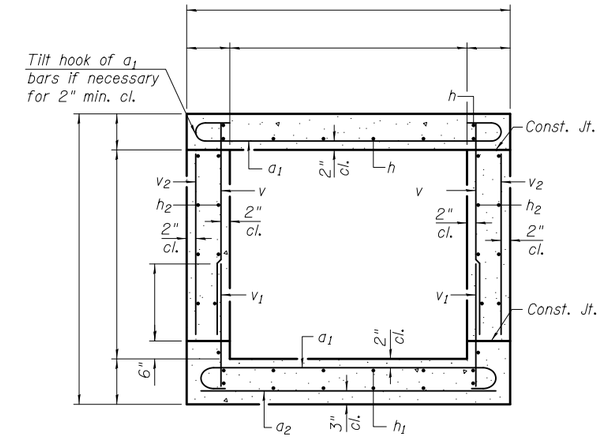

SECTION THRU BARREL

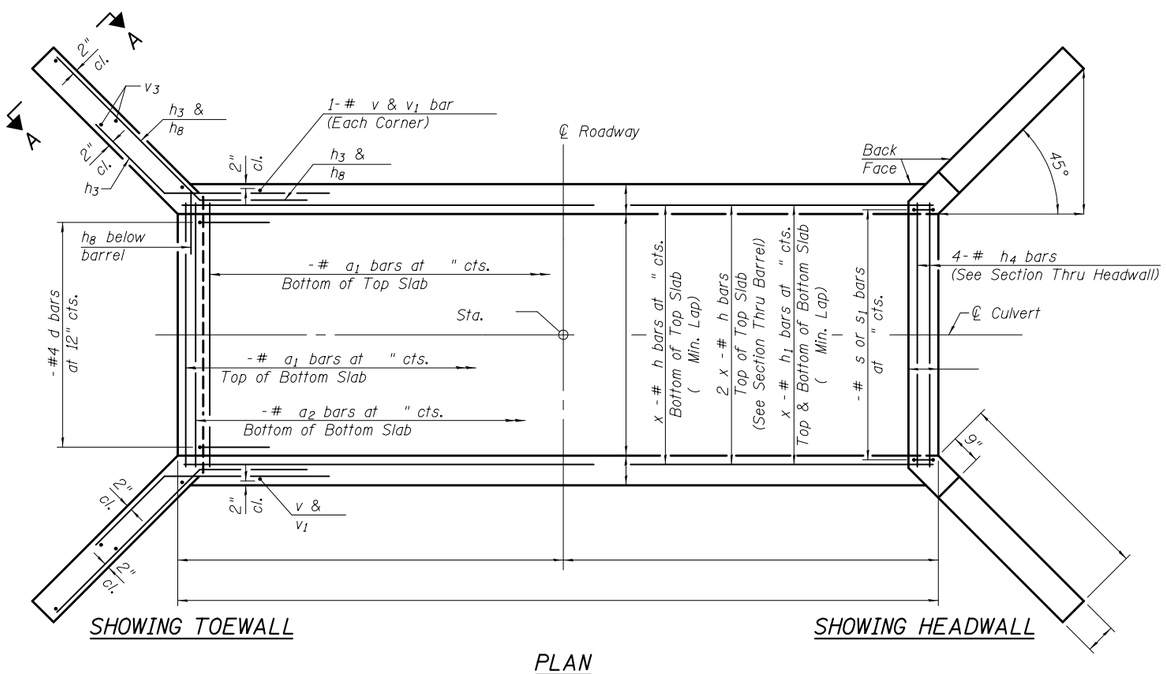

SHOWING TOEWALL

SHOWING HEADWALL

PLAN

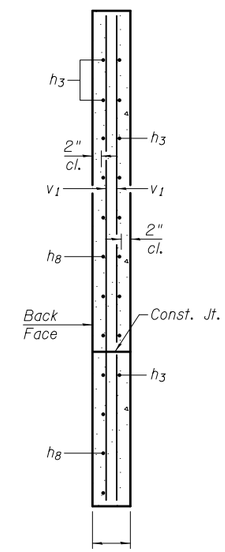

SECTION A-A

BILL OF MATERIAL

Bar	No.	Size	Length	Shape
a_1		#		
a_2		#		
d		#4	4'-5"	
h		#		
h_1		#		
h_2		#		
h_3		#	8'-0"	
h_4		#		
h_8		#		
s		#		
s_1		#		
v		#		
v_1		#		
v_2		#		
v_3		#4		
Concrete Box Culverts		Cu. Yd.		
Reinforcement Bars		Pound		

Notes:

A distance of half the length of the wingwall but not less than six feet of the barrel shall be poured monolithically with the wingwalls.

Bars indicated thus 12 x 4-#5 etc. indicates 12 lines of bars with 4 lengths per line.

At the Contractor's option, a longer v_1 bar may be ordered to replace the v bar. No reduction in quantities shall be made for this substitution.

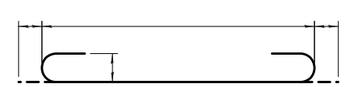

BAR a_1

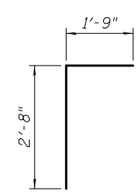

BAR d

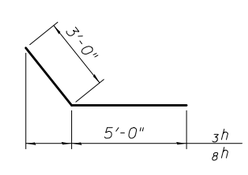

BARS h_3 & h_8

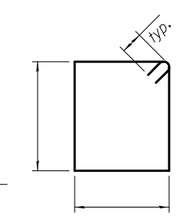

BAR s

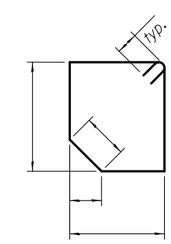

BAR s_1

TSB-SC-HC-ZS 10-15-2016

FILE NAME =	USER NAME =	DESIGNED -	REVISED	STATE OF ILLINOIS DEPARTMENT OF TRANSPORTATION	CULVERT DETAILS STRUCTURE NO.	F.A. RTE.	SECTION	COUNTY	TOTAL SHEETS	SHEET NO.
		CHECKED -	REVISED							
	PLOT SCALE =	DRAWN -	REVISED					CONTRACT NO.		
	PLOT DATE =	CHECKED -	REVISED		SHEET NO. OF SHEETS		ILLINOIS	FED. AID PROJECT		