CELL / MODEL NAME	DESCRIPTION	DATE
SP-SK-DETAILS_2 of 2	Soldier Pile Wingwall, Skewed Culverts, Details	10/15/2016
SP-ZS-DETAILS_2 of 2	Soldier Pile Wingwall, Zero Skew Culverts, Details	10/15/2016
TSA-SB-SP-LS_1 of 2	2 rows of reinf in top slab; 1 row of reinf in each sidewall; Soldier Pile Wingwalls, Left Skew	10/15/2016
TSA-SB-SP-RS_1 of 2	2 rows of reinf in top slab; 1 row of reinf in each sidewall; Soldier Pile Wingwalls, Right Skew	10/15/2016
TSA-SB-SP-ZS_1 of 2	2 rows of reinf in top slab; 1 row of reinf in each sidewall; Soldier Pile Wingwalls, Zero Skew	10/15/2016
TSA-SC-SP-LS_1 of 2	2 rows of reinf in top slab; 2 rows of reinf in each sidewall; Soldier Pile Wingwalls, Left Skew	10/15/2016
TSA-SC-SP-RS_1 of 2	2 rows of reinf in top slab; 2 rows of reinf in each sidewall; Soldier Pile Wingwalls, Right Skew	10/15/2016
TSA-SC-SP-ZS_1 of 2	2 rows of reinf in top slab; 2 rows of reinf in each sidewall; Soldier Pile Wingwalls, Zero Skew	10/15/2016
TSB-SB-SP-LS_1 of 2	1 row of reinf in top slab; 1 row of reinf in each sidewall; Soldier Pile Wingwalls, Left Skew	10/15/2016
TSB-SB-SP-RS_1 of 2	1 row of reinf in top slab; 1 row of reinf in each sidewall; Soldier Pile Wingwalls, Right Skew	10/15/2016
TSB-SB-SP-ZS_1 of 2	1 row of reinf in top slab; 1 row of reinf in each sidewall; Soldier Pile Wingwalls, Zero Skew	10/15/2016
TSB-SC-SP-LS_1 of 2	1 row of reinf in top slab; 2 rows of reinf in each sidewall; Soldier Pile Wingwalls, Left Skew	10/15/2016
TSB-SC-SP-RS_1 of 2	1 row of reinf in top slab; 2 rows of reinf in each sidewall; Soldier Pile Wingwalls, Right Skew	10/15/2016
TSB-SC-SP-ZS_1 of 2	1 row of reinf in top slab; 2 rows of reinf in each sidewall Soldier Pile Wingwalls, Zero Skew	10/15/2016

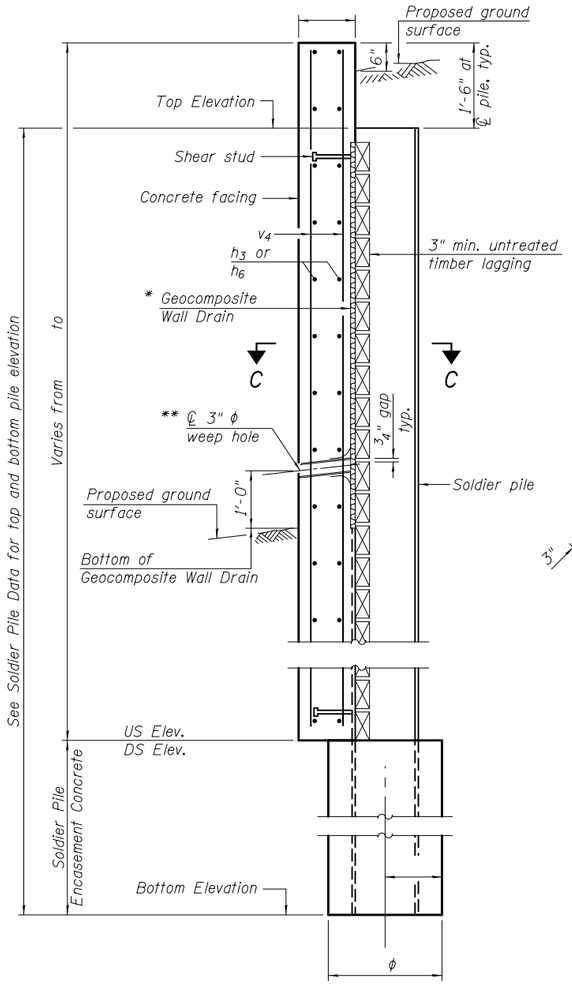

SECTION A-A

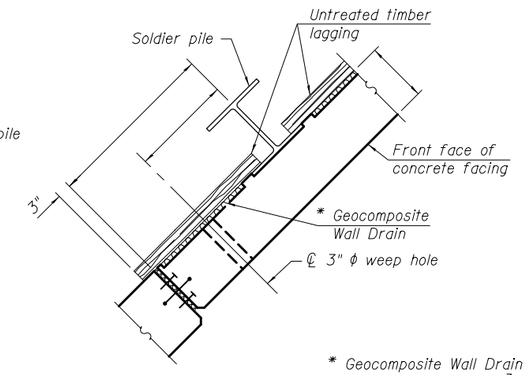

SECTION B-B

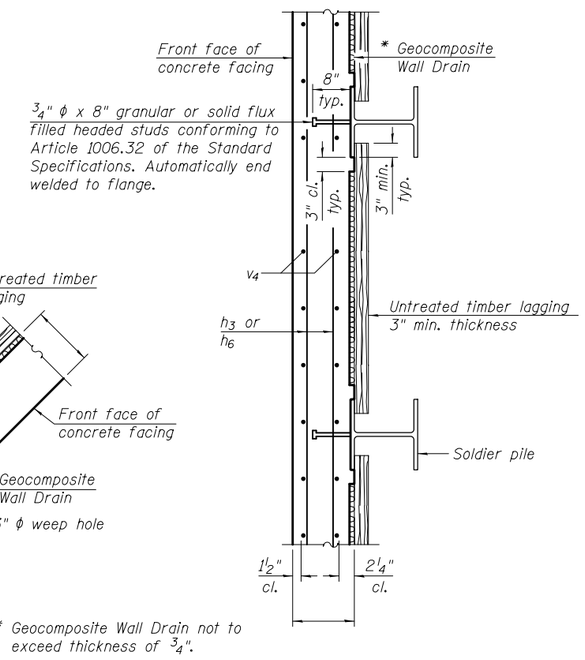

SECTION C-C

SOLDIER PILE WINGWALL CONSTRUCTION SEQUENCE

1. Construct concrete box culvert.
2. Drill soldier piles (may be completed prior to completing construction of box culvert).
3. Install timber lagging.
4. Place and compact backfill behind wingwall to top of timber lagging.
5. Install shear stud connectors.
6. Place reinforcement and form concrete wall face.
7. Cast concrete wingwall facing.
8. Remove temporary soldier pile and timber lagging outside limits of the wingwall.
9. Place remainder of backfill to proposed ground surface elevations on both sides of wall (backfill front side of wall as much as possible before backfilling is completed).

Notes:

The temporary soldier pile is required to facilitate backfilling of the wingwall prior to casting the concrete face. The temporary soldier pile shall conform to the construction requirements for permanent soldier piles except material for the temporary soldier pile may be new or used. After the concrete face has been allowed to cure, the temporary soldier pile shall be removed 2 ft below streambed along with the adjacent timber lagging. Cost of removing and disposing temporary soldier pile and timber lagging shall be included in the cost of Concrete Box Culverts.

In order to minimize excessive deflection and/or stresses in the soldier piles, compaction equipment used within 4 ft of the back face of the timber lagging shall be limited to lightweight mechanical tampers, rollers, or vibratory systems.

The Contractor is responsible for the design and performance of the timber lagging using no less than a 3 inch nominal rough-sawn thickness and timber with a minimum allowable bending stress of 1000 psi.

SOLDIER PILE DATA

Soldier Pile	Pile Size	Top Elevation	Bottom Elevation	Total Height (Ft.)	Number of Shear Studs

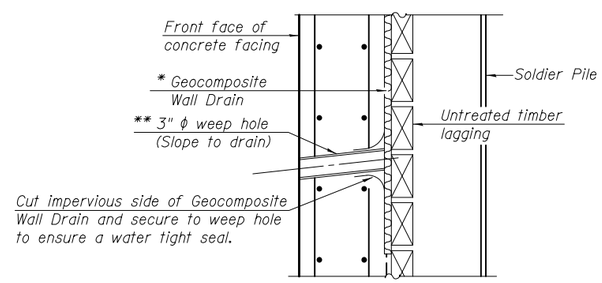

WEEP HOLE DRAIN DETAIL

** Cost of the weep hole drain and connection to the Geocomposite Wall Drain are included in the cost of Concrete Box Culverts.

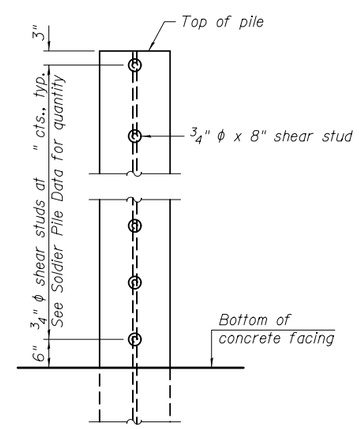

SHEAR STUD DETAIL

(Elevation of pile shown)

SP-SK-DETAILS

10-15-2016

(Sheet 2 of 2)

FILE NAME =	USER NAME =	DESIGNED -	REVISED	STATE OF ILLINOIS DEPARTMENT OF TRANSPORTATION	CULVERT DETAILS STRUCTURE NO.	F.A. RTE.	SECTION	COUNTY	TOTAL SHEETS	SHEET NO.
		CHECKED -	REVISED							
	PLOT SCALE =	DRAWN -	REVISED					CONTRACT NO.		
	PLOT DATE =	CHECKED -	REVISED		SHEET NO. OF SHEETS		ILLINOIS	FED. AID PROJECT		

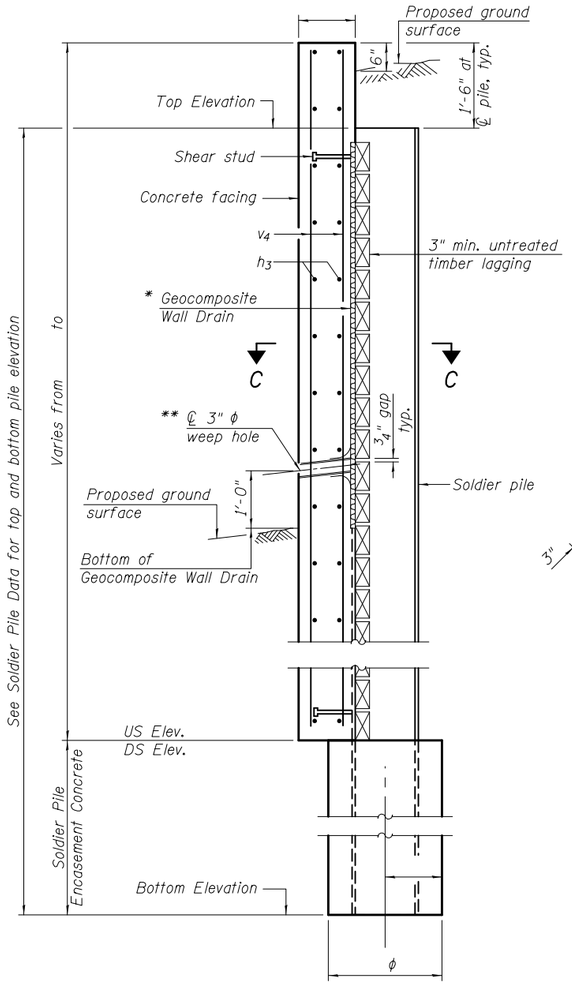

SECTION A-A

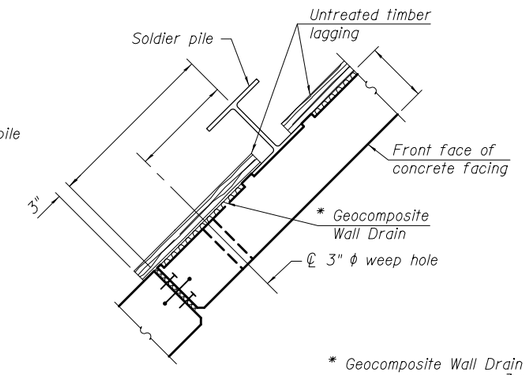

SECTION B-B

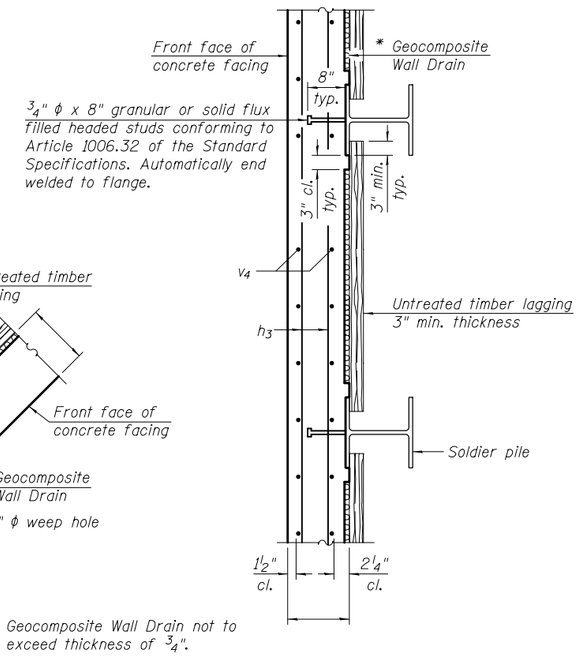

SECTION C-C

SOLDIER PILE WINGWALL CONSTRUCTION SEQUENCE

1. Construct concrete box culvert.
2. Drill soldier piles (may be completed prior to completing construction of box culvert).
3. Install timber lagging.
4. Place and compact backfill behind wingwall to top of timber lagging.
5. Install shear stud connectors.
6. Place reinforcement and form concrete wall face.
7. Cast concrete wingwall facing.
8. Remove temporary soldier pile and timber lagging outside limits of the wingwall.
9. Place remainder of backfill to proposed ground surface elevations on both sides of wall (backfill front side of wall as much as possible before backfilling is completed).

Notes:

The temporary soldier pile is required to facilitate backfilling of the wingwall prior to casting the concrete face. The temporary soldier pile shall conform to the construction requirements for permanent soldier piles except material for the temporary soldier pile may be new or used. After the concrete face has been allowed to cure, the temporary soldier pile shall be removed 2 ft below streambed along with the adjacent timber lagging. Cost of removing and disposing temporary soldier pile and timber lagging shall be included in the cost of Concrete Box Culverts.

In order to minimize excessive deflection and/or stresses in the soldier piles, compaction equipment used within 4 ft of the back face of the timber lagging shall be limited to lightweight mechanical tampers, rollers, or vibratory systems.

The Contractor is responsible for the design and performance of the timber lagging using no less than a 3 inch nominal rough-sawn thickness and timber with a minimum allowable bending stress of 1000 psi.

SOLDIER PILE DATA

Soldier Pile	Pile Size	Top Elevation	Bottom Elevation	Total Height (Ft.)	Number of Shear Studs

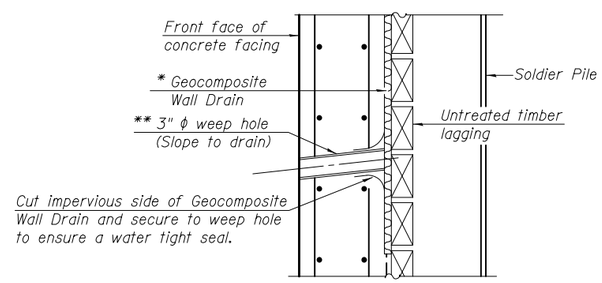

WEEP HOLE DRAIN DETAIL

** Cost of the weep hole drain and connection to the Geocomposite Wall Drain are included in the cost of Concrete Box Culverts.

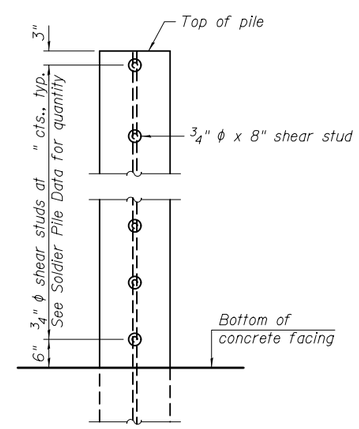

SHEAR STUD DETAIL

(Elevation of pile shown)

SP-ZS-DETAILS

10-15-2016

(Sheet 2 of 2)

FILE NAME =	USER NAME =	DESIGNED -	REVISED	STATE OF ILLINOIS DEPARTMENT OF TRANSPORTATION	CULVERT DETAILS STRUCTURE NO.	F.A. RTE.	SECTION	COUNTY	TOTAL SHEETS	SHEET NO.
		CHECKED -	REVISED							
	PLOT SCALE =	DRAWN -	REVISED					CONTRACT NO.		
	PLOT DATE =	CHECKED -	REVISED		SHEET NO. OF SHEETS		ILLINOIS	FED. AID PROJECT		

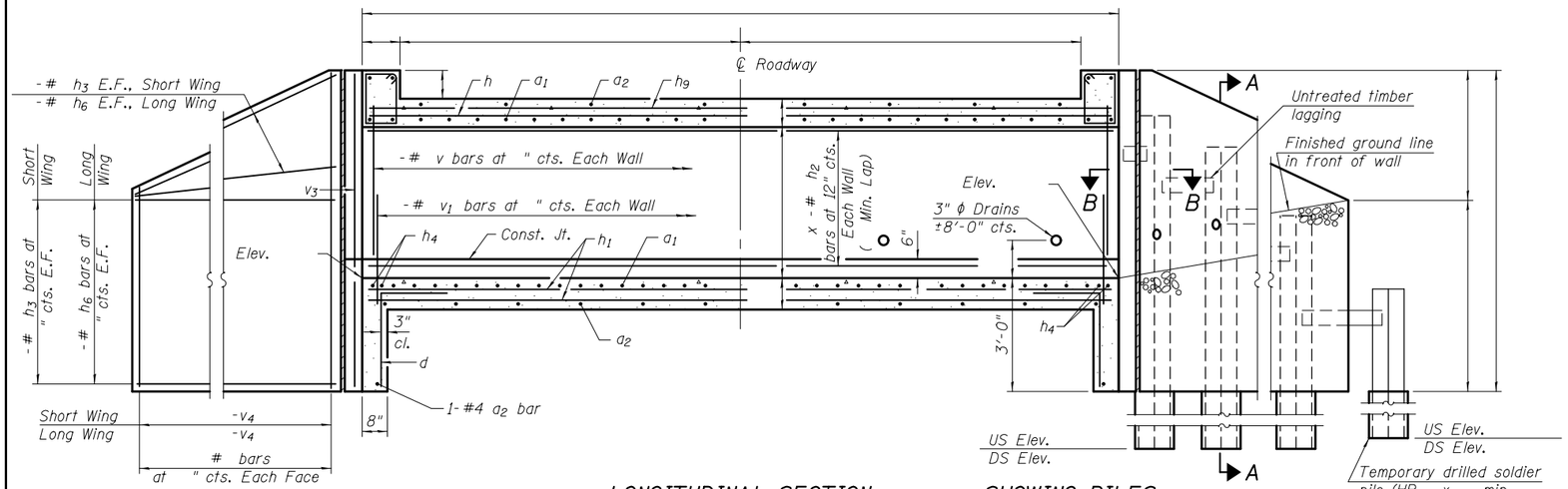

SHOWING WINGWALL REINF.

LONGITUDINAL SECTION

(Dimensions at Rt. L's to ℄ Roadway)

SHOWING PILES

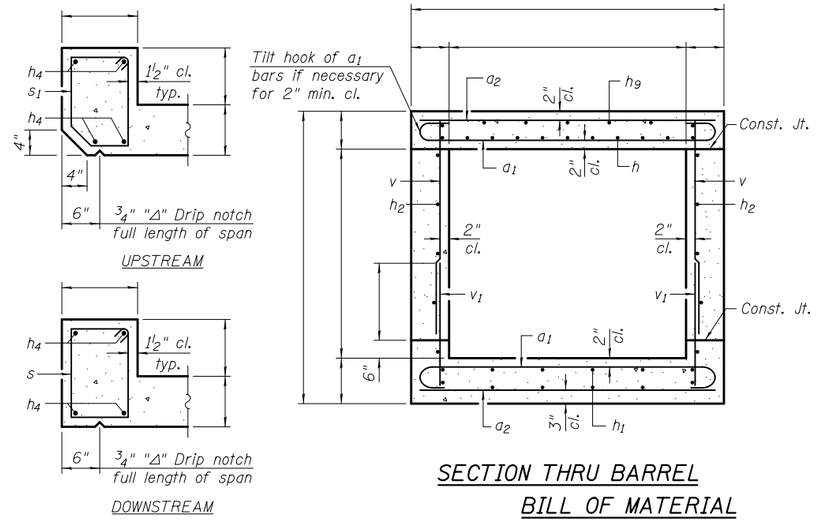

SECTION THRU HEADWALL

SECTION THRU BARREL

BILL OF MATERIAL

Bar	No.	Size	Length	Shape
a_1		#		
a_2		#		
d		#4	4'-5"	
h		#		
h_1		#		
h_2		#		
h_3		#		
h_4		#		
h_6		#		
h_9		#		
s		#		
s_1		#		
v		#		
v_1		#		
v_3		#		
v_4		#		
Concrete Box Culverts			Cu. Yd.	
Reinforcement Bars			Pound	
Furnishing Soldier Piles			Foot	
Drilling and Setting Soldier Piles (In soil)			Cu. Ft.	
Drilling and Setting Soldier Piles (In rock)			Cu. Ft.	
Untreated Timber Lagging			Sq. Ft.	
Geocomposite Wall Drain			Sq. Yd.	
Stud Shear Connectors			Each	

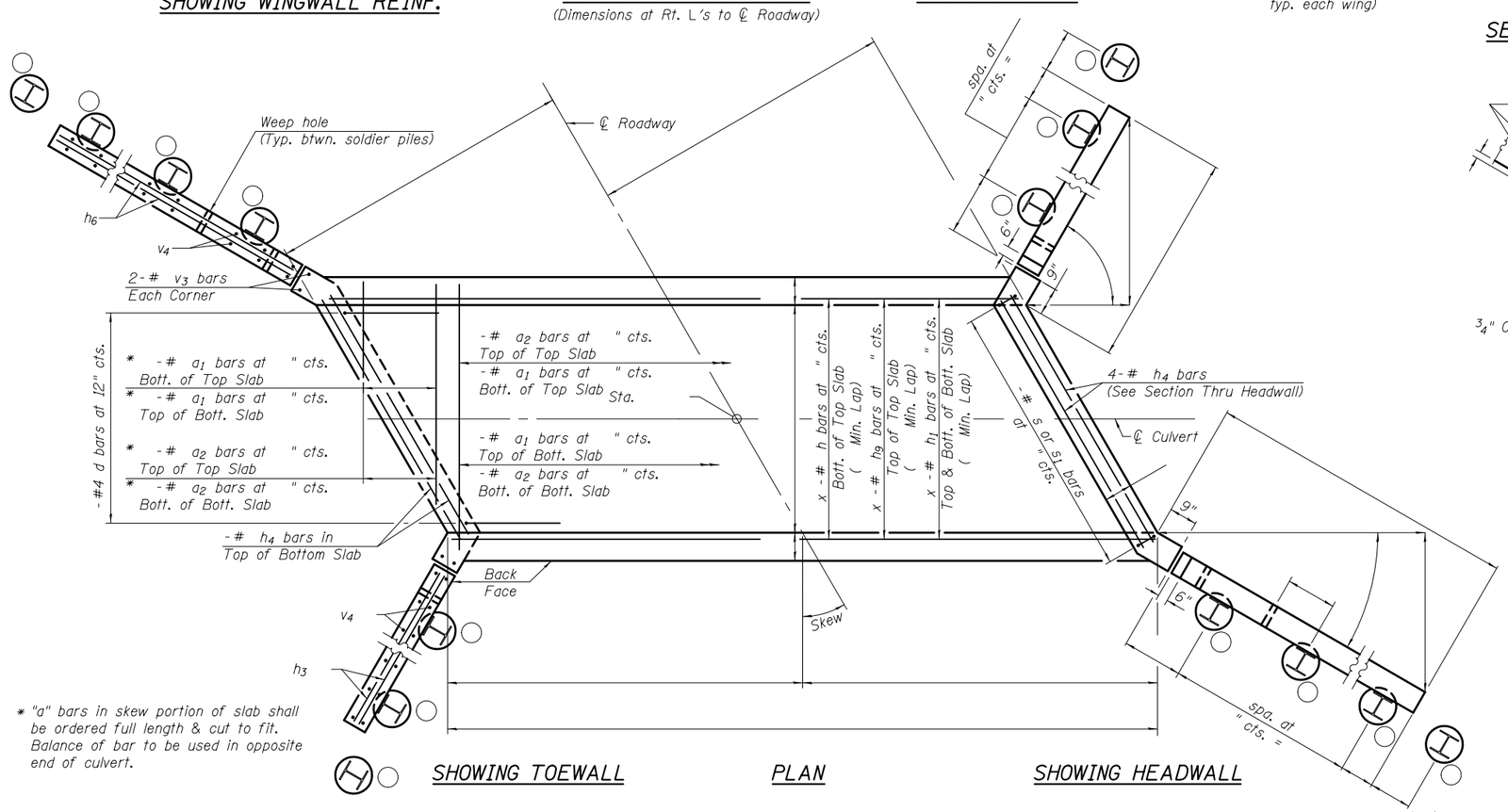

* "a" bars in skew portion of slab shall be ordered full length & cut to fit. Balance of bar to be used in opposite end of culvert.

SHOWING TOEWALL

PLAN

SHOWING HEADWALL

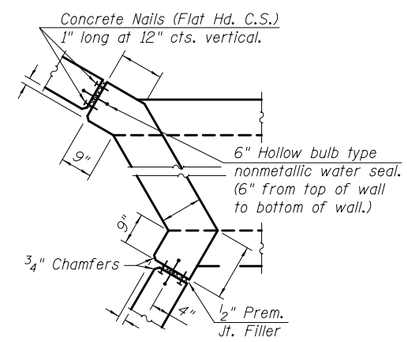

CORNER DETAIL

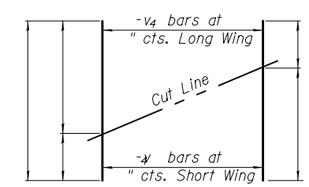

FIELD CUTTING DIAGRAM

Order bars shown full length. Cut as shown and use remainder of bars in opposite face.

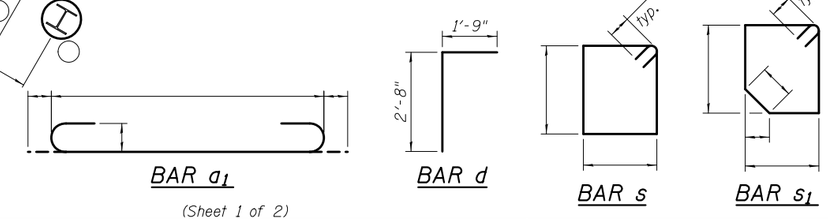

BAR a_1

BAR d

BAR s

BAR s_1

Notes:
Bars indicated thus 12 x 4-#5 etc. indicates 12 lines of bars with 4 lengths per line.
At the Contractor's option, a longer v_1 bar may be ordered to replace the v bar. No reduction in quantities shall be made for this substitution.
See sheet of for soldier pile wingwall details.

TSA-SB-SP-LS 10-15-2016

(Sheet 1 of 2)

FILE NAME =	USER NAME =	DESIGNED -	REVISED	STATE OF ILLINOIS DEPARTMENT OF TRANSPORTATION	CULVERT DETAILS STRUCTURE NO.	F.A. RTE.	SECTION	COUNTY	TOTAL SHEETS	SHEET NO.
		CHECKED -	REVISED							
	PLOT SCALE =	DRAWN -	REVISED					CONTRACT NO.		
	PLOT DATE =	CHECKED -	REVISED		SHEET NO. OF SHEETS		ILLINOIS	FED. AID PROJECT		

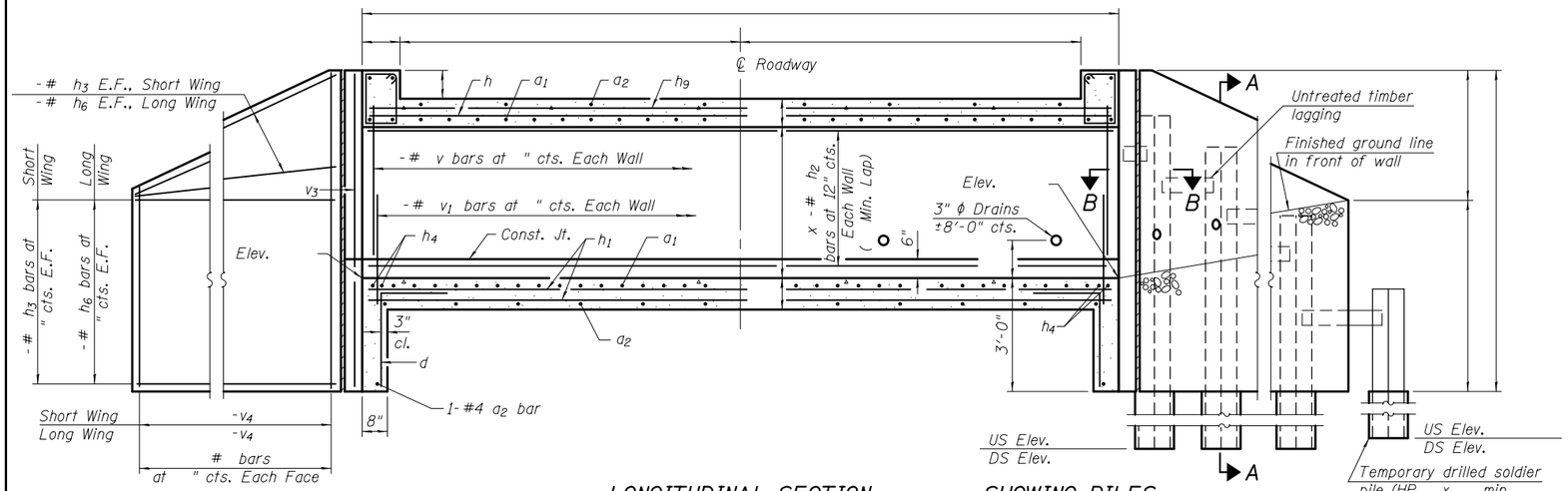

SHOWING WINGWALL REINF.

LONGITUDINAL SECTION

(Dimensions at Rt. L's to ℄ Roadway)

SHOWING PILES

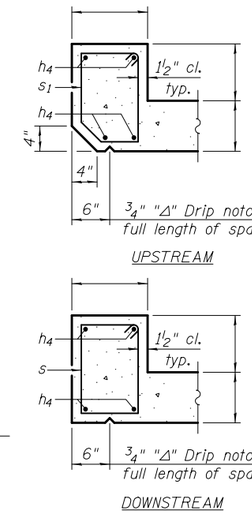

SECTION THRU HEADWALL

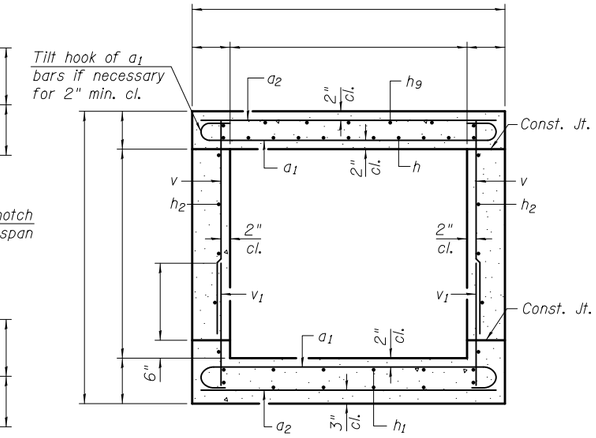

SECTION THRU BARREL

* "a" bars in skew portion of slab shall be ordered full length & cut to fit. Balance of bar to be used in opposite end of culvert.

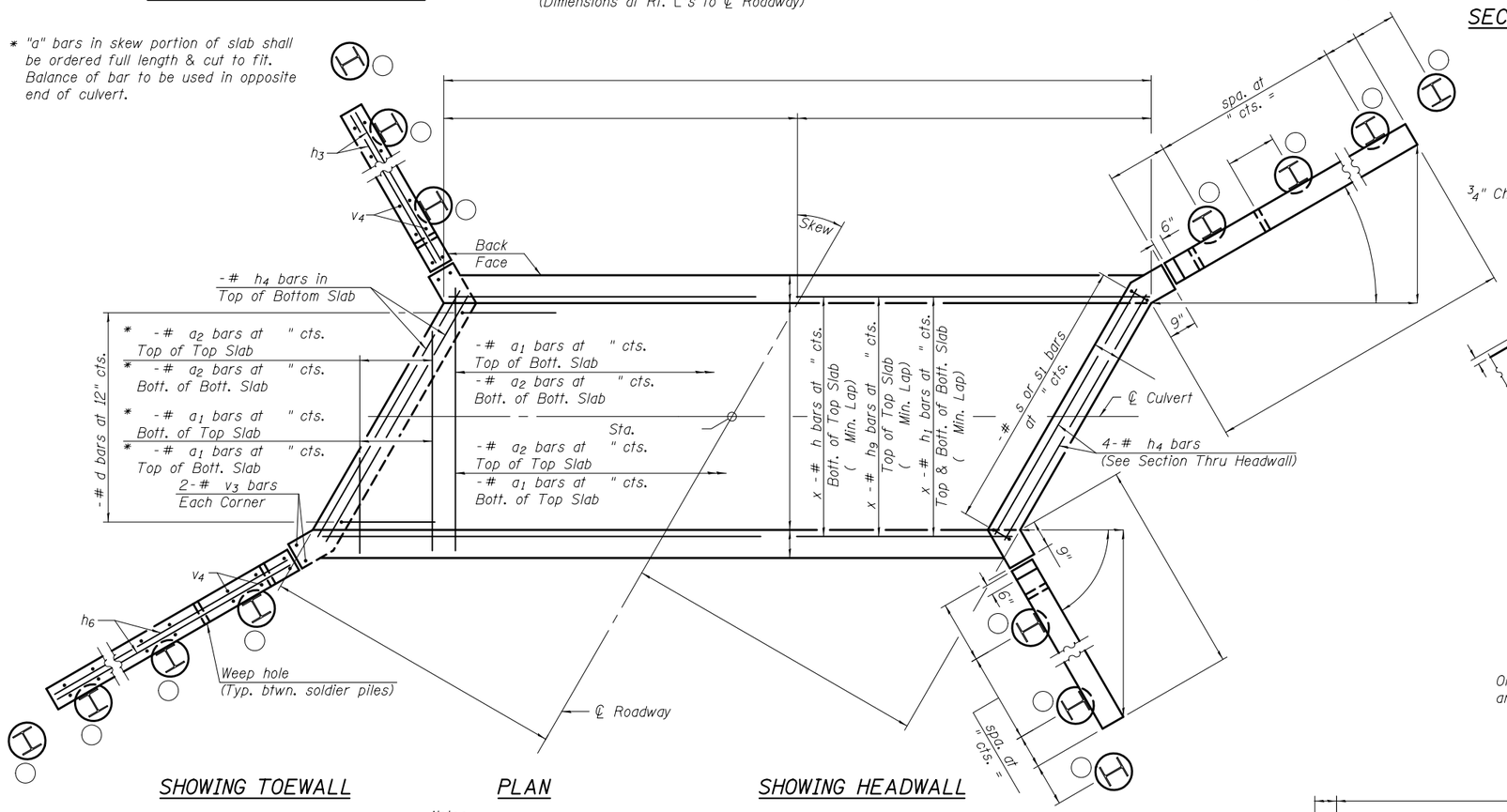

SHOWING TOEWALL

PLAN

SHOWING HEADWALL

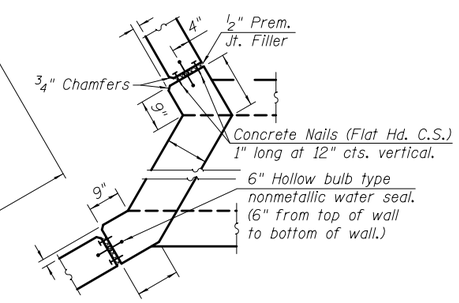

CORNER DETAIL

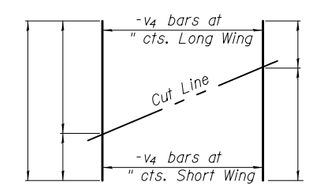

FIELD CUTTING DIAGRAM

Order bars shown full length. Cut as shown and use remainder of bars in opposite face.

BILL OF MATERIAL

Bar	No.	Size	Length	Shape
a_1		#		
a_2		#		
d		#4	4'-5"	
h		#		
h_1		#		
h_2		#		
h_3		#		
h_4		#		
h_6		#		
h_9		#		
s		#		
s_1		#		
v		#		
v_1		#		
v_3		#		
v_4		#		
Concrete Box Culverts		Cu. Yd.		
Reinforcement Bars		Pound		
Furnishing Soldier Piles		Foot		
Drilling and Setting Soldier Piles (In soil)		Cu. Ft.		
Drilling and Setting Soldier Piles (In rock)		Cu. Ft.		
Untreated Timber Lagging		Sq. Ft.		
Geocomposite Wall Drain		Sq. Yd.		
Stud Shear Connectors		Each		

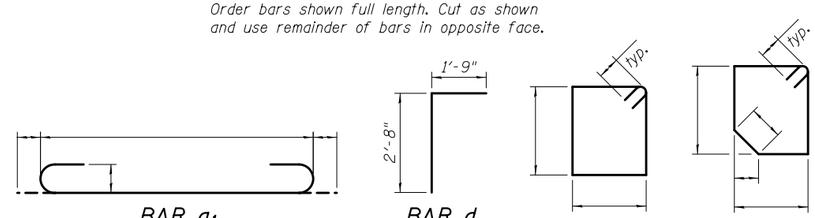

BAR a_1 BAR d BAR s BAR s_1

Notes:
Bars indicated thus 12 x 4-#5 etc. indicates 12 lines of bars with 4 lengths per line.
At the Contractor's option, a longer v_1 bar may be ordered to replace the v bar. No reduction in quantities shall be made for this substitution.
See sheet of for soldier pile wingwall details.

TSA-SB-SP-RS 10-15-2016

(Sheet 1 of 2)

FILE NAME =	USER NAME =	DESIGNED -	REVISED	STATE OF ILLINOIS DEPARTMENT OF TRANSPORTATION	SHEET NO. OF SHEETS	F.A. RTE.	SECTION	COUNTY	TOTAL SHEETS	SHEET NO.
		CHECKED -	REVISED							
	PLOT SCALE =	DRAWN -	REVISED					CONTRACT NO.		
	PLOT DATE =	CHECKED -	REVISED				ILLINOIS	FED. AID PROJECT		

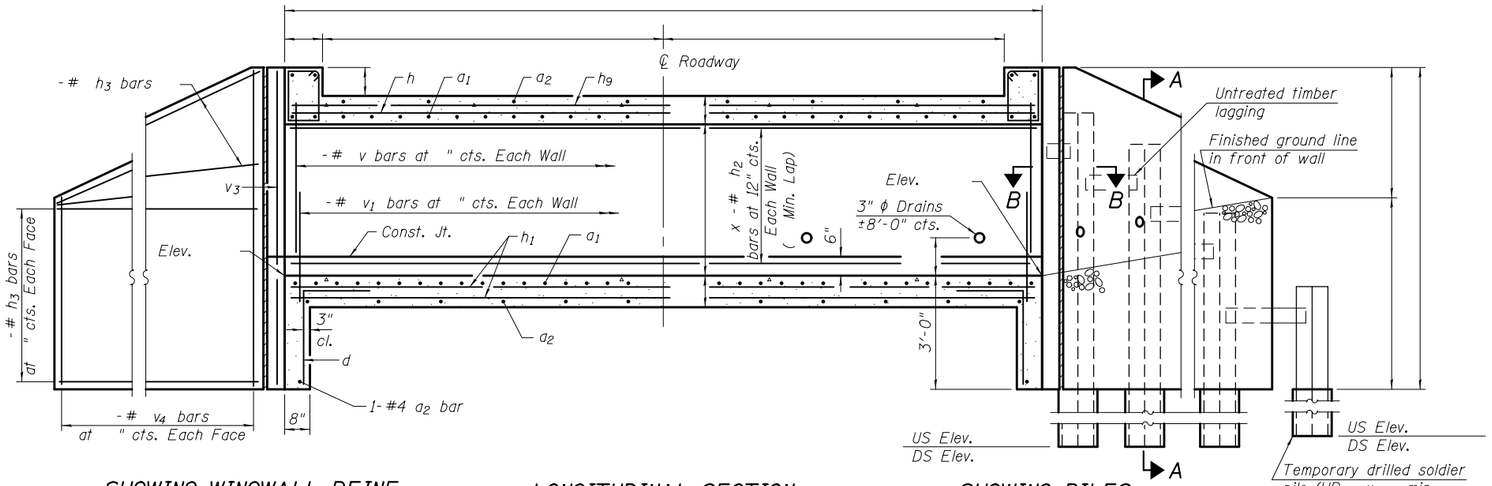

SHOWING WINGWALL REINF.

LONGITUDINAL SECTION

SHOWING PILES

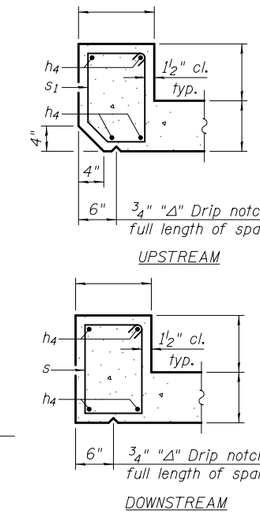

SECTION THRU HEADWALL

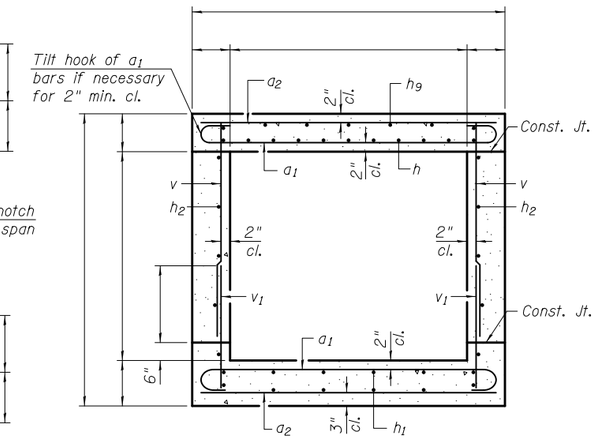

SECTION THRU BARREL

BILL OF MATERIAL

Bar	No.	Size	Length	Shape
a_1		#		
a_2		#		
d		#4	4'-5"	
h		#		
h_1		#		
h_2		#		
h_3		#		
h_4		#		
h_9		#		
s		#		
s_1		#		
v		#		
v_1		#		
v_3		#		
v_4		#		
Concrete Box Culverts			Cu. Yd.	
Reinforcement Bars			Pound	
Furnishing Soldier Piles			Foot	
Drilling and Setting Soldier Piles (In soil)			Cu. Ft.	
Drilling and Setting Soldier Piles (In rock)			Cu. Ft.	
Untreated Timber Lagging			Sq. Ft.	
Geocomposite Wall Drain			Sq. Yd.	
Stud Shear Connectors			Each	

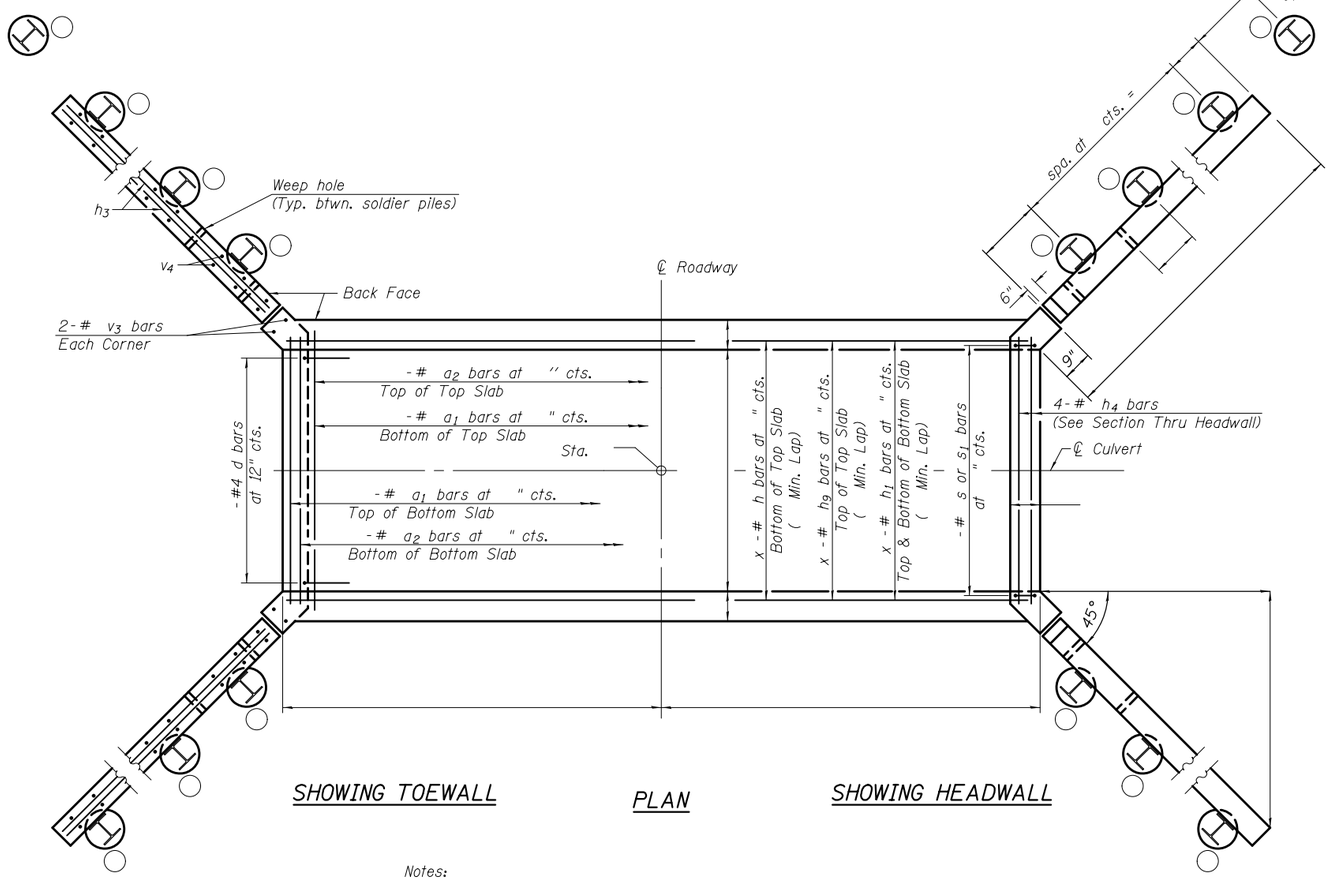

SHOWING TOEWALL

PLAN

SHOWING HEADWALL

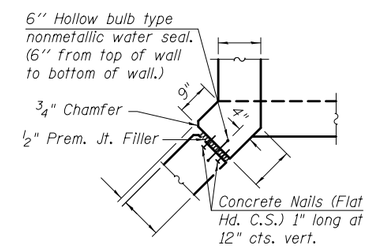

CORNER DETAIL

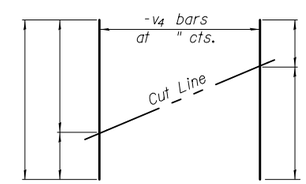

FIELD CUTTING DIAGRAM

Order bars shown full length. Cut as shown and use remainder of bars in opposite wingwall.

Notes:
Bars indicated thus 12 x 4-#5 etc. indicates 12 lines of bars with 4 lengths per line.
At the Contractor's option, a longer v_1 bar may be ordered to replace the v bar. No reduction in quantities shall be made for this substitution.
See sheet of for soldier pile wingwall details.

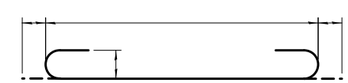

BAR a_1

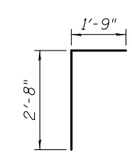

BAR d

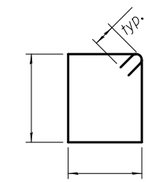

BAR s

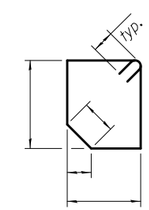

BAR s_1

TSA-SB-SP-ZS

10-15-2016

(Sheet 1 of 2)

FILE NAME =	USER NAME =	DESIGNED -	REVISED	STATE OF ILLINOIS DEPARTMENT OF TRANSPORTATION	CULVERT DETAILS STRUCTURE NO.	F.A. RTE.	SECTION	COUNTY	TOTAL SHEETS	SHEET NO.
		CHECKED -	REVISED							
	PLOT SCALE =	DRAWN -	REVISED					CONTRACT NO.		
	PLOT DATE =	CHECKED -	REVISED		SHEET NO. OF SHEETS		ILLINOIS FED. AID PROJECT			

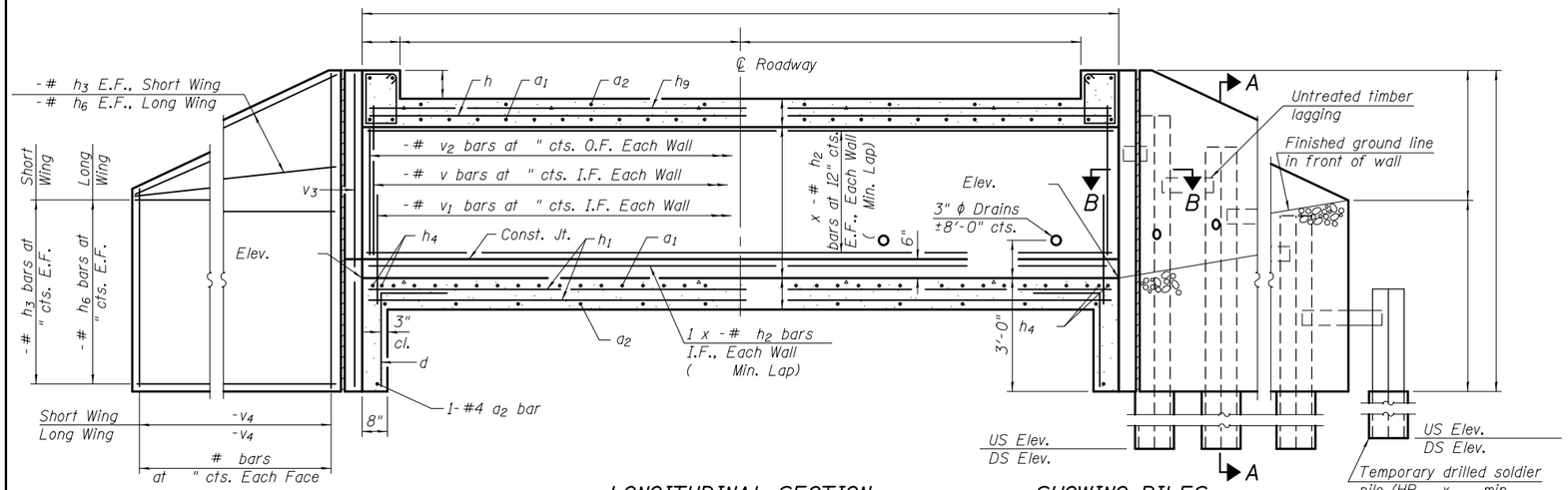

SHOWING WINGWALL REINF.

LONGITUDINAL SECTION

(Dimensions at Rt. L's to ℄ Roadway)

SHOWING PILES

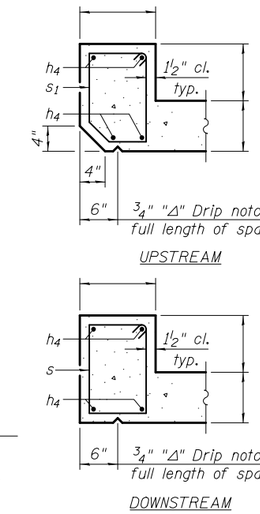

SECTION THRU HEADWALL

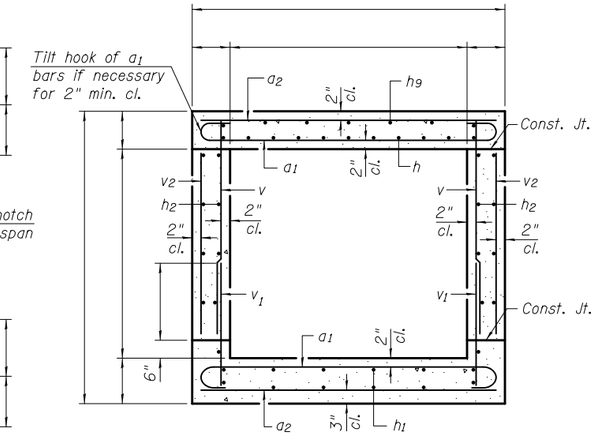

SECTION THRU BARREL

BILL OF MATERIAL

Bar	No.	Size	Length	Shape
a_1		#		
a_2		#		
d		#4	4'-5"	
h		#		
h_1		#		
h_2		#		
h_3		#		
h_4		#		
h_6		#		
h_9		#		
s		#		
s_1		#		
v		#		
v_1		#		
v_2		#		
v_3		#		
v_4		#		
Concrete Box Culverts		Cu. Yd.		
Reinforcement Bars		Pound		
Furnishing Soldier Piles		Foot		
Drilling and Setting Soldier Piles (In soil)		Cu. Ft.		
Drilling and Setting Soldier Piles (In rock)		Cu. Ft.		
Untreated Timber Lagging		Sq. Ft.		
Geocomposite Wall Drain		Sq. Yd.		
Stud Shear Connectors		Each		

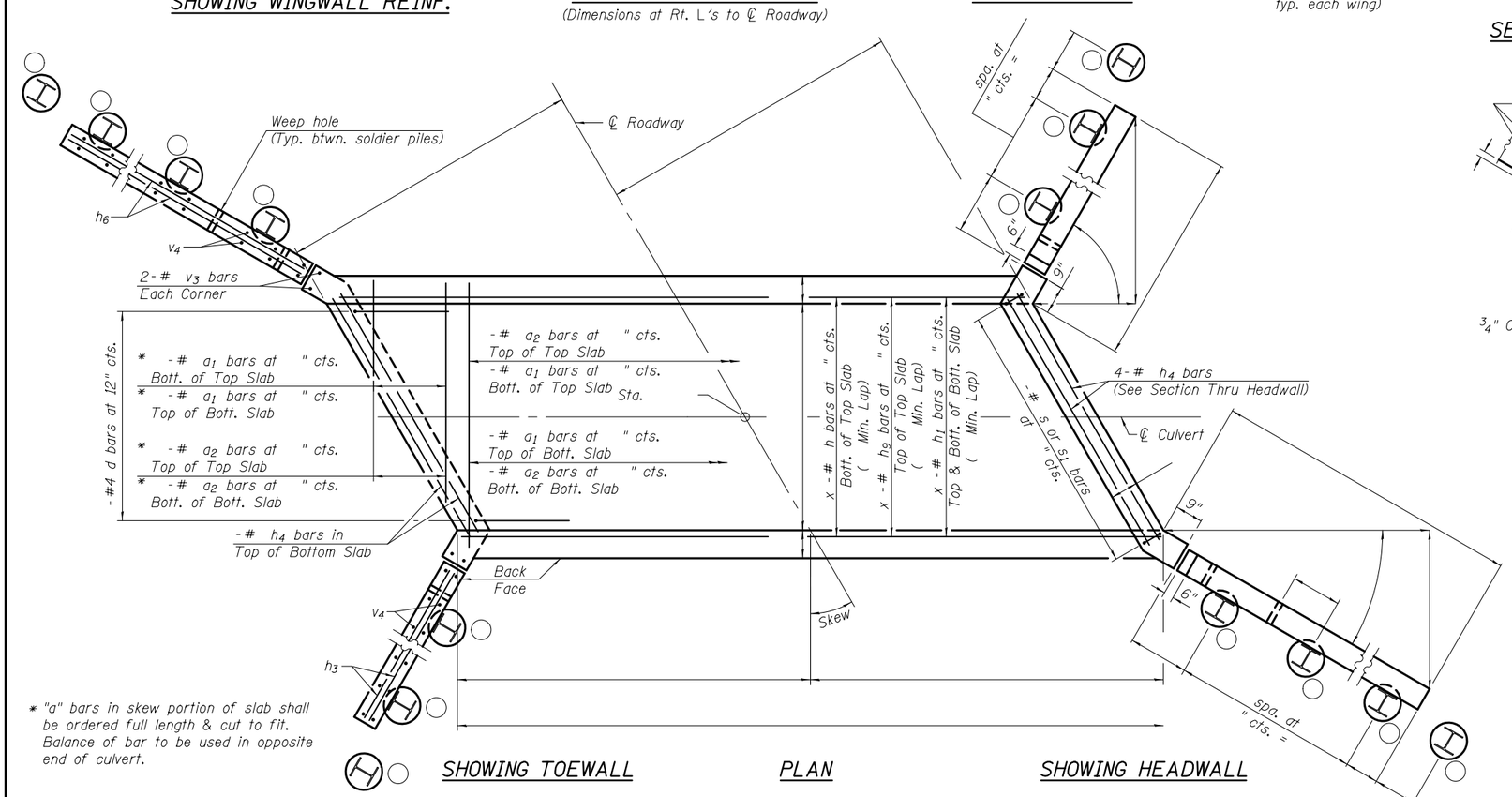

SHOWING TOEWALL

PLAN

SHOWING HEADWALL

* "a" bars in skew portion of slab shall be ordered full length & cut to fit. Balance of bar to be used in opposite end of culvert.

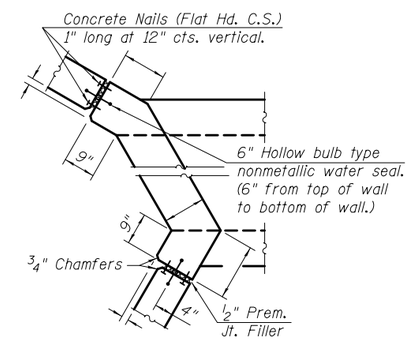

CORNER DETAIL

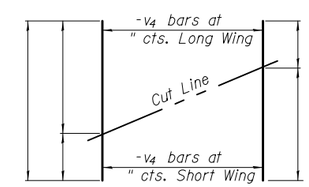

FIELD CUTTING DIAGRAM

Order bars shown full length. Cut as shown and use remainder of bars in opposite face.

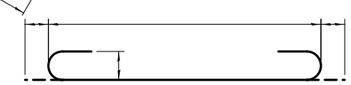

BAR a_1

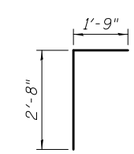

BAR d

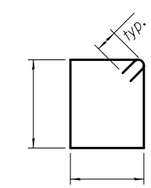

BAR s

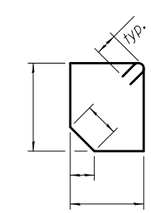

BAR s_1

Notes:
Bars indicated thus 12 x 4- #5 etc. indicates 12 lines of bars with 4 lengths per line.
At the Contractor's option, a longer v_1 bar may be ordered to replace the v bar. No reduction in quantities shall be made for this substitution.
See sheet of for soldier pile wingwall details.

TSA-SC-SP-LS 10-15-2016

(Sheet 1 of 2)

FILE NAME =	USER NAME =	DESIGNED -	REVISED	STATE OF ILLINOIS DEPARTMENT OF TRANSPORTATION	CULVERT DETAILS STRUCTURE NO.	F.A. RTE.	SECTION	COUNTY	TOTAL SHEETS	SHEET NO.
		CHECKED -	REVISED							
	PLOT SCALE =	DRAWN -	REVISED					CONTRACT NO.		
	PLOT DATE =	CHECKED -	REVISED		SHEET NO. OF SHEETS		ILLINOIS	FED. AID PROJECT		

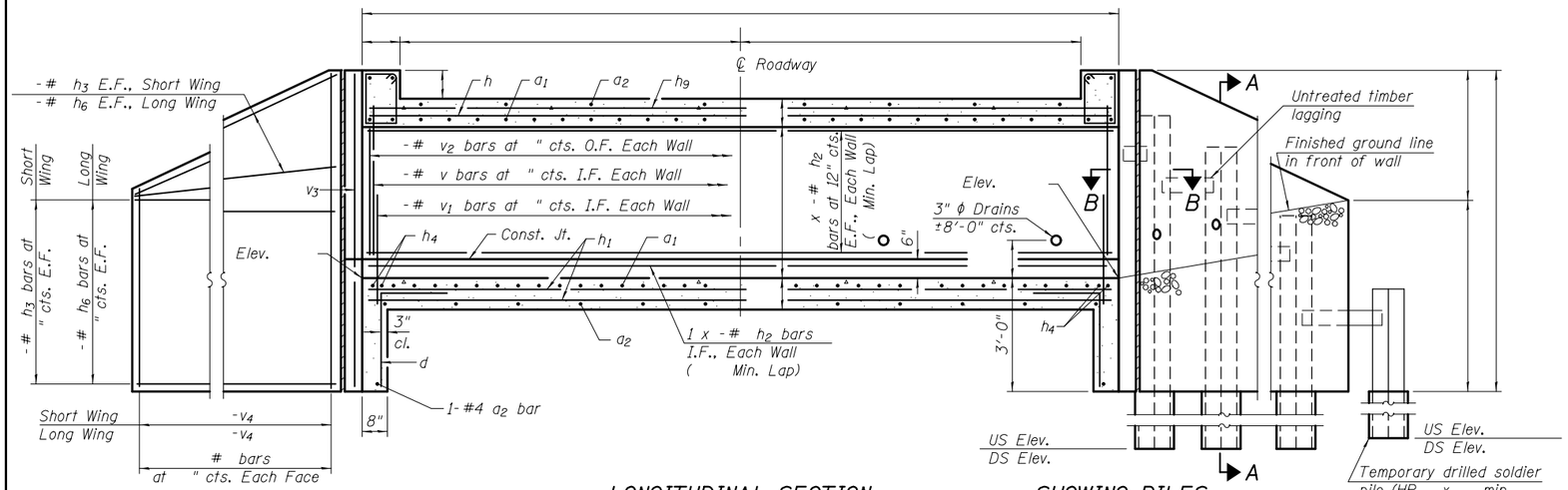

SHOWING WINGWALL REINF.

LONGITUDINAL SECTION

(Dimensions at Rt. L's to ℄ Roadway)

SHOWING PILES

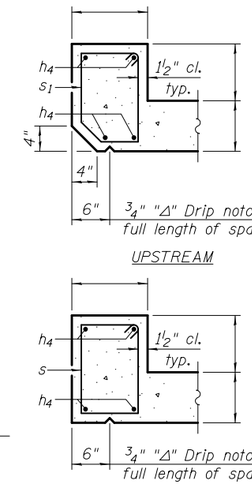

SECTION THRU HEADWALL

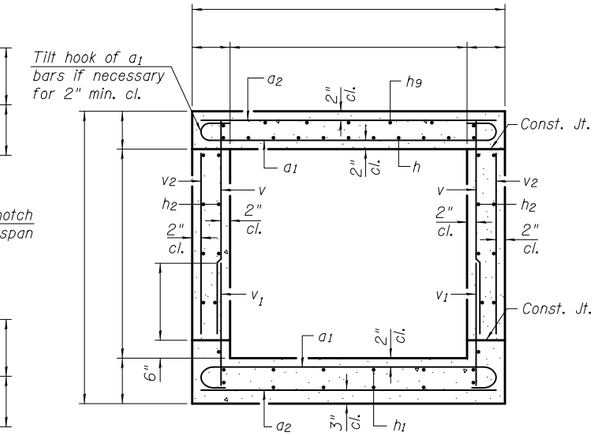

SECTION THRU BARREL

BILL OF MATERIAL

Bar	No.	Size	Length	Shape
a_1		#		
a_2		#		
d		#4	4'-5"	
h		#		
h_1		#		
h_2		#		
h_3		#		
h_4		#		
h_6		#		
h_9		#		
s		#		
s_1		#		
v		#		
v_1		#		
v_2		#		
v_3		#		
v_4		#		
Concrete Box Culverts			Cu. Yd.	
Reinforcement Bars			Pound	
Furnishing Soldier Piles			Foot	
Drilling and Setting Soldier Piles (In soil)			Cu. Ft.	
Drilling and Setting Soldier Piles (In rock)			Cu. Ft.	
Untreated Timber Lagging			Sq. Ft.	
Geocomposite Wall Drain			Sq. Yd.	
Stud Shear Connectors			Each	

* "a" bars in skew portion of slab shall be ordered full length & cut to fit. Balance of bar to be used in opposite end of culvert.

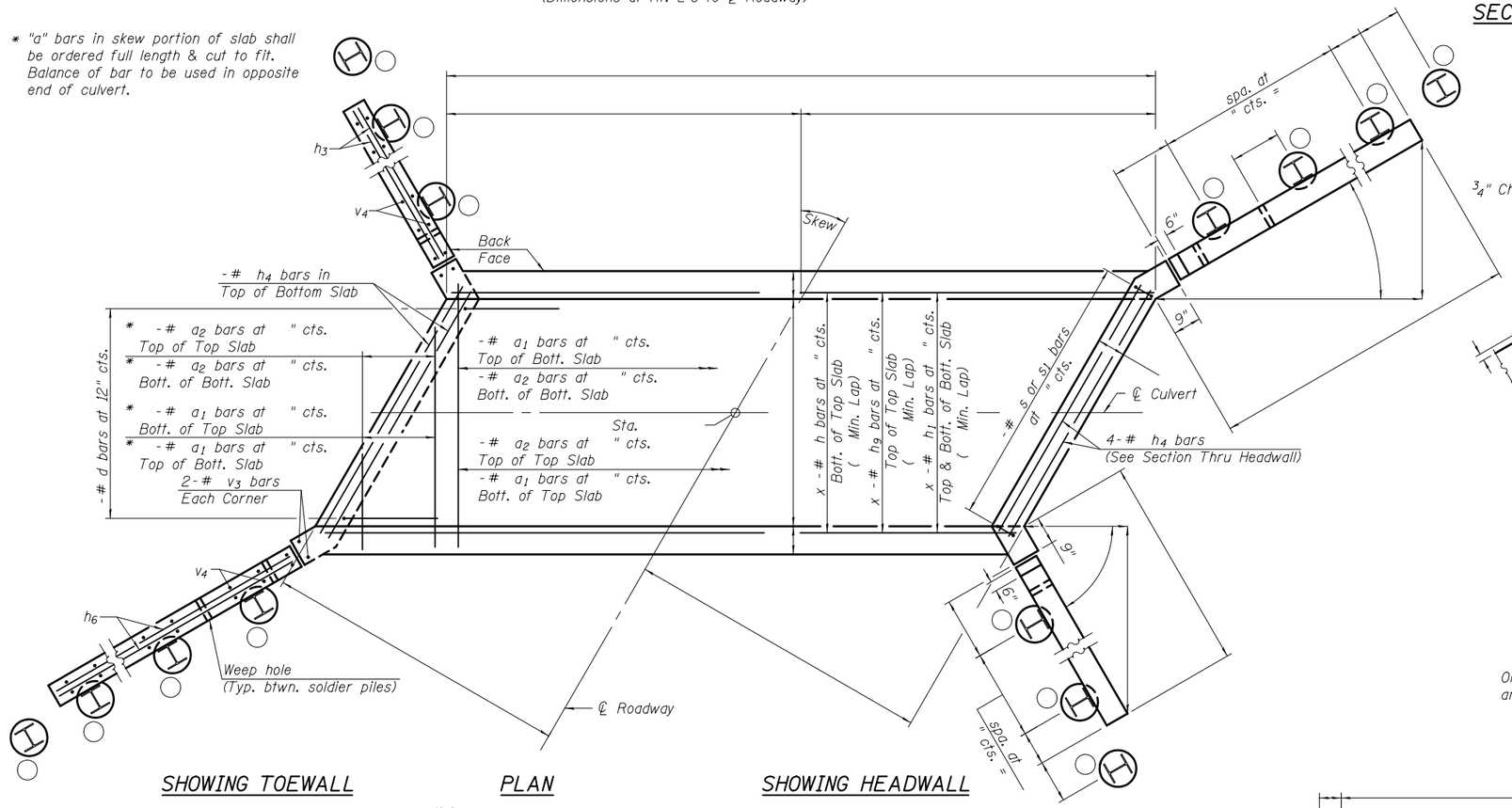

SHOWING TOEWALL

PLAN

SHOWING HEADWALL

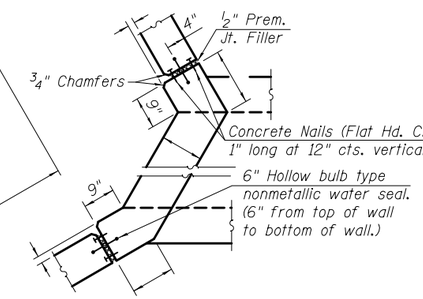

CORNER DETAIL

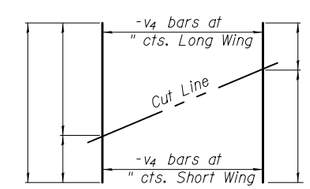

FIELD CUTTING DIAGRAM

Order bars shown full length. Cut as shown and use remainder of bars in opposite face.

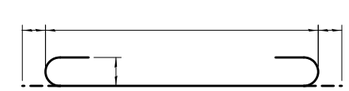

BAR a_1

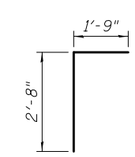

BAR d

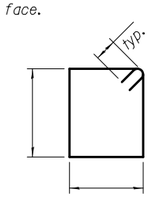

BAR s

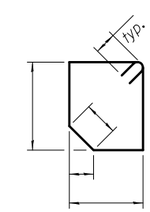

BAR s_1

Notes:

Bars indicated thus 12 x 4-#5 etc. indicates 12 lines of bars with 4 lengths per line.

At the Contractor's option, a longer v_1 bar may be ordered to replace the v bar. No reduction in quantities shall be made for this substitution.

See sheet of for soldier pile wingwall details.

TSA-SC-SP-RS

10-15-2016

(Sheet 1 of 2)

FILE NAME =	USER NAME =	DESIGNED -	REVISED	STATE OF ILLINOIS DEPARTMENT OF TRANSPORTATION	CULVERT DETAILS STRUCTURE NO.	F.A. RTE.	SECTION	COUNTY	TOTAL SHEETS	SHEET NO.
		CHECKED -	REVISED							
	PLOT SCALE =	DRAWN -	REVISED					CONTRACT NO.		
	PLOT DATE =	CHECKED -	REVISED		SHEET NO. OF SHEETS		ILLINOIS	FED. AID PROJECT		

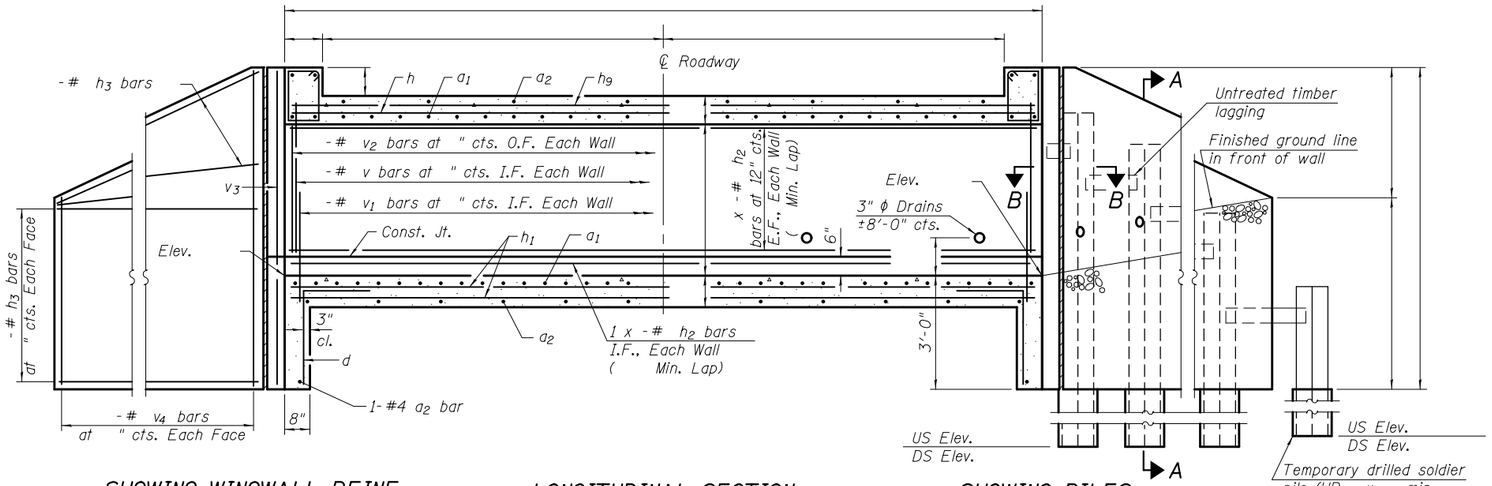

SHOWING WINGWALL REINF.

LONGITUDINAL SECTION

SHOWING PILES

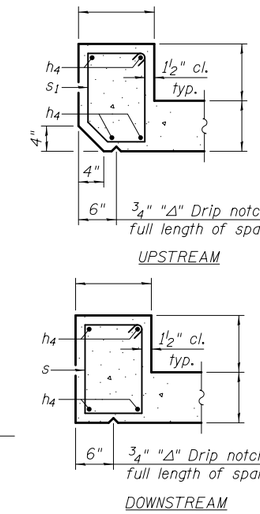

SECTION THRU HEADWALL

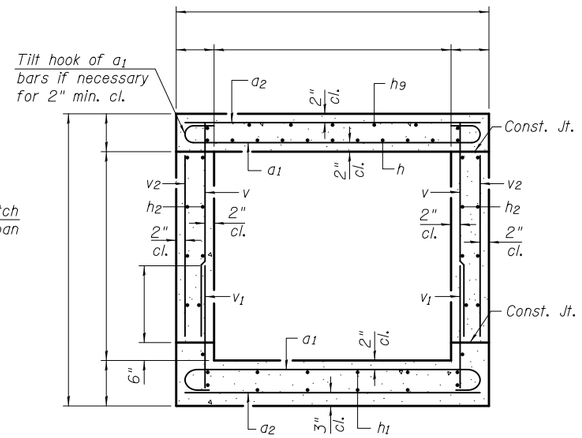

SECTION THRU BARREL

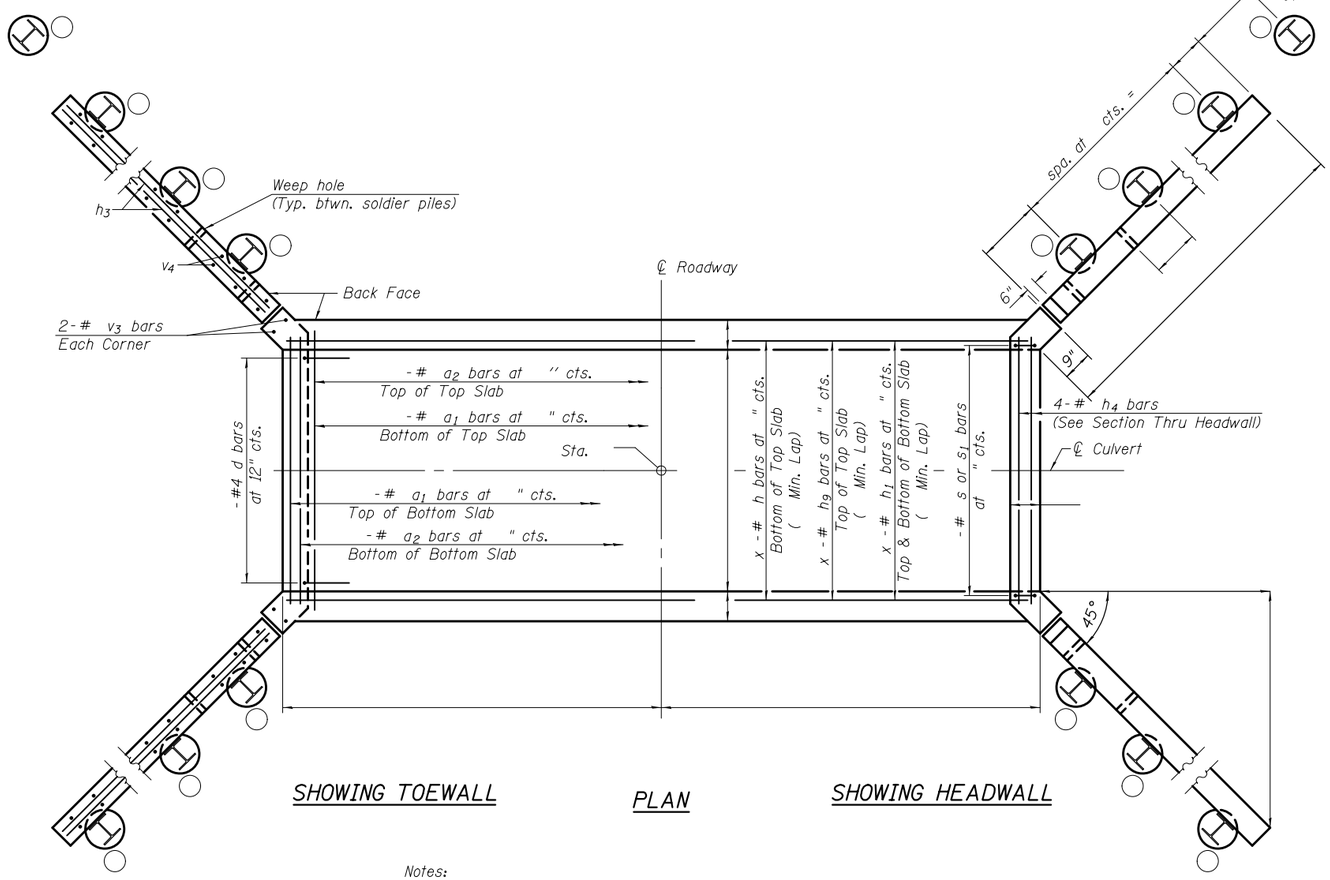

SHOWING TOEWALL

PLAN

SHOWING HEADWALL

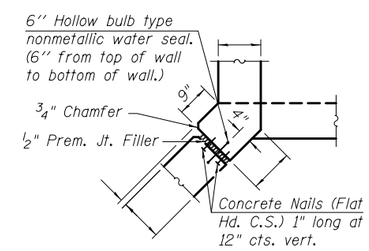

CORNER DETAIL

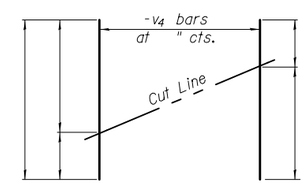

FIELD CUTTING DIAGRAM

Order bars shown full length. Cut as shown and use remainder of bars in opposite wingwall.

BILL OF MATERIAL

Bar	No.	Size	Length	Shape
a1		#		
a2		#		
d		#4	4'-5"	
h		#		
h1		#		
h2		#		
h3		#		
h4		#		
h9		#		
s		#		
s1		#		
v		#		
v1		#		
v2		#		
v3		#		
v4		#		
Concrete Box Culverts			Cu. Yd.	
Reinforcement Bars			Pound	
Furnishing Soldier Piles			Foot	
Drilling and Setting Soldier Piles (In soil)			Cu. Ft.	
Drilling and Setting Soldier Piles (In rock)			Cu. Ft.	
Untreated Timber Lagging			Sq. Ft.	
Geocomposite Wall Drain			Sq. Yd.	
Stud Shear Connectors			Each	

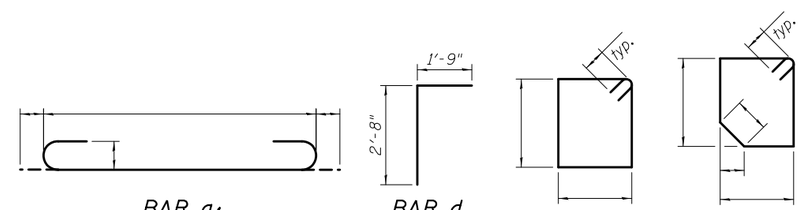

BAR a1 BAR d BAR s BAR s1

(Sheet 1 of 2)

Notes:
Bars indicated thus 12 x 4-#5 etc. indicates 12 lines of bars with 4 lengths per line.
At the Contractor's option, a longer v1 bar may be ordered to replace the v bar. No reduction in quantities shall be made for this substitution.
See sheet of for soldier pile wingwall details.

TSA-SC-SP-ZS 10-15-2016

FILE NAME =	USER NAME =	DESIGNED -	REVISED	STATE OF ILLINOIS DEPARTMENT OF TRANSPORTATION	CULVERT DETAILS STRUCTURE NO.	F.A. RTE.	SECTION	COUNTY	TOTAL SHEETS	SHEET NO.
		CHECKED -	REVISED							
	PLOT SCALE =	DRAWN -	REVISED					CONTRACT NO.		
	PLOT DATE =	CHECKED -	REVISED		SHEET NO. OF SHEETS		ILLINOIS FED. AID PROJECT			

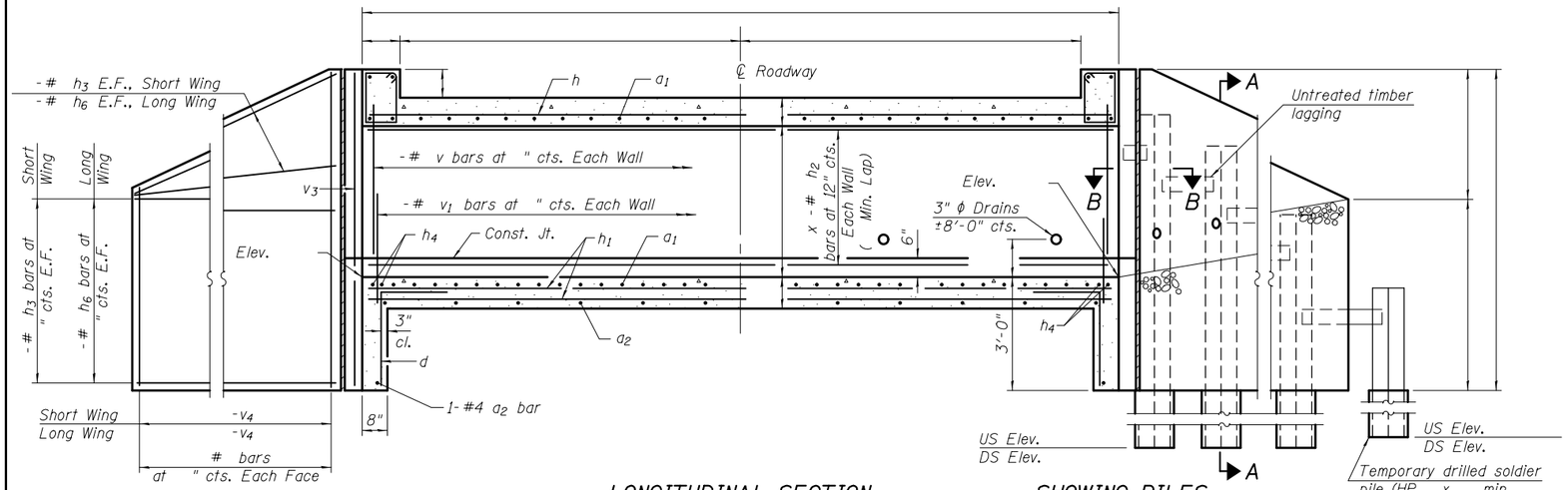

SHOWING WINGWALL REINF.

LONGITUDINAL SECTION

(Dimensions at Rt. L's to ℄ Roadway)

SHOWING PILES

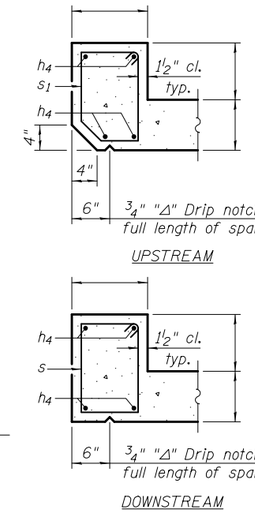

SECTION THRU HEADWALL

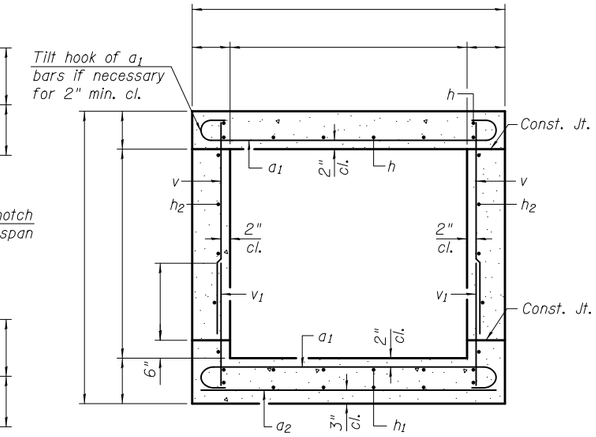

SECTION THRU BARREL

BILL OF MATERIAL

Bar	No.	Size	Length	Shape
a_1		#		
a_2		#		
d		#4	4'-5"	
h		#		
h_1		#		
h_2		#		
h_3		#		
h_4		#		
h_6		#		
s		#		
s_1		#		
v		#		
v_1		#		
v_3		#		
v_4		#		
Concrete Box Culverts		Cu. Yd.		
Reinforcement Bars		Pound		
Furnishing Soldier Piles		Foot		
Drilling and Setting Soldier Piles (In soil)		Cu. Ft.		
Drilling and Setting Soldier Piles (In rock)		Cu. Ft.		
Untreated Timber Lagging		Sq. Ft.		
Geocomposite Wall Drain		Sq. Yd.		
Stud Shear Connectors		Each		

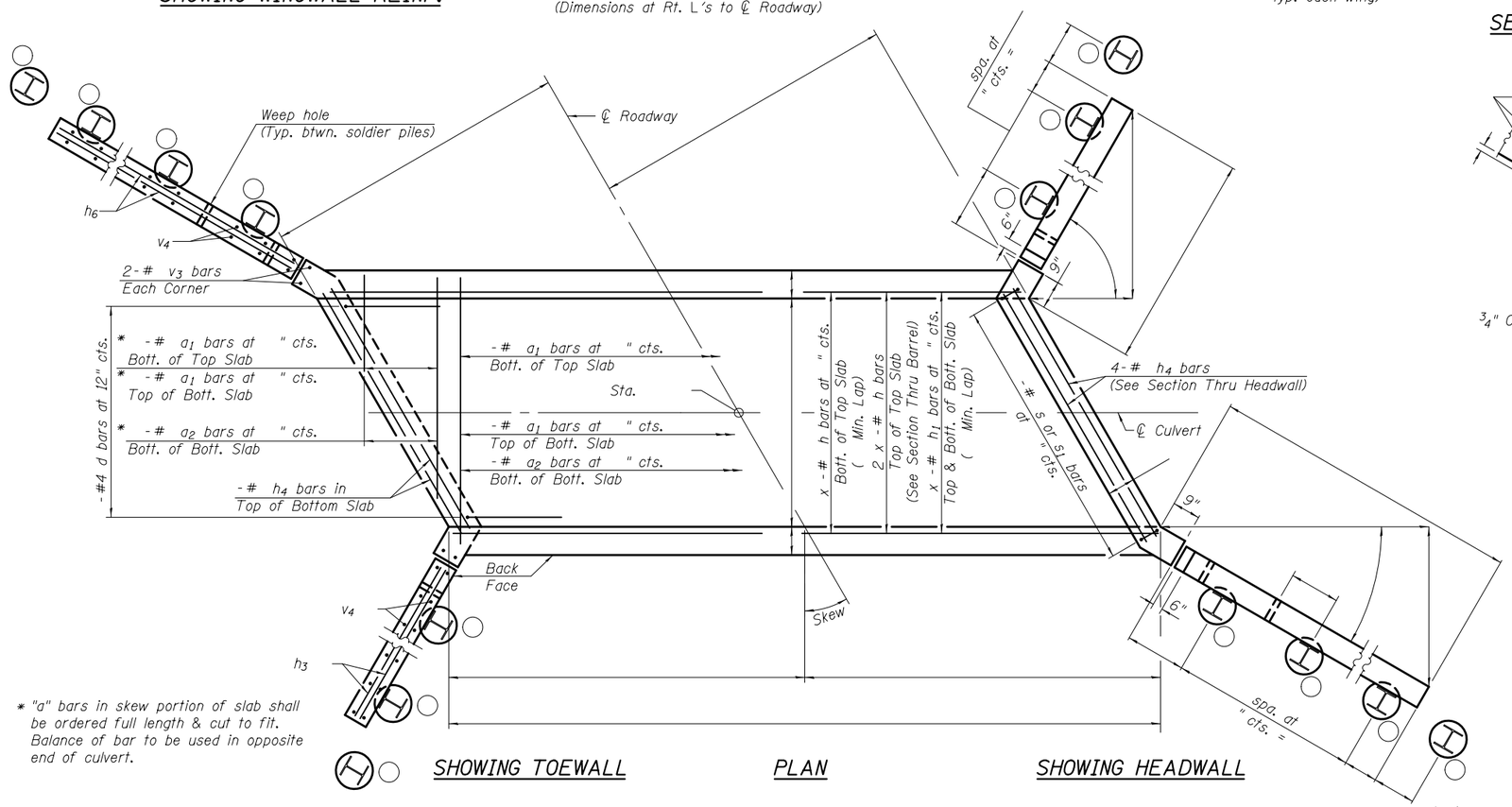

* "a" bars in skew portion of slab shall be ordered full length & cut to fit. Balance of bar to be used in opposite end of culvert.

SHOWING TOEWALL

PLAN

SHOWING HEADWALL

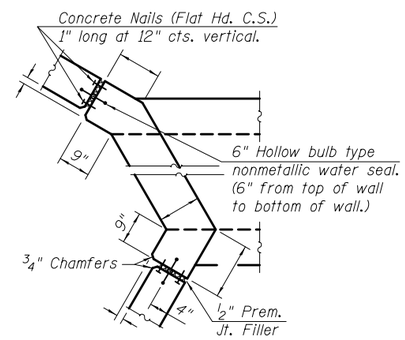

CORNER DETAIL

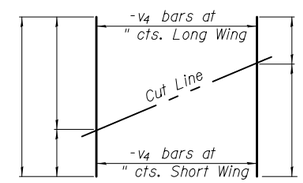

FIELD CUTTING DIAGRAM

Order bars shown full length. Cut as shown and use remainder of bars in opposite face.

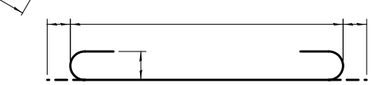

BAR a_1

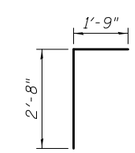

BAR d

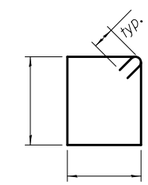

BAR s

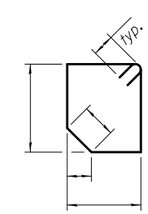

BAR s_1

Notes:

Bars indicated thus 12 x 4-#5 etc. indicates 12 lines of bars with 4 lengths per line.

At the Contractor's option, a longer v_1 bar may be ordered to replace the v bar. No reduction in quantities shall be made for this substitution.

See sheet of for soldier pile wingwall details.

(Sheet 1 of 2)

TSB-SB-SP-LS

10-15-2016

FILE NAME =	USER NAME =	DESIGNED -	REVISED	STATE OF ILLINOIS DEPARTMENT OF TRANSPORTATION	CULVERT DETAILS STRUCTURE NO.	F.A. RTE.	SECTION	COUNTY	TOTAL SHEETS / SHEET NO.
		CHECKED -	REVISED						
	PLOT SCALE =	DRAWN -	REVISED					CONTRACT NO.	
	PLOT DATE =	CHECKED -	REVISED		SHEET NO. OF SHEETS		ILLINOIS	FED. AID PROJECT	

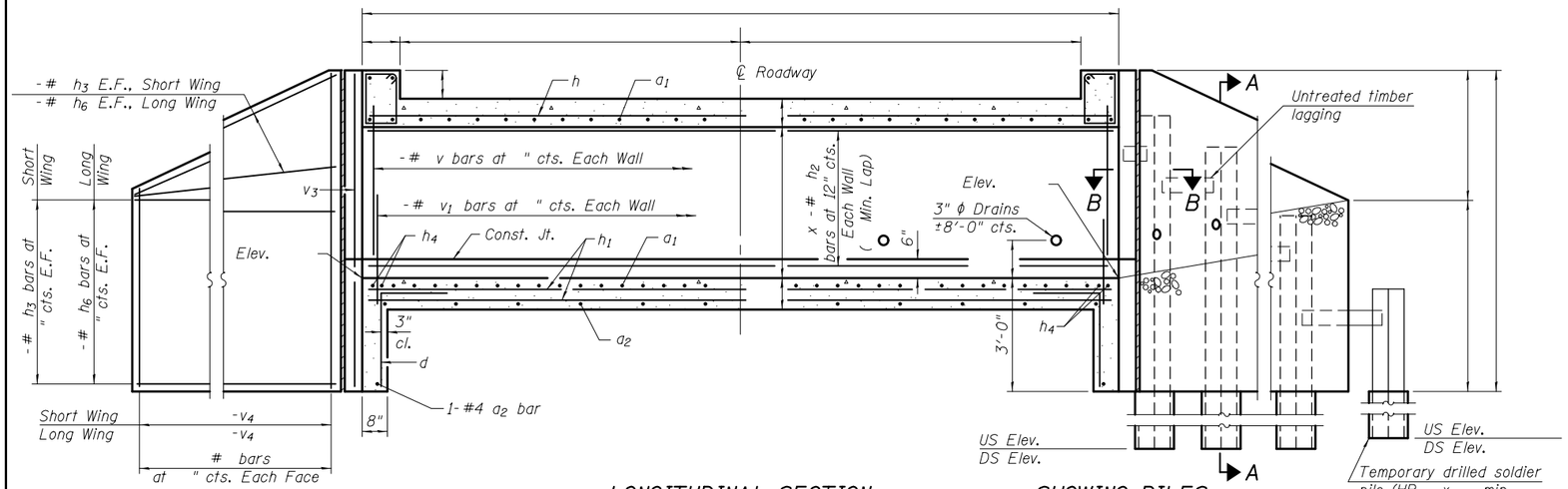

SHOWING WINGWALL REINF.

LONGITUDINAL SECTION

(Dimensions at Rt. L's to ℄ Roadway)

SHOWING PILES

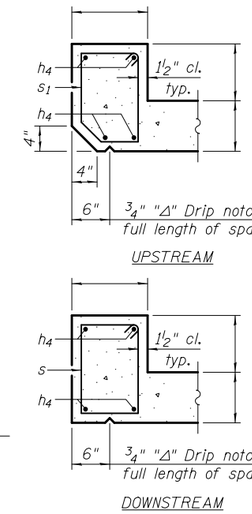

SECTION THRU HEADWALL

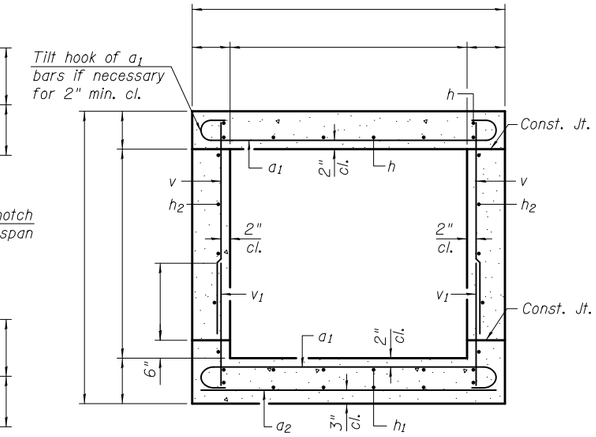

SECTION THRU BARREL

* "a" bars in skew portion of slab shall be ordered full length & cut to fit. Balance of bar to be used in opposite end of culvert.

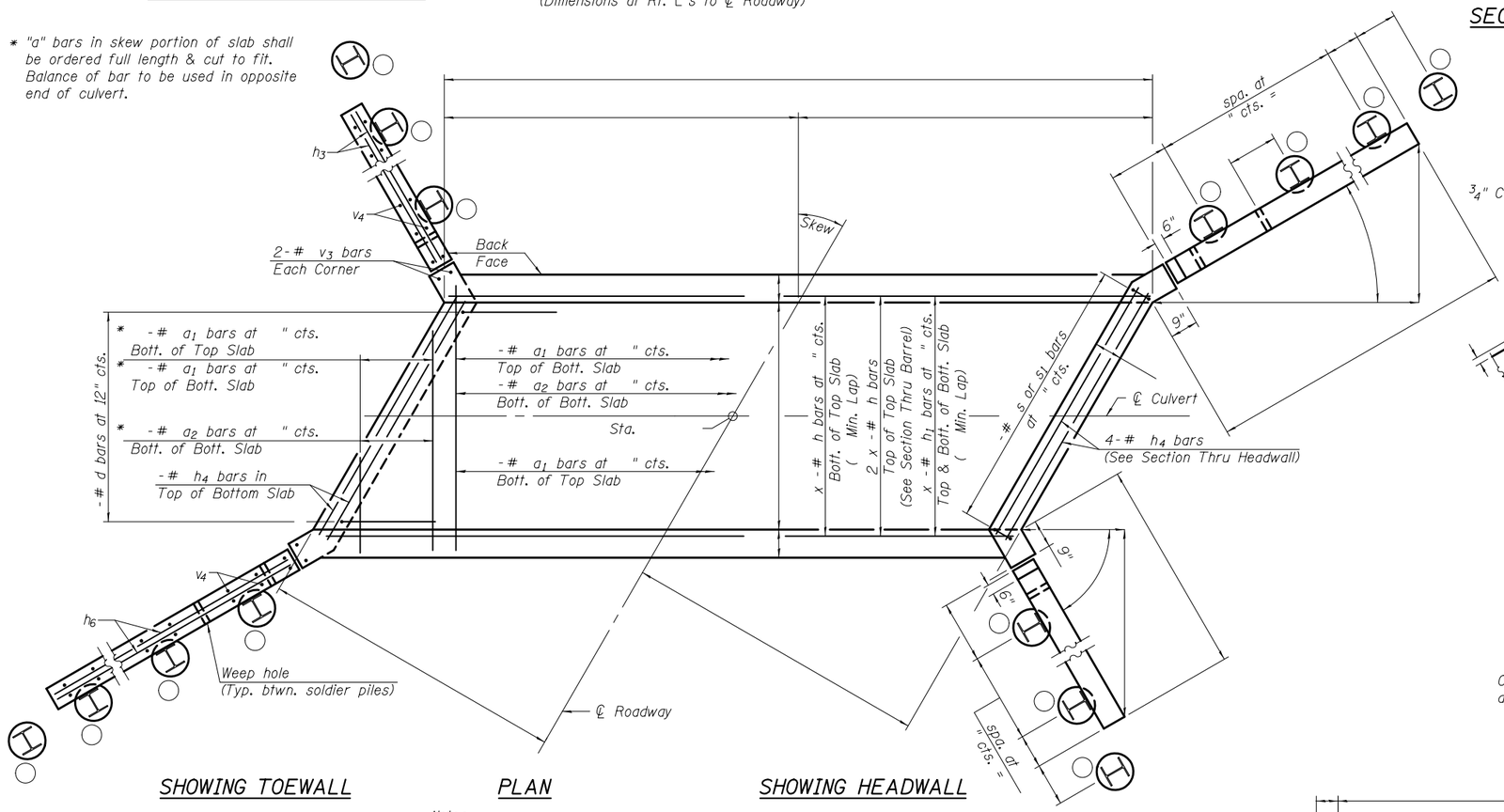

SHOWING TOEWALL

PLAN

SHOWING HEADWALL

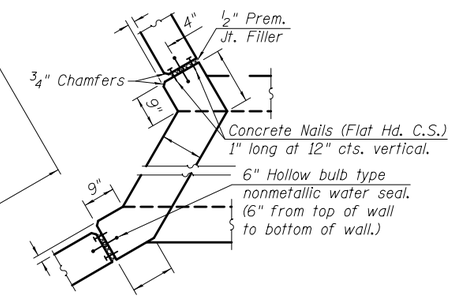

CORNER DETAIL

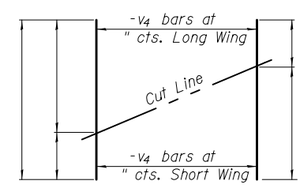

FIELD CUTTING DIAGRAM

Order bars shown full length. Cut as shown and use remainder of bars in opposite face.

BILL OF MATERIAL

Bar	No.	Size	Length	Shape
a_1		#		
a_2		#		
d		#4	4'-5"	
h		#		
h_1		#		
h_2		#		
h_3		#		
h_4		#		
h_6		#		
s		#		
s_1		#		
v		#		
v_1		#		
v_3		#		
v_4		#		
Concrete Box Culverts		Cu. Yd.		
Reinforcement Bars		Pound		
Furnishing Soldier Piles		Foot		
Drilling and Setting Soldier Piles (In soil)		Cu. Ft.		
Drilling and Setting Soldier Piles (In rock)		Cu. Ft.		
Untreated Timber Lagging		Sq. Ft.		
Geocomposite Wall Drain		Sq. Yd.		
Stud Shear Connectors		Each		

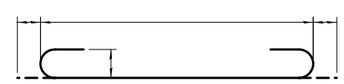

BAR a_1

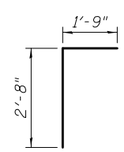

BAR d

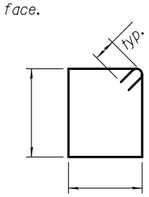

BAR s

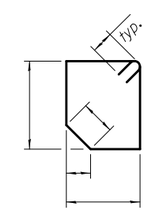

BAR s_1

Notes:

Bars indicated thus 12 x 4-#5 etc. indicates 12 lines of bars with 4 lengths per line.

At the Contractor's option, a longer v_1 bar may be ordered to replace the v bar. No reduction in quantities shall be made for this substitution.

See sheet of for soldier pile wingwall details.

TSB-SB-SP-RS 10-15-2016

(Sheet 1 of 2)

FILE NAME =	USER NAME =	DESIGNED -	REVISED	STATE OF ILLINOIS DEPARTMENT OF TRANSPORTATION	CULVERT DETAILS STRUCTURE NO.	F.A. RTE.	SECTION	COUNTY	TOTAL SHEETS	SHEET NO.
		CHECKED -	REVISED							
	PLOT SCALE =	DRAWN -	REVISED					CONTRACT NO.		
	PLOT DATE =	CHECKED -	REVISED		SHEET NO. OF SHEETS		ILLINOIS	FED. AID PROJECT		

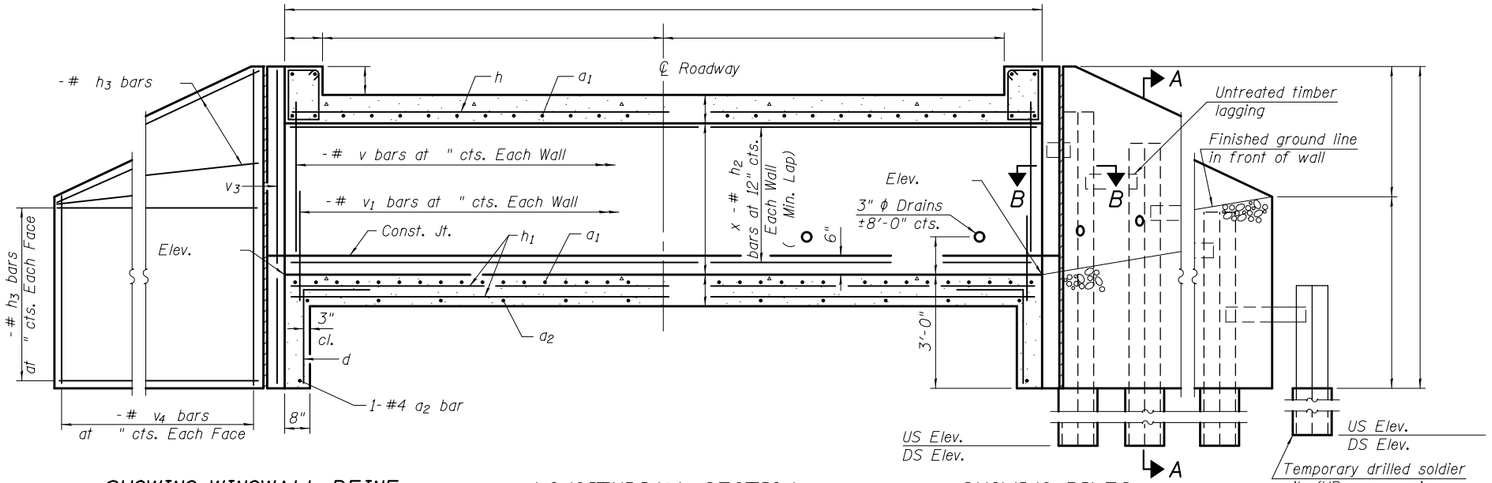

SHOWING WINGWALL REINF.

LONGITUDINAL SECTION

SHOWING PILES

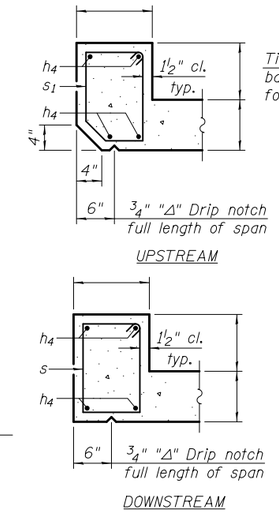

SECTION THRU HEADWALL

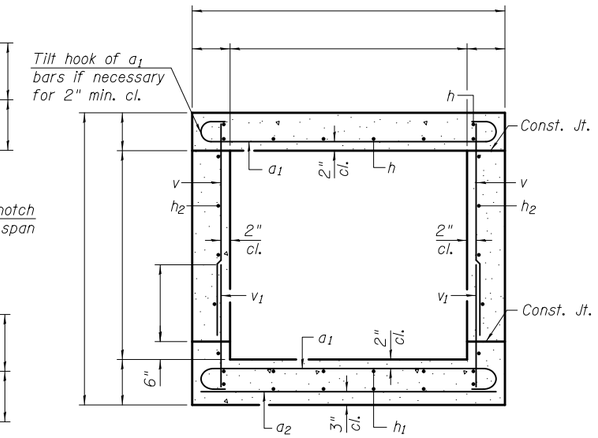

SECTION THRU BARREL

BILL OF MATERIAL

Bar	No.	Size	Length	Shape
a_1		#		
a_2		#		
d		#4	4'-5"	
h		#		
h_1		#		
h_2		#		
h_3		#		
h_4		#		
s		#		
s_1		#		
v		#		
v_1		#		
v_3		#		
v_4		#		
Concrete Box Culverts			Cu. Yd.	
Reinforcement Bars			Pound	
Furnishing Soldier Piles			Foot	
Drilling and Setting Soldier Piles (In soil)			Cu. Ft.	
Drilling and Setting Soldier Piles (In rock)			Cu. Ft.	
Untreated Timber Lagging			Sq. Ft.	
Geocomposite Wall Drain			Sq. Yd.	
Stud Shear Connectors			Each	

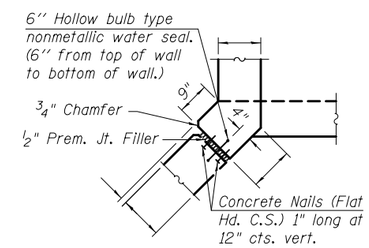

CORNER DETAIL

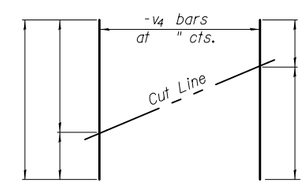

FIELD CUTTING DIAGRAM

Order bars shown full length. Cut as shown and use remainder of bars in opposite wingwall.

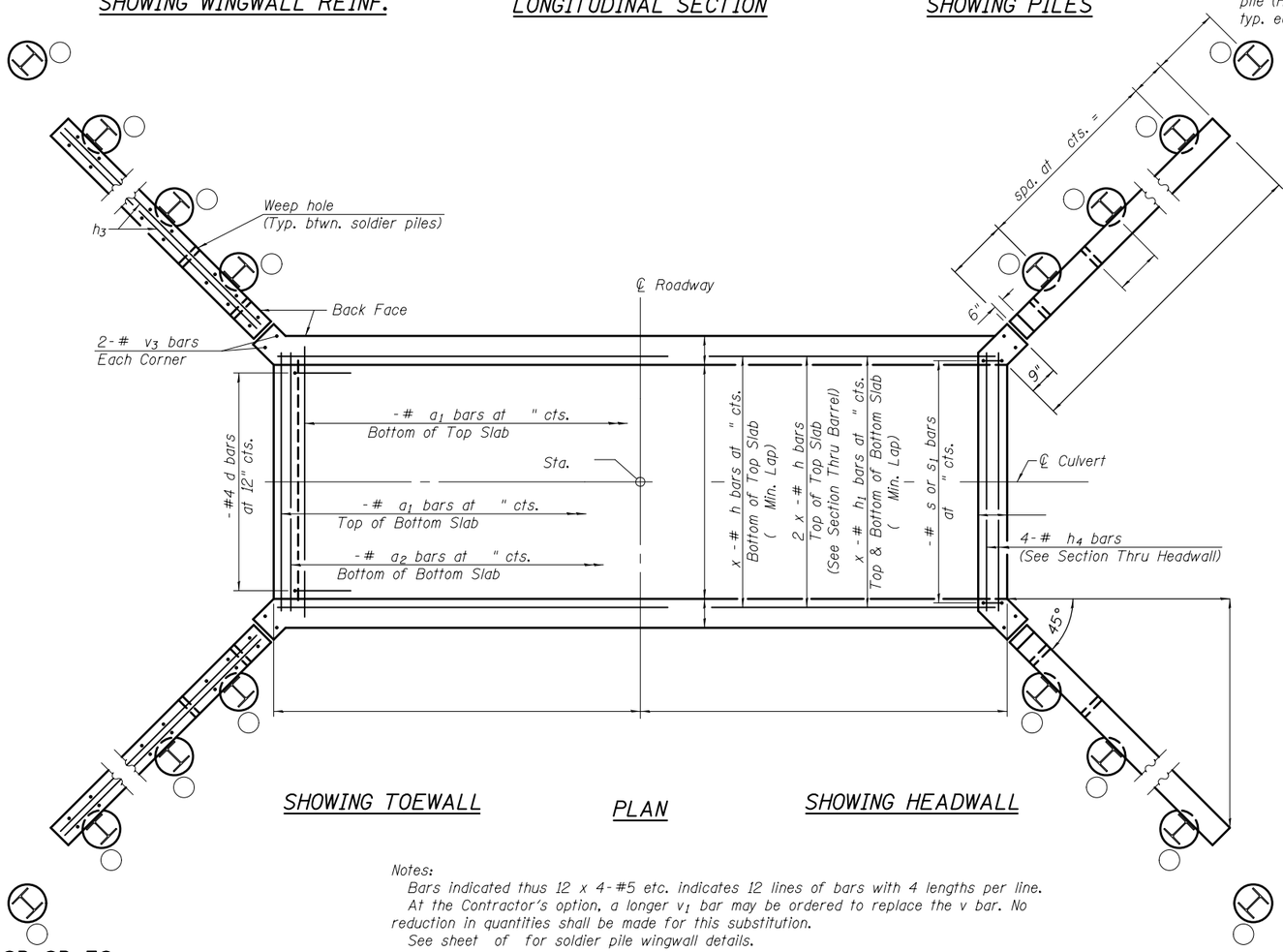

SHOWING TOEWALL

PLAN

SHOWING HEADWALL

Notes:
Bars indicated thus 12 x 4-#5 etc. indicates 12 lines of bars with 4 lengths per line.
At the Contractor's option, a longer v_1 bar may be ordered to replace the v bar. No reduction in quantities shall be made for this substitution.
See sheet of for soldier pile wingwall details.

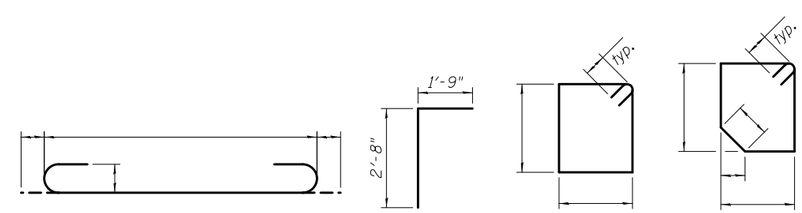

BAR a_1 BAR d BAR s BAR s_1

(Sheet 1 of 2)

TSB-SB-SP-ZS

10-15-2016

FILE NAME =	USER NAME =	DESIGNED -	REVISED
		CHECKED -	REVISED
	PLOT SCALE =	DRAWN -	REVISED
	PLOT DATE =	CHECKED -	REVISED

STATE OF ILLINOIS
DEPARTMENT OF TRANSPORTATION

CULVERT DETAILS
STRUCTURE NO.

SHEET NO. OF SHEETS

F.A. RTE.	SECTION	COUNTY	TOTAL SHEETS	SHEET NO.

CONTRACT NO.

ILLINOIS FED. AID PROJECT

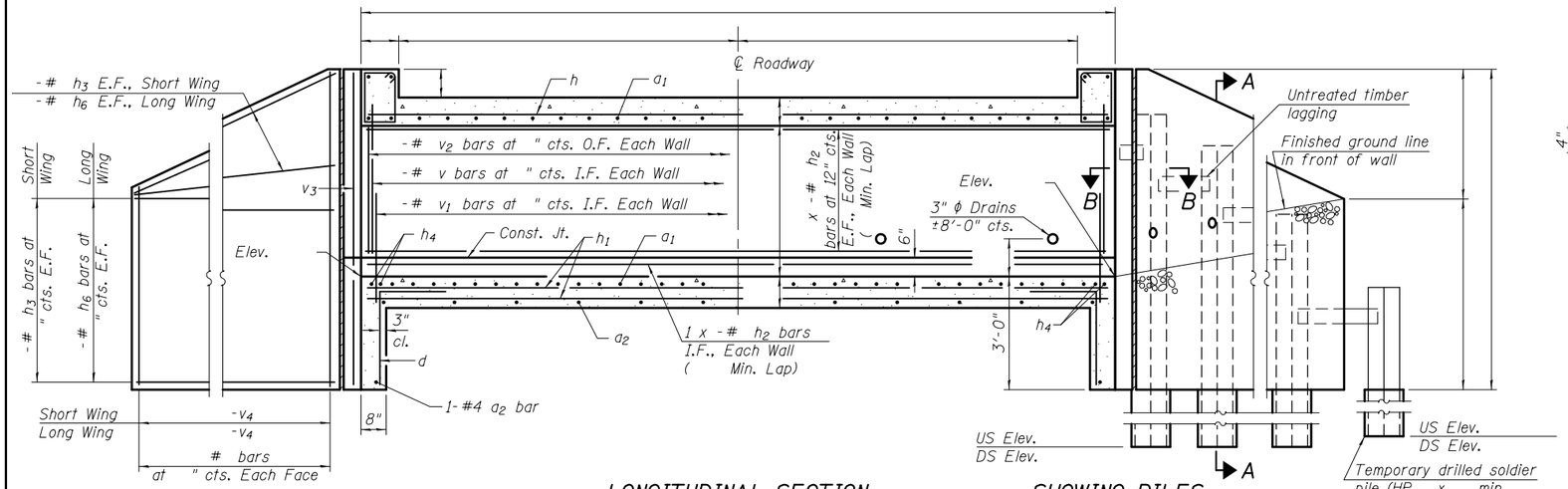

SHOWING WINGWALL REINF.

LONGITUDINAL SECTION

(Dimensions at Rt. L's to ℄ Roadway)

SHOWING PILES

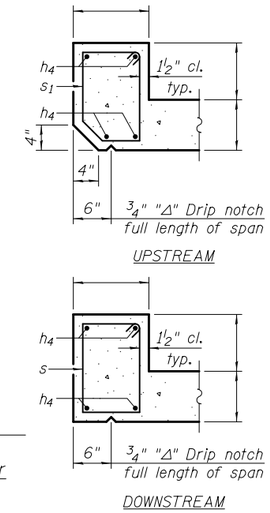

SECTION THRU HEADWALL

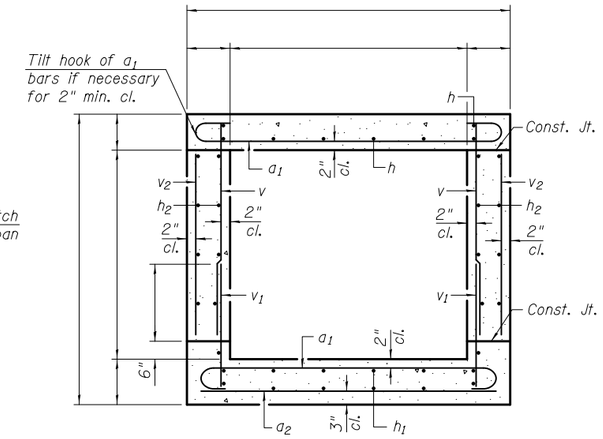

SECTION THRU BARREL

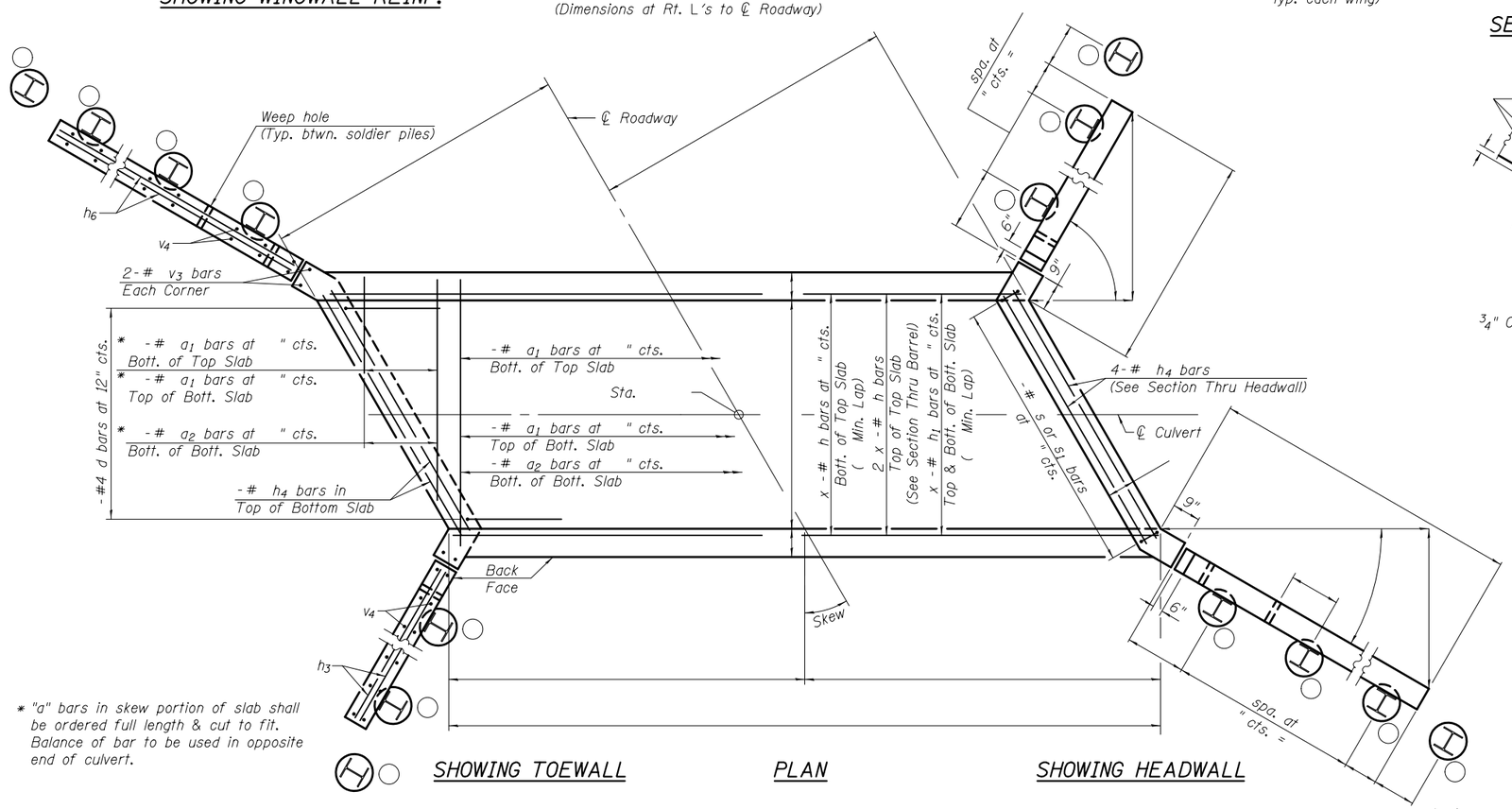

SHOWING TOEWALL

PLAN

SHOWING HEADWALL

* "a" bars in skew portion of slab shall be ordered full length & cut to fit. Balance of bar to be used in opposite end of culvert.

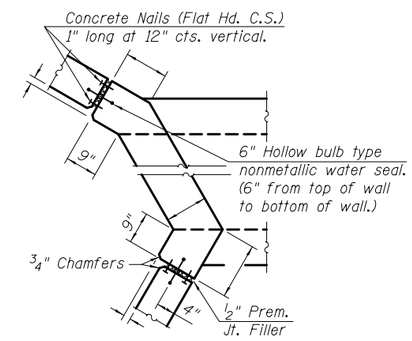

CORNER DETAIL

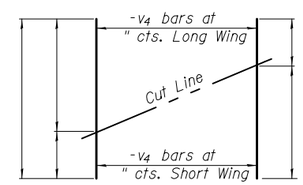

FIELD CUTTING DIAGRAM

Order bars shown full length. Cut as shown and use remainder of bars in opposite face.

BILL OF MATERIAL

Bar	No.	Size	Length	Shape
a_1		#		
a_2		#		
d		#4	4'-5"	
h		#		
h_1		#		
h_2		#		
h_3		#		
h_4		#		
h_6		#		
s		#		
s_1		#		
v		#		
v_1		#		
v_2		#		
v_3		#		
v_4		#		
Concrete Box Culverts		Cu. Yd.		
Reinforcement Bars		Pound		
Furnishing Soldier Piles		Foot		
Drilling and Setting Soldier Piles (In soil)		Cu. Ft.		
Drilling and Setting Soldier Piles (In rock)		Cu. Ft.		
Untreated Timber Lagging		Sq. Ft.		
Geocomposite Wall Drain		Sq. Yd.		
Stud Shear Connectors		Each		

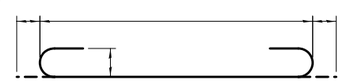

BAR a_1

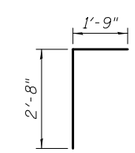

BAR d

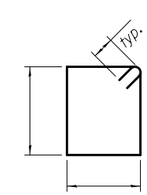

BAR s

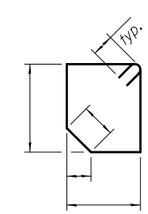

BAR s_1

Notes:

Bars indicated thus 12 x 4-#5 etc. indicates 12 lines of bars with 4 lengths per line.

At the Contractor's option, a longer v_1 bar may be ordered to replace the v bar. No reduction in quantities shall be made for this substitution.

See sheet of for soldier pile wingwall details.

(Sheet 1 of 2)

TSB-SC-SP-LS

10-15-2016

FILE NAME =	USER NAME =	DESIGNED -	REVISED	STATE OF ILLINOIS DEPARTMENT OF TRANSPORTATION	CULVERT DETAILS STRUCTURE NO.	F.A. RTE.	SECTION	COUNTY	TOTAL SHEETS	SHEET NO.
		CHECKED -	REVISED							
	PLOT SCALE =	DRAWN -	REVISED					CONTRACT NO.		
	PLOT DATE =	CHECKED -	REVISED		SHEET NO. OF SHEETS		ILLINOIS	FED. AID PROJECT		

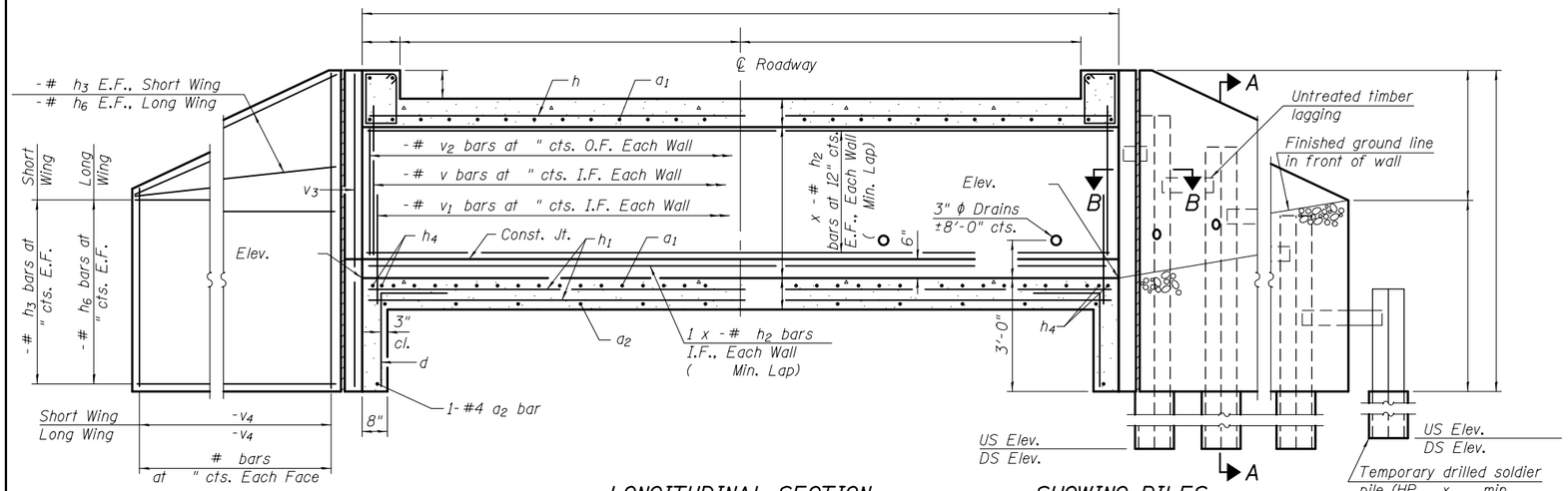

SHOWING WINGWALL REINF.

LONGITUDINAL SECTION

(Dimensions at Rt. L's to ℄ Roadway)

SHOWING PILES

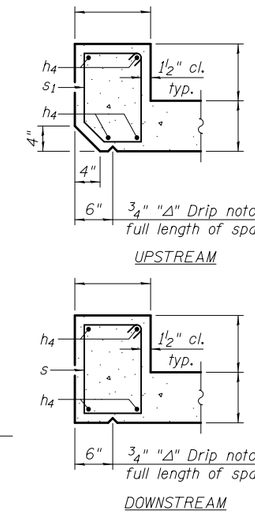

SECTION THRU HEADWALL

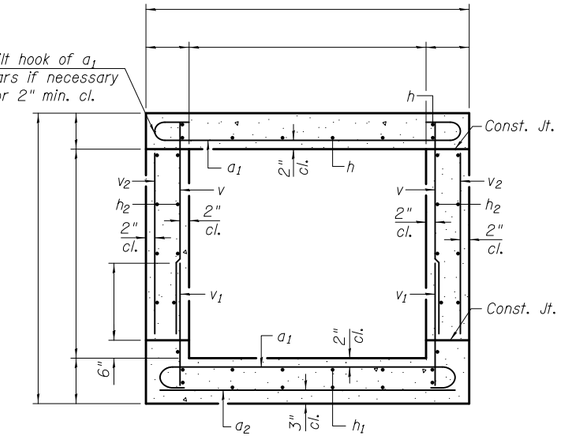

SECTION THRU BARREL

BILL OF MATERIAL

Bar	No.	Size	Length	Shape
a_1		#		
a_2		#		
d		#4	4'-5"	
h		#		
h_1		#		
h_2		#		
h_3		#		
h_4		#		
h_6		#		
s		#		
s_1		#		
v		#		
v_1		#		
v_3		#		
v_4		#		
Concrete Box Culverts		Cu. Yd.		
Reinforcement Bars		Pound		
Furnishing Soldier Piles		Foot		
Drilling and Setting Soldier Piles (In soil)		Cu. Ft.		
Drilling and Setting Soldier Piles (In rock)		Cu. Ft.		
Untreated Timber Lagging		Sq. Ft.		
Geocomposite Wall Drain		Sq. Yd.		
Stud Shear Connectors		Each		

* "a" bars in skew portion of slab shall be ordered full length & cut to fit. Balance of bar to be used in opposite end of culvert.

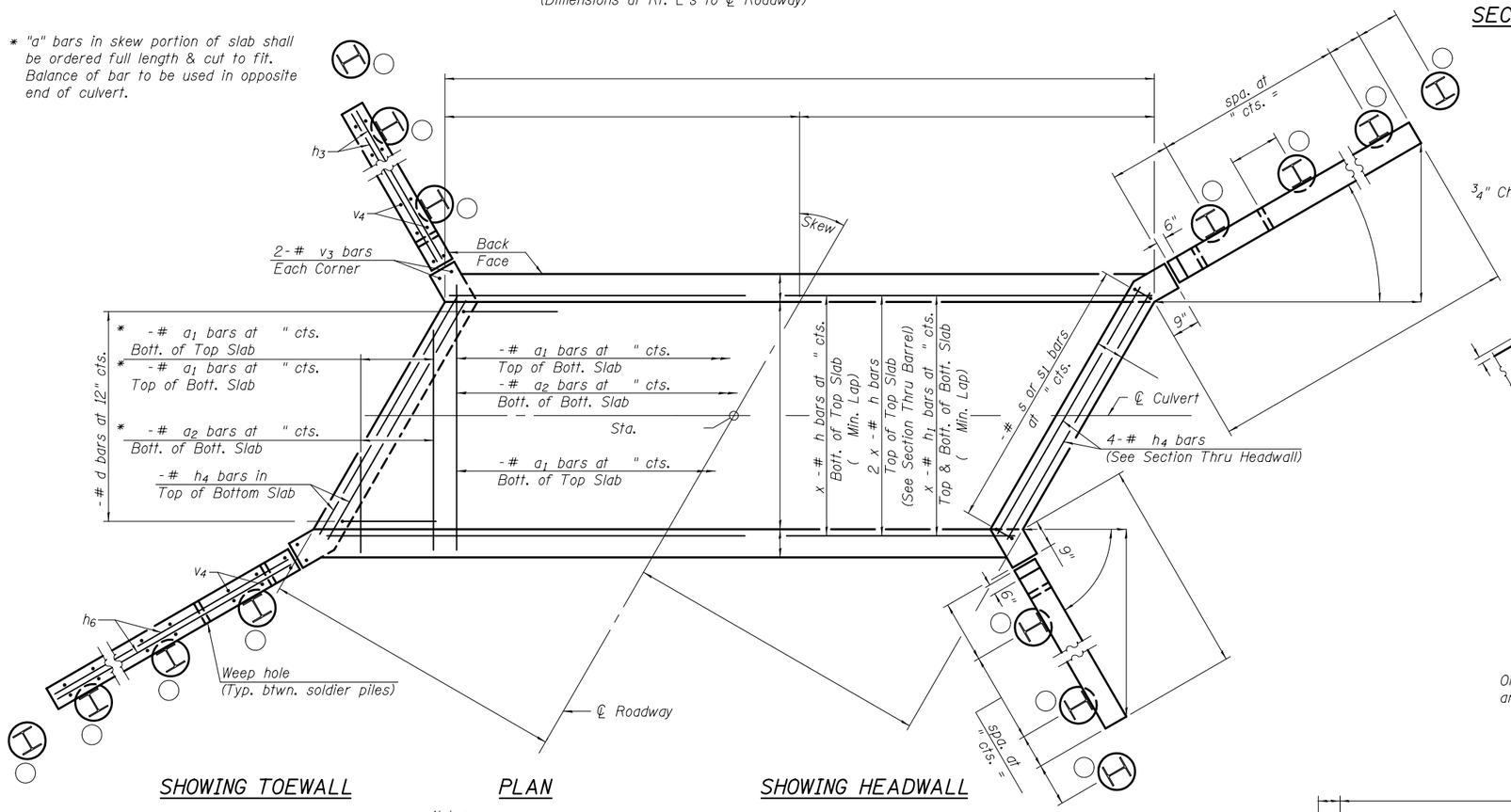

SHOWING TOEWALL

PLAN

SHOWING HEADWALL

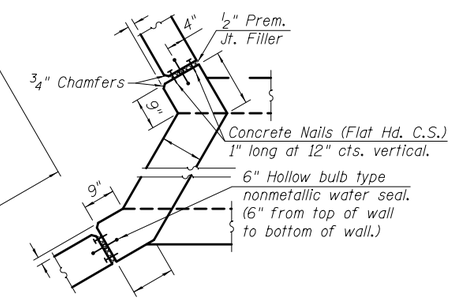

CORNER DETAIL

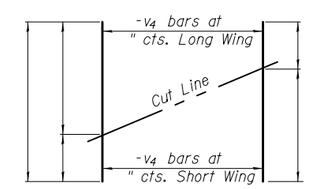

FIELD CUTTING DIAGRAM

Order bars shown full length. Cut as shown and use remainder of bars in opposite face.

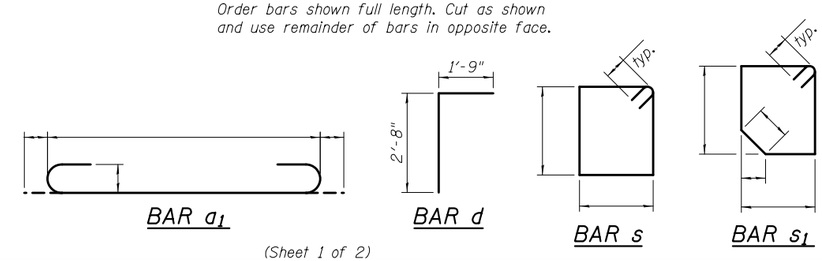

BAR a_1

BAR d

BAR s

BAR s_1

Notes:

Bars indicated thus 12 x 4-#5 etc. indicates 12 lines of bars with 4 lengths per line.

At the Contractor's option, a longer v_1 bar may be ordered to replace the v bar. No reduction in quantities shall be made for this substitution.

See sheet of for soldier pile wingwall details.

TSB-SC-SP-RS 10-15-2016

(Sheet 1 of 2)

FILE NAME =	USER NAME =	DESIGNED -	REVISED	STATE OF ILLINOIS DEPARTMENT OF TRANSPORTATION	CULVERT DETAILS STRUCTURE NO.	F.A. RTE.	SECTION	COUNTY	TOTAL SHEETS	SHEET NO.
		CHECKED -	REVISED							
	PLOT SCALE =	DRAWN -	REVISED					CONTRACT NO.		
	PLOT DATE =	CHECKED -	REVISED		SHEET NO. OF SHEETS		ILLINOIS FED. AID PROJECT			

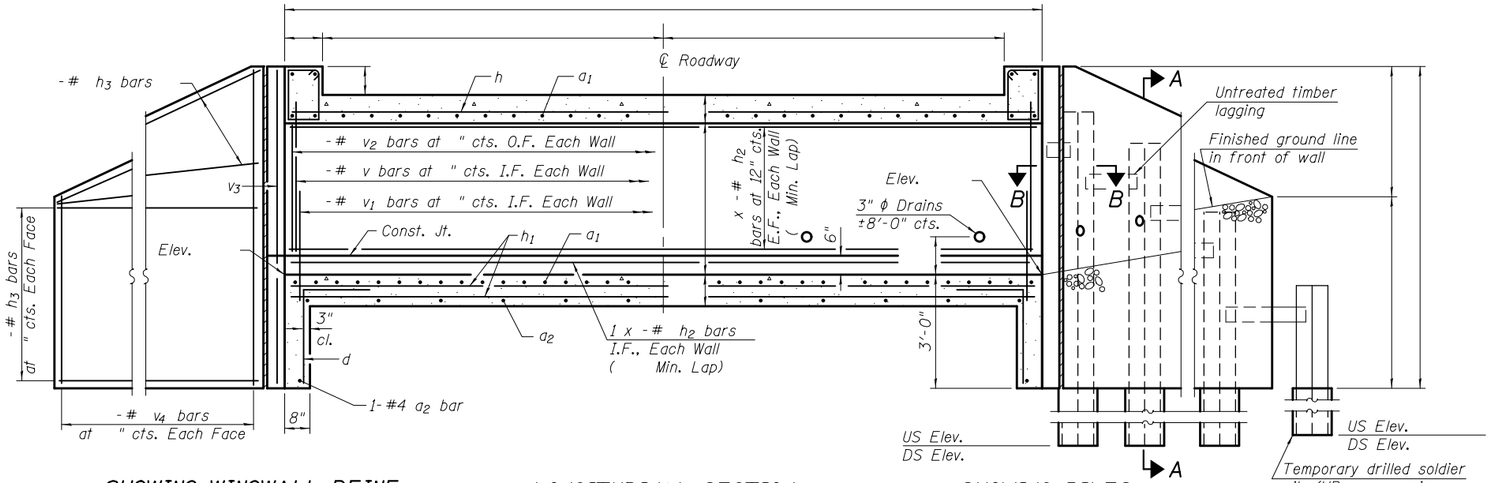

SHOWING WINGWALL REINF.

LONGITUDINAL SECTION

SHOWING PILES

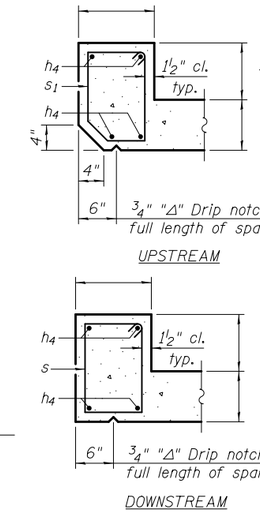

SECTION THRU HEADWALL

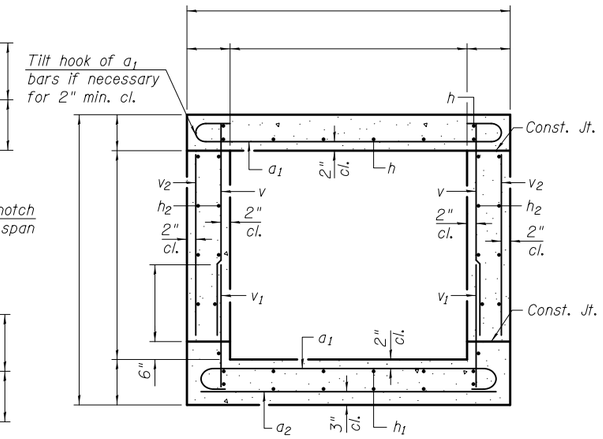

SECTION THRU BARREL

BILL OF MATERIAL

Bar	No.	Size	Length	Shape
a_1		#		
a_2		#		
d		#4	4'-5"	
h		#		
h_1		#		
h_2		#		
h_3		#		
h_4		#		
s		#		
s_1		#		
v		#		
v_1		#		
v_2		#		
v_3		#		
v_4		#		
Concrete Box Culverts			Cu. Yd.	
Reinforcement Bars			Pound	
Furnishing Soldier Piles			Foot	
Drilling and Setting Soldier Piles (In soil)			Cu. Ft.	
Drilling and Setting Soldier Piles (In rock)			Cu. Ft.	
Untreated Timber Lagging			Sq. Ft.	
Geocomposite Wall Drain			Sq. Yd.	
Stud Shear Connectors			Each	

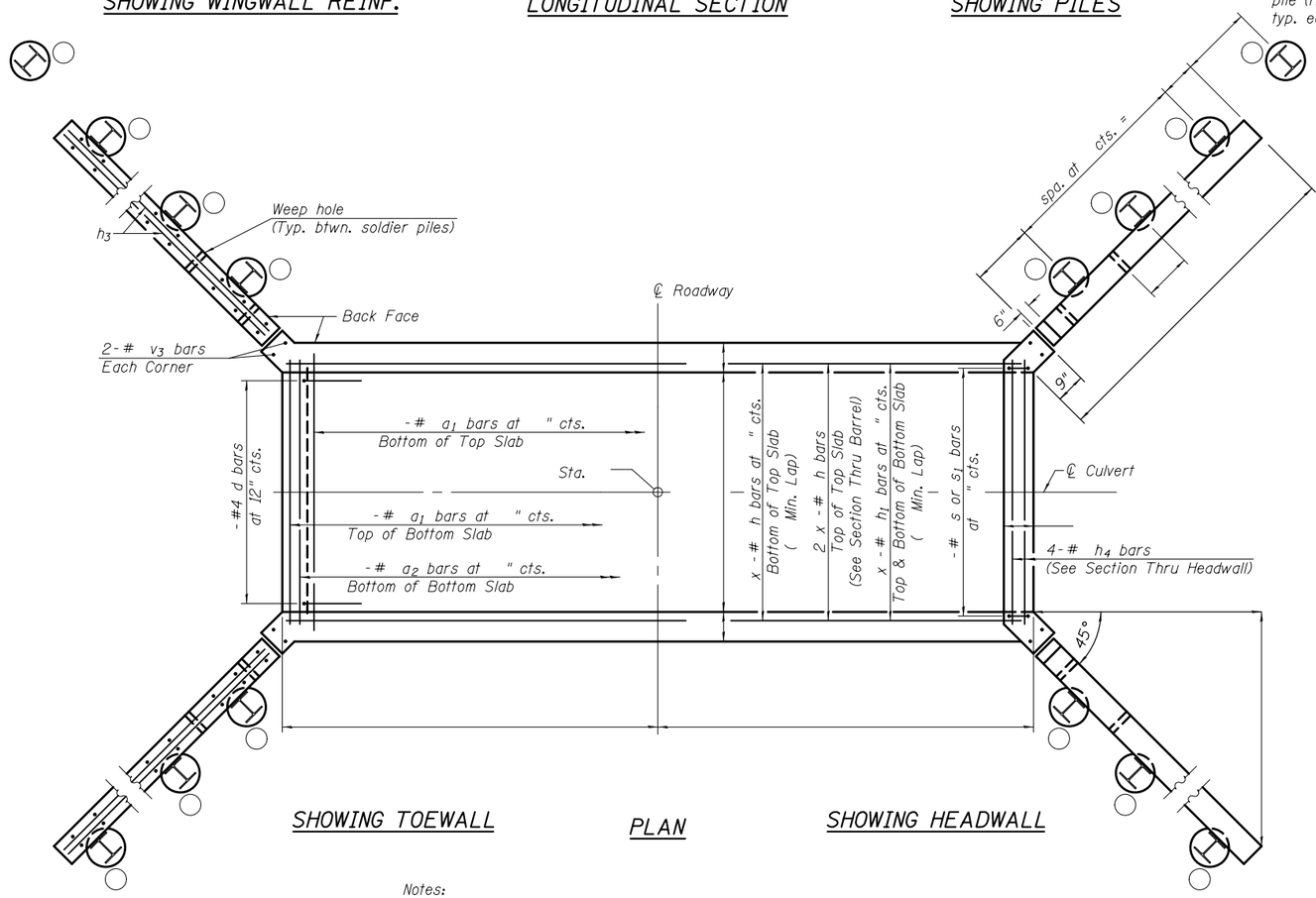

SHOWING TOEWALL

PLAN

SHOWING HEADWALL

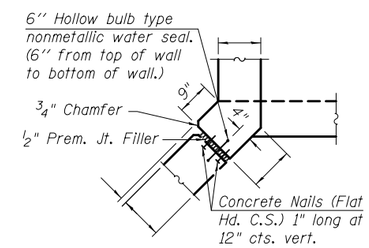

CORNER DETAIL

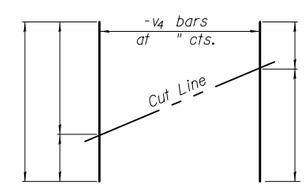

FIELD CUTTING DIAGRAM

Order bars shown full length. Cut as shown and use remainder of bars in opposite wingwall.

Notes:

Bars indicated thus 12 x 4-#5 etc. indicates 12 lines of bars with 4 lengths per line.

At the Contractor's option, a longer v_1 bar may be ordered to replace the v bar. No reduction in quantities shall be made for this substitution.

See sheet of for soldier pile wingwall details.

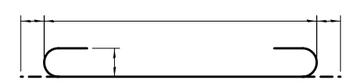

BAR a_1

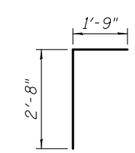

BAR d

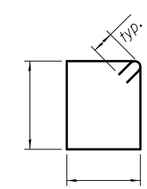

BAR s

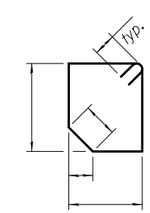

BAR s_1

TSB-SC-SP-ZS

10-15-2016

(Sheet 1 of 2)

FILE NAME =	USER NAME =	DESIGNED -	REVISED	STATE OF ILLINOIS DEPARTMENT OF TRANSPORTATION	CULVERT DETAILS STRUCTURE NO.	F.A. RTE.	SECTION	COUNTY	TOTAL SHEETS	SHEET NO.
		CHECKED -	REVISED							
	PLOT SCALE =	DRAWN -	REVISED					CONTRACT NO.		
	PLOT DATE =	CHECKED -	REVISED		SHEET NO. OF SHEETS		ILLINOIS	FED. AID PROJECT		