CELL / MODEL NAME	DESCRIPTION	DATE
TSA-SB-HC-LS	2 rows of reinf in top slab; 1 row of reinf in each sidewall; Horizontal Cantilever Wingwalls, Left Skew	2/17/2017
TSA-SB-HC-RS	2 rows of reinf in top slab; 1 row of reinf in each sidewall; Horizontal Cantilever Wingwalls, Right Skew	2/17/2017
TSA-SB-HC-ZS	2 rows of reinf in top slab; 1 row of reinf in each sidewall; Horizontal Cantilever Wingwalls, Zero Skew	2/17/2017
TSA-SC-HC-LS	2 rows of reinf in top slab; 2 rows of reinf in each sidewall; Horizontal Cantilever Wingwalls, Left Skew	2/17/2017
TSA-SC-HC-RS	2 rows of reinf in top slab; 2 rows of reinf in each sidewall; Horizontal Cantilever Wingwalls, Right Skew	2/17/2017
TSA-SC-HC-ZS	2 rows of reinf in top slab; 2 rows of reinf in each sidewall; Horizontal Cantilever Wingwalls, Zero Skew	2/17/2017
TSB-SB-HC-LS	1 row of reinf in top slab; 1 row of reinf in each sidewall; Horizontal Cantilever Wingwalls, Left Skew	2/17/2017
TSB-SB-HC-RS	1 row of reinf in top slab; 1 row of reinf in each sidewall; Horizontal Cantilever Wingwalls, Right Skew	2/17/2017
TSB-SB-HC-ZS	1 row of reinf in top slab; 1 row of reinf in each sidewall; Horizontal Cantilever Wingwalls, Zero Skew	2/17/2017
TSB-SC-HC-LS	1 row of reinf in top slab; 2 rows of reinf in each sidewall; Horizontal Cantilever Wingwalls, Left Skew	2/17/2017
TSB-SC-HC-RS	1 row of reinf in top slab; 2 rows of reinf in each sidewall; Horizontal Cantilever Wingwalls, Right Skew	2/17/2017
TSB-SC-HC-ZS	1 row of reinf in top slab; 2 rows of reinf in each sidewall; Horizontal Cantilever Wingwalls, Zero Skew	2/17/2017

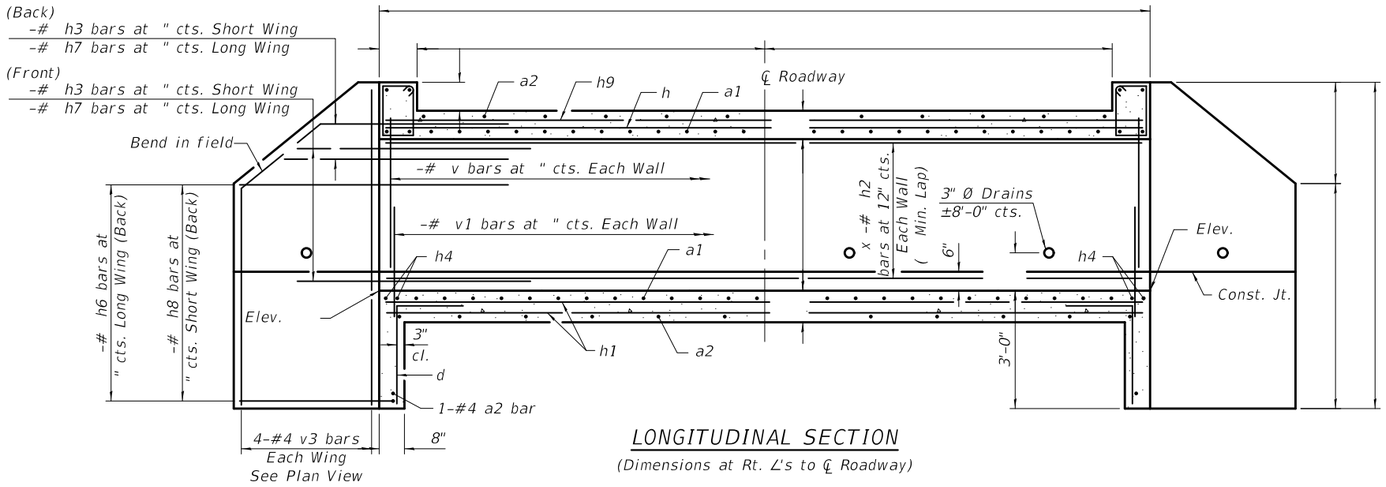

LONGITUDINAL SECTION

(Dimensions at Rt. ∠'s to ℄ Roadway)

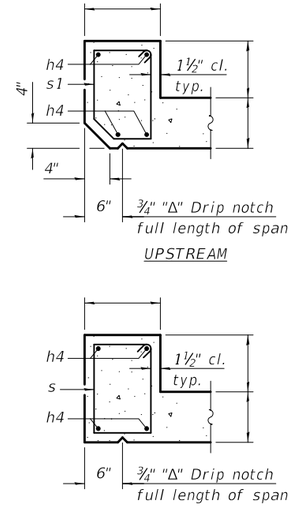

SECTION THRU HEADWALL

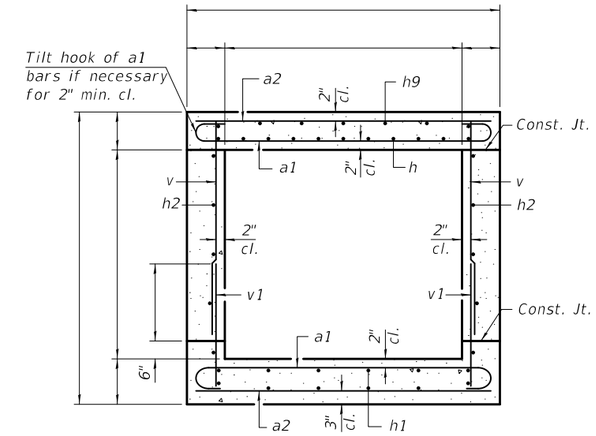

SECTION THRU BARREL

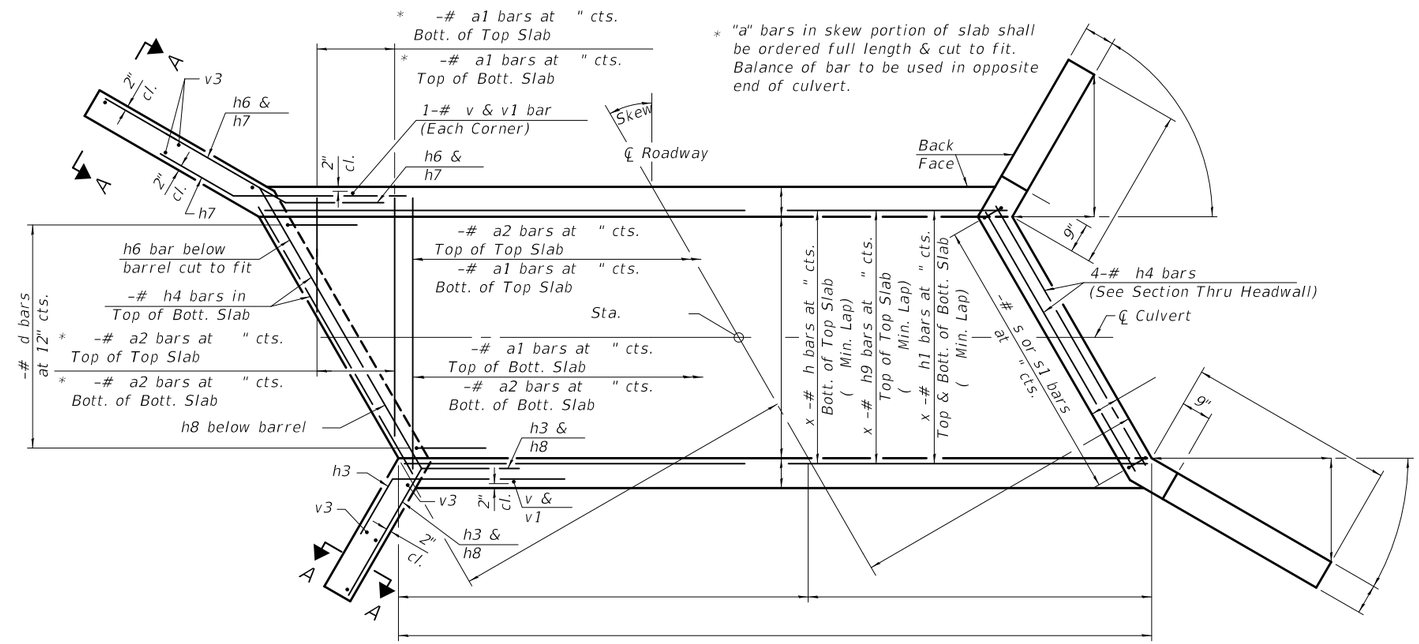

SHOWING TOEWALL

PLAN

SHOWING HEADWALL

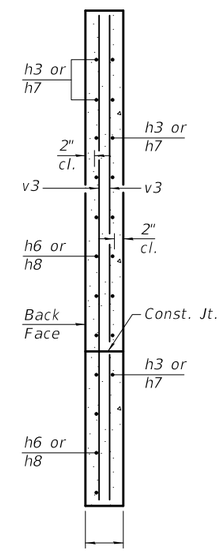

SECTION A-A

BILL OF MATERIAL

Bar	No.	Size	Length	Shape
a1		#		
a2		#		
d		#4	4'-5"	
h		#		
h1		#		
h2		#		
h3		#	8'-0"	
h4		#		
h6		#		
h7		#	8'-0"	
h8		#		
h9		#		
s		#		
s1		#		
v		#		
v1		#		
v3		#4		
Concrete Box Culverts			Cu. Yd.	
Reinforcement Bars			Pound	

Notes:

A distance of half the length of the wingwall but not less than six feet of the barrel shall be poured monolithically with the wingwalls.

Bars indicated thus 12 x 4-#5 etc. indicates 12 lines of bars with 4 lengths per line.

At the Contractor's option, a longer v1 bar may be ordered to replace the v bar. No reduction in quantities shall be made for this substitution.

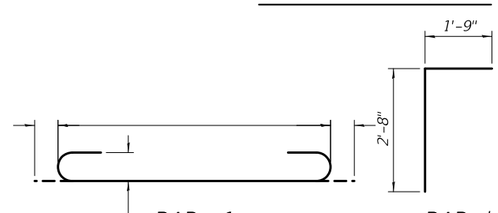

BAR a1 BAR d

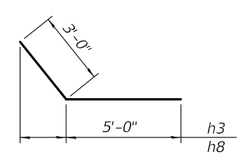

BARS h3 & h8

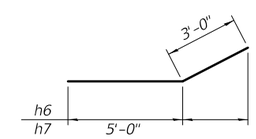

BARS h6 & h7

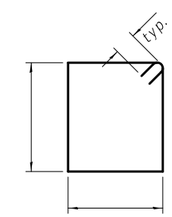

BAR s

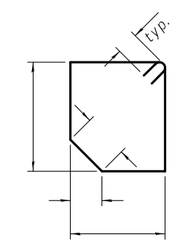

BAR s1

TSA-SB-HC-LS 2-17-2017

FILE NAME =	USER NAME =	DESIGNED -	REVISED -
		CHECKED -	REVISED -
	PLOT SCALE =	DRAWN -	REVISED -
	PLOT DATE =	CHECKED -	REVISED -

STATE OF ILLINOIS
DEPARTMENT OF TRANSPORTATION

CULVERT DETAILS
STRUCTURE NO.

F.A. RTE.	SECTION	COUNTY	TOTAL SHEETS	SHEET NO.

CONTRACT NO.

ILLINOIS FED. AID PROJECT

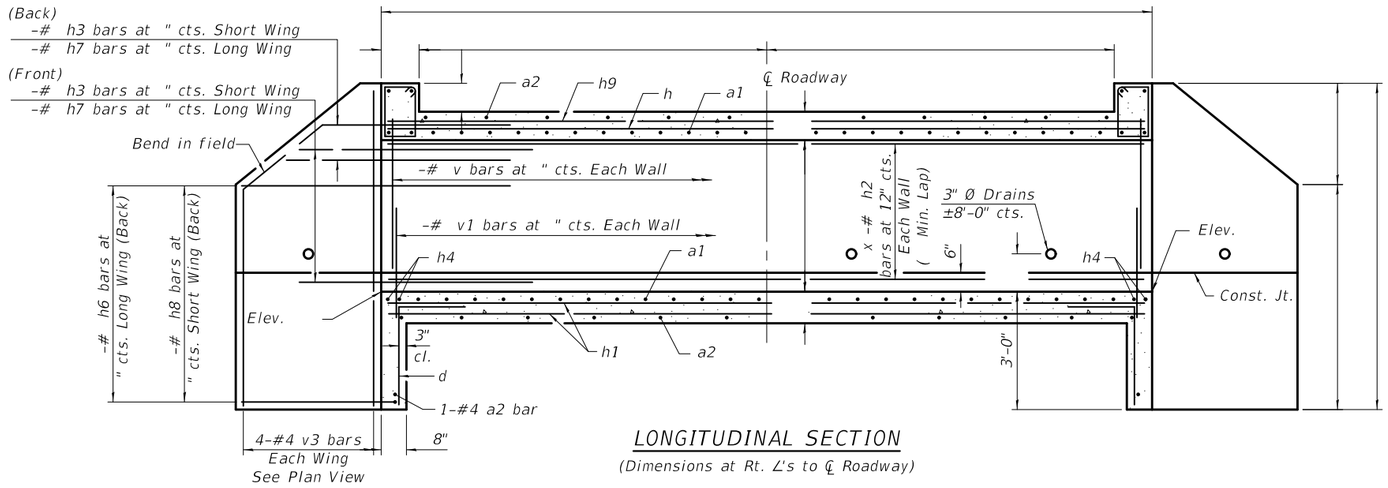

LONGITUDINAL SECTION

(Dimensions at Rt. ∠'s to ℄ Roadway)

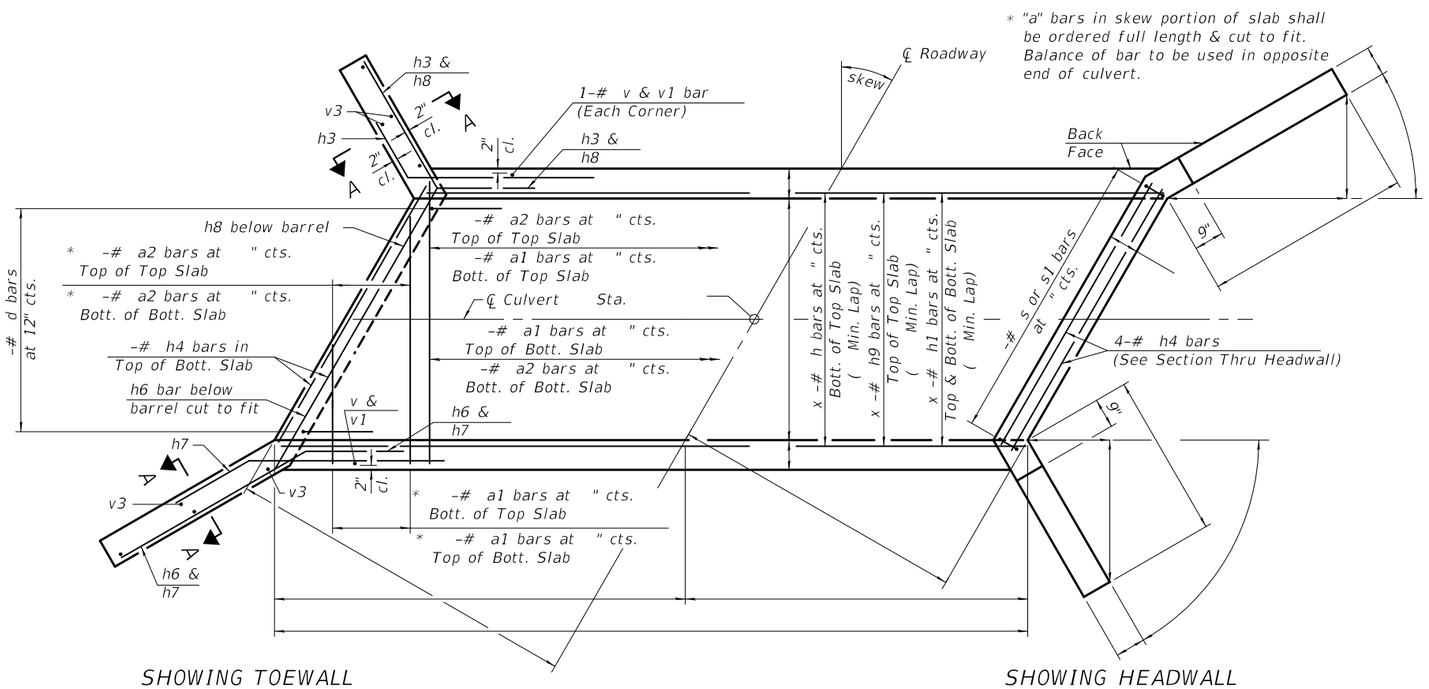

SHOWING TOEWALL

PLAN

SHOWING HEADWALL

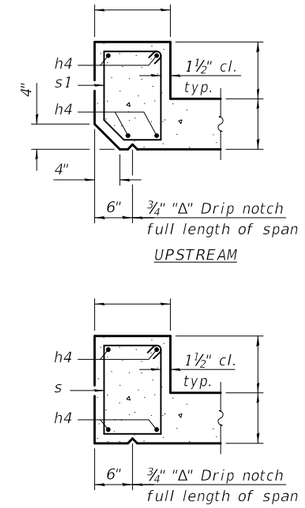

SECTION THRU HEADWALL

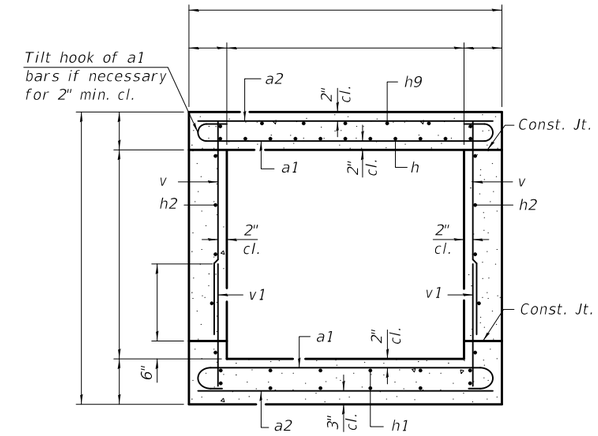

SECTION THRU BARREL

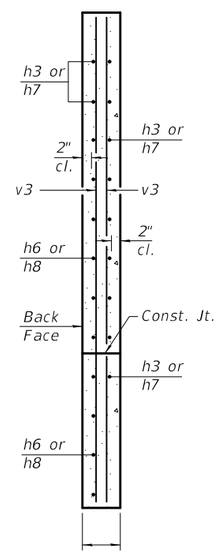

SECTION A-A

BILL OF MATERIAL

Bar	No.	Size	Length	Shape
a1		#		
a2		#		
d		#4	4'-5"	
h		#		
h1		#		
h2		#		
h3		#	8'-0"	
h4		#		
h6		#		
h7		#	8'-0"	
h8		#		
h9		#		
s		#		
s1		#		
v		#		
v1		#		
v3		#4		
Concrete Box Culverts			Cu. Yd.	
Reinforcement Bars			Pound	

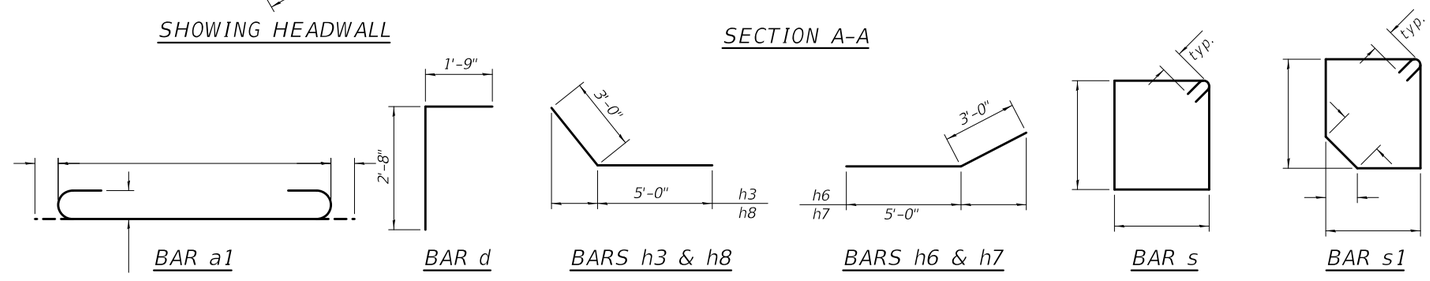

BAR a1 BAR d BARS h3 & h8 BARS h6 & h7 BAR s BAR s1

Notes:

A distance of half the length of the wingwall but not less than six feet of the barrel shall be poured monolithically with the wingwalls.

Bars indicated thus 12 x 4-#5 etc. indicates 12 lines of bars with 4 lengths per line.

At the Contractor's option, a longer v1 bar may be ordered to replace the v bar. No reduction in quantities shall be made for this substitution.

TSA-SB-HC-RS 2-17-2017

FILE NAME =	USER NAME =	DESIGNED -	REVISED -
		CHECKED -	REVISED -
	PLOT SCALE =	DRAWN -	REVISED -
	PLOT DATE =	CHECKED -	REVISED -

STATE OF ILLINOIS
DEPARTMENT OF TRANSPORTATION

CULVERT DETAILS
STRUCTURE NO.

F.A. RTE.	SECTION	COUNTY	TOTAL SHEETS	SHEET NO.
		CONTRACT NO.		
	ILLINOIS	FED. AID PROJECT		

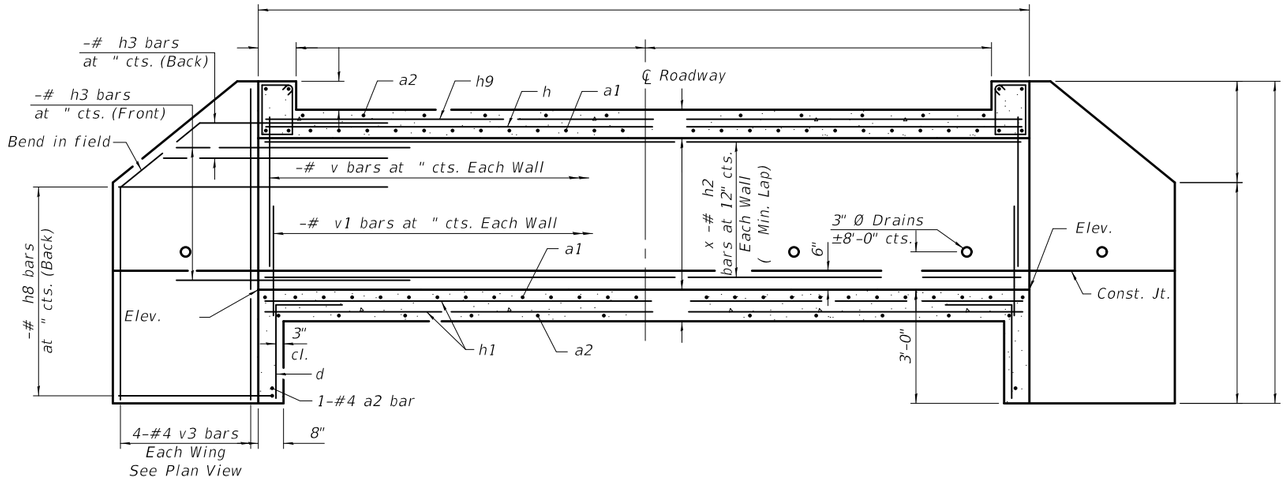

LONGITUDINAL SECTION

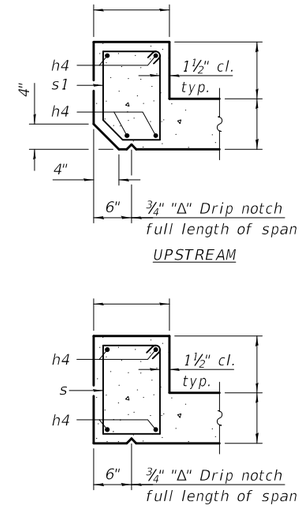

SECTION THRU HEADWALL

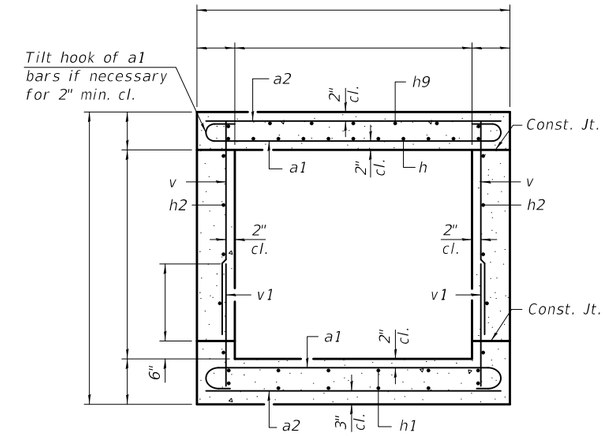

SECTION THRU BARREL

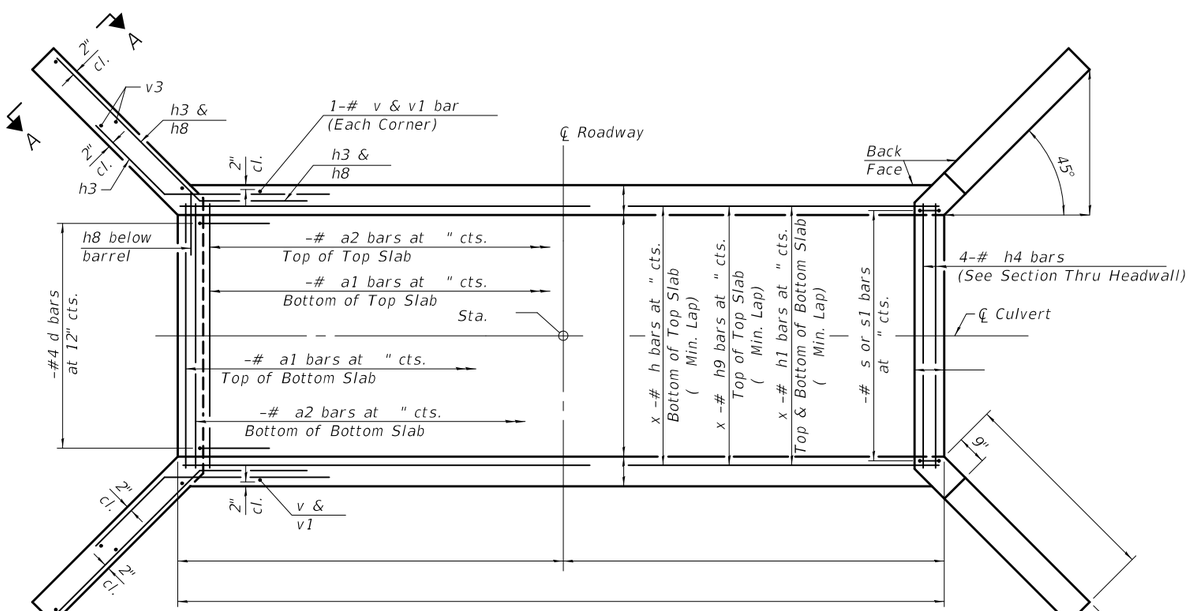

SHOWING TOEWALL

SHOWING HEADWALL

PLAN

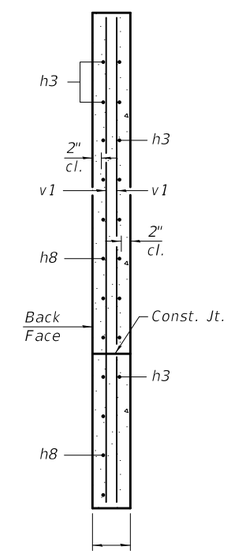

SECTION A-A

BILL OF MATERIAL

Bar	No.	Size	Length	Shape
a1		#		
a2		#		
d		#4	4'-5"	
h		#		
h1		#		
h2		#		
h3		#	8'-0"	
h4		#		
h8		#		
h9		#		
s		#		
s1		#		
v		#		
v1		#		
v3		#4		
Concrete Box Culverts			Cu. Yd.	
Reinforcement Bars			Pound	

Notes:

A distance of half the length of the wingwall but not less than six feet of the barrel shall be poured monolithically with the wingwalls.

Bars indicated thus 12 x 4-#5 etc. indicates 12 lines of bars with 4 lengths per line.

At the Contractor's option, a longer v1 bar may be ordered to replace the v bar. No reduction in quantities shall be made for this substitution.

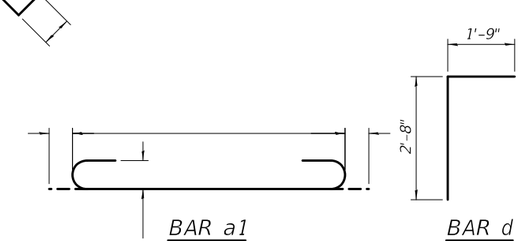

BAR a1 BAR d BARS h3 & h8 BAR s BAR s1

TSA-SB-HC-ZS 2-17-2017

FILE NAME =	USER NAME =	DESIGNED -	REVISED -
		CHECKED -	REVISED -
	PLOT SCALE =	DRAWN -	REVISED -
	PLOT DATE =	CHECKED -	REVISED -

STATE OF ILLINOIS
DEPARTMENT OF TRANSPORTATION

CULVERT DETAILS
STRUCTURE NO.

F.A. RTE.	SECTION	COUNTY	TOTAL SHEETS	SHEET NO.

CONTRACT NO.

ILLINOIS FED. AID PROJECT

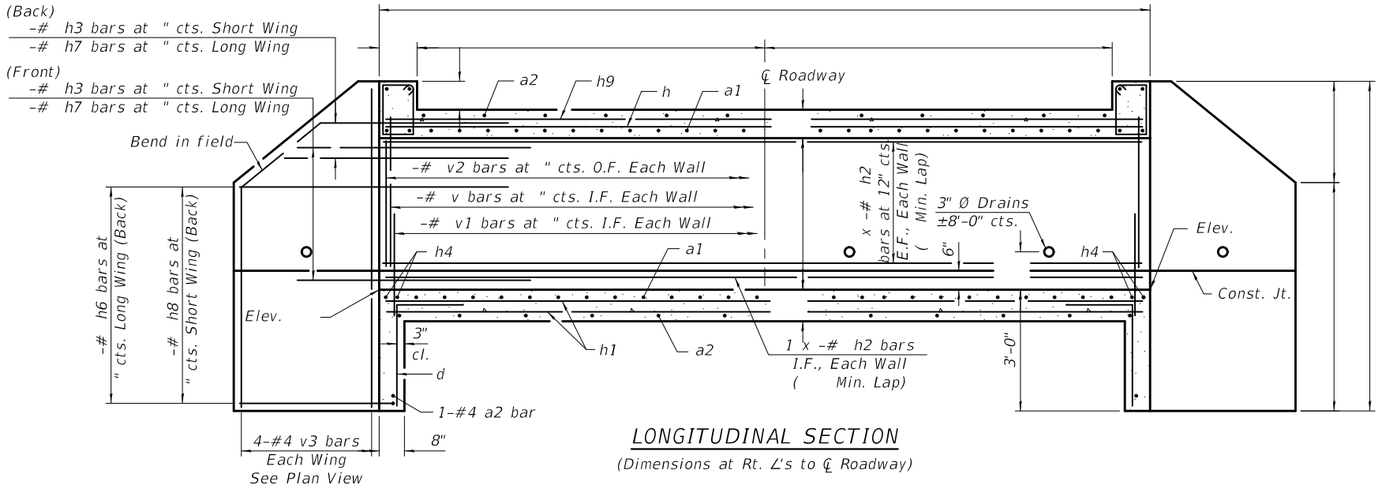

LONGITUDINAL SECTION

(Dimensions at Rt. ∠'s to ℄ Roadway)

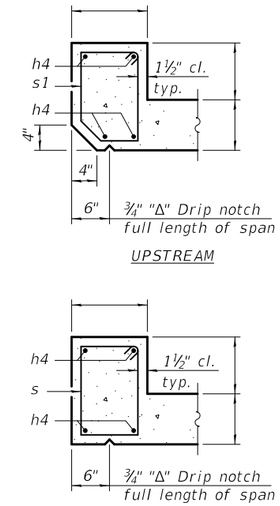

SECTION THRU HEADWALL

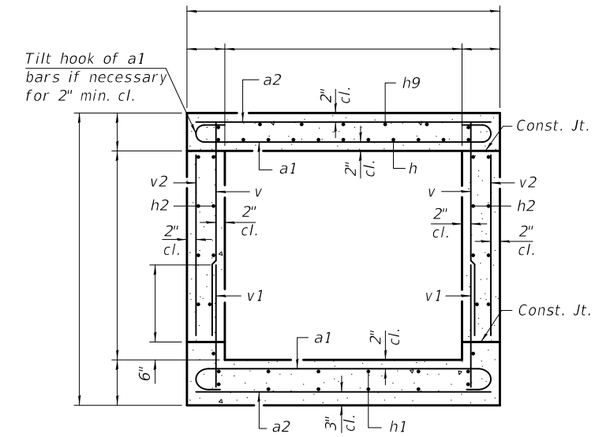

SECTION THRU BARREL

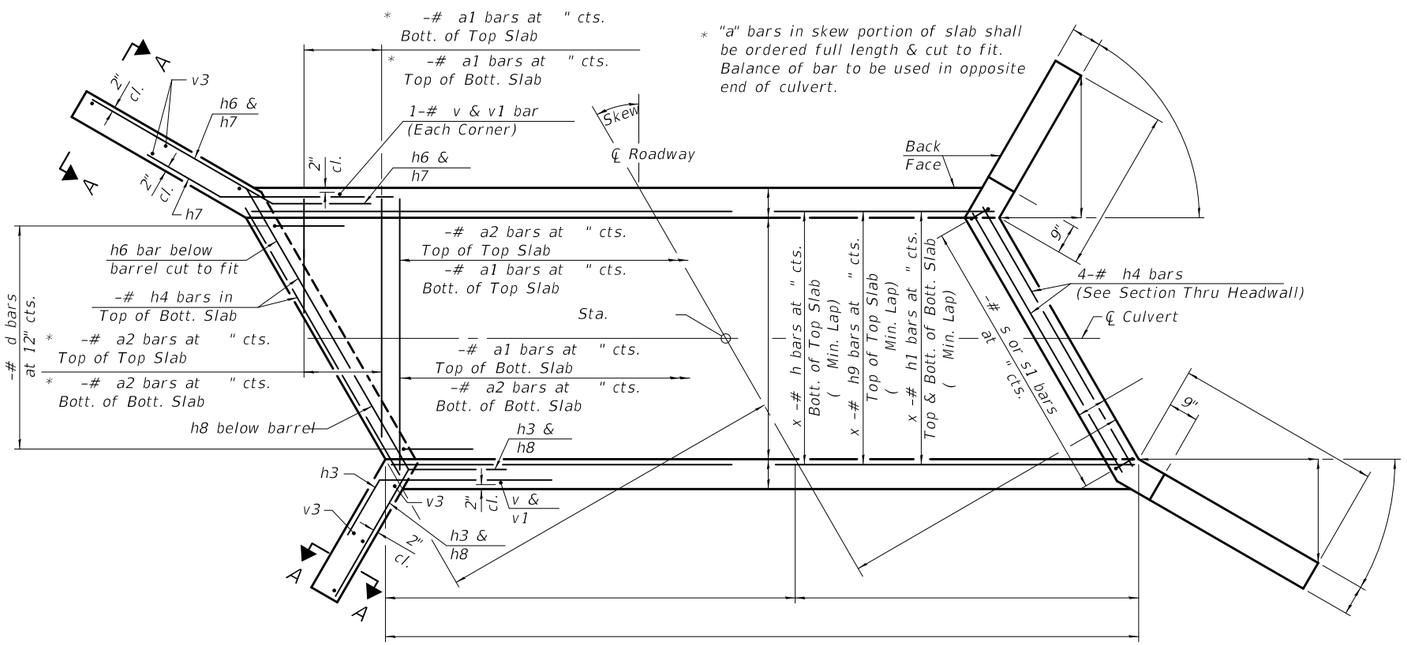

SHOWING TOEWALL

PLAN

SHOWING HEADWALL

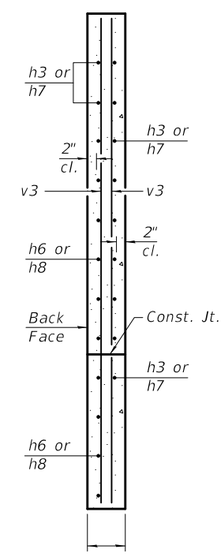

SECTION A-A

BILL OF MATERIAL

Bar	No.	Size	Length	Shape
a1		#		
a2		#		
d		#4	4'-5"	
h		#		
h1		#		
h2		#		
h3		#	8'-0"	
h4		#		
h6		#		
h7		#	8'-0"	
h8		#		
h9		#		
s		#		
s_1		#		
v		#		
v1		#		
v2		#		
v3		#4		
Concrete Box Culverts			Cu. Yd.	
Reinforcement Bars			Pound	

Notes:

A distance of half the length of the wingwall but not less than six feet of the barrel shall be poured monolithically with the wingwalls.

Bars indicated thus 12 x 4-#5 etc. indicates 12 lines of bars with 4 lengths per line.

At the Contractor's option, a longer v1 bar may be ordered to replace the v bar. No reduction in quantities shall be made for this substitution.

BAR a1 BAR d

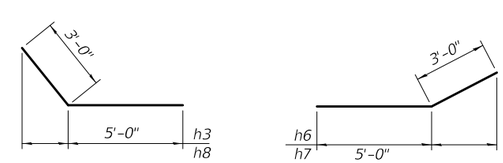

BARS h3 & h8 BARS h6 & h7

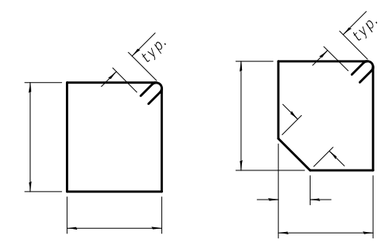

BAR s BAR s1

TSA-SC-HC-LS 2-17-2017

FILE NAME =	USER NAME =	DESIGNED -	REVISED -	STATE OF ILLINOIS DEPARTMENT OF TRANSPORTATION	CULVERT DETAILS STRUCTURE NO.	F.A. RTE.	SECTION	COUNTY	TOTAL SHEETS	SHEET NO.
		CHECKED -	REVISED -							
	PLOT SCALE =	DRAWN -	REVISED -					CONTRACT NO.		
	PLOT DATE =	CHECKED -	REVISED -				ILLINOIS	FED. AID PROJECT		

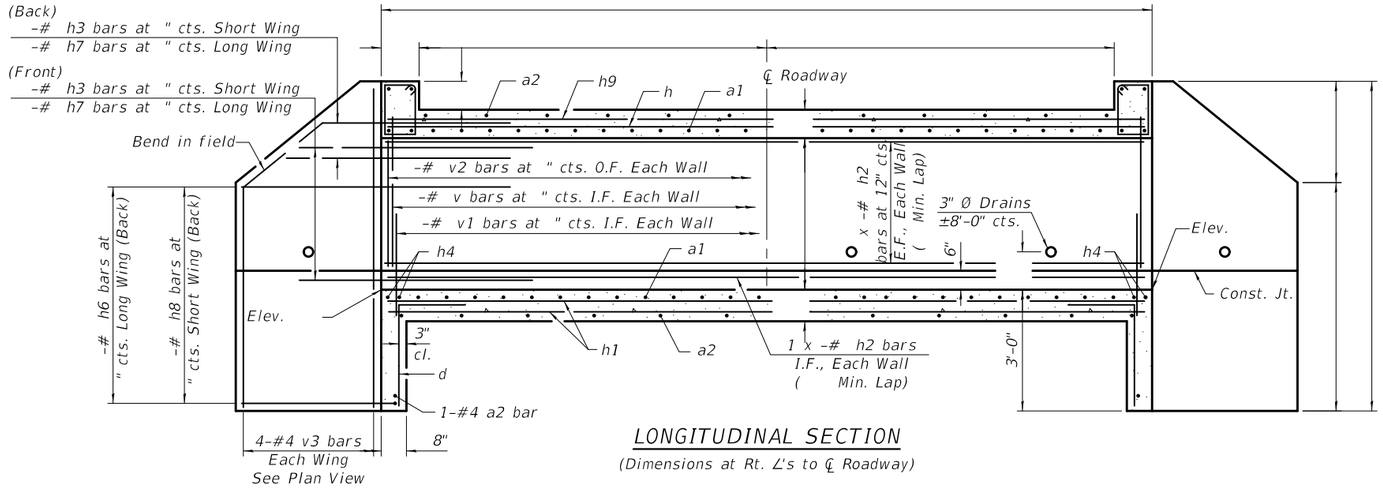

LONGITUDINAL SECTION

(Dimensions at Rt. ∠'s to ℄ Roadway)

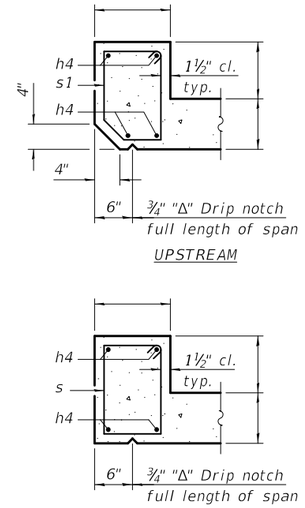

SECTION THRU HEADWALL

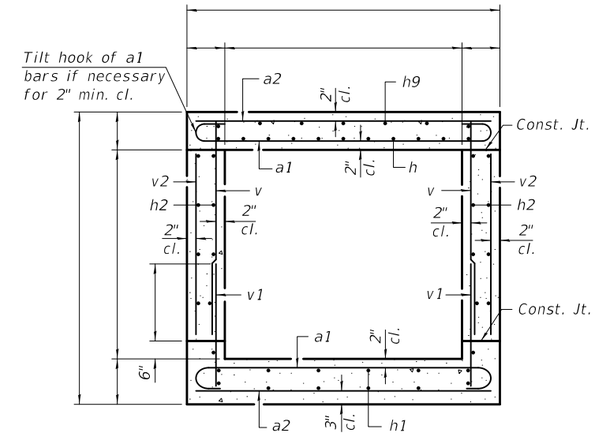

SECTION THRU BARREL

* "a" bars in skew portion of slab shall be ordered full length & cut to fit. Balance of bar to be used in opposite end of culvert.

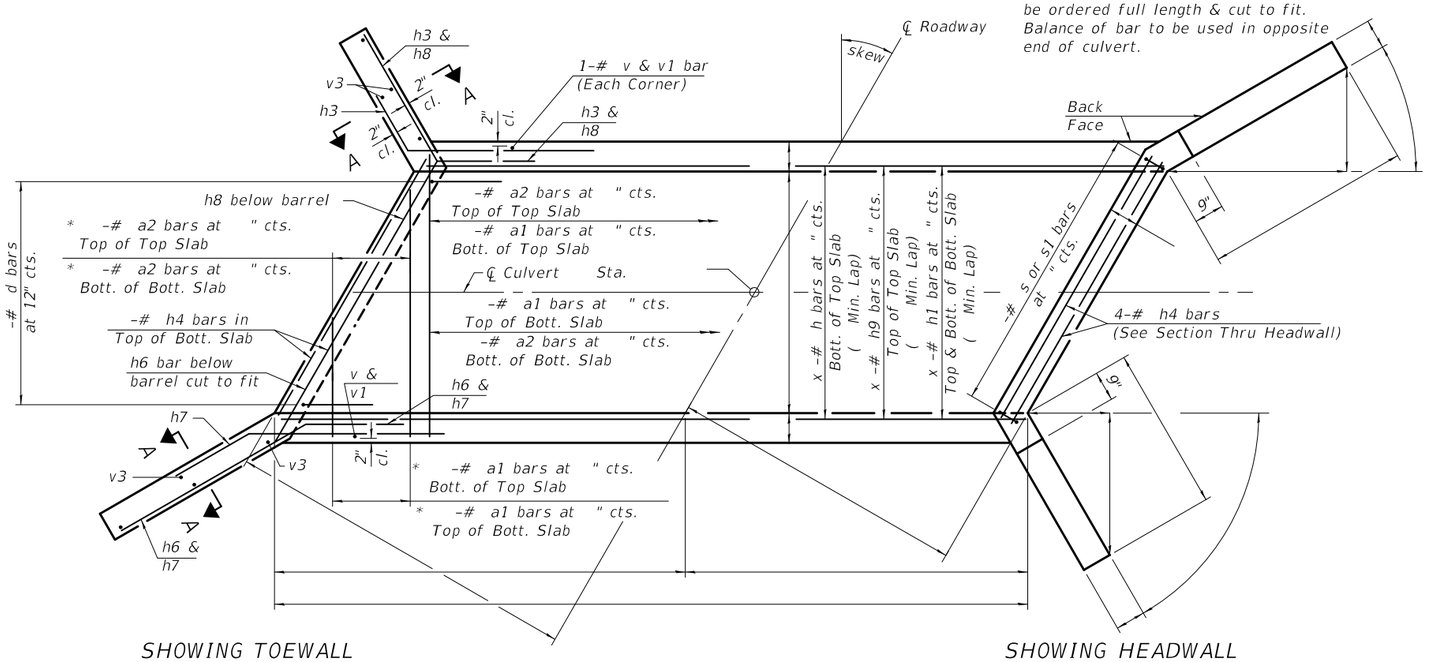

SHOWING TOEWALL

PLAN

SHOWING HEADWALL

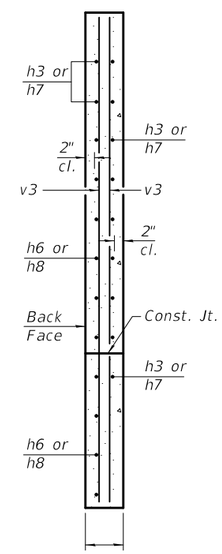

SECTION A-A

BILL OF MATERIAL

Bar	No.	Size	Length	Shape
a1		#		
a2		#		
d		#4	4'-5"	
h		#		
h1		#		
h2		#		
h3		#	8'-0"	
h4		#		
h6		#		
h7		#	8'-0"	
h8		#		
h9		#		
s		#		
s1		#		
v		#		
v1		#		
v2		#		
v3		#4		
Concrete Box Culverts			Cu. Yd.	
Reinforcement Bars			Pound	

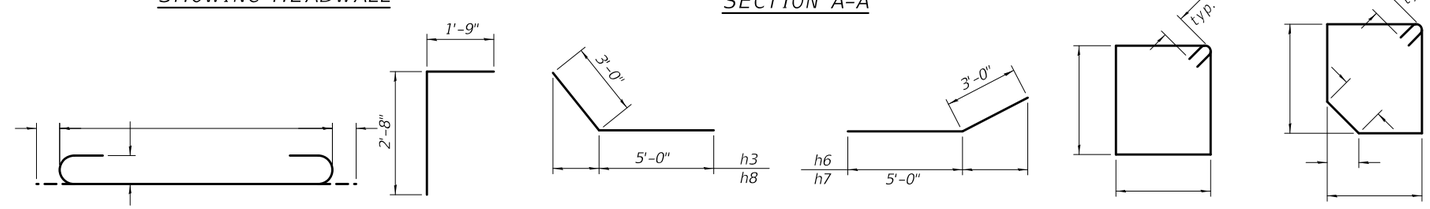

BAR a1 BAR d BARS h3 & h8 BARS h6 & h7 BAR s BAR s1

Notes:

A distance of half the length of the wingwall but not less than six feet of the barrel shall be poured monolithically with the wingwalls.

Bars indicated thus 12 x 4-#5 etc. indicates 12 lines of bars with 4 lengths per line.

At the Contractor's option, a longer v1 bar may be ordered to replace the v bar. No reduction in quantities shall be made for this substitution.

TSA-SC-HC-RS 2-17-2017

FILE NAME =	USER NAME =	DESIGNED -	REVISED -
		CHECKED -	REVISED -
	PLOT SCALE =	DRAWN -	REVISED -
	PLOT DATE =	CHECKED -	REVISED -

STATE OF ILLINOIS
DEPARTMENT OF TRANSPORTATION

CULVERT DETAILS
STRUCTURE NO.

F.A. RTE.	SECTION	COUNTY	TOTAL SHEETS	SHEET NO.
		CONTRACT NO.		
	ILLINOIS	FED. AID PROJECT		

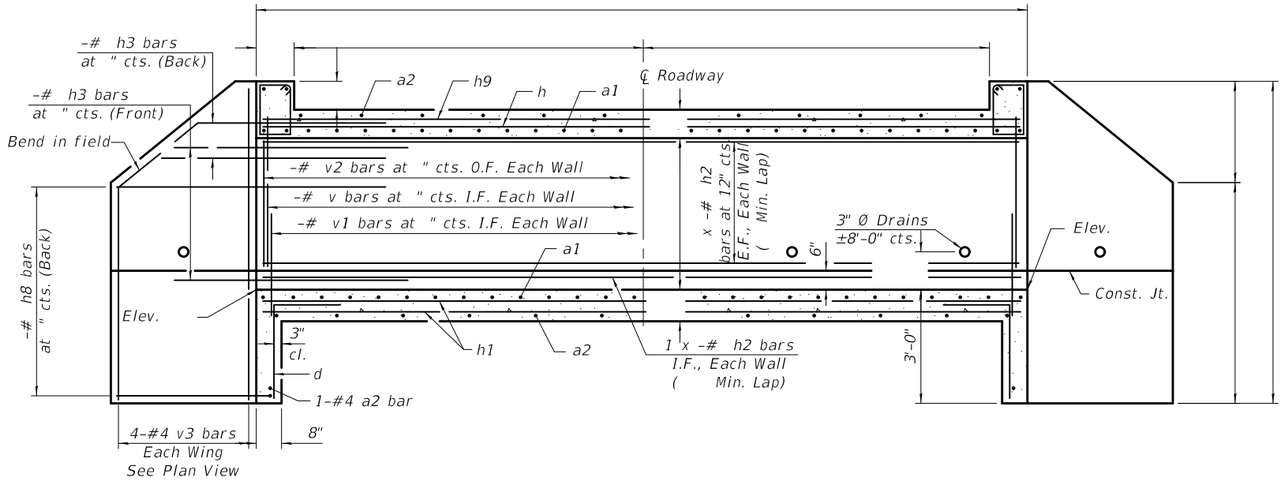

LONGITUDINAL SECTION

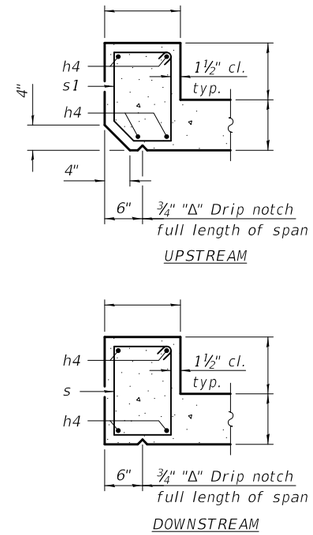

SECTION THRU HEADWALL

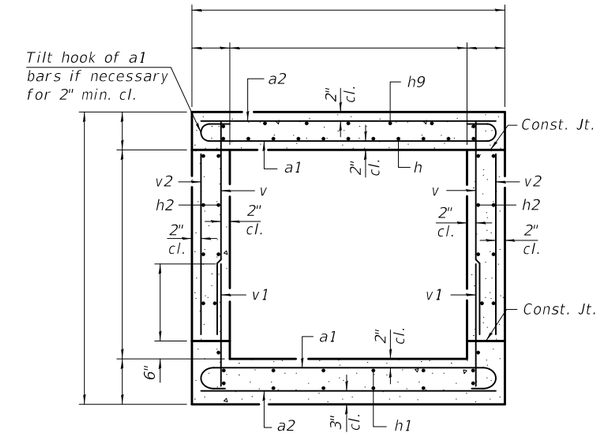

SECTION THRU BARREL

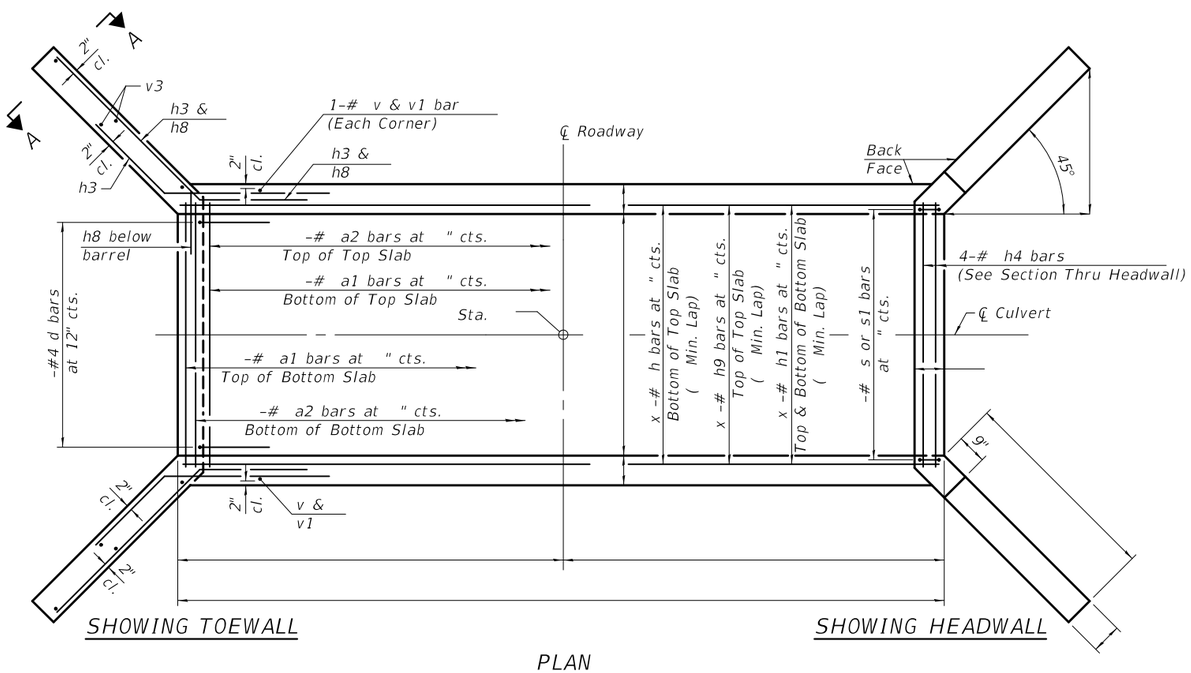

SHOWING TOEWALL

SHOWING HEADWALL

PLAN

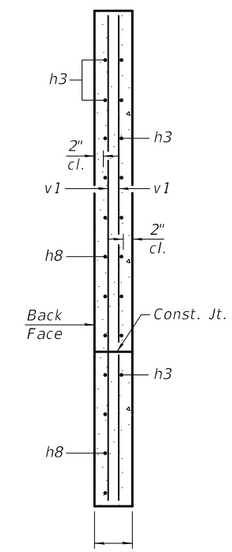

SECTION A-A

BILL OF MATERIAL

Bar	No.	Size	Length	Shape
a1		#		
a2		#		
d		#4	4'-5"	
h		#		
h1		#		
h2		#		
h3		#	8'-0"	
h4		#		
h8		#		
h9		#		
s		#		
s1		#		
v		#		
v1		#		
v2		#		
v3		#4		
Concrete Box Culverts			Cu. Yd.	
Reinforcement Bars			Pound	

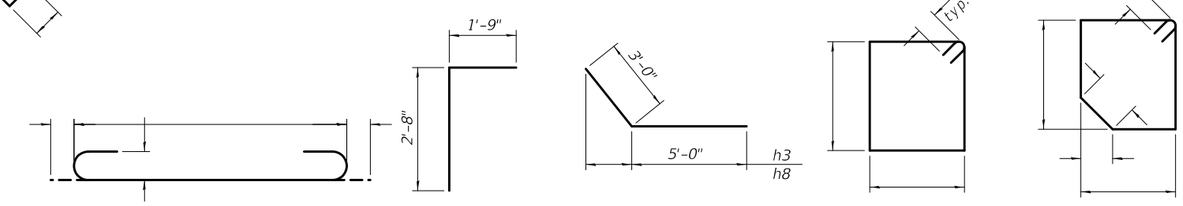

BAR a1 BAR d BARS h3 & h8 BAR s BAR s1

Notes:

A distance of half the length of the wingwall but not less than six feet of the barrel shall be poured monolithically with the wingwalls.

Bars indicated thus 12 x 4-#5 etc. indicates 12 lines of bars with 4 lengths per line.

At the Contractor's option, a longer v1 bar may be ordered to replace the v bar. No reduction in quantities shall be made for this substitution.

TSA-SC-HC-ZS 2-17-2017

FILE NAME =	USER NAME =	DESIGNED -	REVISED -	STATE OF ILLINOIS DEPARTMENT OF TRANSPORTATION	CULVERT DETAILS STRUCTURE NO.	F.A. RTE.	SECTION	COUNTY	TOTAL SHEETS	SHEET NO.
		CHECKED -	REVISED -							
	PLOT SCALE =	DRAWN -	REVISED -					CONTRACT NO.		
	PLOT DATE =	CHECKED -	REVISED -				ILLINOIS	FED. AID PROJECT		

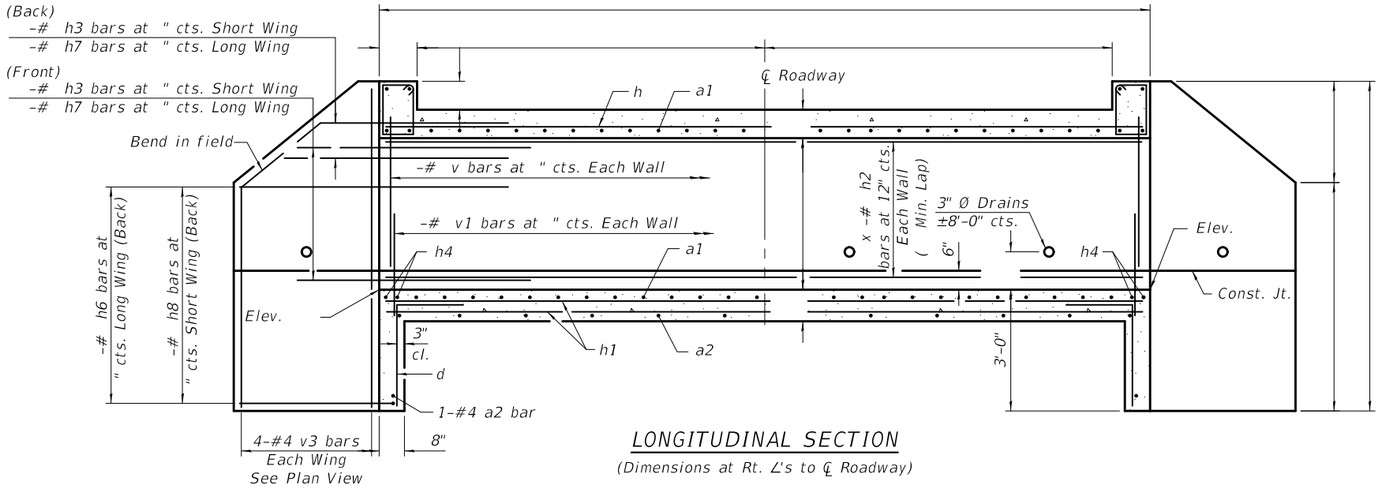

LONGITUDINAL SECTION

(Dimensions at Rt. ∠'s to ℄ Roadway)

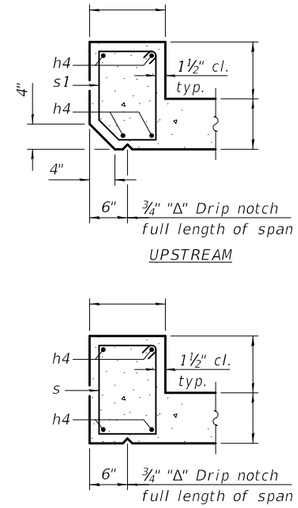

SECTION THRU HEADWALL

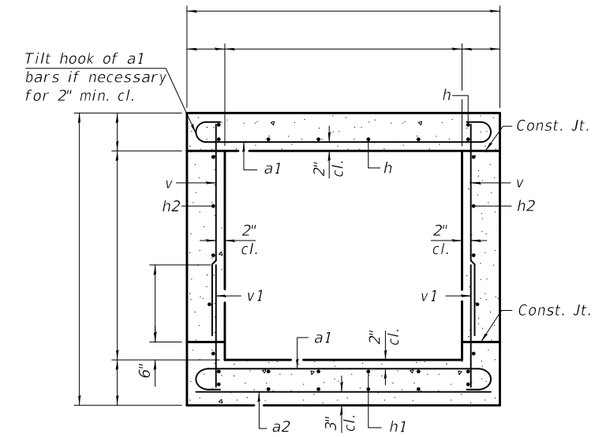

SECTION THRU BARREL

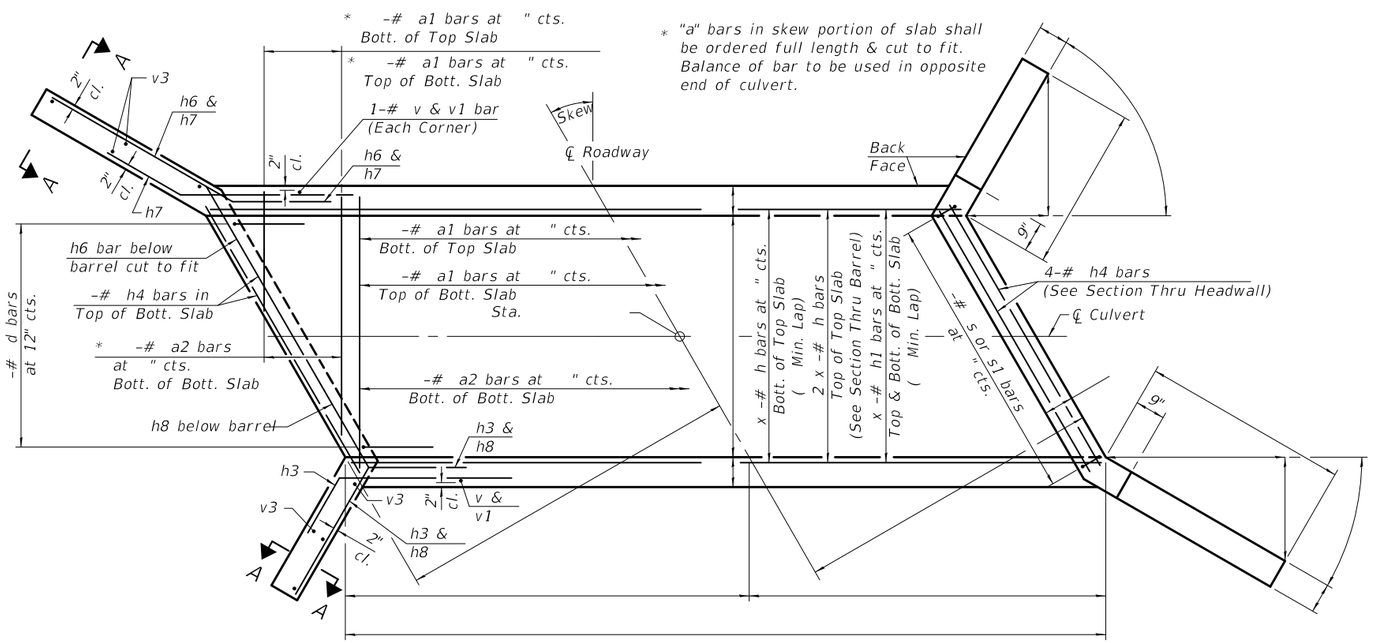

SHOWING TOEWALL

PLAN

SHOWING HEADWALL

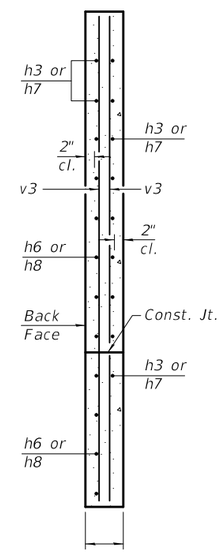

SECTION A-A

BILL OF MATERIAL

Bar	No.	Size	Length	Shape
a1		#		
a2		#		
d		#4	4'-5"	
h		#		
h1		#		
h2		#		
h3		#	8'-0"	
h4		#		
h6		#		
h7		#	8'-0"	
h8		#		
s		#		
s1		#		
v		#		
v1		#		
v3		#4		
Concrete Box Culverts			Cu. Yd.	
Reinforcement Bars			Pound	

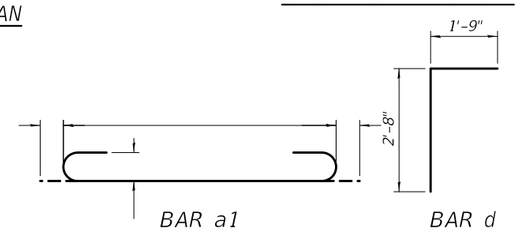

BAR a1 BAR d

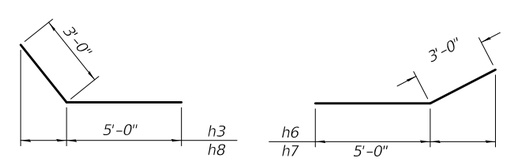

BARS h3 & h8 BARS h6 & h7

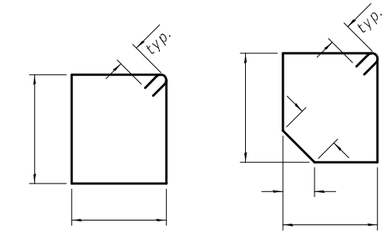

BAR s BAR s1

Notes:

A distance of half the length of the wingwall but not less than six feet of the barrel shall be poured monolithically with the wingwalls.

Bars indicated thus 12 x 4-#5 etc. indicates 12 lines of bars with 4 lengths per line.

At the Contractor's option, a longer v1 bar may be ordered to replace the v bar. No reduction in quantities shall be made for this substitution.

TSB-SB-HC-LS 2-17-2017

FILE NAME =	USER NAME =	DESIGNED -	REVISED -
		CHECKED -	REVISED -
	PLOT SCALE =	DRAWN -	REVISED -
	PLOT DATE =	CHECKED -	REVISED -

STATE OF ILLINOIS
DEPARTMENT OF TRANSPORTATION

CULVERT DETAILS
STRUCTURE NO.

F.A. RTE.	SECTION	COUNTY	TOTAL SHEETS	SHEET NO.
		CONTRACT NO.		
	ILLINOIS FED. AID PROJECT			

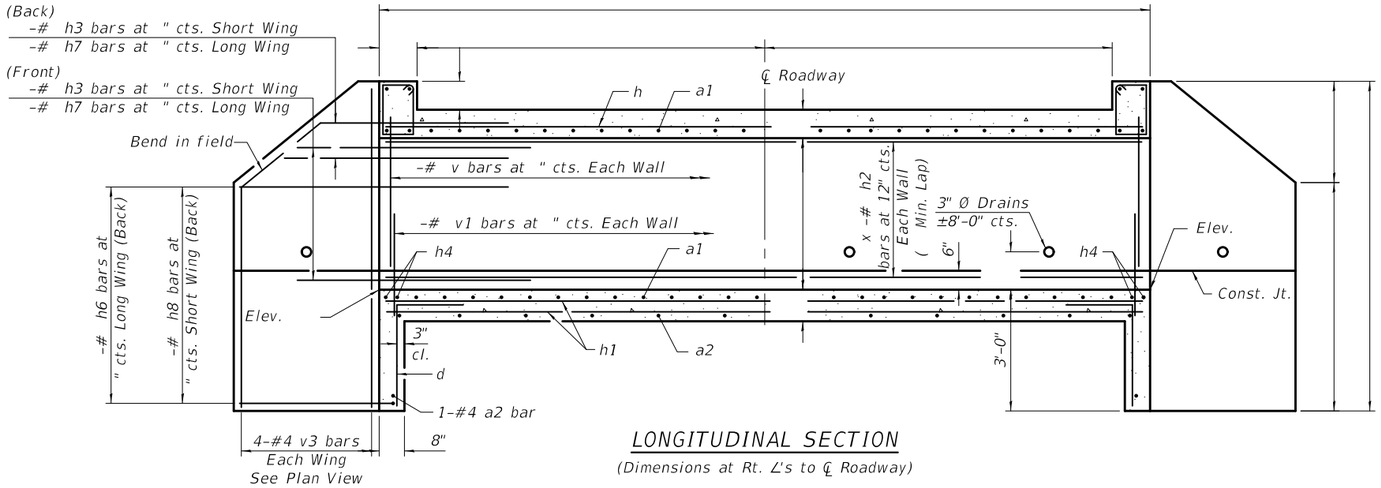

LONGITUDINAL SECTION

(Dimensions at Rt. ∠'s to ℄ Roadway)

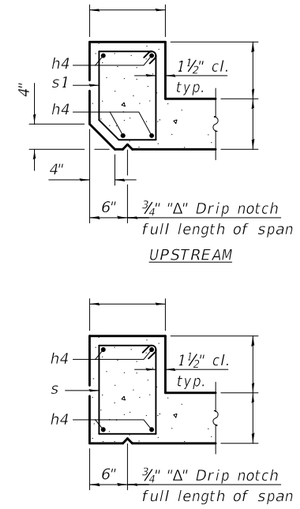

SECTION THRU HEADWALL

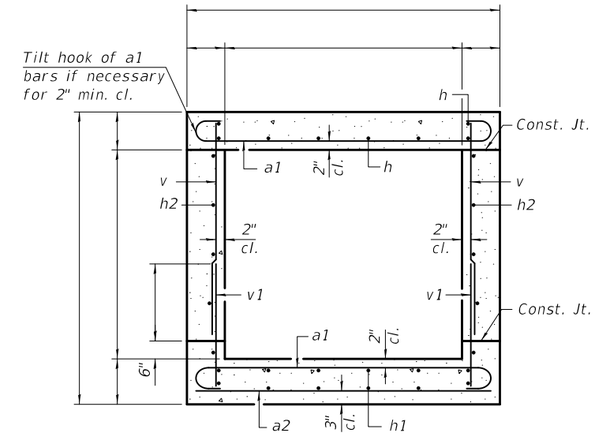

SECTION THRU BARREL

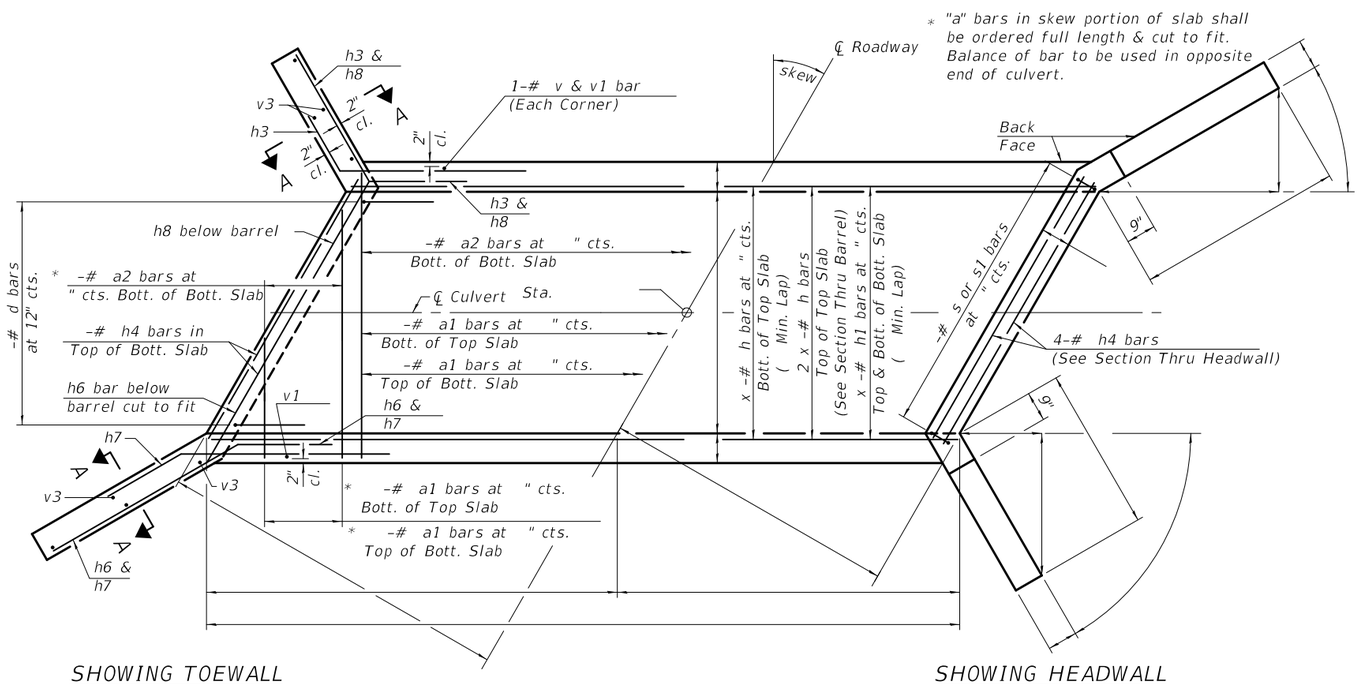

SHOWING TOEWALL

PLAN

SHOWING HEADWALL

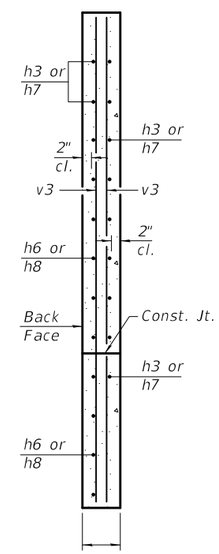

SECTION A-A

BILL OF MATERIAL

Bar	No.	Size	Length	Shape
a1		#		
a2		#		
d		#4	4'-5"	
h		#		
h1		#		
h2		#		
h3		#	8'-0"	
h4		#		
h6		#		
h7		#	8'-0"	
h8		#		
s		#		
s1		#		
v		#		
v1		#		
v3		#4		
Concrete Box Culverts			Cu. Yd.	
Reinforcement Bars			Pound	

Notes:

A distance of half the length of the wingwall but not less than six feet of the barrel shall be poured monolithically with the wingwalls.

Bars indicated thus 12 x 4-#5 etc. indicates 12 lines of bars with 4 lengths per line.

At the Contractor's option, a longer v1 bar may be ordered to replace the v bar. No reduction in quantities shall be made for this substitution.

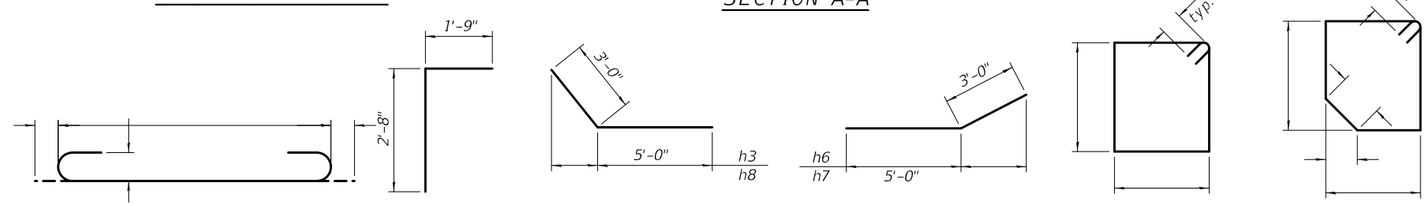

BAR a1 BAR d BARS h3 & h8 BARS h6 & h7 BAR s BAR s1

TSB-SB-HC-RS 2-17-2017

FILE NAME =	USER NAME =	DESIGNED -	REVISED -
		CHECKED -	REVISED -
	PLOT SCALE =	DRAWN -	REVISED -
	PLOT DATE =	CHECKED -	REVISED -

STATE OF ILLINOIS
DEPARTMENT OF TRANSPORTATION

CULVERT DETAILS
STRUCTURE NO.

F.A. RTE.	SECTION	COUNTY	TOTAL SHEETS	SHEET NO.
		CONTRACT NO.		
	ILLINOIS FED. AID PROJECT			

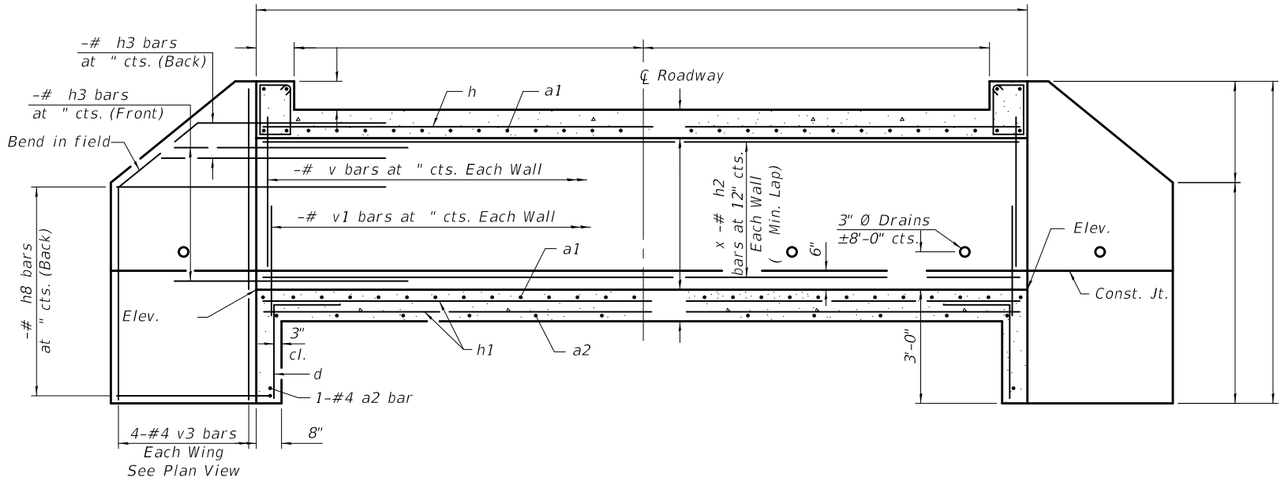

LONGITUDINAL SECTION

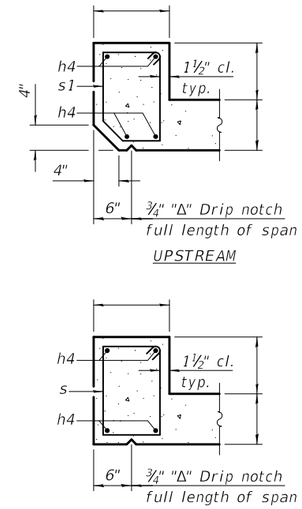

SECTION THRU HEADWALL

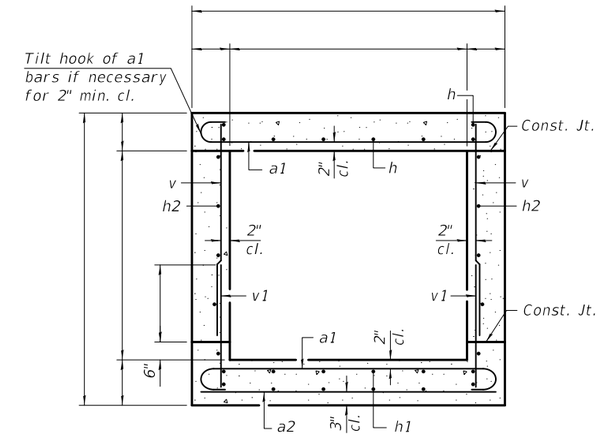

SECTION THRU BARREL

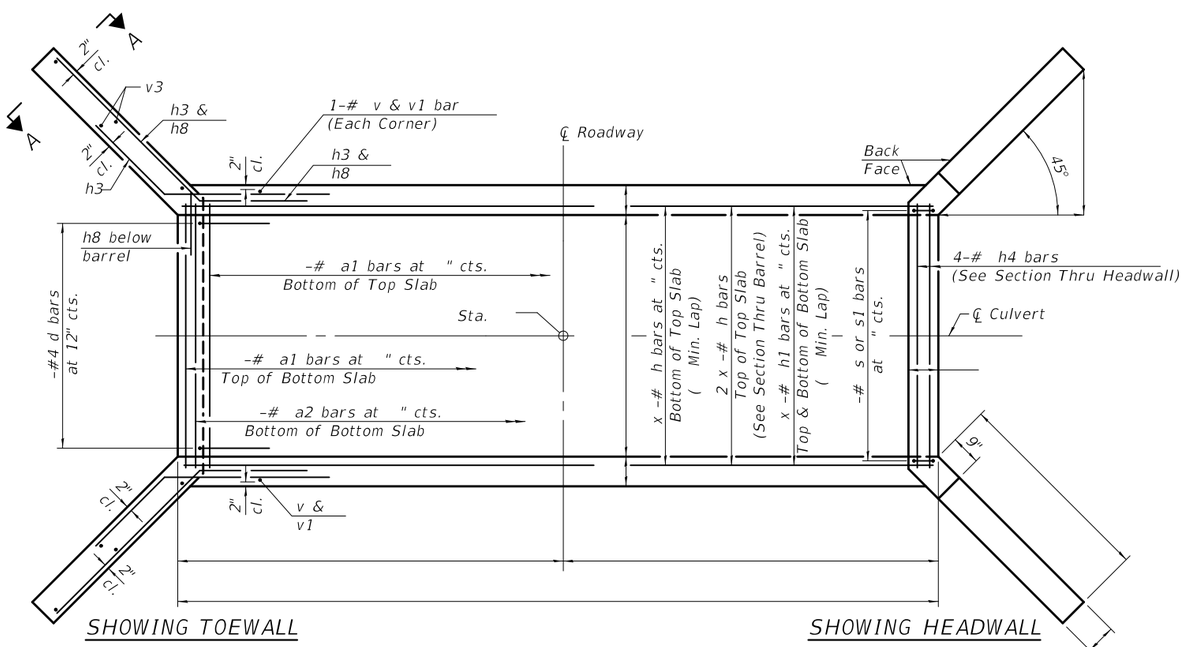

PLAN

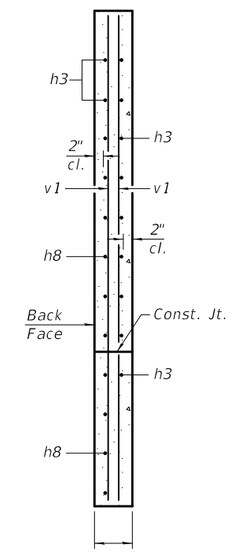

SECTION A-A

BILL OF MATERIAL

Bar	No.	Size	Length	Shape
a1		#		
a2		#		
d		#4	4'-5"	
h		#		
h1		#		
h2		#		
h3		#	8'-0"	
h4		#		
h8		#		
s		#		
s1		#		
v		#		
v1		#		
v3		#4		
Concrete Box Culverts			Cu. Yd.	
Reinforcement Bars			Pound	

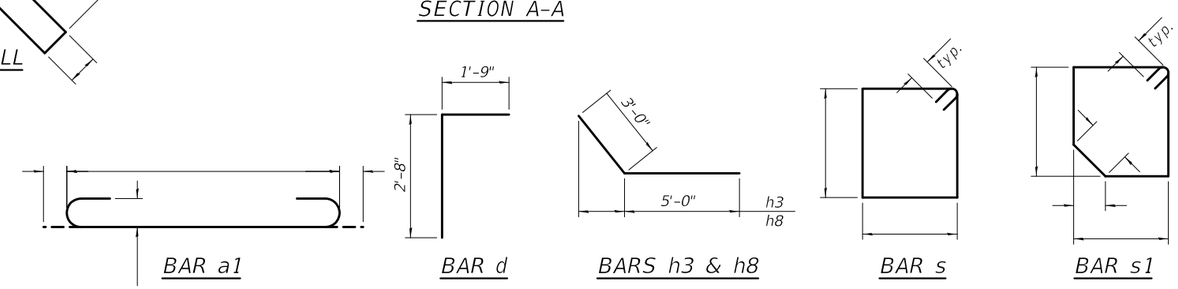

BAR a1 BAR d BARS h3 & h8 BAR s BAR s1

Notes:

A distance of half the length of the wingwall but not less than six feet of the barrel shall be poured monolithically with the wingwalls.

Bars indicated thus 12 x 4-#5 etc. indicates 12 lines of bars with 4 lengths per line.

At the Contractor's option, a longer v1 bar may be ordered to replace the v bar. No reduction in quantities shall be made for this substitution.

TSB-SB-HC-ZS 2-17-2017

FILE NAME =	USER NAME =	DESIGNED -	REVISED -
		CHECKED -	REVISED -
	PLOT SCALE =	DRAWN -	REVISED -
	PLOT DATE =	CHECKED -	REVISED -

STATE OF ILLINOIS
DEPARTMENT OF TRANSPORTATION

CULVERT DETAILS
STRUCTURE NO.

F.A. RTE.	SECTION	COUNTY	TOTAL SHEETS	SHEET NO.

CONTRACT NO.

ILLINOIS FED. AID PROJECT

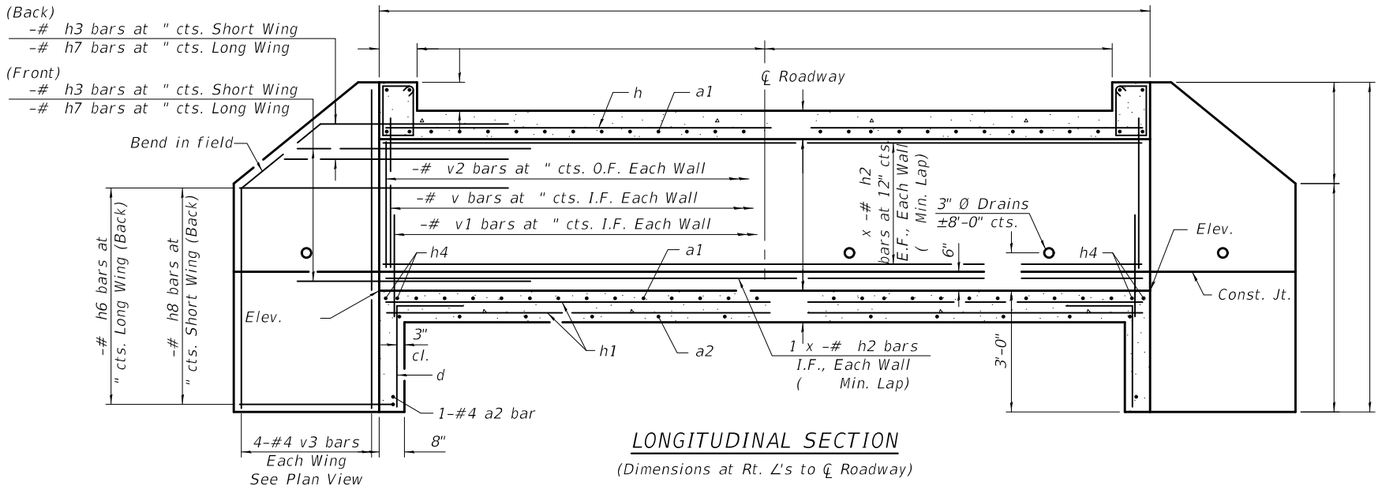

LONGITUDINAL SECTION

(Dimensions at Rt. ∠'s to ℄ Roadway)

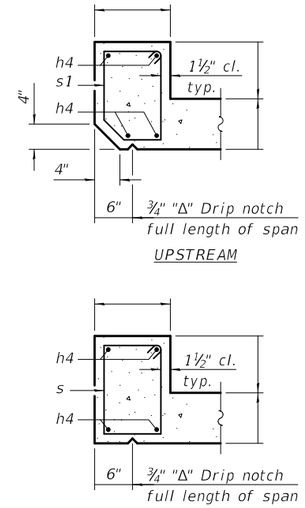

SECTION THRU HEADWALL

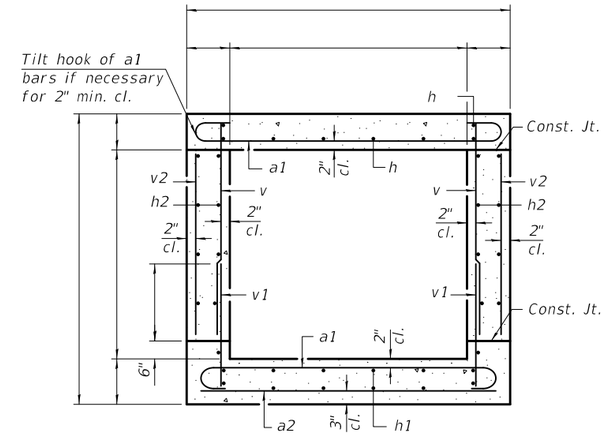

SECTION THRU BARREL

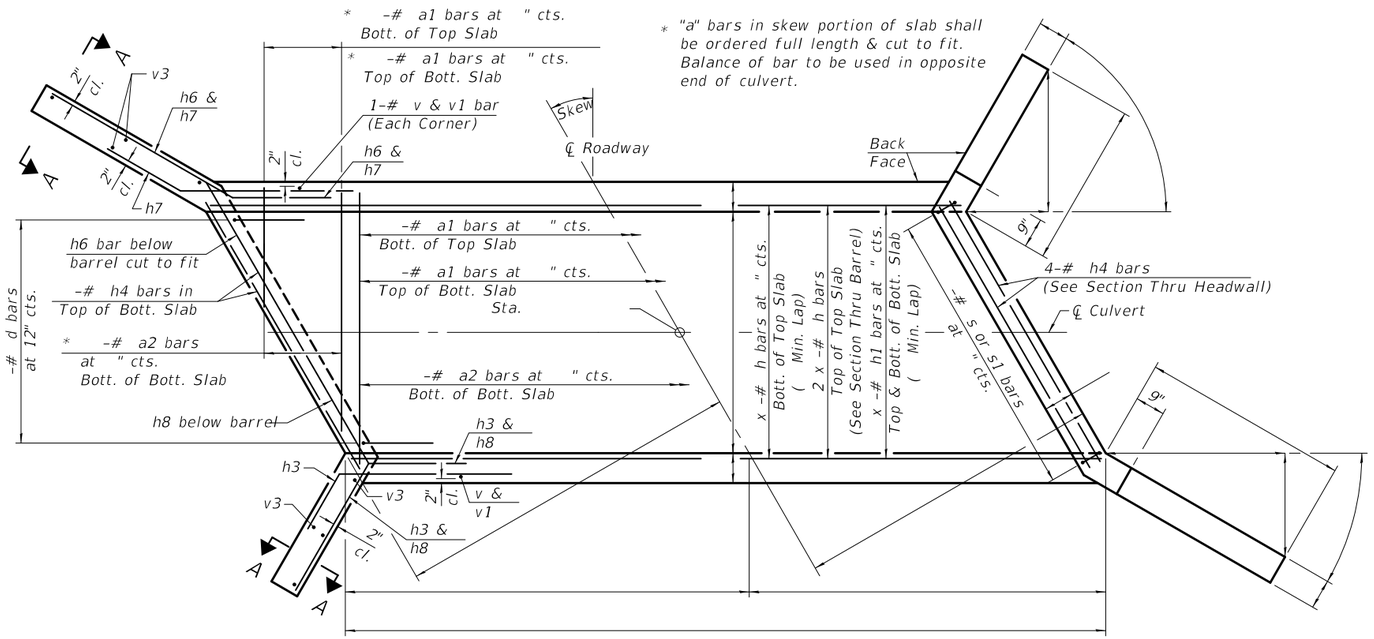

SHOWING TOEWALL

PLAN

SHOWING HEADWALL

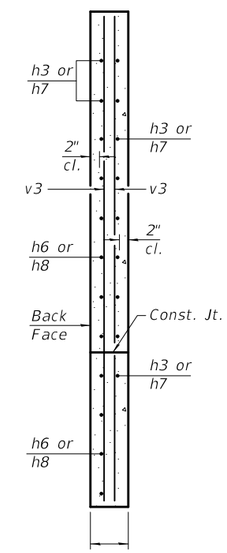

SECTION A-A

BILL OF MATERIAL

Bar	No.	Size	Length	Shape
a1		#		
a2		#		
d		#4	4'-5"	
h		#		
h1		#		
h2		#		
h4		#	8'-0"	
h4		#		
h6		#		
h7		#	8'-0"	
h8		#		
s		#		
s1		#		
v		#		
v1		#		
v2		#		
v3		#4		
Concrete Box Culverts			Cu. Yd.	
Reinforcement Bars			Pound	

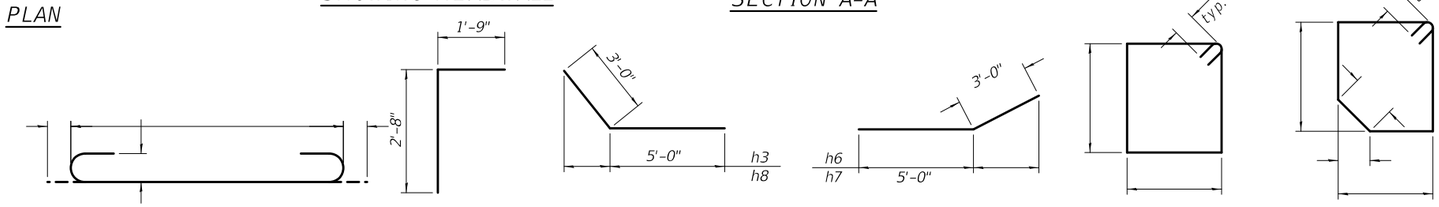

BAR a1 BAR d BARS h3 & h8 BARS h6 & h7 BAR s BAR s1

Notes:

A distance of half the length of the wingwall but not less than six feet of the barrel shall be poured monolithically with the wingwalls.

Bars indicated thus 12 x 4-#5 etc. indicates 12 lines of bars with 4 lengths per line.

At the Contractor's option, a longer v1 bar may be ordered to replace the v bar. No reduction in quantities shall be made for this substitution.

TSB-SC-HC-LS 2-17-2017

FILE NAME =	USER NAME =	DESIGNED -	REVISED -
		CHECKED -	REVISED -
	PLOT SCALE =	DRAWN -	REVISED -
	PLOT DATE =	CHECKED -	REVISED -

STATE OF ILLINOIS
DEPARTMENT OF TRANSPORTATION

CULVERT DETAILS
STRUCTURE NO.

F.A. RTE.	SECTION	COUNTY	TOTAL SHEETS	SHEET NO.
		CONTRACT NO.		
	ILLINOIS	FED. AID PROJECT		

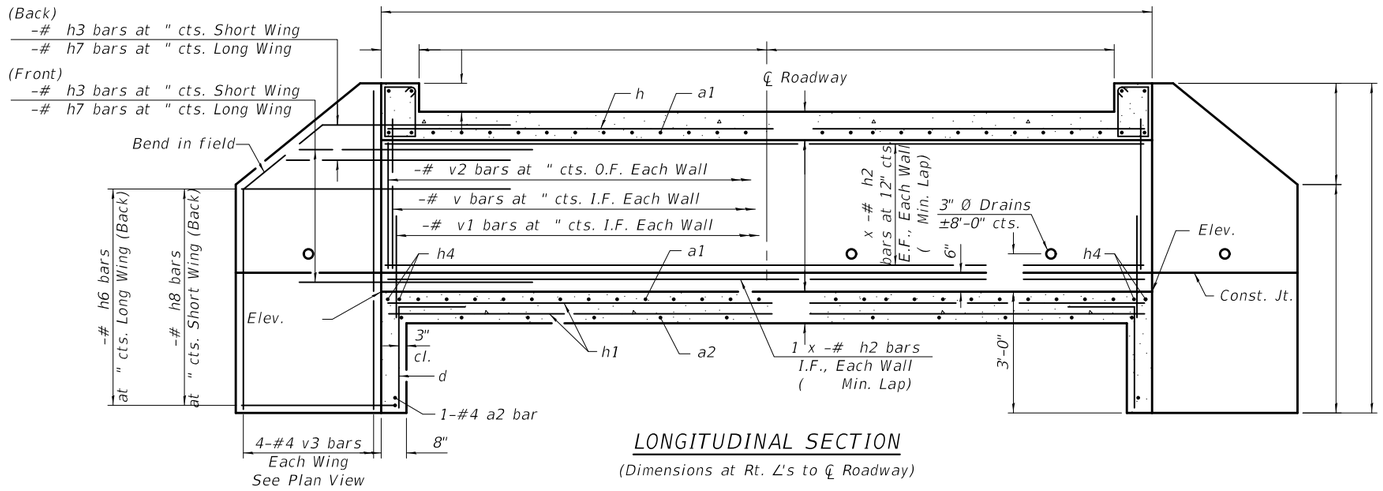

LONGITUDINAL SECTION

(Dimensions at Rt. ∠'s to ℄ Roadway)

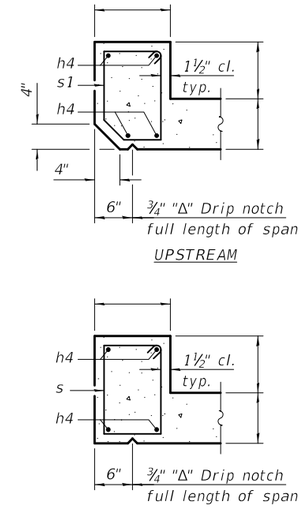

SECTION THRU HEADWALL

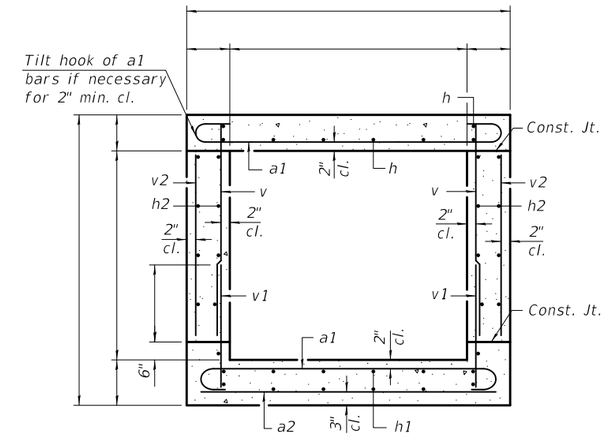

SECTION THRU BARREL

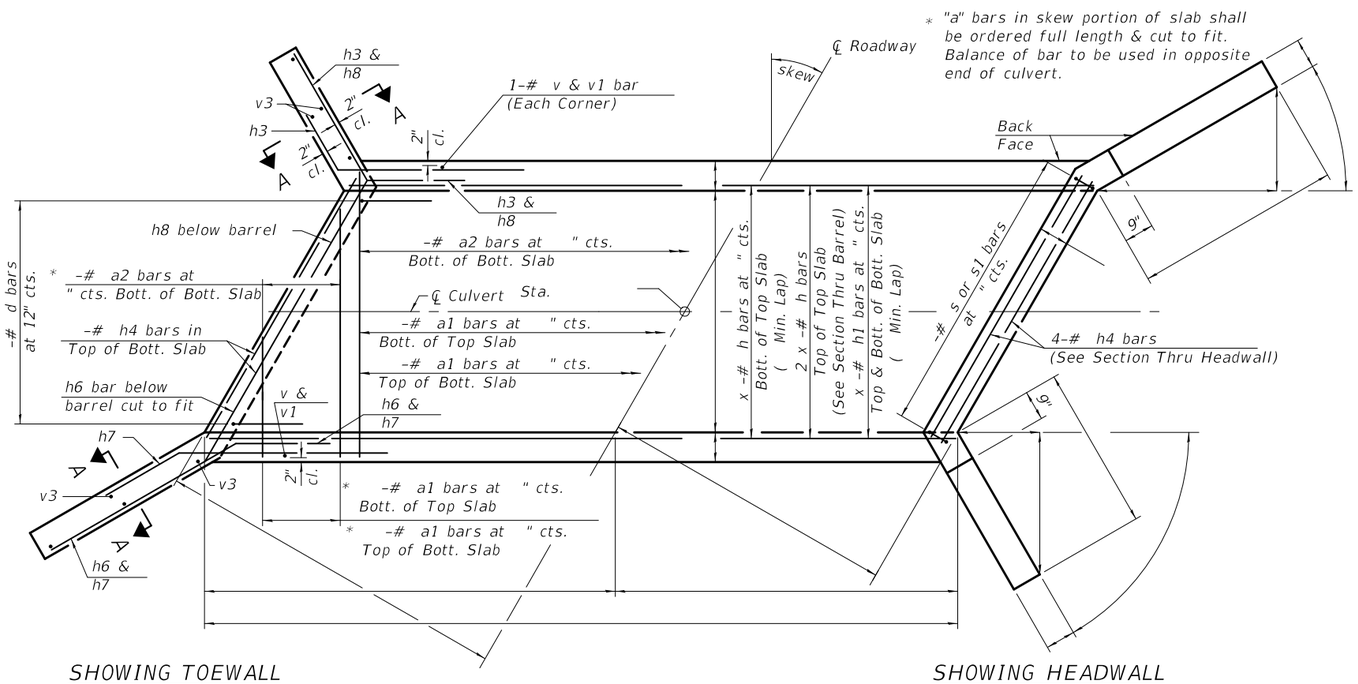

SHOWING TOEWALL

PLAN

SHOWING HEADWALL

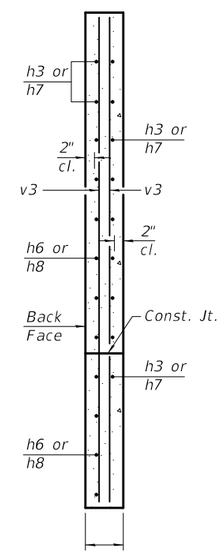

SECTION A-A

BILL OF MATERIAL

Bar	No.	Size	Length	Shape
a1		#		
a2		#		
d		#4	4'-5"	
h		#		
h1		#		
h2		#		
h3		#	8'-0"	
h4		#		
h6		#		
h7		#	8'-0"	
h8		#		
s		#		
s1		#		
v		#		
v1		#		
v2		#		
v3		#4		
Concrete Box Culverts			Cu. Yd.	
Reinforcement Bars				

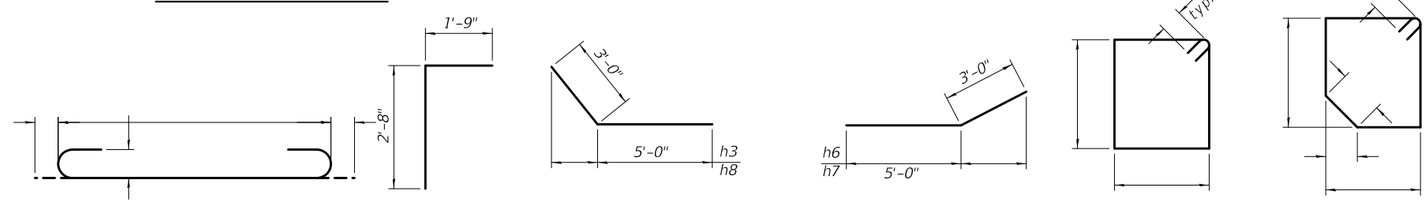

BAR a1 BAR d BARS h3 & h8 BARS h6 & h7 BAR s BAR s1

Notes:

A distance of half the length of the wingwall but not less than six feet of the barrel shall be poured monolithically with the wingwalls.

Bars indicated thus 12 x 4-#5 etc. indicates 12 lines of bars with 4 lengths per line.

At the Contractor's option, a longer v1 bar may be ordered to replace the v bar. No reduction in quantities shall be made for this substitution.

TSB-SC-HC-RS 2-17-2017

FILE NAME =	USER NAME =	DESIGNED -	REVISED -
		CHECKED -	REVISED -
	PLOT SCALE =	DRAWN -	REVISED -
	PLOT DATE =	CHECKED -	REVISED -

STATE OF ILLINOIS
DEPARTMENT OF TRANSPORTATION

CULVERT DETAILS
STRUCTURE NO.

F.A. RTE.	SECTION	COUNTY	TOTAL SHEETS	SHEET NO.
		CONTRACT NO.		
	ILLINOIS	FED. AID PROJECT		

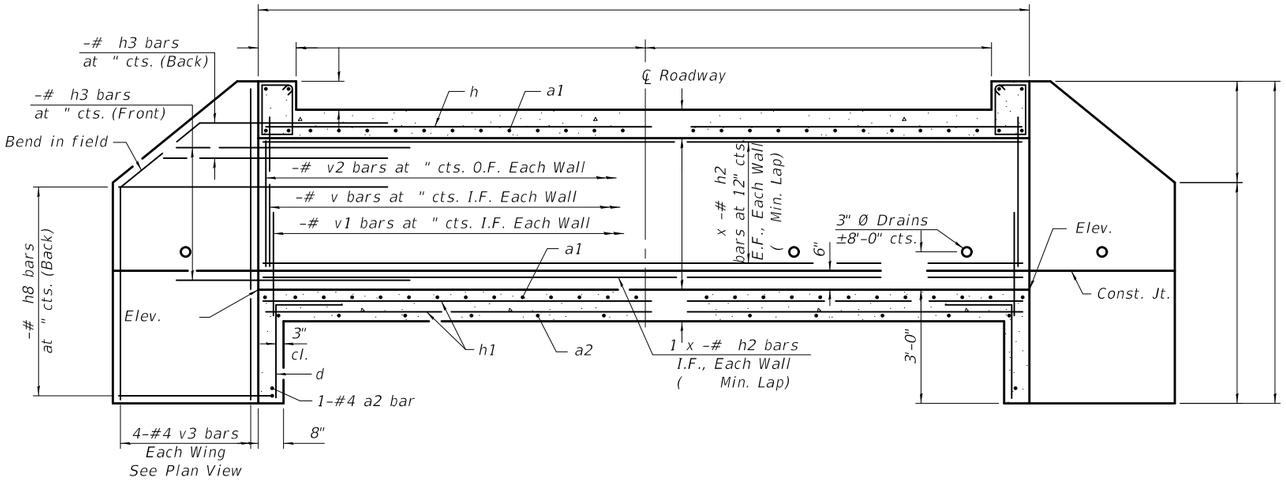

LONGITUDINAL SECTION

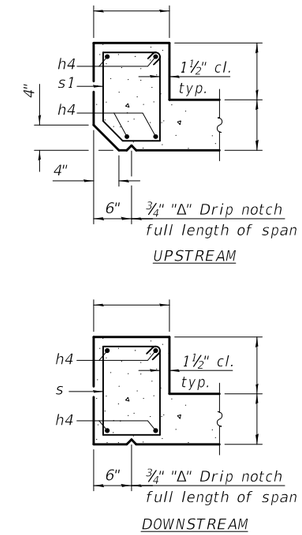

SECTION THRU HEADWALL

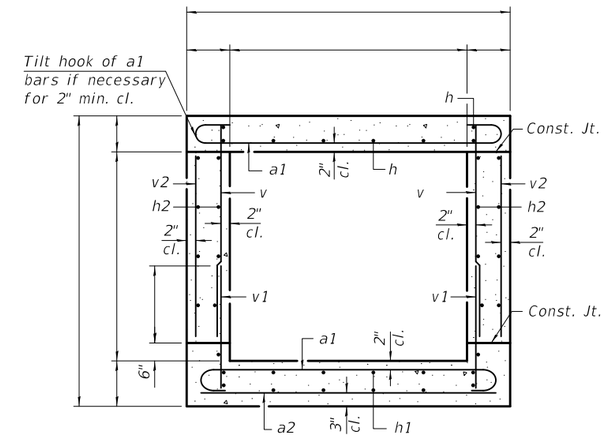

SECTION THRU BARREL

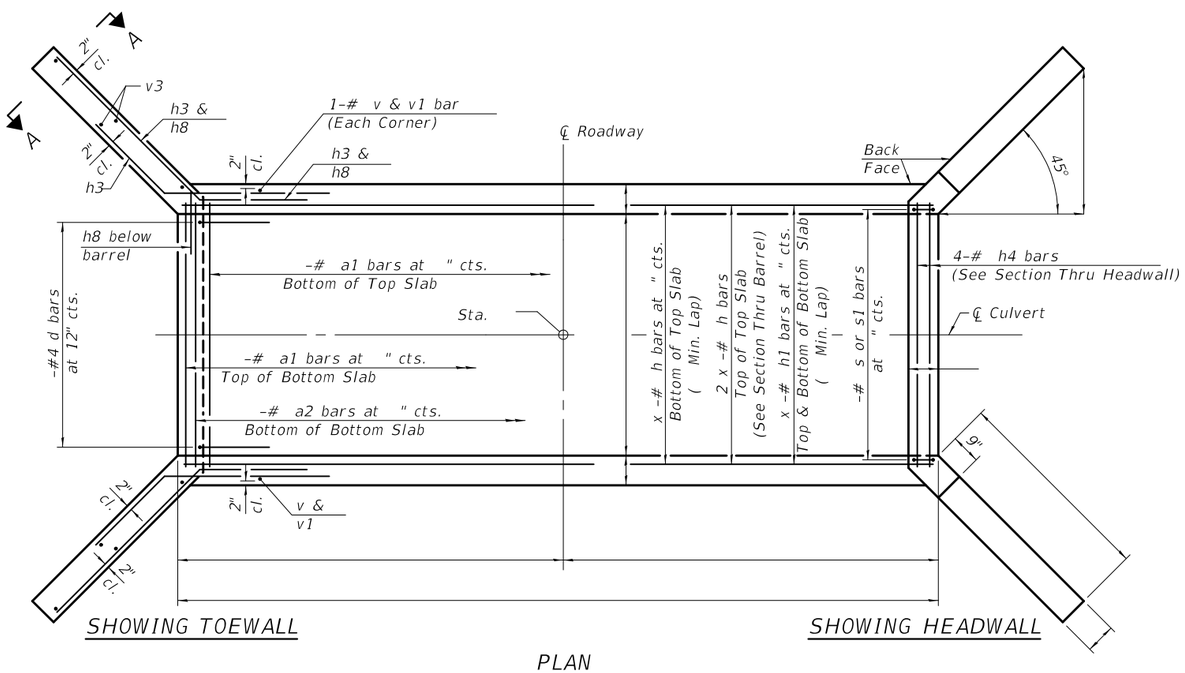

PLAN

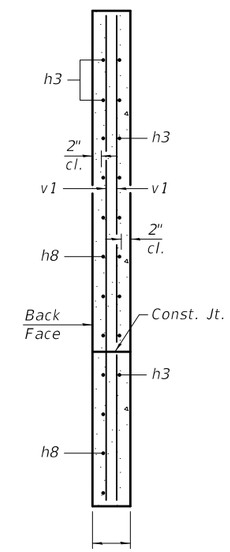

SECTION A-A

BILL OF MATERIAL

Bar	No.	Size	Length	Shape
a1		#		
a2		#		
d		#4	4'-5"	
h		#		
h1		#		
h2		#		
h3		#	8'-0"	
h4		#		
h8		#		
s		#		
s1		#		
v		#		
v1		#		
v2		#		
v3		#4		
Concrete Box Culverts			Cu. Yd.	
Reinforcement Bars			Pound	

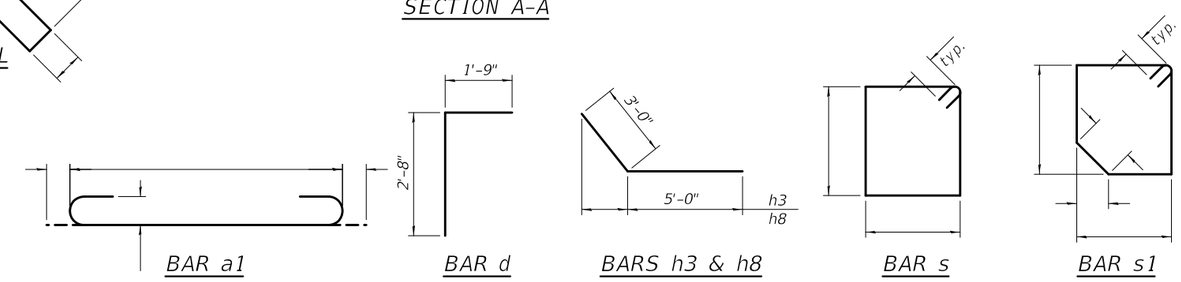

BAR a1 BAR d BARS h3 & h8 BAR s BAR s1

Notes:
A distance of half the length of the wingwall but not less than six feet of the barrel shall be poured monolithically with the wingwalls.
Bars indicated thus 12 x 4-#5 etc. indicates 12 lines of bars with 4 lengths per line.
At the Contractor's option, a longer v bar may be ordered to replace the v1 bar. No reduction in quantities shall be made for this substitution.

TSB-SC-HC-ZS 2-17-2017

FILE NAME =	USER NAME =	DESIGNED -	REVISED -	STATE OF ILLINOIS DEPARTMENT OF TRANSPORTATION	CULVERT DETAILS STRUCTURE NO.	F.A. RTE.	SECTION	COUNTY	TOTAL SHEETS	SHEET NO.
		CHECKED -	REVISED -							
	PLOT SCALE =	DRAWN -	REVISED -					CONTRACT NO.		
	PLOT DATE =	CHECKED -	REVISED -				ILLINOIS	FED. AID PROJECT		