CELL / MODEL NAME	DESCRIPTION	DATE
TSA-SB-PSSP-LS	2 rows of reinf in top slab; 1 row of reinf in each sidewall; Permanent Steel Sheet Pile Wingwalls, Left Skew	2/17/2017
TSA-SB-PSSP-RS	2 rows of reinf in top slab; 1 row of reinf in each sidewall; Permanent Steel Sheet Pile Wingwalls, Right Skew	2/17/2017
TSA-SB-PSSP-ZS	2 rows of reinf in top slab; 1 row of reinf in each sidewall; Permanent Steel Sheet Pile Wingwalls, Zero Skew	2/17/2017
TSA-SC-PSSP-LS	2 rows of reinf in top slab; 2 rows of reinf in each sidewall; Permanent Steel Sheet Pile Wingwalls, Left Skew	2/17/2017
TSA-SC-PSSP-RS	2 rows of reinf in top slab; 2 rows of reinf in each sidewall; Permanent Steel Sheet Pile Wingwalls, Right Skew	2/17/2017
TSA-SC-PSSP-ZS	2 rows of reinf in top slab; 2 rows of reinf in each sidewall; Permanent Steel Sheet Pile Wingwalls, Zero Skew	2/17/2017
TSB-SB-PSSP-LS	1 row of reinf in top slab; 1 row of reinf in each sidewall; Permanent Steel Sheet Pile Wingwalls, Left Skew	2/17/2017
TSB-SB-PSSP-RS	1 row of reinf in top slab; 1 row of reinf in each sidewall; Permanent Steel Sheet Pile Wingwalls, Right Skew	2/17/2017
TSB-SB-PSSP-ZS	1 row of reinf in top slab; 1 row of reinf in each sidewall; Permanent Steel Sheet Pile Wingwalls, Zero Skew	2/17/2017
TSB-SC-PSSP-LS	1 row of reinf in top slab; 2 rows of reinf in each sidewall; Permanent Steel Sheet Pile Wingwalls, Left Skew	2/17/2017
TSB-SC-PSSP-RS	1 row of reinf in top slab; 2 rows of reinf in each sidewall; Permanent Steel Sheet Pile Wingwalls, Right Skew	2/17/2017
TSB-SC-PSSP-ZS	1 row of reinf in top slab; 2 rows of reinf in each sidewall; Permanent Steel Sheet Pile Wingwalls, Zero Skew	2/17/2017

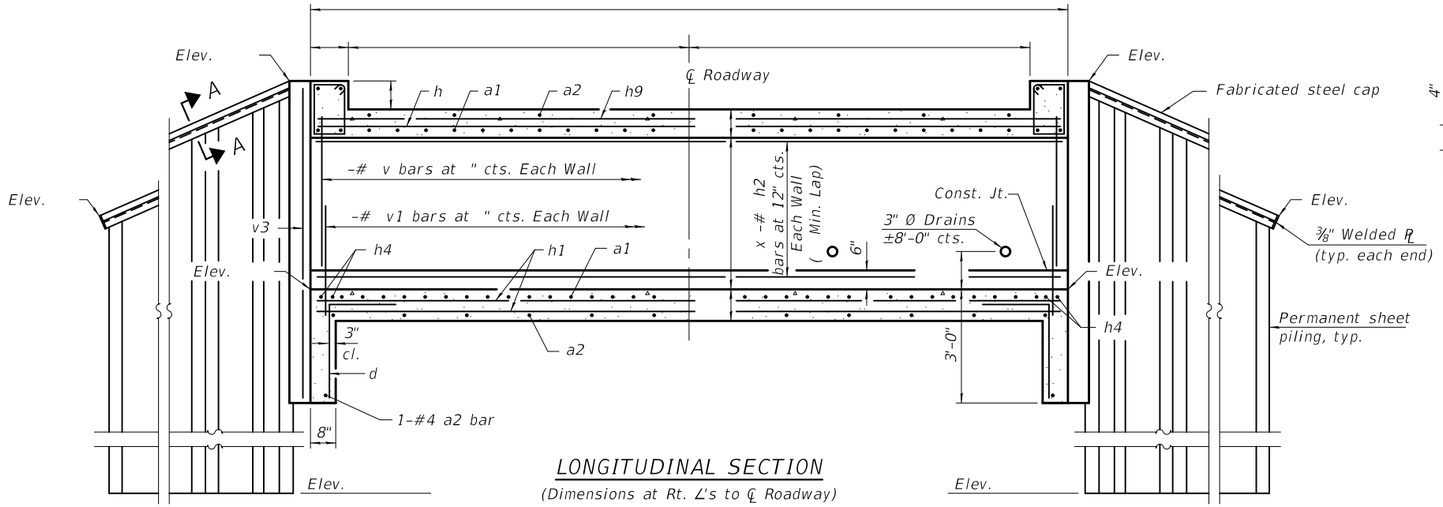

LONGITUDINAL SECTION

(Dimensions at Rt. ∠'s to ℄ Roadway)

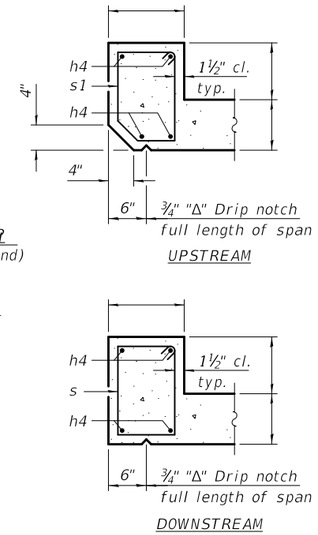

SECTION THRU HEADWALL

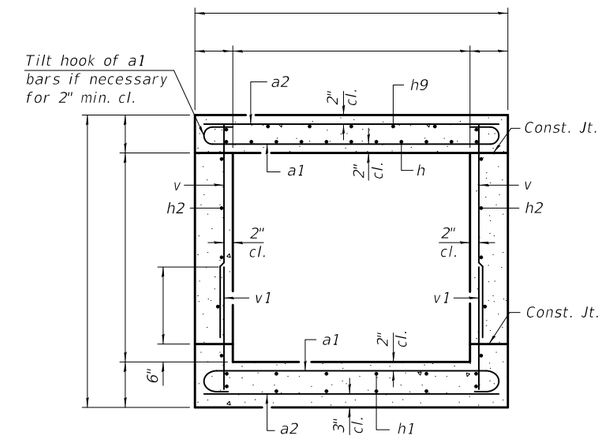

SECTION THRU BARREL

BILL OF MATERIAL

Bar	No.	Size	Length	Shape
a1		#		
a2		#		
d		#4	4'-5"	
h		#		
h1		#		
h2		#		
h4		#		
h9		#		
s		#		
s1		#		
v		#		
v1		#		
v3		#		
Concrete Box Culverts			Cu. Yd.	
Reinforcement Bars			Pound	
Permanent Sheet Piling			Sq. Ft.	

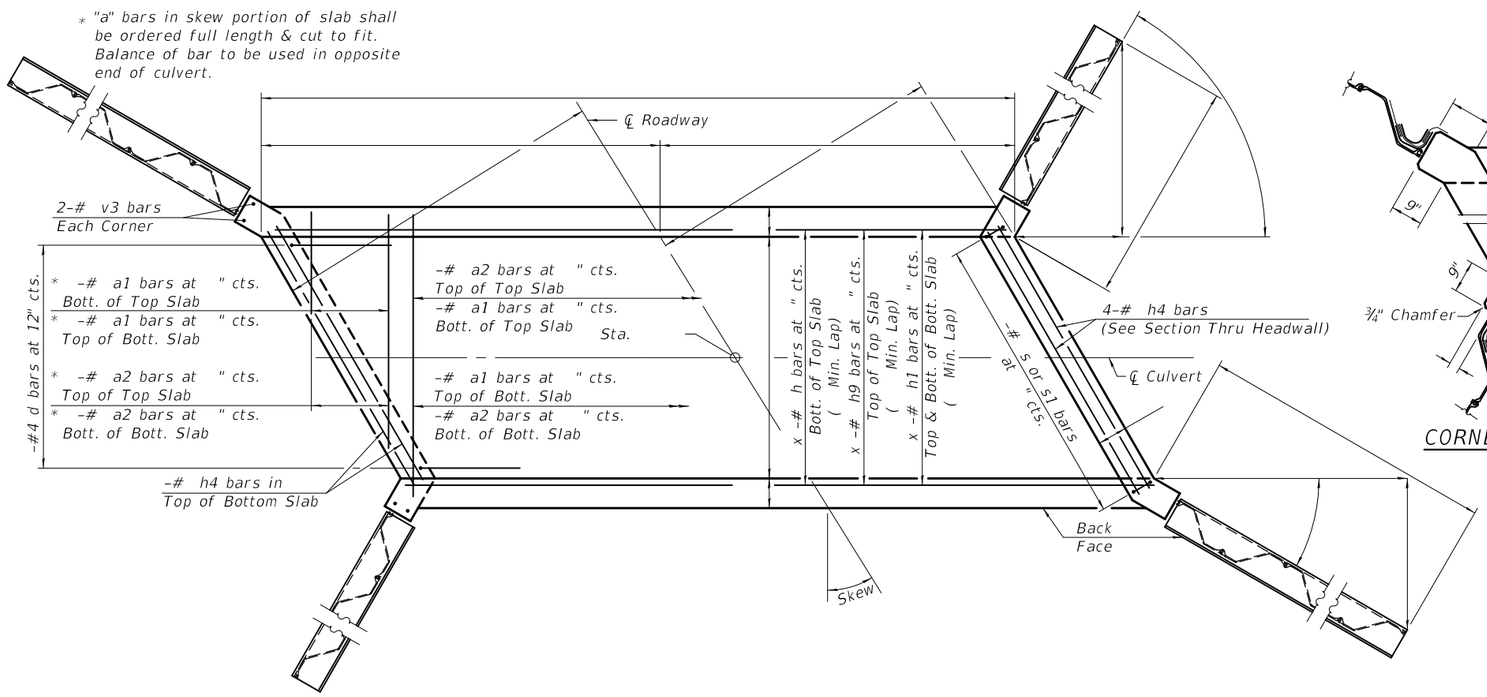

SHOWING TOEWALL

PLAN

SHOWING HEADWALL

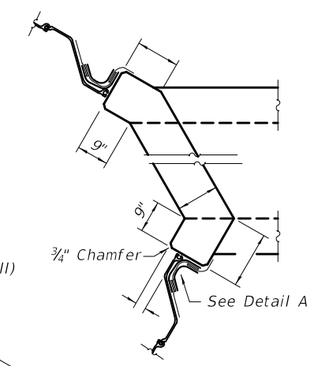

CORNER DETAIL

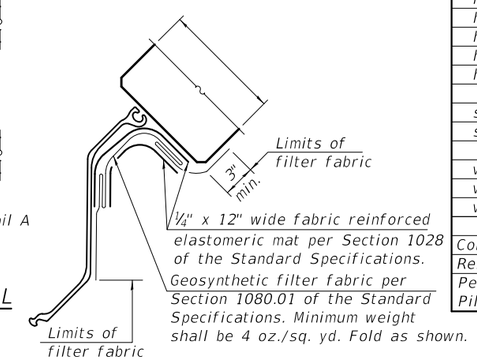

DETAIL A

Notes:

Bars indicated thus 12 x 4-#5 etc. indicates 12 lines of bars with 4 lengths per line.

At the Contractor's option, a longer v1 bar may be ordered to replace the v bar. No reduction in quantities shall be made for this substitution.

The minimum effective section modulus of the permanent steel sheet pile wall shall be in.^{3}/ft.

Sheet piling shall not be driven until the concrete strength has attained a minimum flexural strength of 650 psi or a minimum compressive strength of 3500 psi.

The cost of furnishing and installing the fabricated steel cap, elastomeric mat, and filter fabric shall be included in the cost of Permanent Sheet Piling.

BAR a1

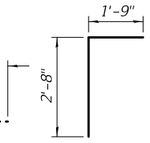

BAR d

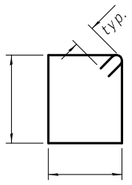

BAR s

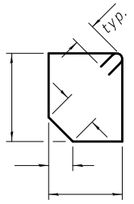

BAR s1

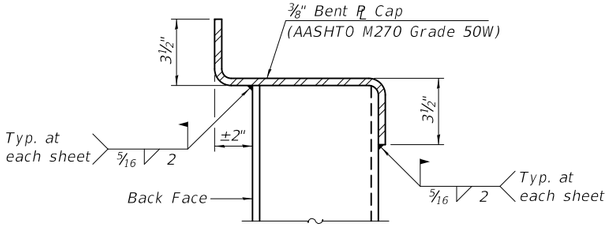

SECTION A-A

TSA-SB-PSSP-LS 2-17-2017

FILE NAME =	USER NAME =	DESIGNED -	REVISED -	STATE OF ILLINOIS DEPARTMENT OF TRANSPORTATION	CULVERT DETAILS STRUCTURE NO.	F.A. RTE.	SECTION	COUNTY	TOTAL SHEETS	SHEET NO.
		CHECKED -	REVISED -							
	PLOT SCALE =	DRAWN -	REVISED -					CONTRACT NO.		
	PLOT DATE =	CHECKED -	REVISED -				ILLINOIS	FED. AID PROJECT		

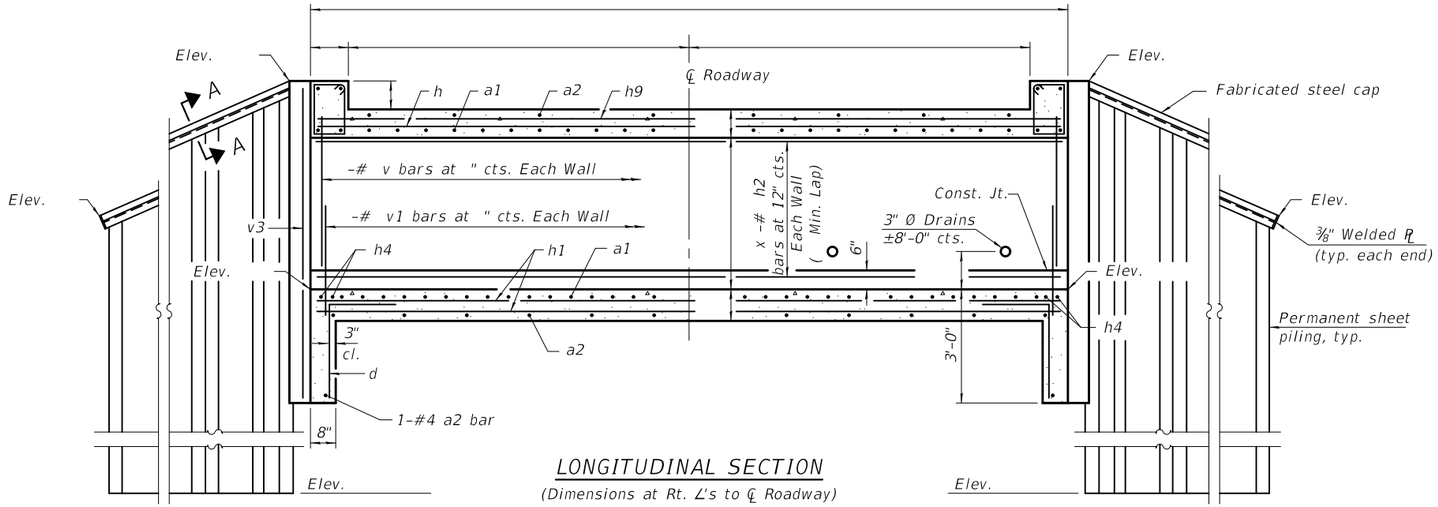

LONGITUDINAL SECTION

(Dimensions at Rt. ∠'s to ℄ Roadway)

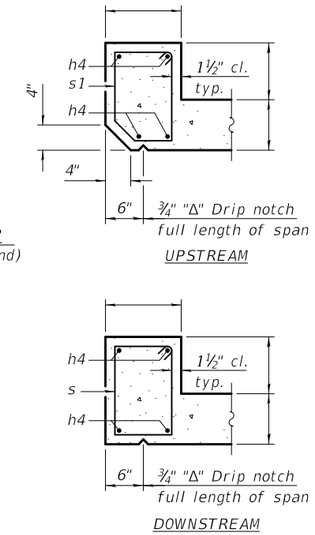

SECTION THRU HEADWALL

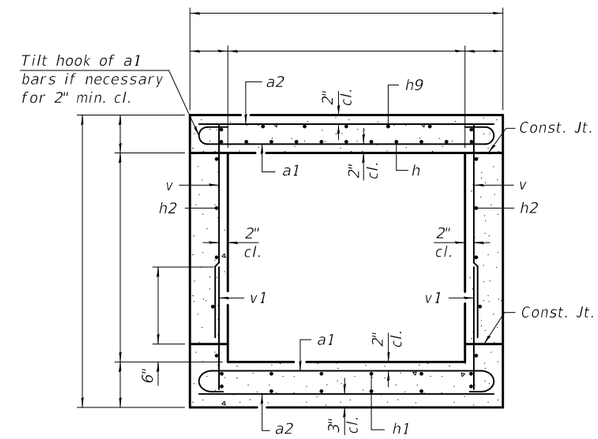

SECTION THRU BARREL

BILL OF MATERIAL

Bar	No.	Size	Length	Shape
a1		#		
a2		#		
d		#4	4'-5"	
h		#		
h1		#		
h2		#		
h4		#		
h9		#		
s		#		
s1		#		
v		#		
v1		#		
v3		#		
Concrete Box Culverts			Cu. Yd.	
Reinforcement Bars			Pound	
Permanent Sheet Piling			Sq. Ft.	

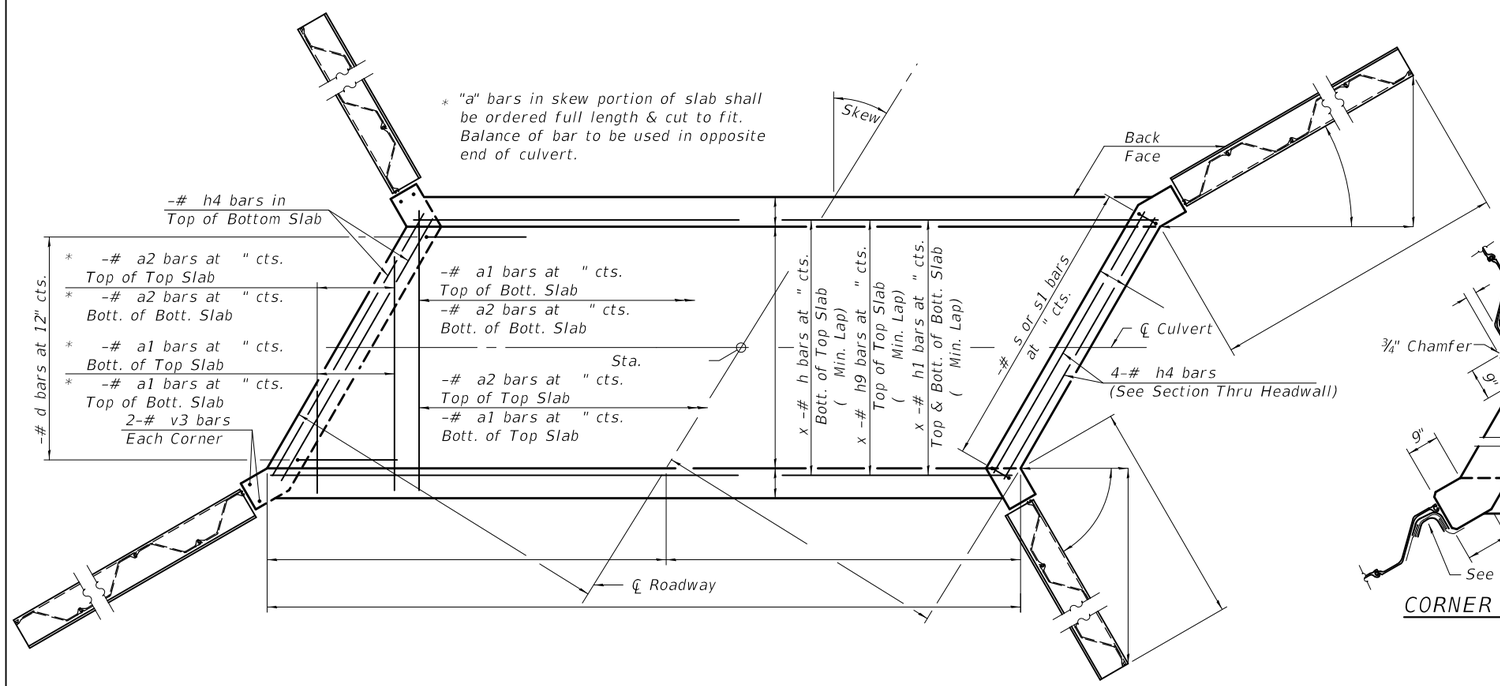

SHOWING TOEWALL PLAN

SHOWING HEADWALL

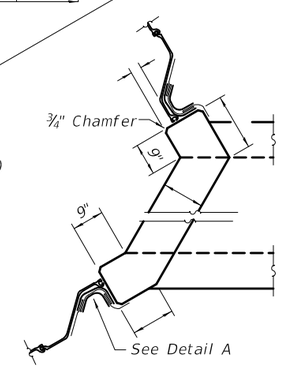

CORNER DETAIL

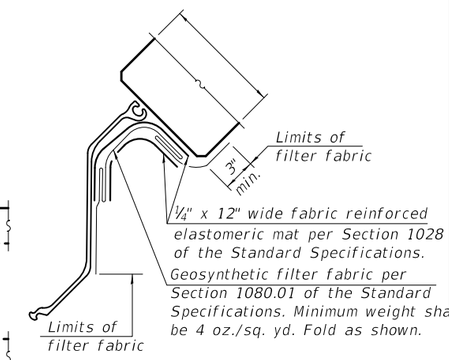

DETAIL A

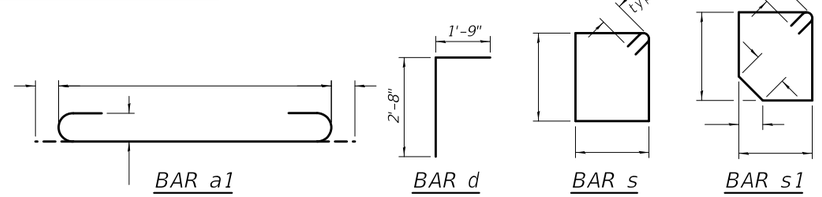

BAR a1 BAR d BAR s BAR s1

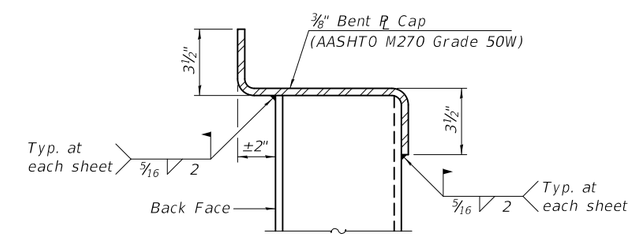

SECTION A-A

Notes:

Bars indicated thus 12 x 4-#5 etc. indicates 12 lines of bars with 4 lengths per line.

At the Contractor's option, a longer v1 bar may be ordered to replace the v bar. No reduction in quantities shall be made for this substitution.

The minimum effective section modulus of the permanent steel sheet pile wall shall be in.³/ft.

Sheet piling shall not be driven until the concrete strength has attained a minimum flexural strength of 650 psi or a minimum compressive strength of 3500 psi.

The cost of furnishing and installing the fabricated steel cap, elastomeric mat, and filter fabric shall be included in the cost of Permanent Sheet Piling.

TSA-SB-PSSP-RS 2-17-2017

FILE NAME =	USER NAME =	DESIGNED -	REVISED -
		CHECKED -	REVISED -
	PLOT SCALE =	DRAWN -	REVISED -
	PLOT DATE =	CHECKED -	REVISED -

STATE OF ILLINOIS
DEPARTMENT OF TRANSPORTATION

CULVERT DETAILS
STRUCTURE NO.

F.A. RTE.	SECTION	COUNTY	TOTAL SHEETS	SHEET NO.

CONTRACT NO.

ILLINOIS FED. AID PROJECT

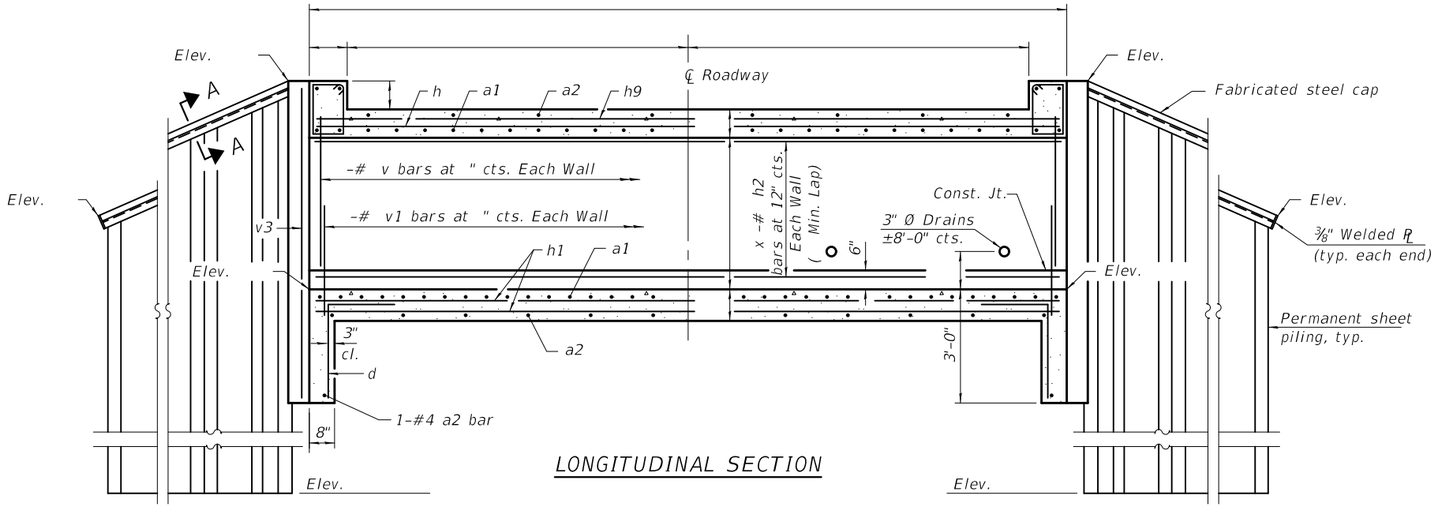

LONGITUDINAL SECTION

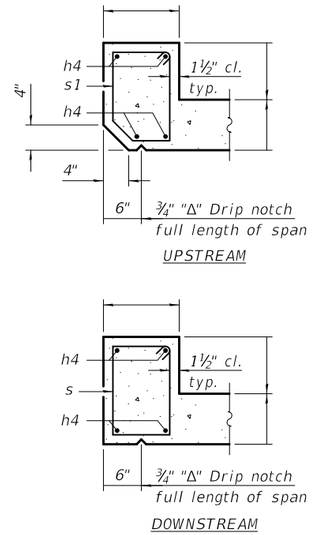

SECTION THRU HEADWALL

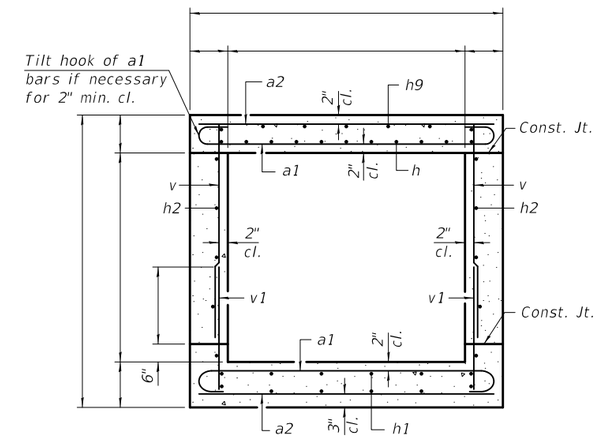

SECTION THRU BARREL

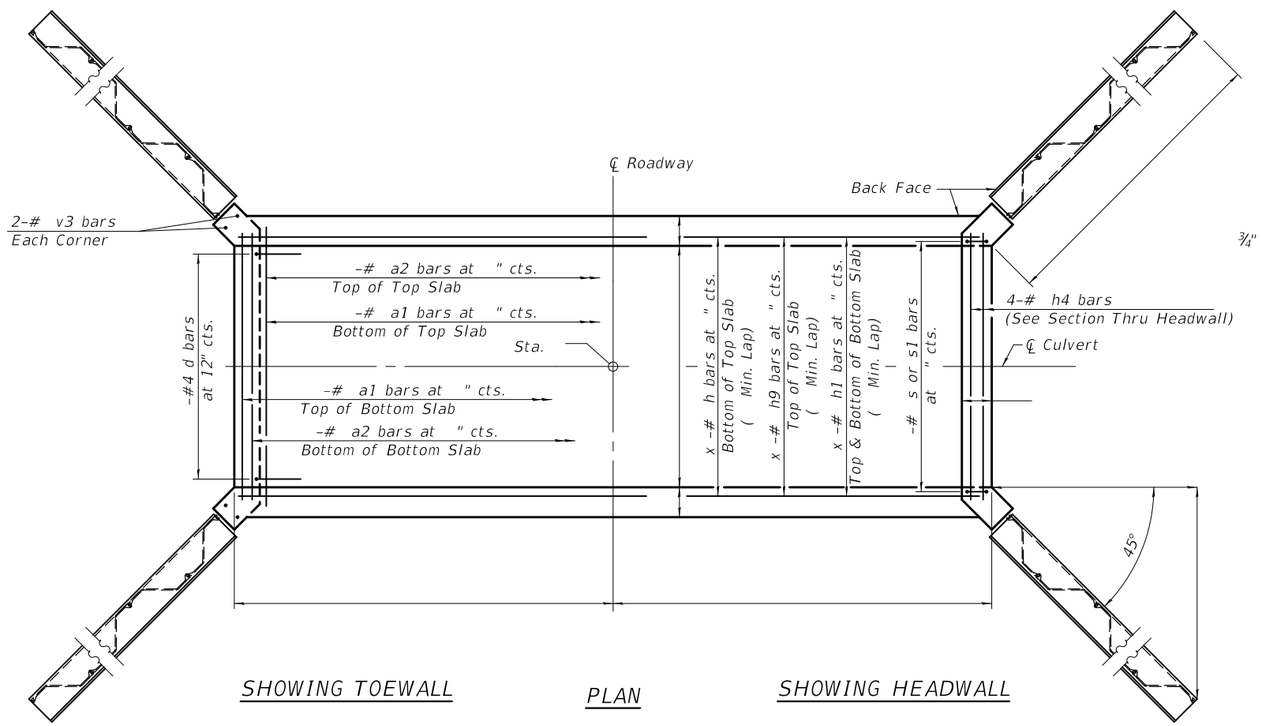

SHOWING TOEWALL

PLAN

SHOWING HEADWALL

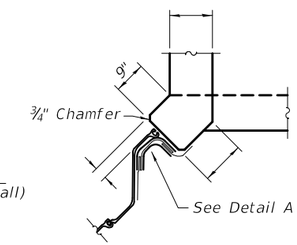

CORNER DETAIL

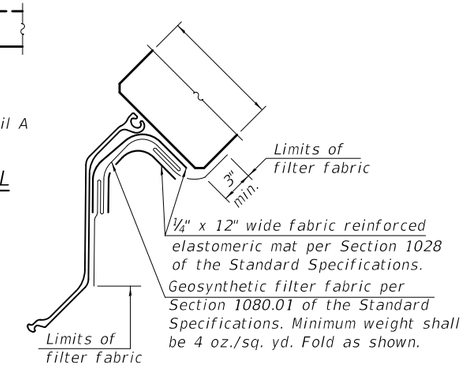

DETAIL A

BILL OF MATERIAL

Bar	No.	Size	Length	Shape
a1		#		
a2		#		
d		#4	4'-5"	
h		#		
h1		#		
h2		#		
h4		#		
h9		#		
s		#		
s1		#		
v		#		
v1		#		
v3		#		
Concrete Box Culverts			Cu. Yd.	
Reinforcement Bars			Pound	
Permanent Sheet Piling			Sq. Ft.	

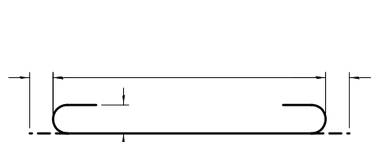

BAR a1

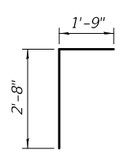

BAR d

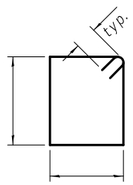

BAR s

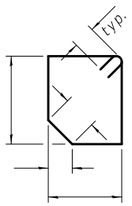

BAR s1

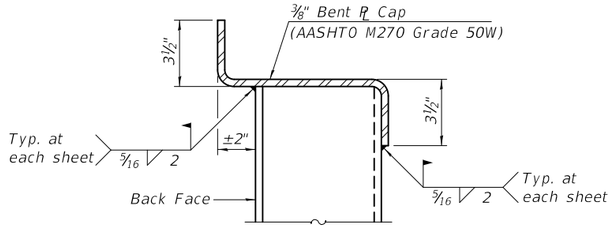

SECTION A-A

Notes:

Bars indicated thus 12 x 4-#5 etc. indicates 12 lines of bars with 4 lengths per line.

At the Contractor's option, a longer v1 bar may be ordered to replace the v bar. No reduction in quantities shall be made for this substitution.

The minimum effective section modulus of the permanent steel sheet pile wall shall be in.³/ft.

Sheet piling shall not be driven until the concrete strength has attained a minimum flexural strength of 650 psi or a minimum compressive strength of 3500 psi.

The cost of furnishing and installing the fabricated steel cap, elastomeric mat, and filter fabric shall be included in the cost of Permanent Sheet Piling.

TSA-SB-PSSP-ZS 2-17-2017

FILE NAME =	USER NAME =	DESIGNED -	REVISED -	STATE OF ILLINOIS DEPARTMENT OF TRANSPORTATION	CULVERT DETAILS STRUCTURE NO.	F.A. RTE.	SECTION	COUNTY	TOTAL SHEETS	SHEET NO.
		CHECKED -	REVISED -							
	PLOT SCALE =	DRAWN -	REVISED -					CONTRACT NO.		
	PLOT DATE =	CHECKED -	REVISED -				ILLINOIS	FED. AID PROJECT		

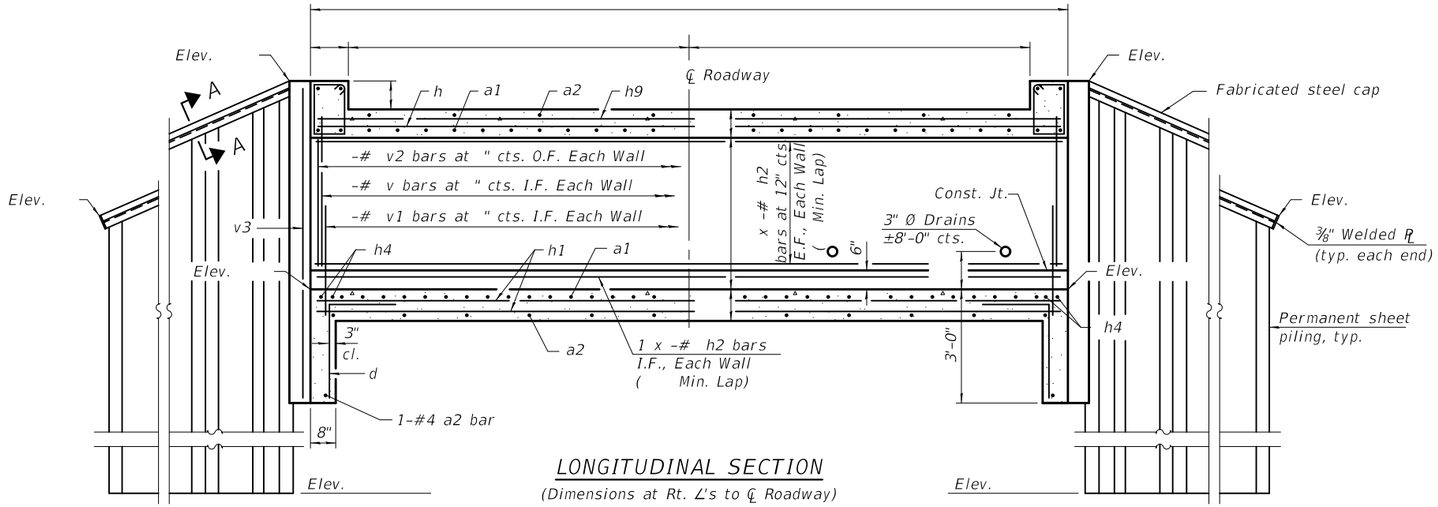

LONGITUDINAL SECTION

(Dimensions at Rt. ∠'s to ℄ Roadway)

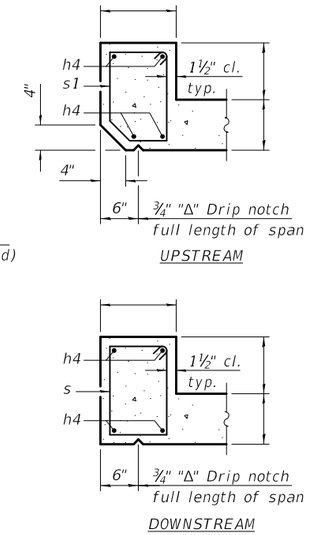

SECTION THRU HEADWALL

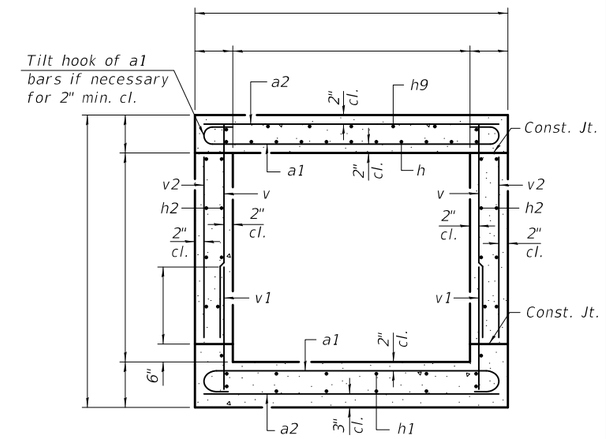

SECTION THRU BARREL

BILL OF MATERIAL

Bar	No.	Size	Length	Shape
a1		#		
a2		#		
d		#4	4'-5"	
h		#		
h1		#		
h2		#		
h4		#		
h9		#		
s		#		
s1		#		
v		#		
v1		#		
v2		#		
v3		#		
Concrete Box Culverts			Cu. Yd.	
Reinforcement Bars			Pound	
Permanent Sheet Piling			Sq. Ft.	

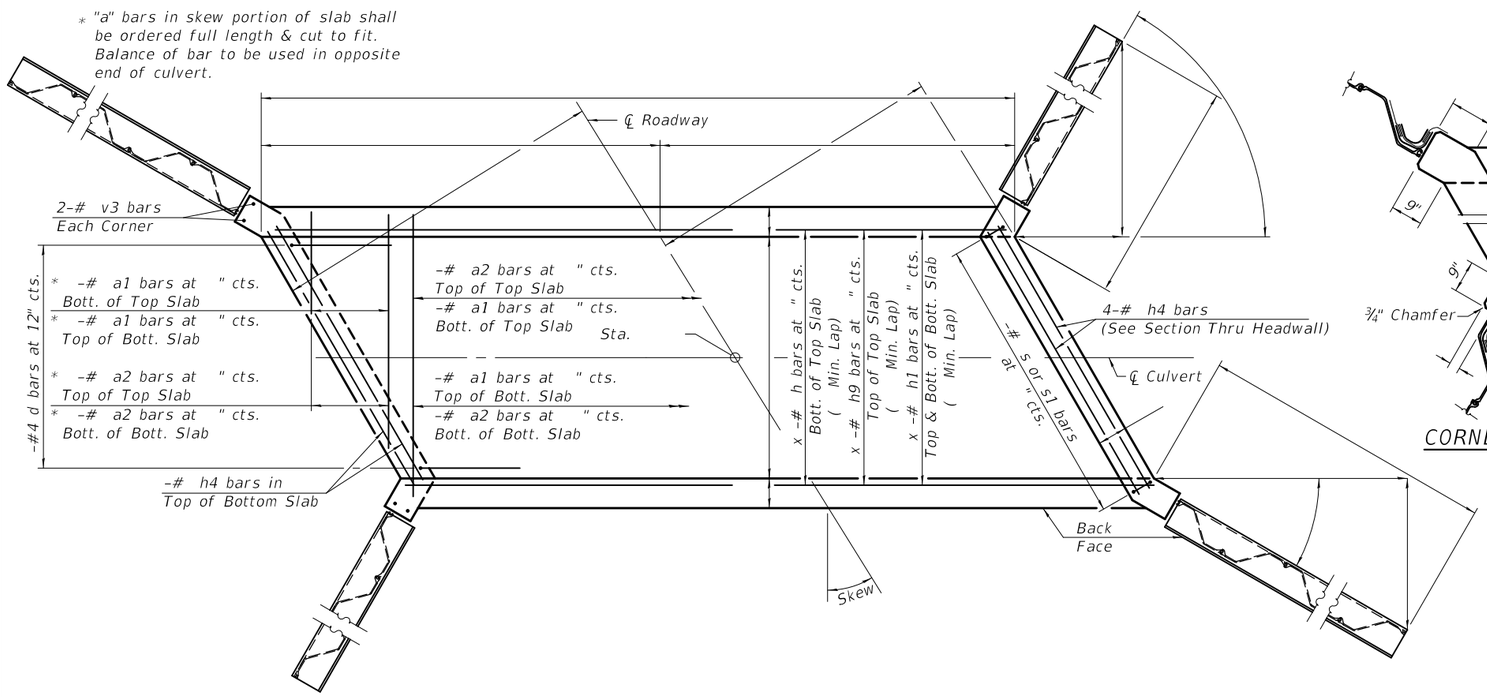

SHOWING TOEWALL

PLAN

SHOWING HEADWALL

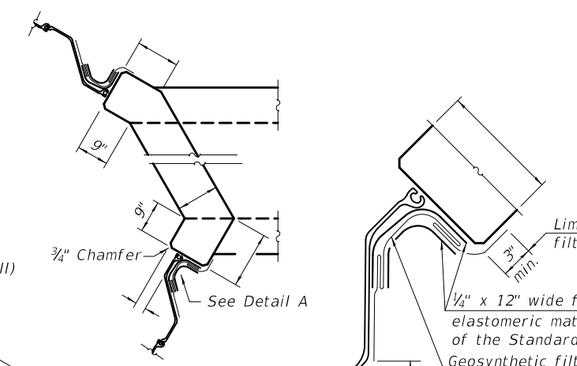

CORNER DETAIL

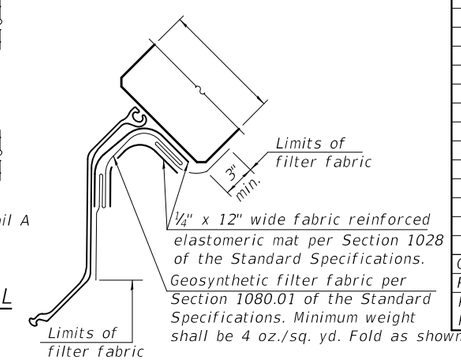

DETAIL A

Notes:

Bars indicated thus 12 x 4-#5 etc. indicates 12 lines of bars with 4 lengths per line.

At the Contractor's option, a longer v1 bar may be ordered to replace the v bar. No reduction in quantities shall be made for this substitution.

The minimum effective section modulus of the permanent steel sheet pile wall shall be in.³/ft.

Sheet piling shall not be driven until the concrete strength has attained a minimum flexural strength of 650 psi or a minimum compressive strength of 3500 psi.

The cost of furnishing and installing the fabricated steel cap, elastomeric mat, and filter fabric shall be included in the cost of Permanent Sheet Piling.

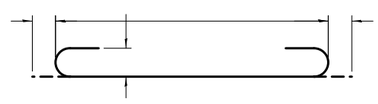

BAR a1

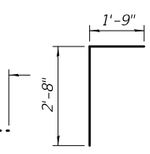

BAR d

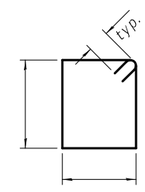

BAR s

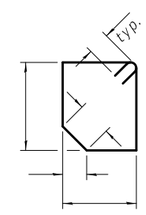

BAR s1

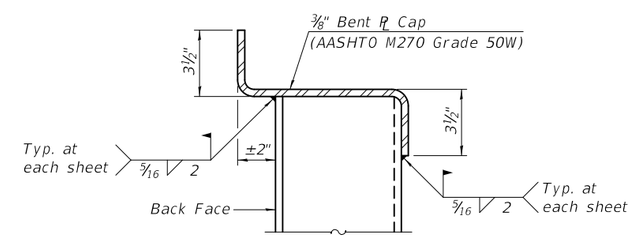

SECTION A-A

TSA-SC-PSSP-LS 2-17-2017

FILE NAME =	USER NAME =	DESIGNED -	REVISED -	STATE OF ILLINOIS DEPARTMENT OF TRANSPORTATION	CULVERT DETAILS STRUCTURE NO.	F.A. RTE.	SECTION	COUNTY	TOTAL SHEETS	SHEET NO.
		CHECKED -	REVISED -							
	PLOT SCALE =	DRAWN -	REVISED -					CONTRACT NO.		
	PLOT DATE =	CHECKED -	REVISED -				ILLINOIS	FED. AID PROJECT		

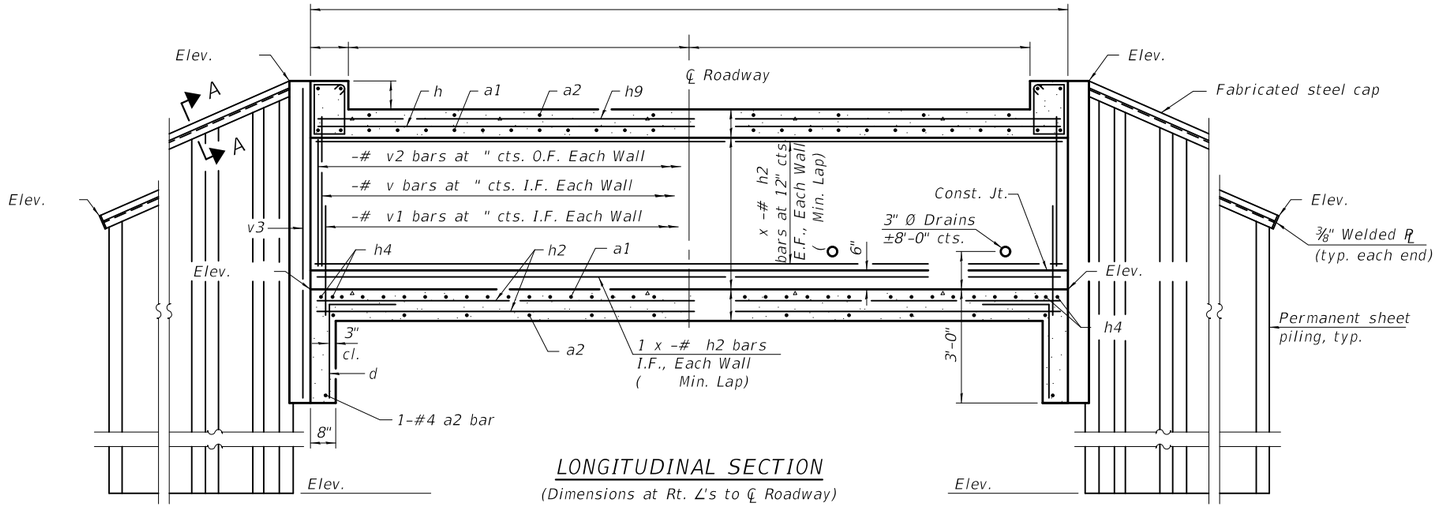

LONGITUDINAL SECTION

(Dimensions at Rt. ∠'s to ℄ Roadway)

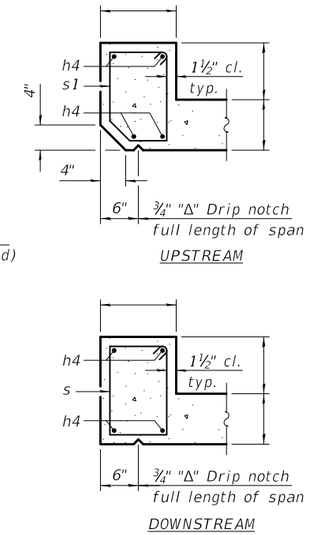

SECTION THRU HEADWALL

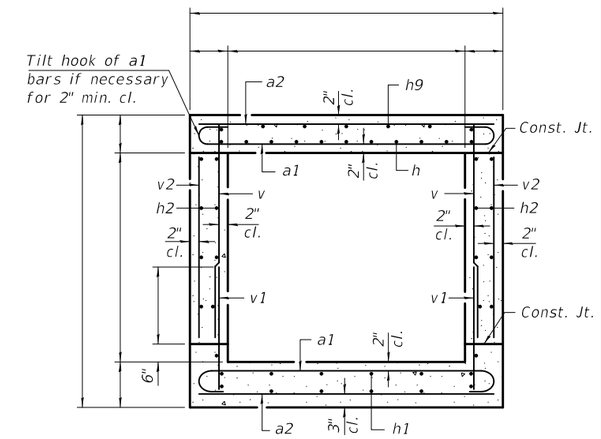

SECTION THRU BARREL

BILL OF MATERIAL

Bar	No.	Size	Length	Shape
a1		#		
a2		#		
d		#4	4'-5"	
h		#		
h1		#		
h2		#		
h4		#		
h9		#		
s		#		
s1		#		
v		#		
v1		#		
v2		#		
v3		#		
Concrete Box Culverts			Cu. Yd.	
Reinforcement Bars			Pound	
Permanent Sheet Piling			Sq. Ft.	

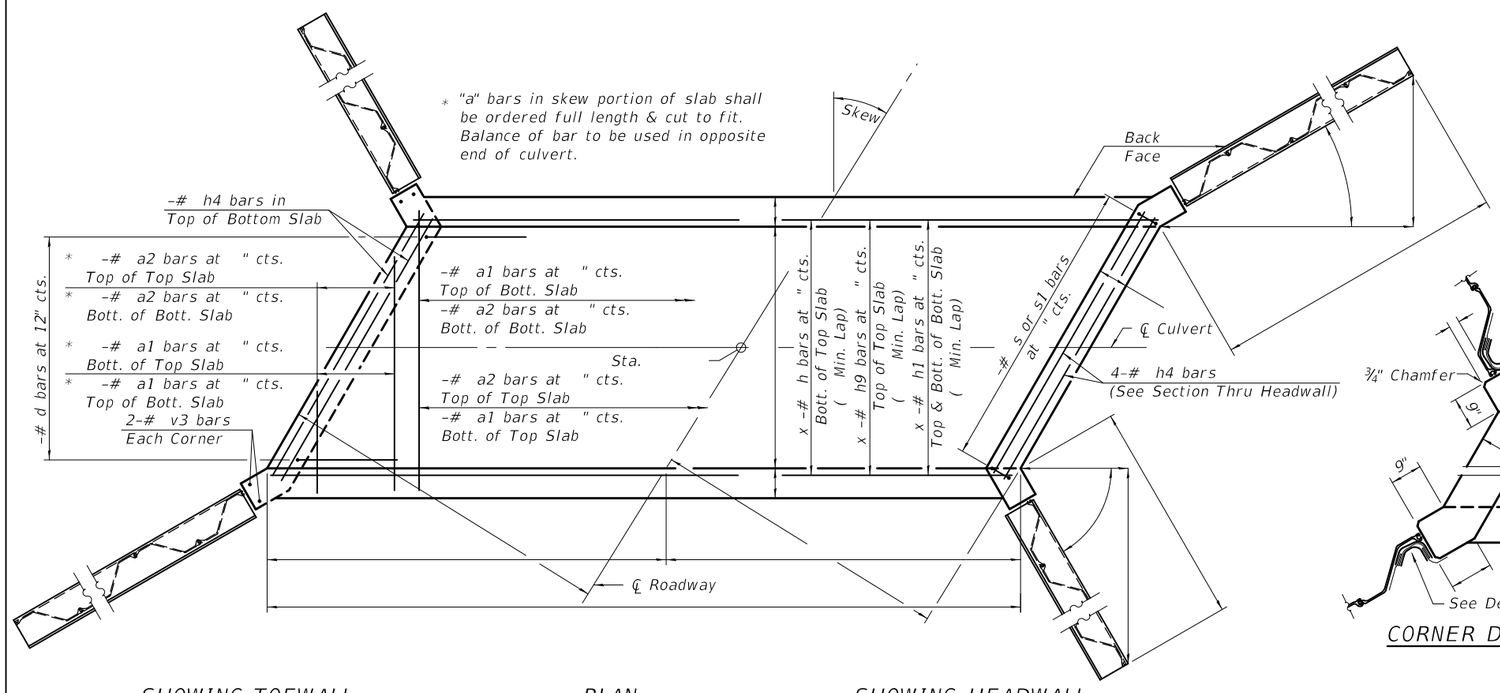

SHOWING TOEWALL PLAN SHOWING HEADWALL

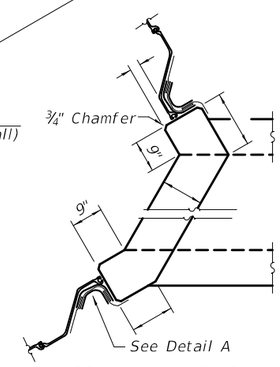

CORNER DETAIL

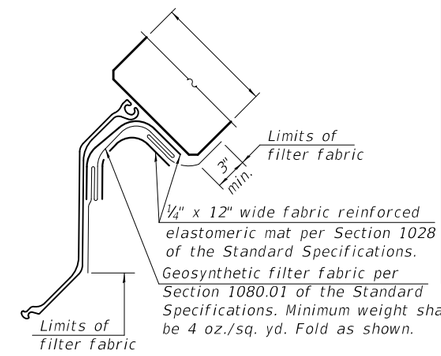

DETAIL A

Notes:

Bars indicated thus 12 x 4-#5 etc. indicates 12 lines of bars with 4 lengths per line.

At the Contractor's option, a longer v1 bar may be ordered to replace the v bar. No reduction in quantities shall be made for this substitution.

The minimum effective section modulus of the permanent steel sheet pile wall shall be in.^{3}/ft.

Sheet piling shall not be driven until the concrete strength has attained a minimum flexural strength of 650 psi or a minimum compressive strength of 3500 psi.

The cost of furnishing and installing the fabricated steel cap, elastomeric mat, and filter fabric shall be included in the cost of Permanent Sheet Piling.

BAR a1

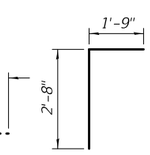

BAR d

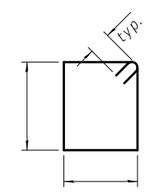

BAR s

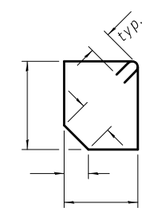

BAR s1

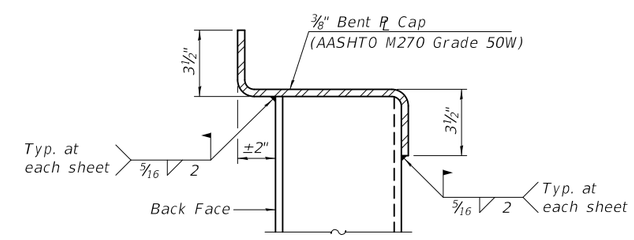

SECTION A-A

TSA-SC-PSSP-RS 2-17-2017

FILE NAME =	USER NAME =	DESIGNED -	REVISED -
		CHECKED -	REVISED -
	PLOT SCALE =	DRAWN -	REVISED -
	PLOT DATE =	CHECKED -	REVISED -

STATE OF ILLINOIS
DEPARTMENT OF TRANSPORTATION

CULVERT DETAILS
STRUCTURE NO.

F.A. RTE.	SECTION	COUNTY	TOTAL SHEETS	SHEET NO.

CONTRACT NO.

ILLINOIS FED. AID PROJECT

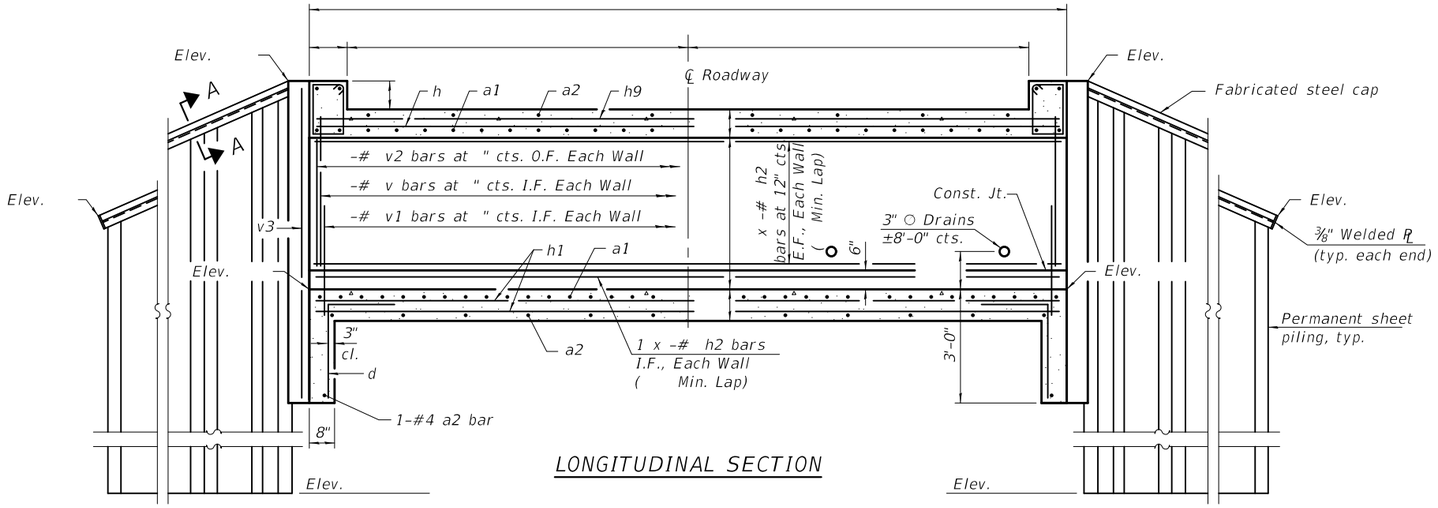

LONGITUDINAL SECTION

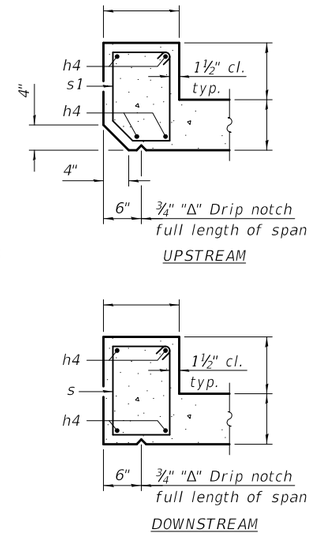

SECTION THRU HEADWALL

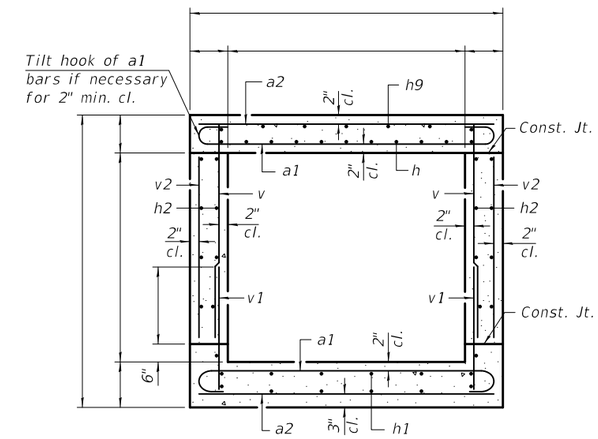

SECTION THRU BARREL

BILL OF MATERIAL

Bar	No.	Size	Length	Shape
a1		#		
a2		#		
d		#4	4'-5"	
h		#		
h1		#		
h2		#		
h4		#		
h9		#		
s		#		
s1		#		
v		#		
v1		#		
v2		#		
v3		#		
Concrete Box Culverts			Cu. Yd.	
Reinforcement Bars			Pound	
Permanent Sheet Piling			Sq. Ft.	

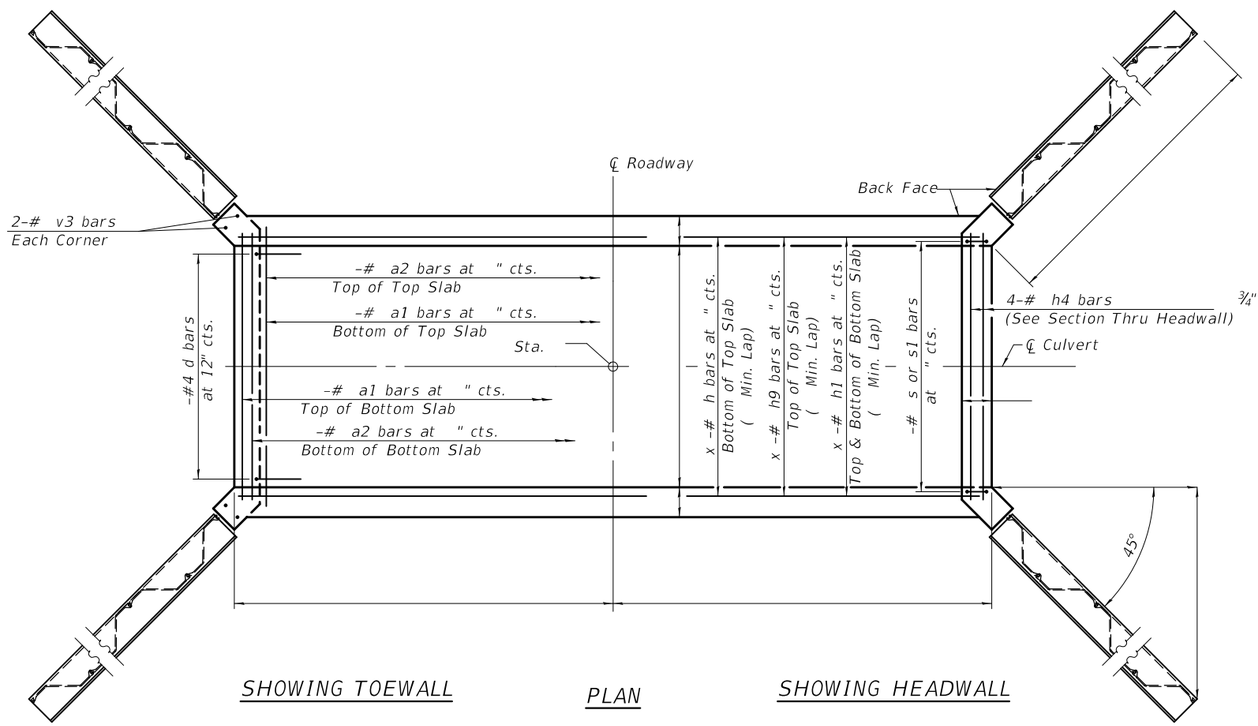

SHOWING TOEWALL

PLAN

SHOWING HEADWALL

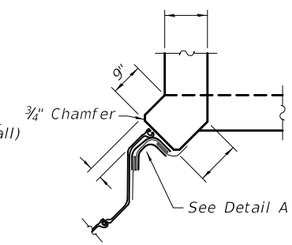

CORNER DETAIL

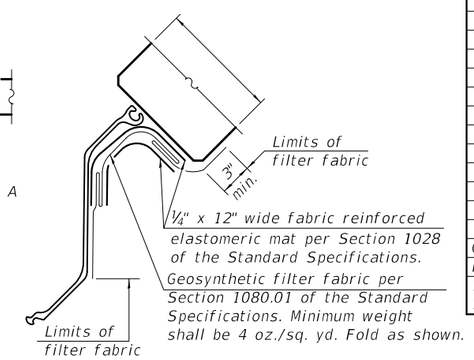

DETAIL A

Notes:

Bars indicated thus 12 x 4-#5 etc. indicates 12 lines of bars with 4 lengths per line.

At the Contractor's option, a longer v1 bar may be ordered to replace the v bar. No reduction in quantities shall be made for this substitution.

The minimum effective section modulus of the permanent steel sheet pile wall shall be in.^{3}/ft.

Sheet piling shall not be driven until the concrete strength has attained a minimum flexural strength of 650 psi or a minimum compressive strength of 3500 psi.

The cost of furnishing and installing the fabricated steel cap, elastomeric mat, and filter fabric shall be included in the cost of Permanent Sheet Piling.

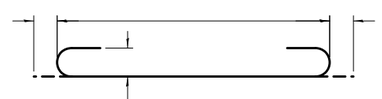

BAR a1

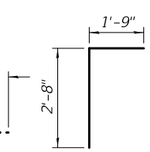

BAR d

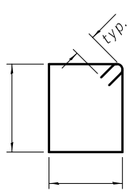

BAR s

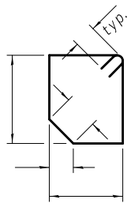

BAR s1

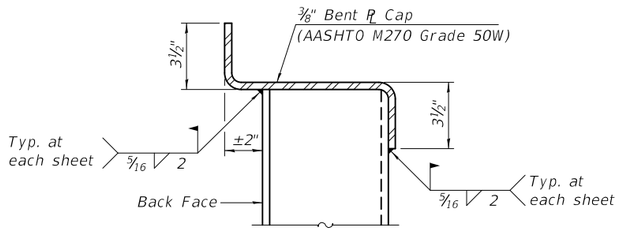

SECTION A-A

TSA-SC-PSSP-ZS 2-17-2017

FILE NAME =	USER NAME =	DESIGNED -	REVISED -
		CHECKED -	REVISED -
	PLOT SCALE =	DRAWN -	REVISED -
	PLOT DATE =	CHECKED -	REVISED -

STATE OF ILLINOIS
DEPARTMENT OF TRANSPORTATION

CULVERT DETAILS
STRUCTURE NO.

F.A. RTE.	SECTION	COUNTY	TOTAL SHEETS	SHEET NO.

CONTRACT NO.

ILLINOIS FED. AID PROJECT

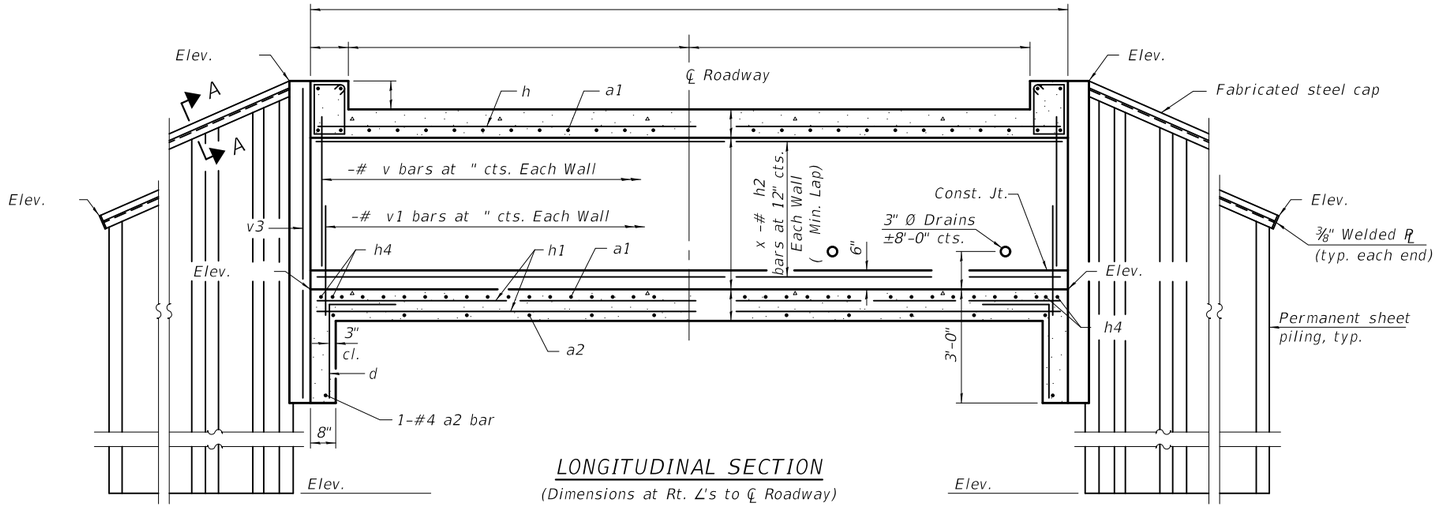

LONGITUDINAL SECTION

(Dimensions at Rt. ∠'s to ℄ Roadway)

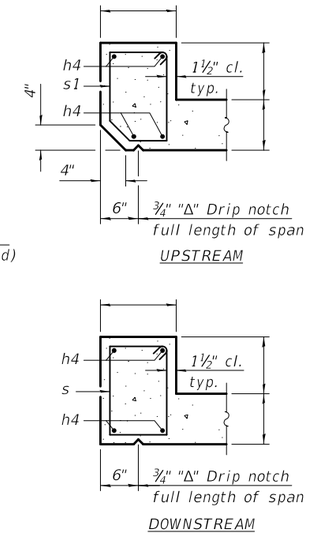

SECTION THRU HEADWALL

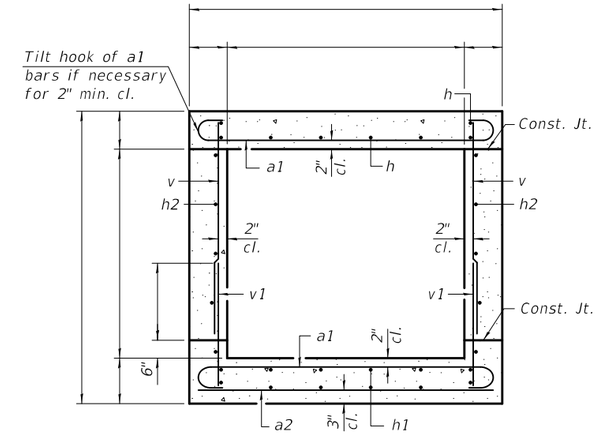

SECTION THRU BARREL

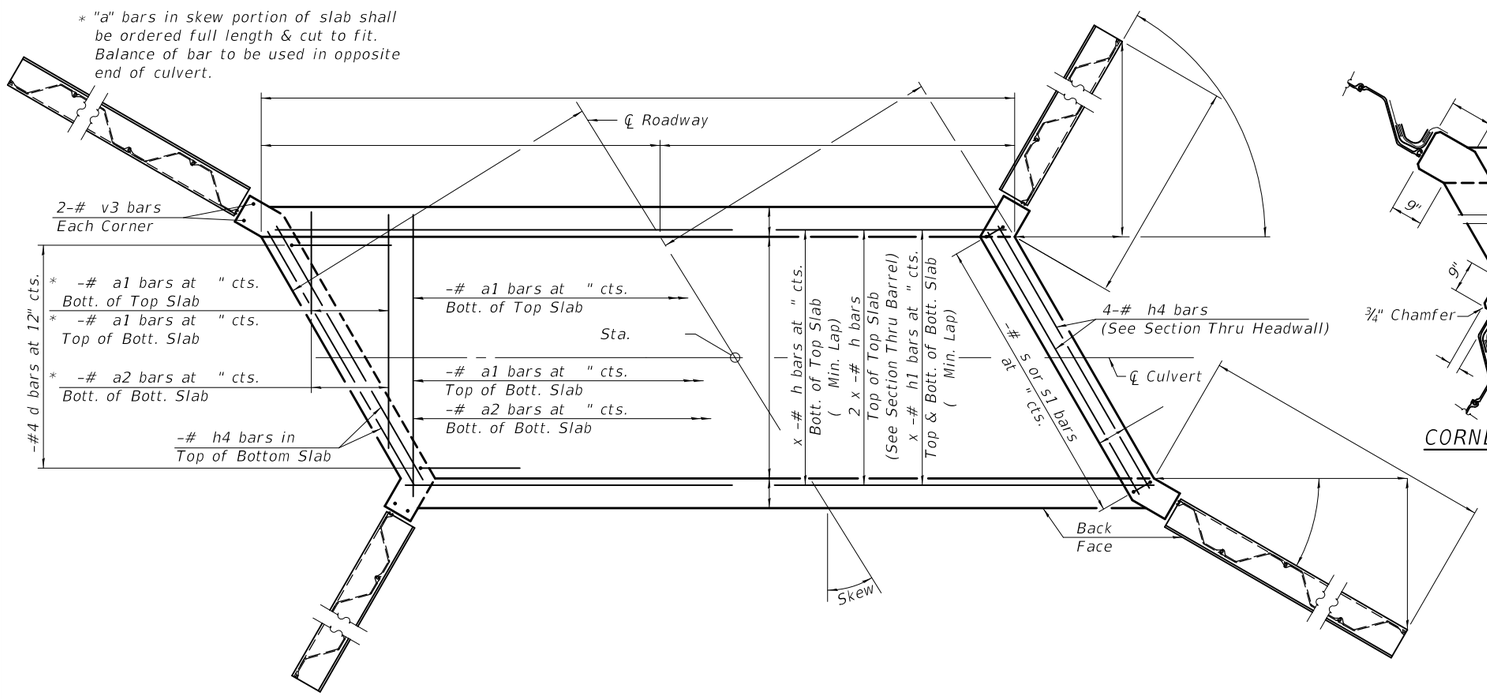

SHOWING TOEWALL

PLAN

SHOWING HEADWALL

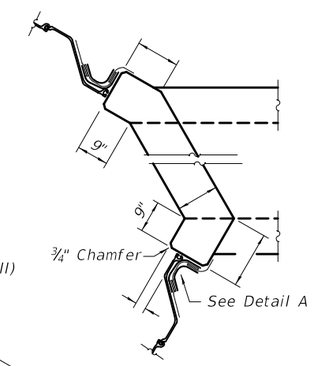

CORNER DETAIL

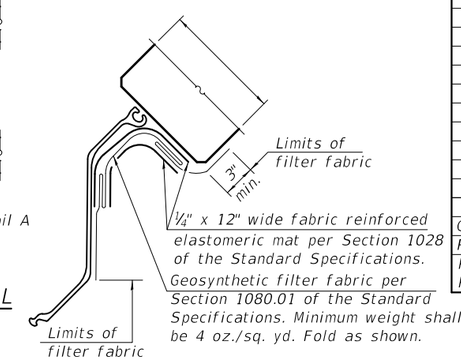

DETAIL A

BILL OF MATERIAL

Bar	No.	Size	Length	Shape
a1		#		
a2		#		
d		#4	4'-5"	
h		#		
h1		#		
h2		#		
h4		#		
s		#		
s1		#		
v		#		
v1		#		
v3		#		
Concrete Box Culverts			Cu. Yd.	
Reinforcement Bars			Pound	
Permanent Sheet Piling			Sq. Ft.	

Notes:

Bars indicated thus 12 x 4-#5 etc. indicates 12 lines of bars with 4 lengths per line.

At the Contractor's option, a longer v1 bar may be ordered to replace the v bar. No reduction in quantities shall be made for this substitution.

The minimum effective section modulus of the permanent steel sheet pile wall shall be in.^{3}/ft.

Sheet piling shall not be driven until the concrete strength has attained a minimum flexural strength of 650 psi or a minimum compressive strength of 3500 psi.

The cost of furnishing and installing the fabricated steel cap, elastomeric mat, and filter fabric shall be included in the cost of Permanent Sheet Piling.

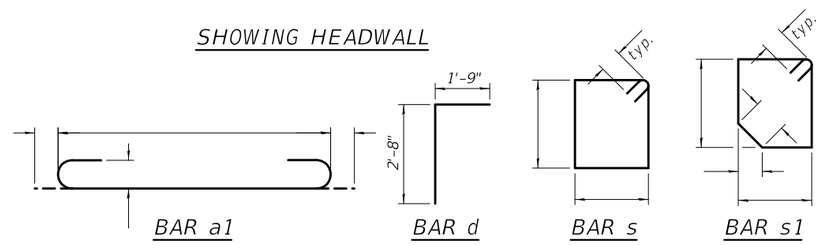

BAR a1 BAR d BAR s BAR s1

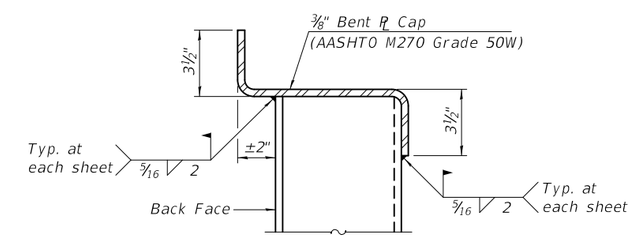

SECTION A-A

TSB-SB-PSSP-LS 2-17-2017

FILE NAME =	USER NAME =	DESIGNED -	REVISED -	STATE OF ILLINOIS DEPARTMENT OF TRANSPORTATION	CULVERT DETAILS STRUCTURE NO.	F.A. RTE.	SECTION	COUNTY	TOTAL SHEETS	SHEET NO.
		CHECKED -	REVISED -							
	PLOT SCALE =	DRAWN -	REVISED -					CONTRACT NO.		
	PLOT DATE =	CHECKED -	REVISED -				ILLINOIS	FED. AID PROJECT		

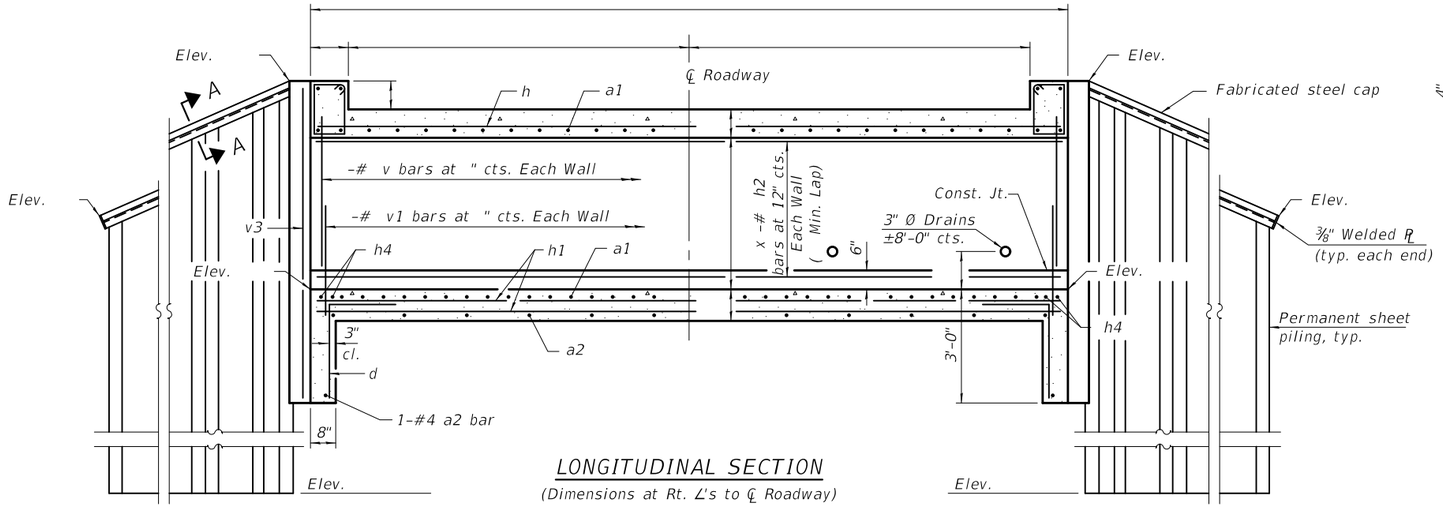

LONGITUDINAL SECTION

(Dimensions at Rt. ∠'s to ℄ Roadway)

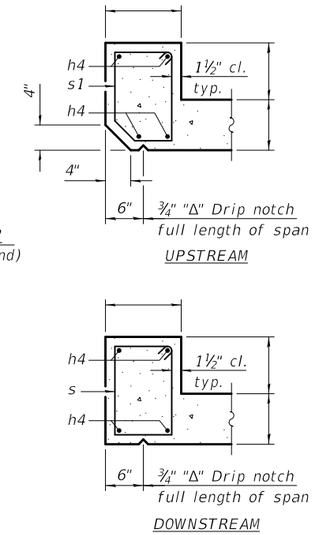

SECTION THRU HEADWALL

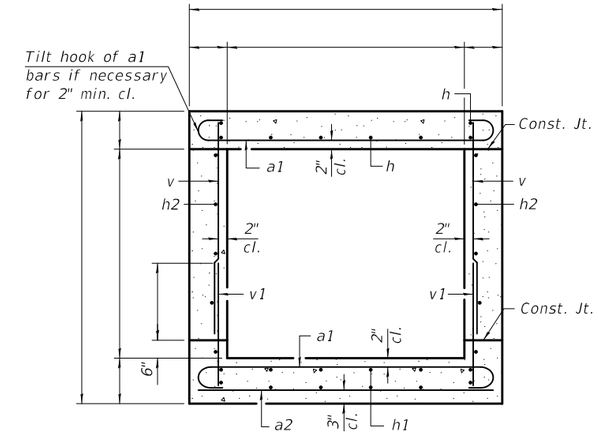

SECTION THRU BARREL

BILL OF MATERIAL

Bar	No.	Size	Length	Shape
a1		#		
a2		#		
d		#4	4'-5"	
h		#		
h1		#		
h2		#		
h4		#		
s		#		
s1		#		
v		#		
v1		#		
v3		#		
Concrete Box Culverts			Cu. Yd.	
Reinforcement Bars			Pound	
Permanent Sheet Piling			Sq. Ft.	

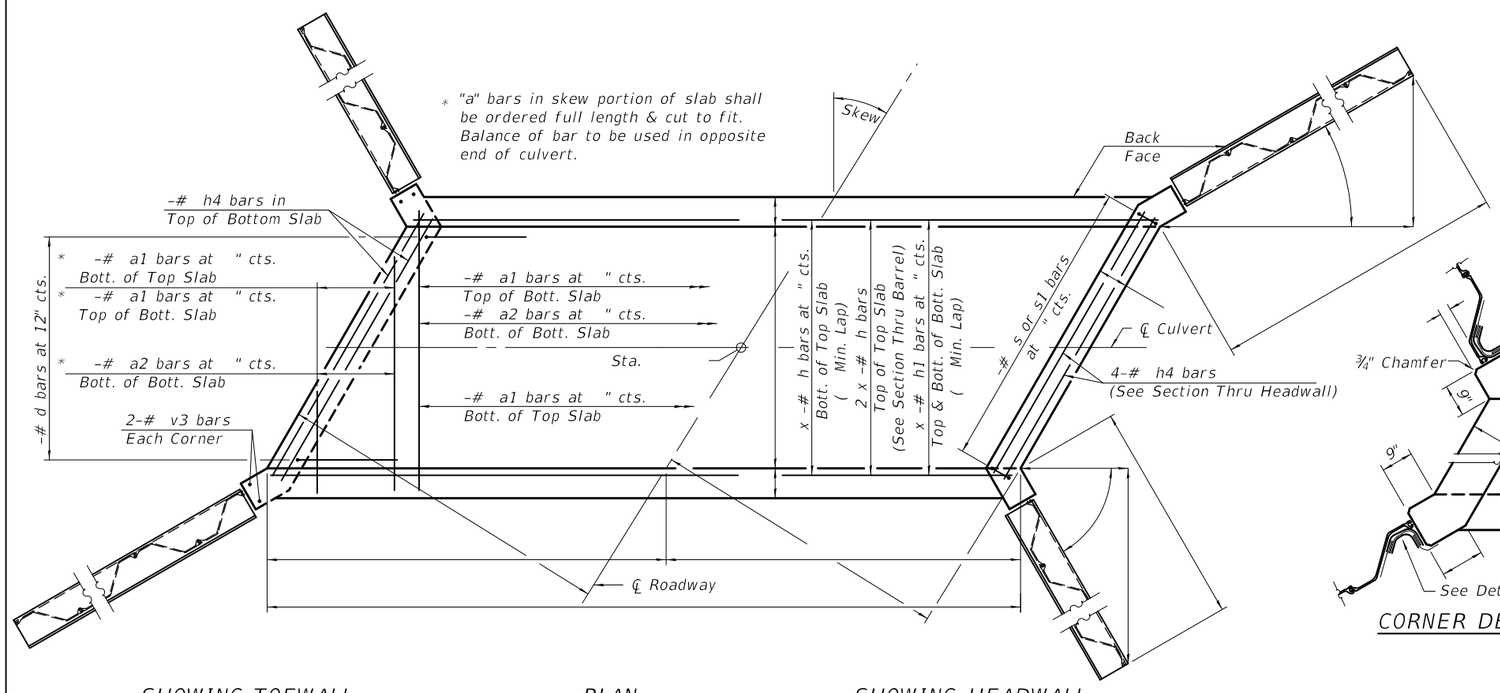

SHOWING TOEWALL PLAN SHOWING HEADWALL

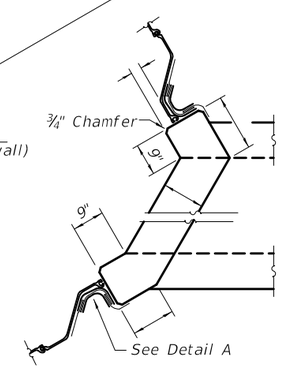

CORNER DETAIL

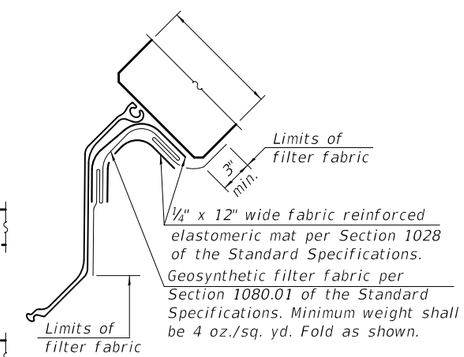

DETAIL A

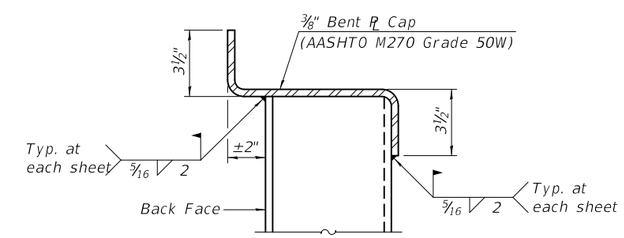

SECTION A-A

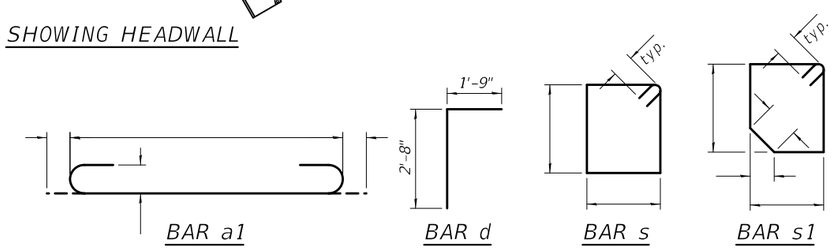

BAR a1 BAR d BAR s BAR s1

Notes:

Bars indicated thus 12 x 4-#5 etc. indicates 12 lines of bars with 4 lengths per line.

At the Contractor's option, a longer v1 bar may be ordered to replace the v bar. No reduction in quantities shall be made for this substitution.

The minimum effective section modulus of the permanent steel sheet pile wall shall be in.³/ft.

Sheet piling shall not be driven until the concrete strength has attained a minimum flexural strength of 650 psi or a minimum compressive strength of 3500 psi.

The cost of furnishing and installing the fabricated steel cap, elastomeric mat, and filter fabric shall be included in the cost of Permanent Sheet Piling.

TSB-SB-PSSP-RS 2-17-2017

FILE NAME =	USER NAME =	DESIGNED -	REVISED -	STATE OF ILLINOIS DEPARTMENT OF TRANSPORTATION	CULVERT DETAILS STRUCTURE NO.	F.A. RTE.	SECTION	COUNTY	TOTAL SHEETS	SHEET NO.
		CHECKED -	REVISED -							
	PLOT SCALE =	DRAWN -	REVISED -					CONTRACT NO.		
	PLOT DATE =	CHECKED -	REVISED -				ILLINOIS	FED. AID PROJECT		

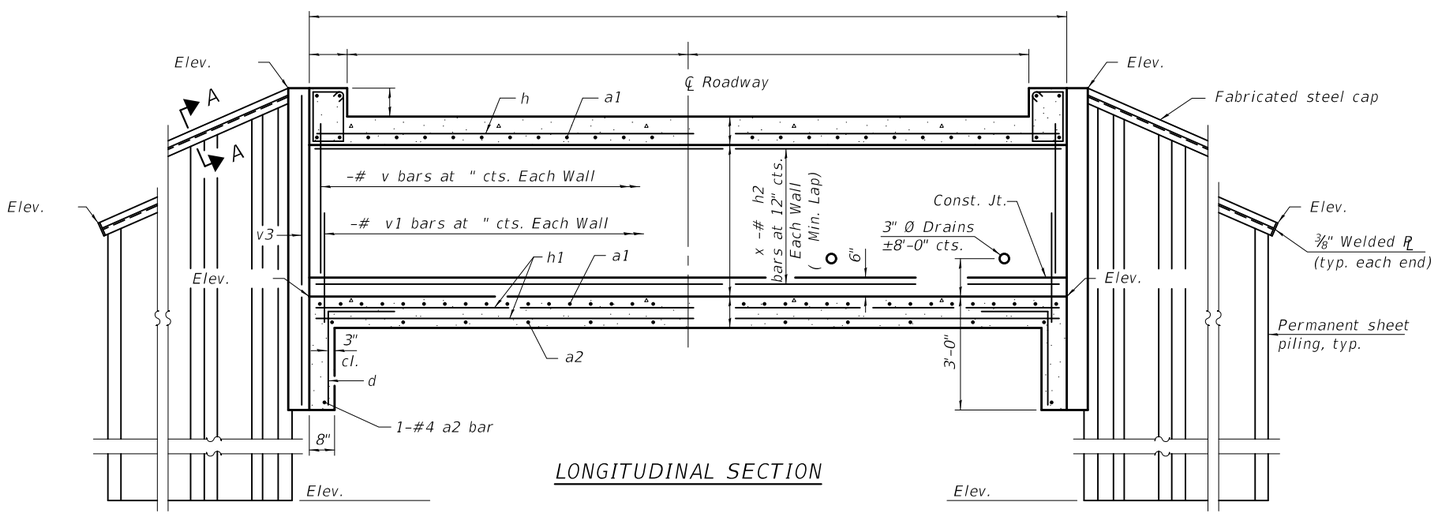

LONGITUDINAL SECTION

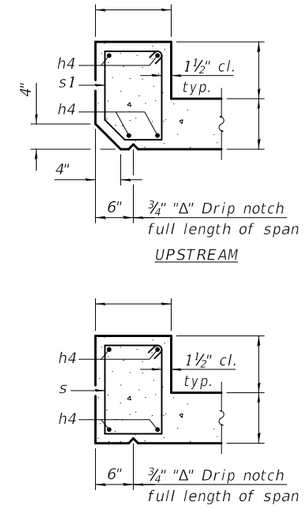

SECTION THRU HEADWALL

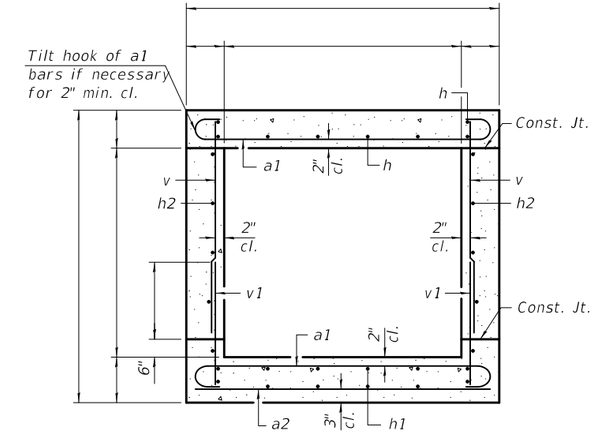

SECTION THRU BARREL

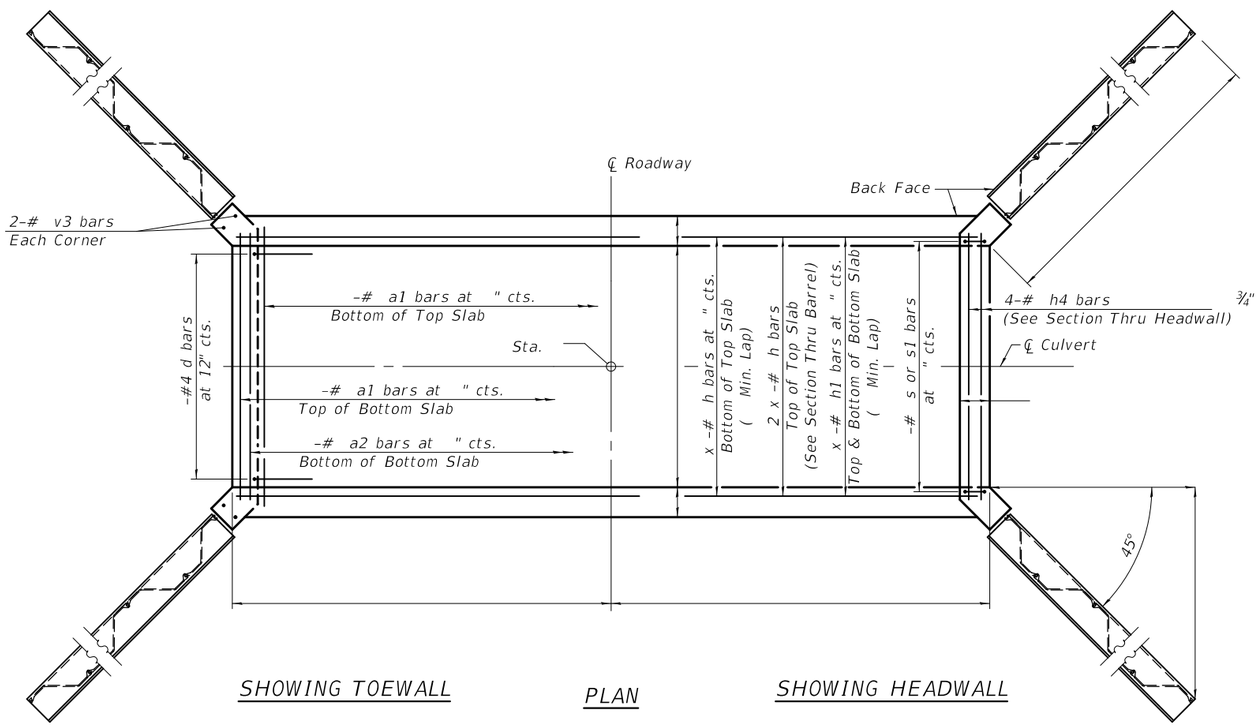

SHOWING TOEWALL

PLAN

SHOWING HEADWALL

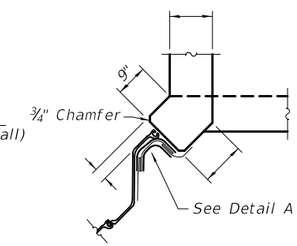

CORNER DETAIL

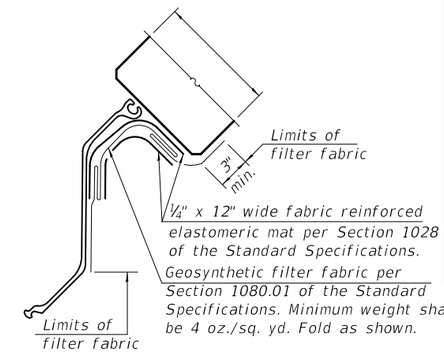

DETAIL A

BILL OF MATERIAL

Bar	No.	Size	Length	Shape
a1		#		
a2		#		
d		#4	4'-5"	
h		#		
h1		#		
h2		#		
h4		#		
s		#		
s1		#		
v		#		
v1		#		
v3		#		
Concrete Box Culverts			Cu. Yd.	
Reinforcement Bars			Pound	
Permanent Sheet Piling			Sq. Ft.	

Notes:

Bars indicated thus 12 x 4-#5 etc. indicates 12 lines of bars with 4 lengths per line.

At the Contractor's option, a longer v1 bar may be ordered to replace the v bar. No reduction in quantities shall be made for this substitution.

The minimum effective section modulus of the permanent steel sheet pile wall shall be in.^{3}/ft.

Sheet piling shall not be driven until the concrete strength has attained a minimum flexural strength of 650 psi or a minimum compressive strength of 3500 psi.

The cost of furnishing and installing the fabricated steel cap, elastomeric mat, and filter fabric shall be included in the cost of Permanent Sheet Piling.

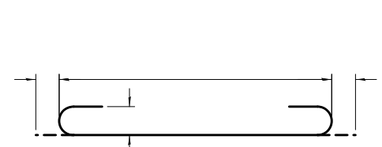

BAR a1

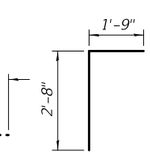

BAR d

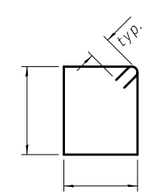

BAR s

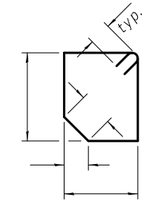

BAR s1

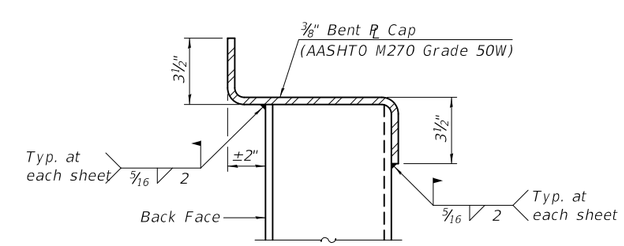

SECTION A-A

TSB-SB-PSSP-ZS 2-17-2017

FILE NAME =	USER NAME =	DESIGNED -	REVISED -	STATE OF ILLINOIS DEPARTMENT OF TRANSPORTATION	CULVERT DETAILS STRUCTURE NO.	F.A. RTE.	SECTION	COUNTY	TOTAL SHEETS	SHEET NO.
		CHECKED -	REVISED -							
	PLOT SCALE =	DRAWN -	REVISED -					CONTRACT NO.		
	PLOT DATE =	CHECKED -	REVISED -				ILLINOIS	FED. AID PROJECT		

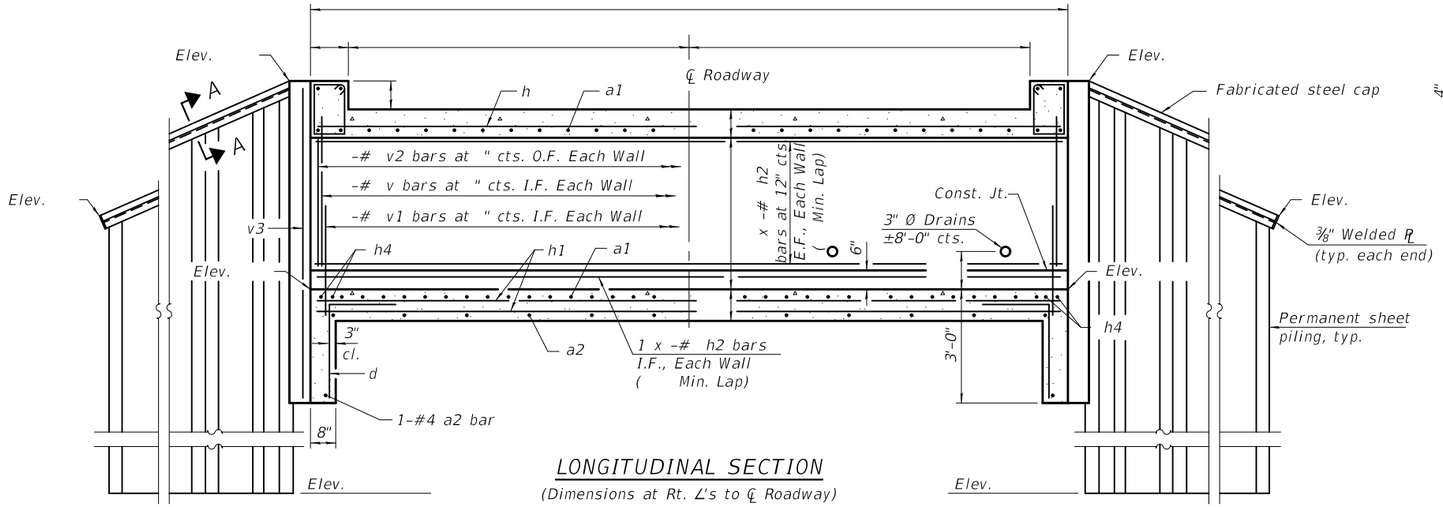

LONGITUDINAL SECTION

(Dimensions at Rt. ∠'s to ℄ Roadway)

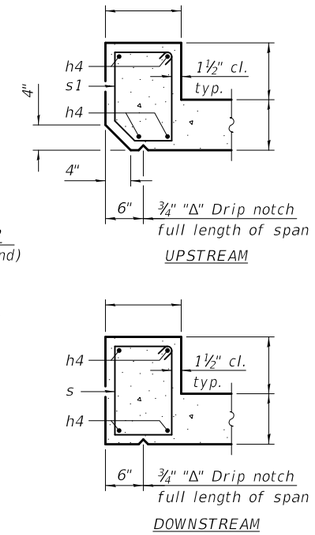

SECTION THRU HEADWALL

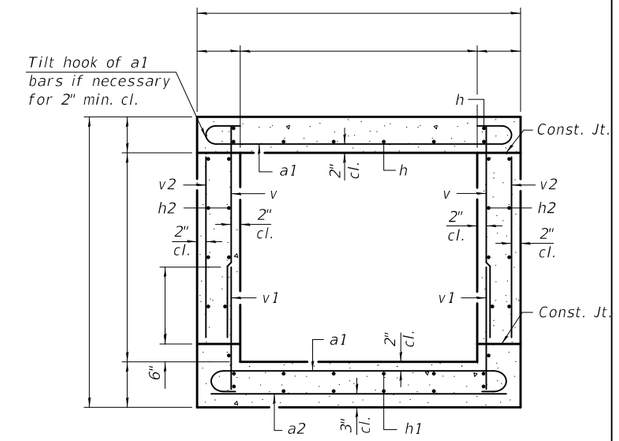

SECTION THRU BARREL

BILL OF MATERIAL

Bar	No.	Size	Length	Shape
a1		#		
a2		#		
d		#4	4'-5"	
h		#		
h1		#		
h2		#		
h4		#		
s		#		
s1		#		
v		#		
v1		#		
v2		#		
v3		#		
Concrete Box Culverts			Cu. Yd.	
Reinforcement Bars			Pound	
Permanent Sheet Piling			Sq. Ft.	

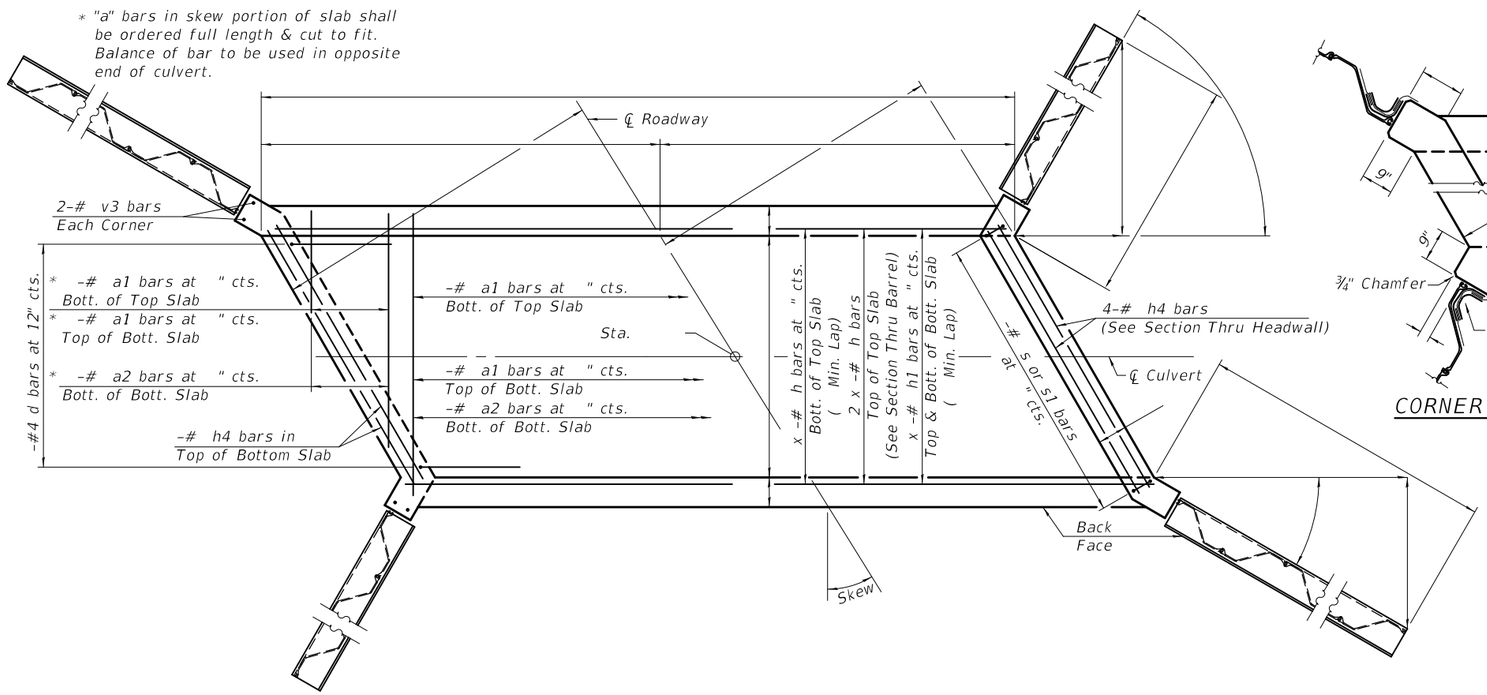

SHOWING TOEWALL

PLAN

SHOWING HEADWALL

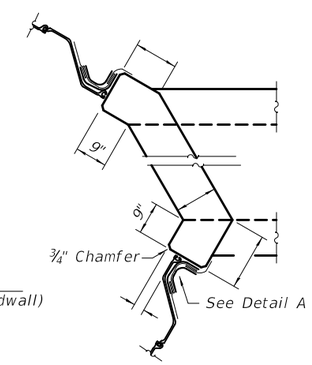

CORNER DETAIL

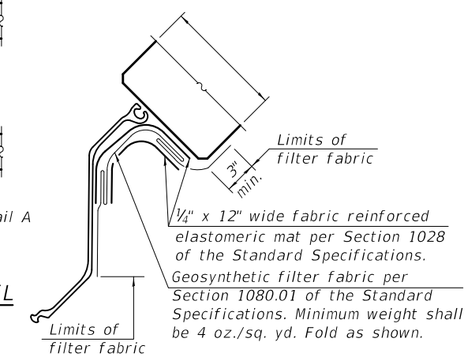

DETAIL A

Notes:

Bars indicated thus 12 x 4-#5 etc. indicates 12 lines of bars with 4 lengths per line.

At the Contractor's option, a longer v1 bar may be ordered to replace the v bar. No reduction in quantities shall be made for this substitution.

The minimum effective section modulus of the permanent steel sheet pile wall shall be in.³/ft.

Sheet piling shall not be driven until the concrete strength has attained a minimum flexural strength of 650 psi or a minimum compressive strength of 3500 psi.

The cost of furnishing and installing the fabricated steel cap, elastomeric mat, and filter fabric shall be included in the cost of Permanent Sheet Piling.

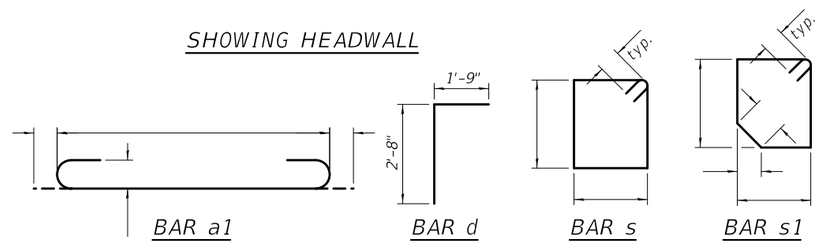

BAR a1 BAR d BAR s BAR s1

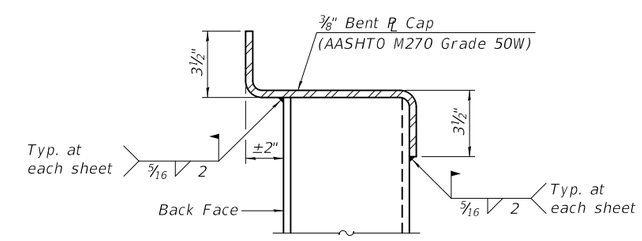

SECTION A-A

TSB-SC-PSSP-LS 2-17-2017

FILE NAME =	USER NAME =	DESIGNED -	REVISED -	STATE OF ILLINOIS DEPARTMENT OF TRANSPORTATION	CULVERT DETAILS STRUCTURE NO.	F.A. RTE.	SECTION	COUNTY	TOTAL SHEETS	SHEET NO.
		CHECKED -	REVISED -							
	PLOT SCALE =	DRAWN -	REVISED -					CONTRACT NO.		
	PLOT DATE =	CHECKED -	REVISED -				ILLINOIS	FED. AID PROJECT		

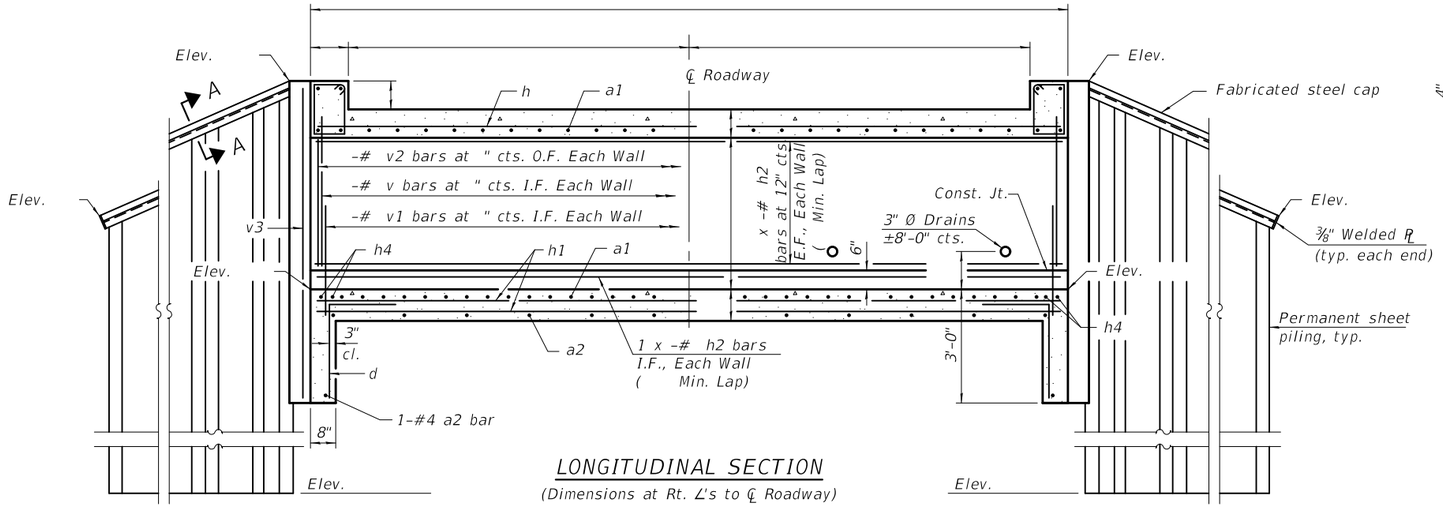

LONGITUDINAL SECTION

(Dimensions at Rt. ∠'s to ℄ Roadway)

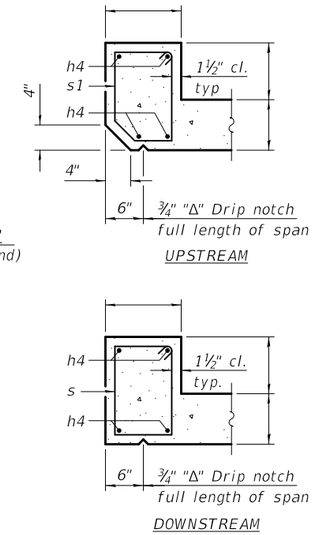

SECTION THRU HEADWALL

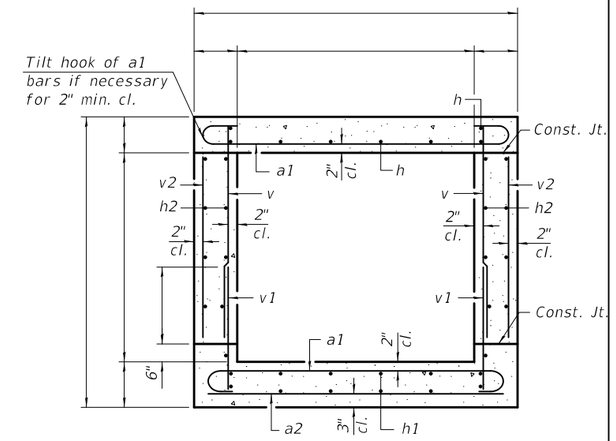

SECTION THRU BARREL

BILL OF MATERIAL

Bar	No.	Size	Length	Shape
a1		#		
a2		#		
d		#4	4'-5"	
h		#		
h1		#		
h2		#		
h4		#		
s		#		
s1		#		
v		#		
v1		#		
v2		#		
v3		#		
Concrete Box Culverts			Cu. Yd.	
Reinforcement Bars			Pound	
Permanent Sheet Piling			Sq. Ft.	

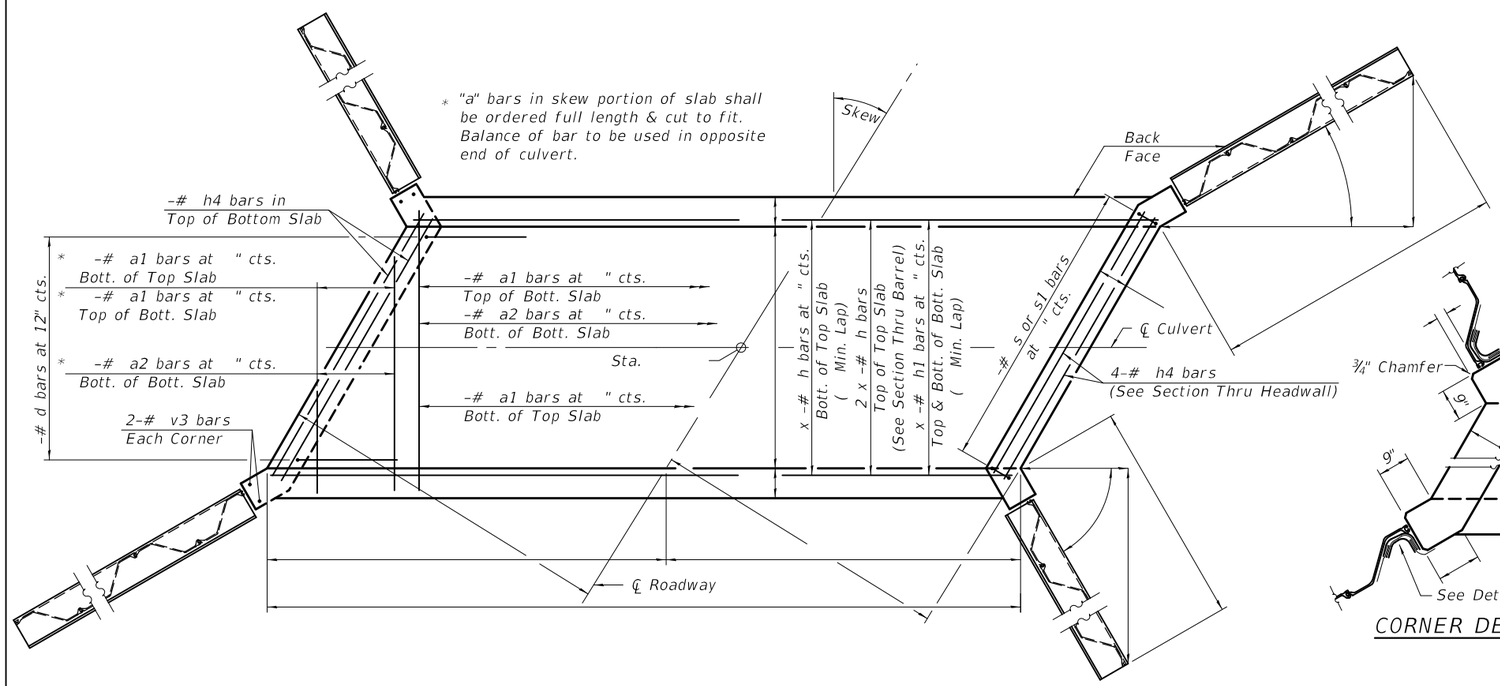

SHOWING TOEWALL PLAN SHOWING HEADWALL

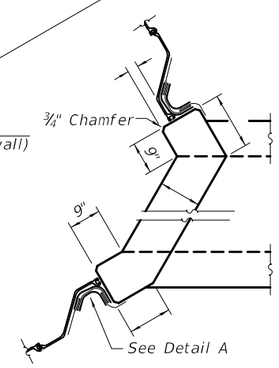

CORNER DETAIL

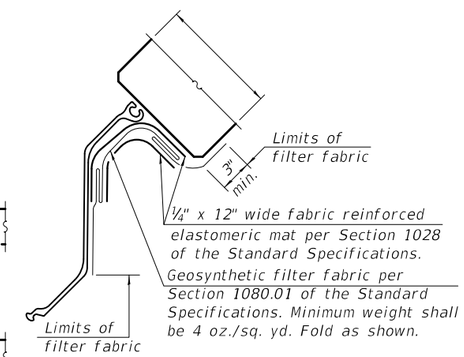

DETAIL A

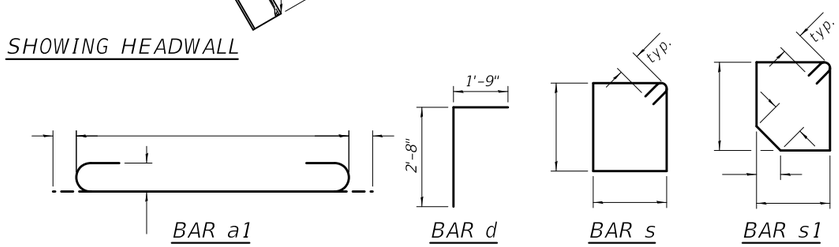

BAR a1 BAR d BAR s BAR s1

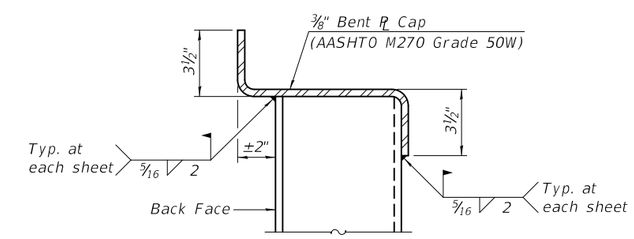

SECTION A-A

Notes:

Bars indicated thus 12 x 4-#5 etc. indicates 12 lines of bars with 4 lengths per line.

At the Contractor's option, a longer v1 bar may be ordered to replace the v bar. No reduction in quantities shall be made for this substitution.

The minimum effective section modulus of the permanent steel sheet pile wall shall be in.³/ft.

Sheet piling shall not be driven until the concrete strength has attained a minimum flexural strength of 650 psi or a minimum compressive strength of 3500 psi.

The cost of furnishing and installing the fabricated steel cap, elastomeric mat, and filter fabric shall be included in the cost of Permanent Sheet Piling.

TSB-SC-PSSP-RS 2-17-2017

FILE NAME =	USER NAME =	DESIGNED -	REVISED -	STATE OF ILLINOIS DEPARTMENT OF TRANSPORTATION	CULVERT DETAILS STRUCTURE NO.	F.A. RTE.	SECTION	COUNTY	TOTAL SHEETS	SHEET NO.
		CHECKED -	REVISED -							
	PLOT SCALE =	DRAWN -	REVISED -					CONTRACT NO.		
	PLOT DATE =	CHECKED -	REVISED -				ILLINOIS	FED. AID PROJECT		

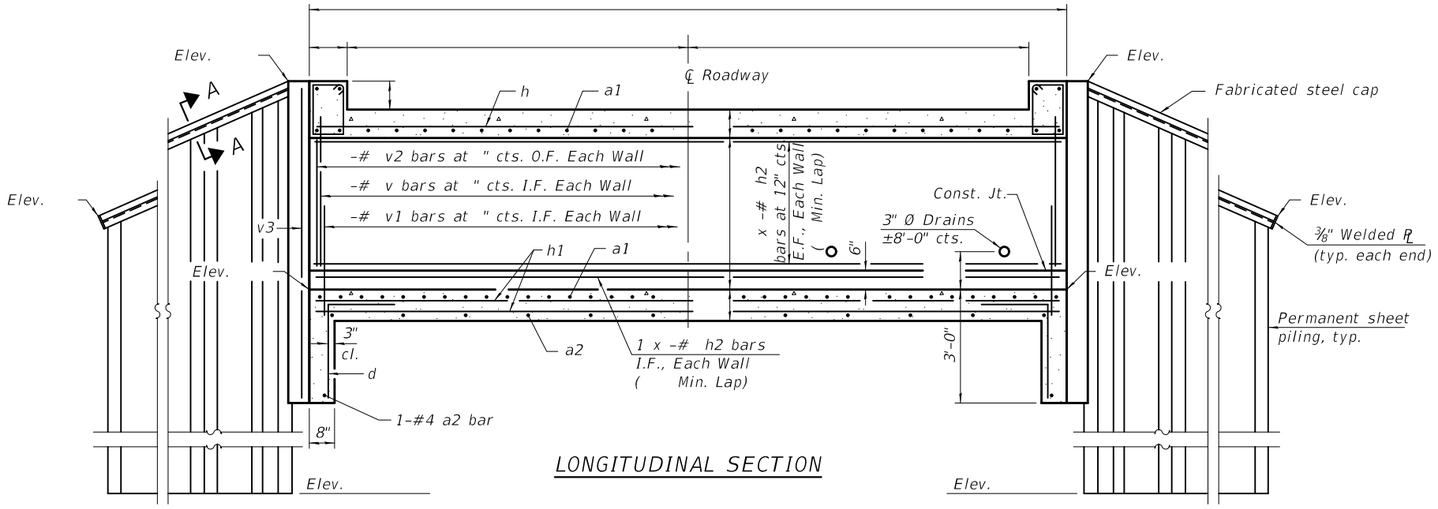

LONGITUDINAL SECTION

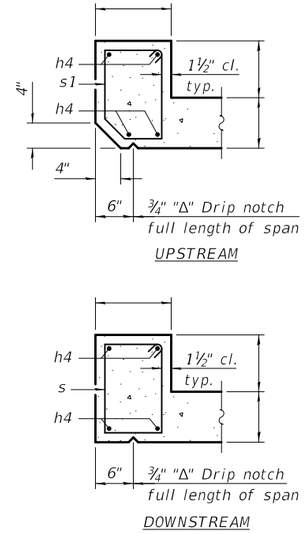

SECTION THRU HEADWALL

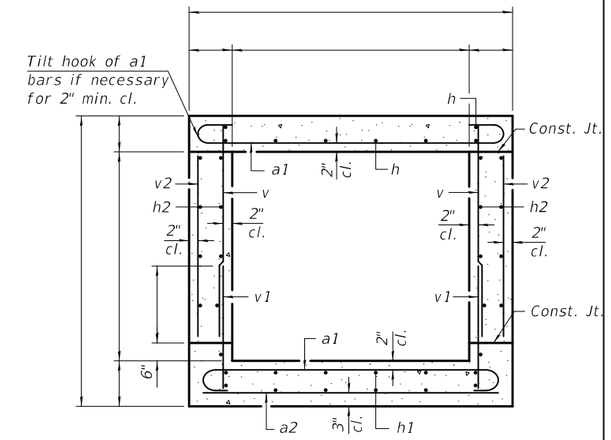

SECTION THRU BARREL

BILL OF MATERIAL

Bar	No.	Size	Length	Shape
a1		#		
a2		#		
d		#4	4'-5"	
h		#		
h1		#		
h2		#		
h4		#		
s		#		
s1		#		
v		#		
v1		#		
v2		#		
v3		#		
Concrete Box Culverts			Cu. Yd.	
Reinforcement Bars			Pound	
Permanent Sheet Piling			Sq. Ft.	

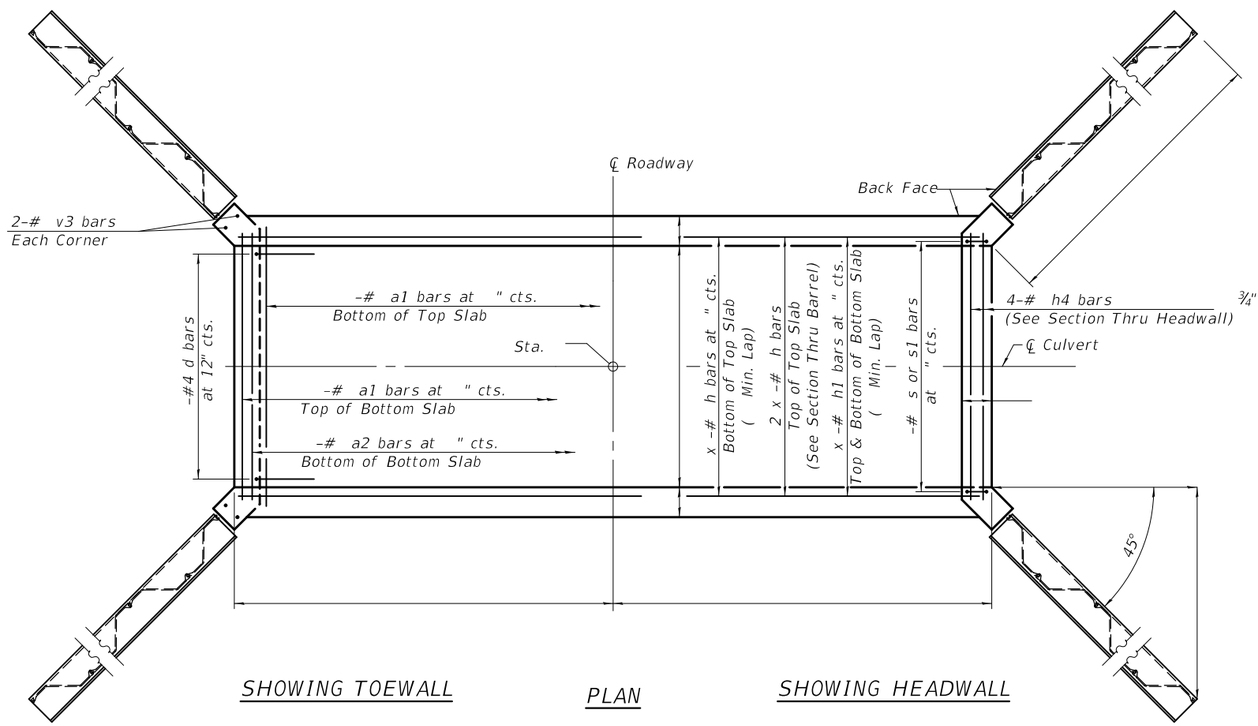

SHOWING TOEWALL

PLAN

SHOWING HEADWALL

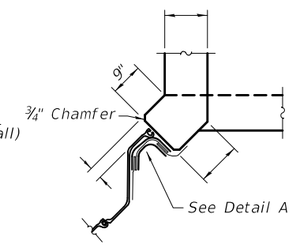

CORNER DETAIL

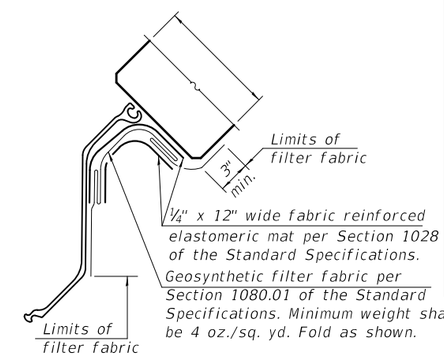

DETAIL A

Notes:

Bars indicated thus 12 x 4-#5 etc. indicates 12 lines of bars with 4 lengths per line.

At the Contractor's option, a longer v1 bar may be ordered to replace the v bar. No reduction in quantities shall be made for this substitution.

The minimum effective section modulus of the permanent steel sheet pile wall shall be in.³/ft.

Sheet piling shall not be driven until the concrete strength has attained a minimum flexural strength of 650 psi or a minimum compressive strength of 3500 psi.

The cost of furnishing and installing the fabricated steel cap, elastomeric mat, and filter fabric shall be included in the cost of Permanent Sheet Piling.

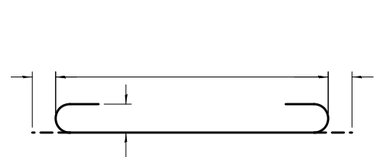

BAR a1

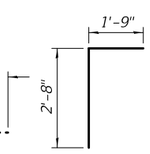

BAR d

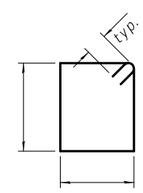

BAR s

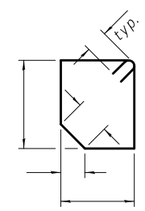

BAR s1

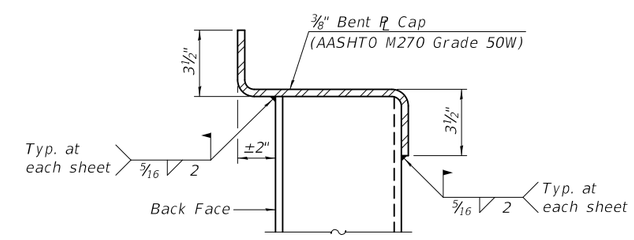

SECTION A-A

TSB-SC-PSSP-ZS 2-17-2017

FILE NAME =	USER NAME =	DESIGNED -	REVISED -
		CHECKED -	REVISED -
	PLOT SCALE =	DRAWN -	REVISED -
	PLOT DATE =	CHECKED -	REVISED -

STATE OF ILLINOIS
DEPARTMENT OF TRANSPORTATION

CULVERT DETAILS
STRUCTURE NO.

F.A. RTE.	SECTION	COUNTY	TOTAL SHEETS	SHEET NO.

CONTRACT NO.

ILLINOIS FED. AID PROJECT