| CELL / MODEL NAME | DESCRIPTION | DATE |
|---|---|---|
| TSA-SB-TT-LS | 2 rows of reinf in top slab; 1 row of reinf in each sidewall; T-Type Wingwalls, Left Skew | 2/17/2017 |
| TSA-SB-TT-RS | 2 rows of reinf in top slab; 1 row of reinf in each sidewall; T-Type Wingwalls, Right Skew | 2/17/2017 |
| TSA-SB-TT-ZS | 2 rows of reinf in top slab; 1 row of reinf in each sidewall; T-Type Wingwalls, Zero Skew | 2/17/2017 |
| TSA-SC-TT-LS | 2 rows of reinf in top slab; 2 rows of reinf in each sidewall; T-Type Wingwalls, Left Skew | 2/17/2017 |
| TSA-SC-TT-RS | 2 rows of reinf in top slab; 2 rows of reinf in each sidewall; T-Type Wingwalls, Right Skew | 2/17/2017 |
| TSA-SC-TT-ZS | 2 rows of reinf in top slab; 2 rows of rein in each sidewall; T-Type Wingwalls, Zero Skew | 2/17/2017 |
| TSB-SB-TT-LS | 1 row of reinf in top slab; 1 row of reinf in each sidewall; T-Type Wingwalls, Left Skew | 2/17/2017 |
| TSB-SB-TT-RS | 1 row of reinf in top slab; 1 row of reinf in each sidewall; T-Type Wingwalls, Right Skew | 2/17/2017 |
| TSB-SB-TT-ZS | 1 row of reinf in top slab; 1 row of reinf in each sidewall; T-Type Wingwalls, Zero Skew | 2/17/2017 |
| TSB-SC-TT-LS | 1 row of reinf in top slab; 2 rows of reinf in each sidewall; T-Type Wingwalls, Left Skew | 2/17/2017 |
| TSB-SC-TT-RS | 1 row of reinf in top slab; 2 rows of reinf in each sidewall; T-Type Wingwalls, Right Skew | 2/17/2017 |
| TSB-SC-TT-ZS | 1 row of reinf in top slab; 2 rows of reinf in each sidewall; T-Type Wingwalls, Zero Skew | 2/17/2017 |

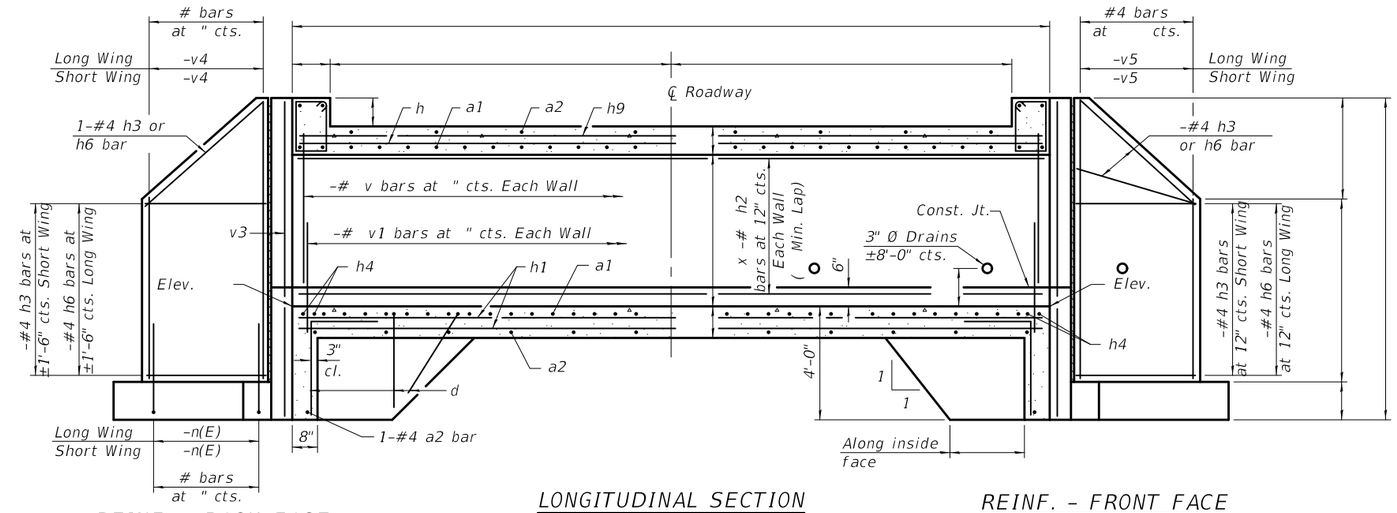


REINF. - BACK FACE

LONGITUDINAL SECTION

(Dimensions at Rt. ∠'s to ℄ Roadway)

REINF. - FRONT FACE

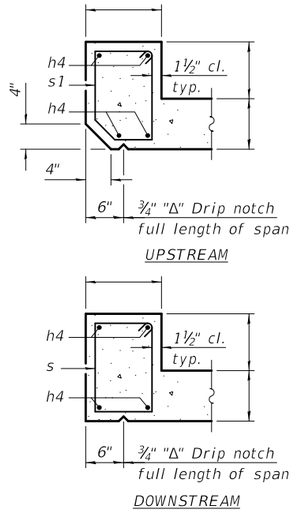


SECTION THRU HEADWALL

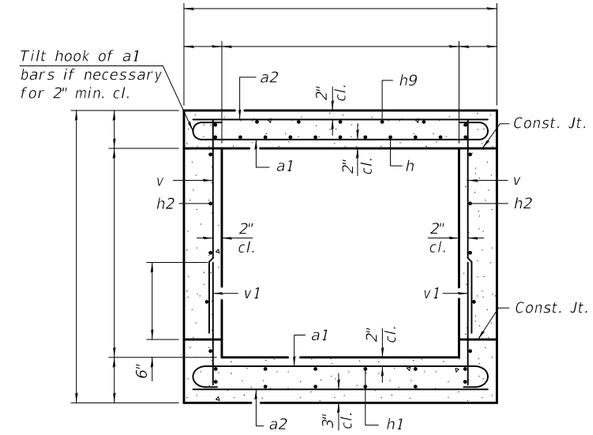


SECTION THRU BARREL

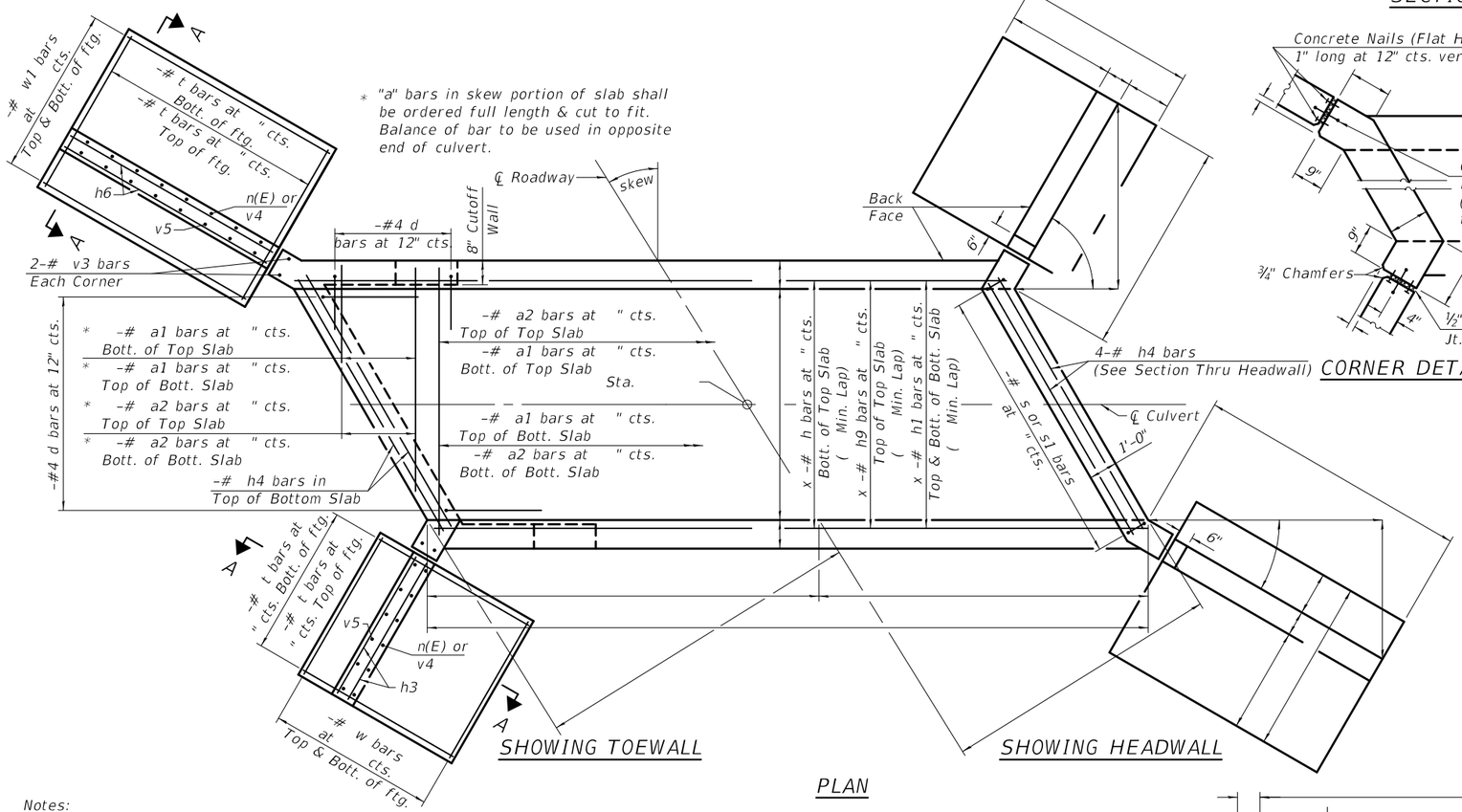


SHOWING TOEWALL

SHOWING HEADWALL

PLAN

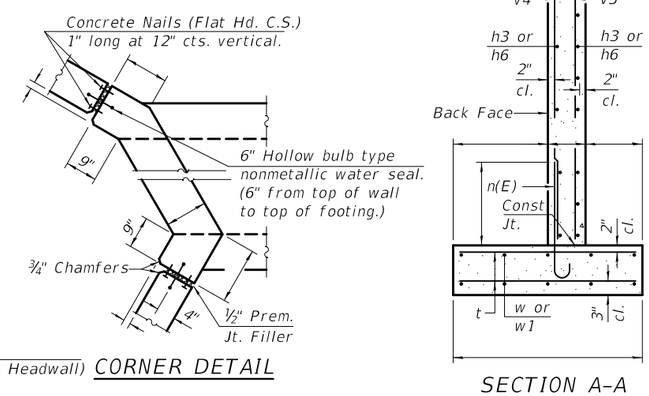


CORNER DETAIL

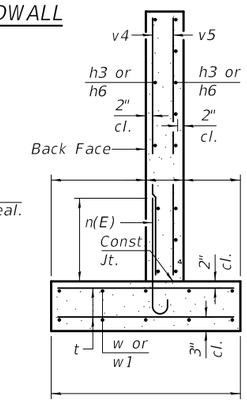


SECTION A-A

(Max. Applied Service Bearing Pressure = ksf)

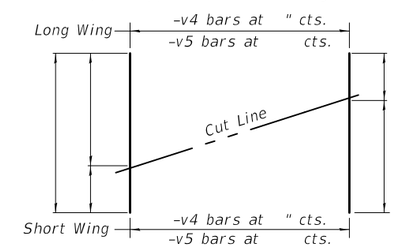


FIELD CUTTING DIAGRAM

Order bars shown full length. Cut as shown and use remainder of bars in opposite wingwall.

## BILL OF MATERIAL

| Bar | No. | Size | Length | Shape |
|---|---|---|---|---|
| | | | | |
| a1 | | # | | |
| a2 | | # | | |
| | | | | |
| d | | #4 | 5'-5" | |
| | | | | |
| h | | # | | |
| h1 | | # | | |
| h2 | | # | | |
| h3 | | #4 | | |
| h4 | | # | | |
| h6 | | #4 | | |
| h9 | | # | | |
| | | | | |
| n(E) | | # | | |
| | | | | |
| s | | # | | |
| s1 | | # | | |
| | | | | |
| t | | # | | |
| | | | | |
| v | | # | | |
| v1 | | # | | |
| v3 | | # | | |
| v4 | | # | | |
| v5 | | # | | |
| | | | | |
| w | | #5 | | |
| w1 | | #5 | | |
| | | | | |
| | | | | |
| Concrete Box Culverts | | | Cu. Yd. | |
| Reinforcement Bars | | | Pound | |
| Reinforcement Bars, Epoxy Coated | | | Pound | |

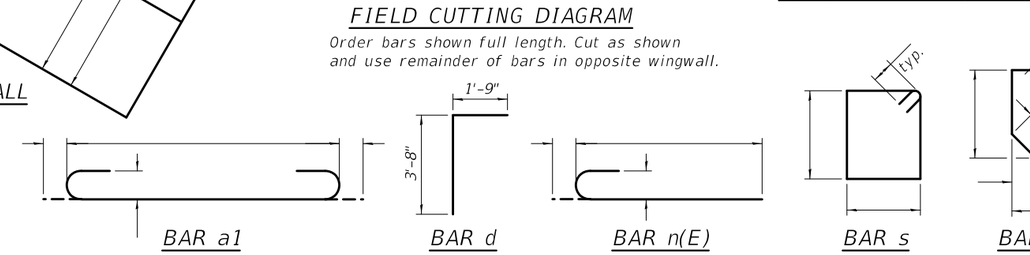


BAR a1 BAR d BAR n(E) BAR s BAR s1

Notes:

Bars indicated thus 12 x 4-#5 etc. indicates 12 lines of bars with 4 lengths per line.

At the Contractor's option, a longer v1 bar may be ordered to replace the v bar. No reduction in quantities shall be made for this substitution.

TSA-SB-TT-LS 2-17-2017

| FILE NAME = | USER NAME = | DESIGNED - | REVISED - |
|---|---|---|---|
| | | CHECKED - | REVISED - |
| | PLOT SCALE = | DRAWN - | REVISED - |
| | PLOT DATE = | CHECKED - | REVISED - |

STATE OF ILLINOIS
DEPARTMENT OF TRANSPORTATION

CULVERT DETAILS
STRUCTURE NO.

| F.A. RTE. | SECTION | COUNTY | TOTAL SHEETS | SHEET NO. |
|---|---|---|---|---|
| | | | | |

CONTRACT NO.

ILLINOIS FED. AID PROJECT

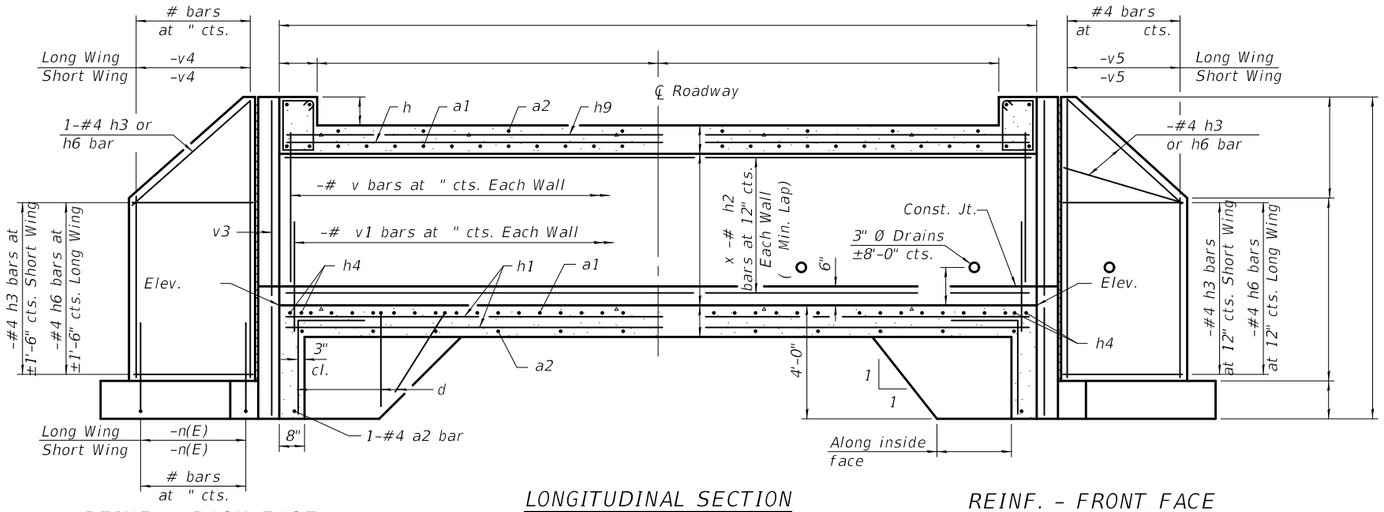


REINF. - BACK FACE

LONGITUDINAL SECTION

(Dimensions at Rt. ∠'s to ℄ Roadway)

REINF. - FRONT FACE

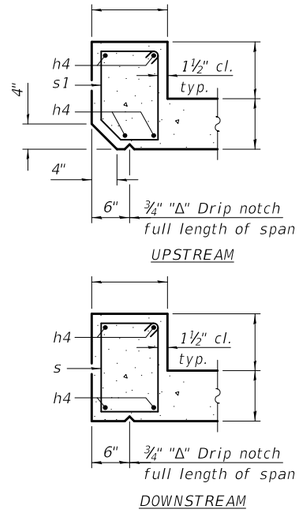


SECTION THRU HEADWALL

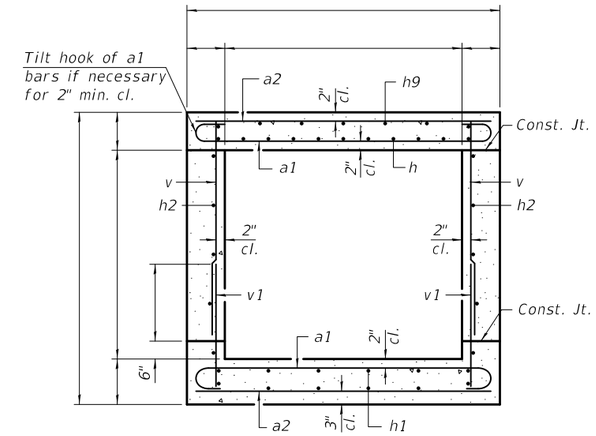


SECTION THRU BARREL

## BILL OF MATERIAL

| Bar | No. | Size | Length | Shape |
|---|---|---|---|---|
| | | | | |
| a1 | | # | | |
| a2 | | # | | |
| | | | | |
| d | | #4 | 5'-5" | |
| | | | | |
| h | | # | | |
| h1 | | # | | |
| h2 | | # | | |
| h3 | | #4 | | |
| h4 | | # | | |
| h6 | | #4 | | |
| h9 | | # | | |
| | | | | |
| n(E) | | # | | |
| | | | | |
| s | | # | | |
| s1 | | # | | |
| | | | | |
| t | | # | | |
| | | | | |
| v | | # | | |
| v1 | | # | | |
| v3 | | # | | |
| v4 | | # | | |
| v5 | | # | | |
| | | | | |
| w | | #5 | | |
| w1 | | #5 | | |
| | | | | |
| | | | | |
| Concrete Box Culverts | | | Cu. Yd. | |
| Reinforcement Bars | | | Pound | |
| Reinforcement Bars, Epoxy Coated | | | Pound | |

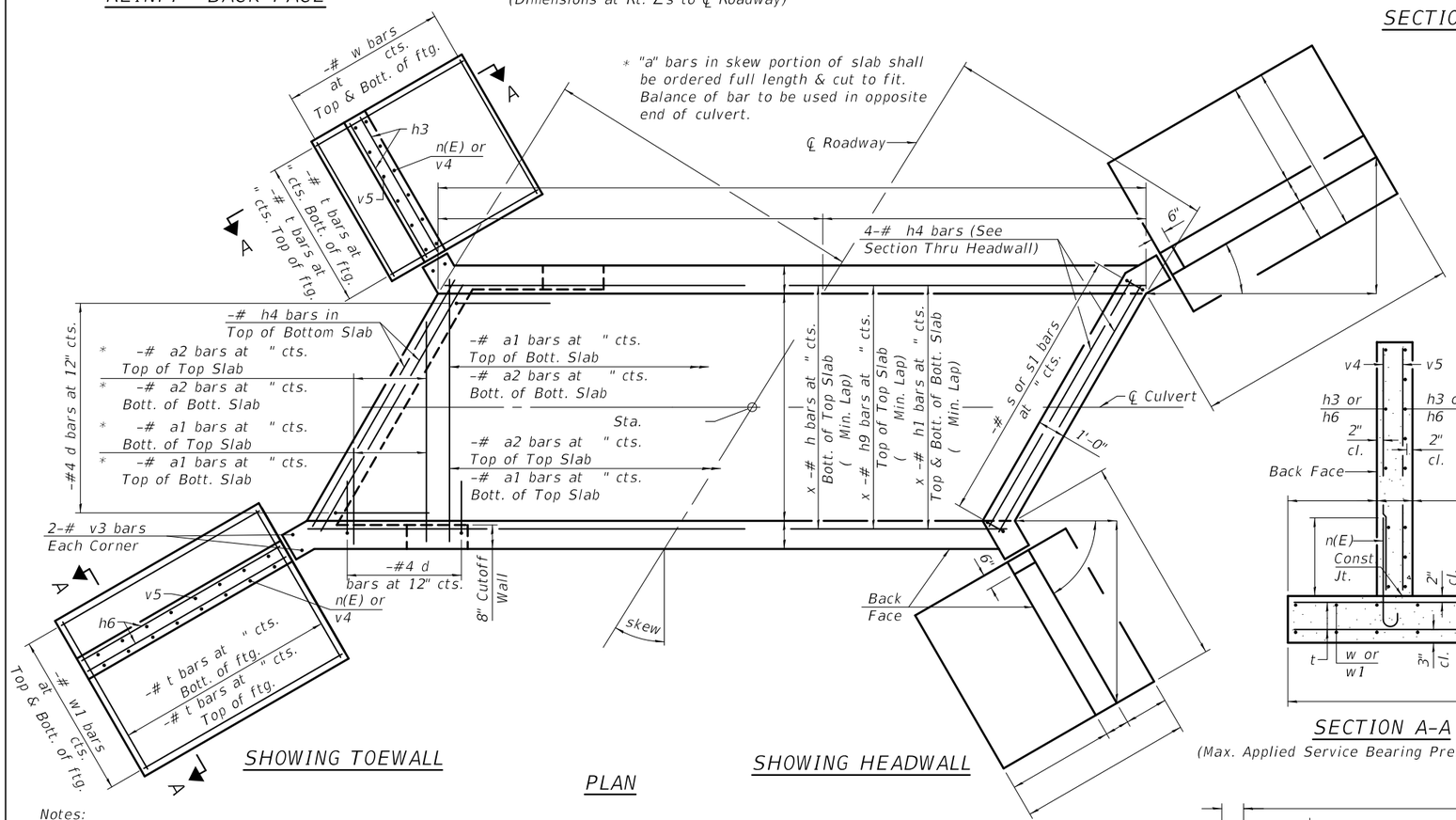


SHOWING TOEWALL

PLAN

SHOWING HEADWALL

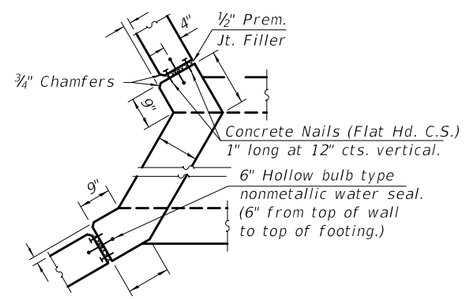


CORNER DETAIL




SECTION A-A

(Max. Applied Service Bearing Pressure = ksf)

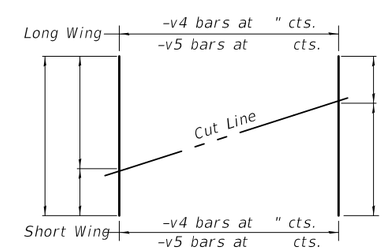


FIELD CUTTING DIAGRAM

Order bars shown full length. Cut as shown and use remainder of bars in opposite wingwall.

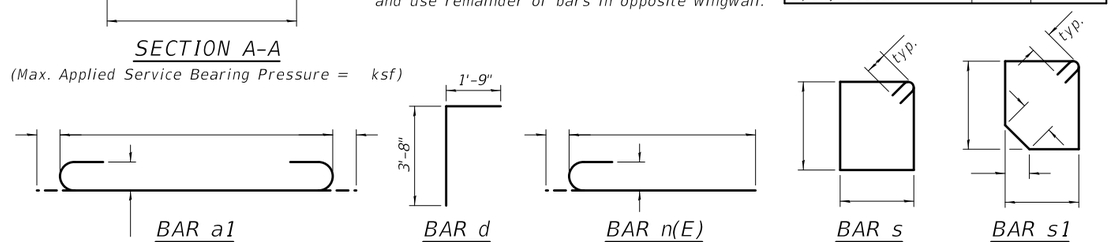


BAR a1 BAR d BAR n(E) BAR s BAR s1

Notes:

Bars indicated thus 12 x 4-#5 etc. indicates 12 lines of bars with 4 lengths per line.

At the Contractor's option, a longer v1 bar may be ordered to replace the v bar. No reduction in quantities shall be made for this substitution.

TSA-SB-TT-RS 2-17-2017

| FILE NAME = | USER NAME = | DESIGNED - | REVISED - | STATE OF ILLINOIS DEPARTMENT OF TRANSPORTATION | CULVERT DETAILS STRUCTURE NO. | F.A. RTE. | SECTION | COUNTY | TOTAL SHEETS | SHEET NO. |
|---|---|---|---|---|---|---|---|---|---|---|
| | | CHECKED - | REVISED - | | | | | | | |
| | PLOT SCALE = | DRAWN - | REVISED - | | | | | CONTRACT NO. | | |
| | PLOT DATE = | CHECKED - | REVISED - | | | | ILLINOIS | FED. AID PROJECT | | |

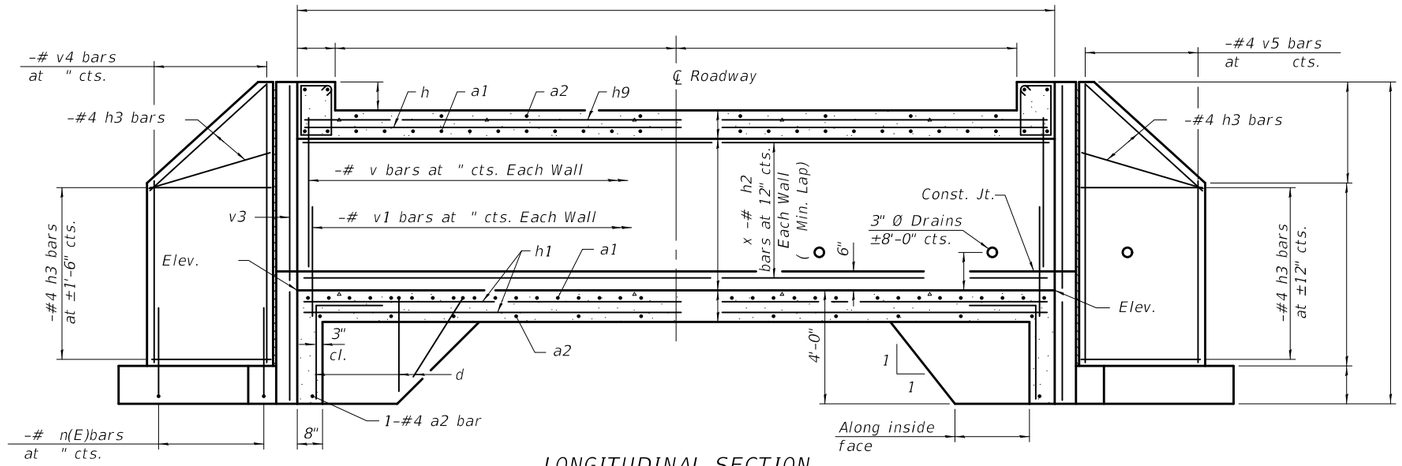


REINF. - BACK FACE

LONGITUDINAL SECTION

REINF. - FRONT FACE

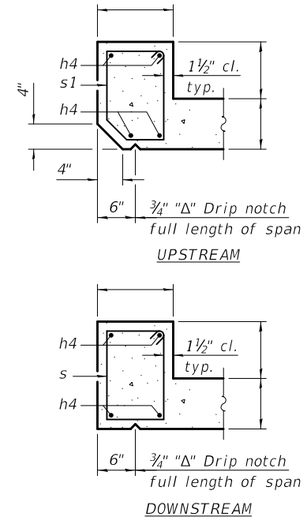


SECTION THRU HEADWALL

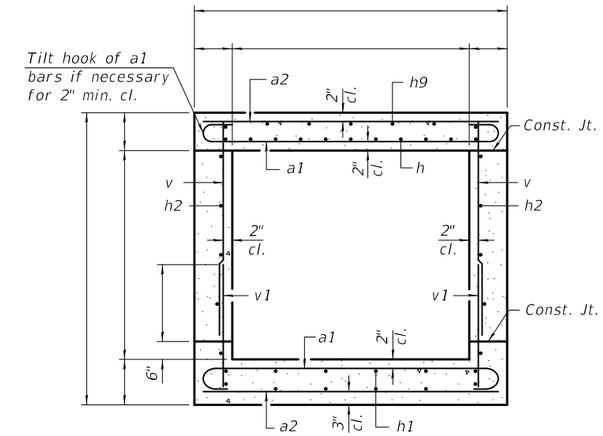


SECTION THRU BARREL

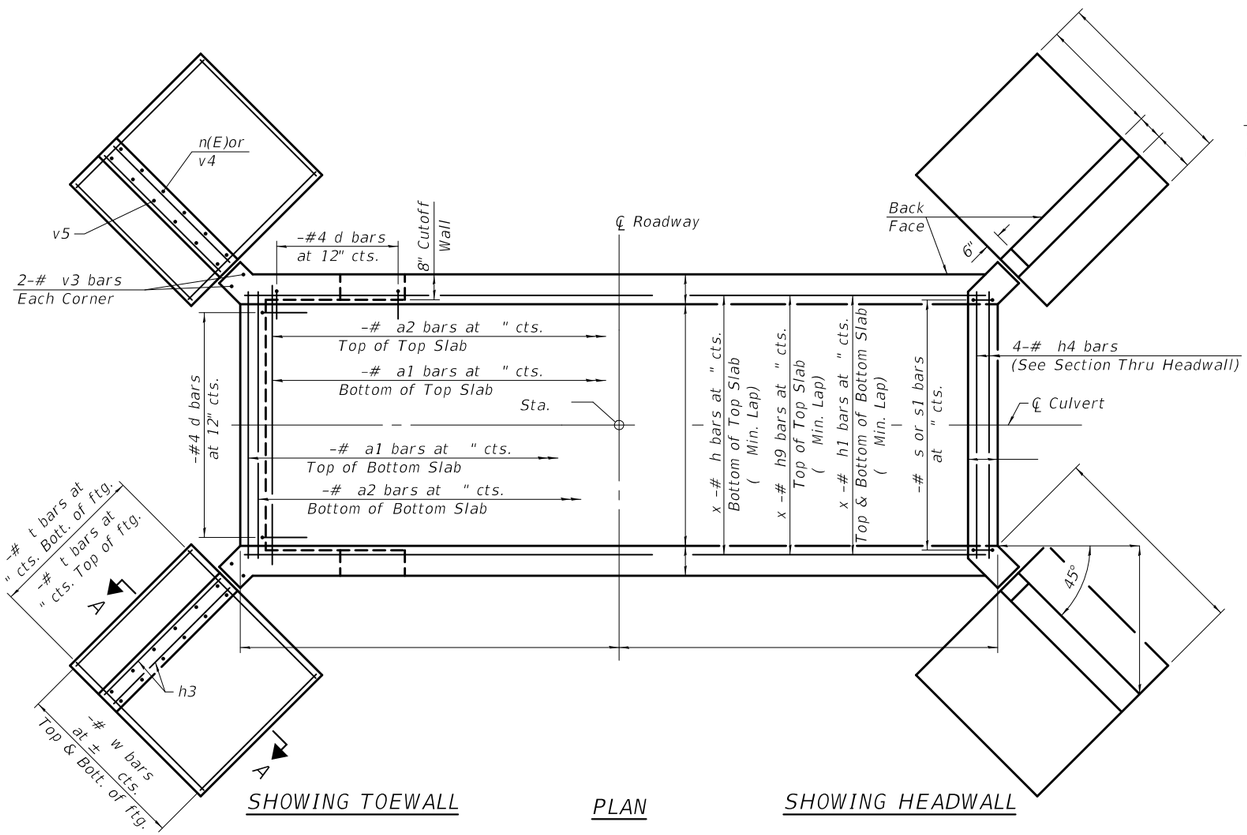


SHOWING TOEWALL

PLAN

SHOWING HEADWALL

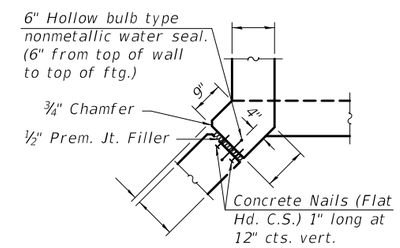


CORNER DETAIL

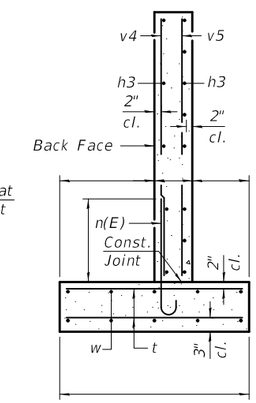


SECTION A-A

(Max. Applied Service Bearing Pressure = ksf)

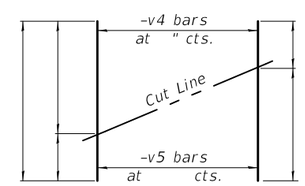


FIELD CUTTING DIAGRAM

Order bars shown full length. Cut as shown
and use remainder of bars in opposite wingwall.

BILL OF MATERIAL

| Bar No. | Size | Length | Shape |
|---|---|---|---|
| | | | |
| a1 | # | | |
| a2 | # | | |
| | | | |
| d | #4 | 5'-5" | |
| | | | |
| h | # | | |
| h1 | # | | |
| h2 | # | | |
| h3 | #4 | | |
| h4 | # | | |
| h9 | # | | |
| | | | |
| n(E) | # | | |
| | | | |
| s | # | | |
| s1 | # | | |
| | | | |
| t | # | | |
| | | | |
| v | # | | |
| v1 | # | | |
| v3 | # | | |
| v4 | # | | |
| v5 | # | | |
| | | | |
| w | #5 | | |
| | | | |
| Concrete Box Culverts | Cu. Yd. | | |
| Reinforcement Bars | Pound | | |
| Reinforcement Bars, Epoxy Coated | Pound | | |

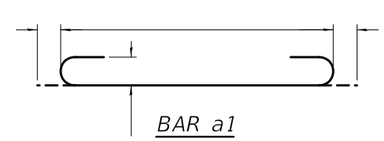

BAR a1

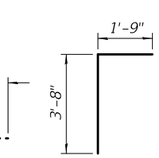


BAR d

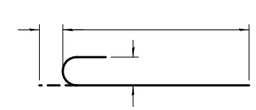

BAR n(E)

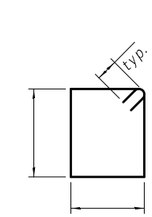


BAR s

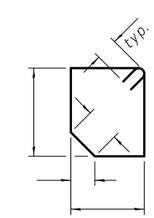


BAR s1

Notes:

Bars indicated thus 12 x 4-#5 etc. indicates 12 lines of bars with 4 lengths per line.

At the Contractor's option, a longer v1 bar may be ordered to replace the v bar. No reduction in quantities shall be made for this substitution.

TSA-SB-TT-ZS 2-17-2017

| | | | |
|---|---|---|---|
| FILE NAME = | USER NAME = | DESIGNED - | REVISED - |
| | | CHECKED - | REVISED - |
| | PLOT SCALE = | DRAWN - | REVISED - |
| | PLOT DATE = | CHECKED - | REVISED - |

STATE OF ILLINOIS
DEPARTMENT OF TRANSPORTATION

CULVERT DETAILS
STRUCTURE NO.

| F.A. RTE. | SECTION | COUNTY | TOTAL SHEETS | SHEET NO. |
|---|---|---|---|---|
| | | | | |
| | | CONTRACT NO. | | |
| | ILLINOIS FED. AID PROJECT | | | |

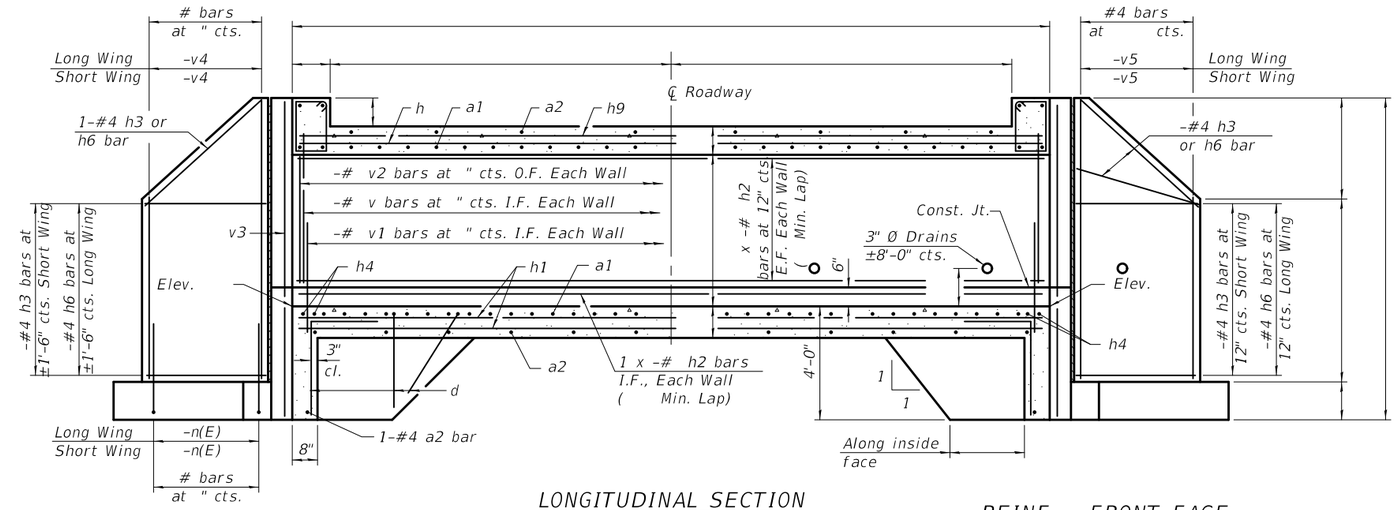


## LONGITUDINAL SECTION

(Dimensions at Rt. ∠'s to ℄ Roadway)

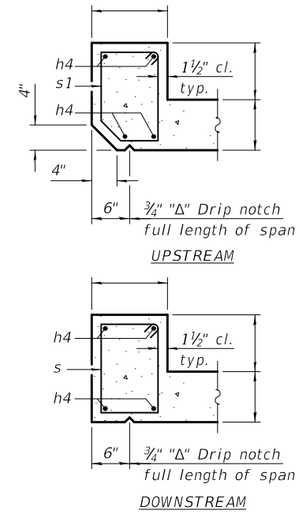


## SECTION THRU HEADWALL

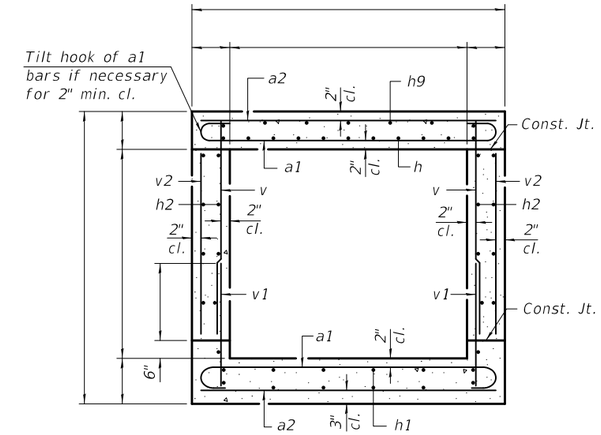


## SECTION THRU BARREL

## REINF. - BACK FACE

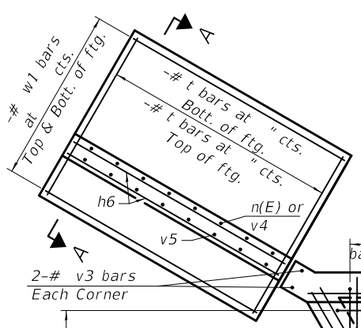


## REINF. - FRONT FACE

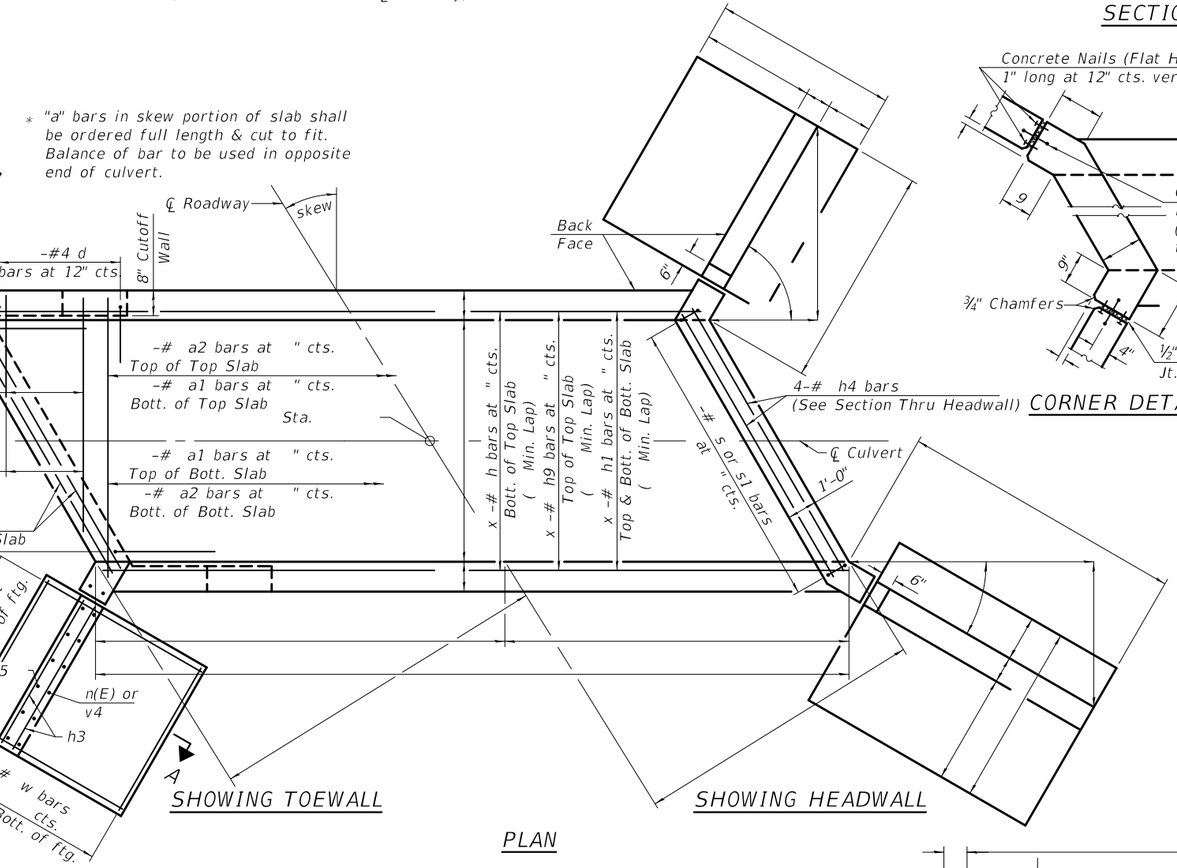


## SHOWING TOEWALL

## SHOWING HEADWALL

## PLAN

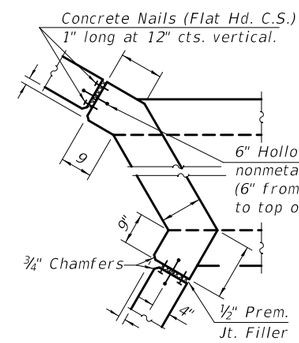


## CORNER DETAIL

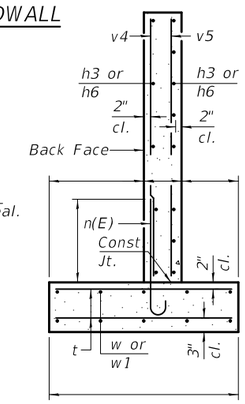


## SECTION A-A

(Max. Applied Service Bearing Pressure = ksf)

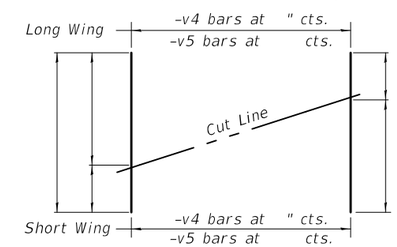


## FIELD CUTTING DIAGRAM

Order bars shown full length. Cut as shown and use remainder of bars in opposite wingwall.

## BILL OF MATERIAL

| Bar | No. | Size | Length | Shape |
|---|---|---|---|---|
| a1 | | # | | |
| a2 | | # | | |
| d | | #4 | 5'-5" | |
| h | | # | | |
| h1 | | # | | |
| h2 | | # | | |
| h3 | | #4 | | |
| h4 | | # | | |
| h6 | | #4 | | |
| h9 | | # | | |
| n(E) | | # | | |
| s | | # | | |
| s1 | | # | | |
| t | | # | | |
| v | | # | | |
| v1 | | # | | |
| v2 | | # | | |
| v3 | | # | | |
| v4 | | # | | |
| v5 | | # | | |
| w | | #5 | | |
| w1 | | #5 | | |
| Concrete Box Culverts | | | Cu. Yd. | |
| Reinforcement Bars | | | Pound | |
| Reinforcement Bars, Epoxy Coated | | | Pound | |

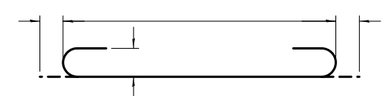

BAR a1

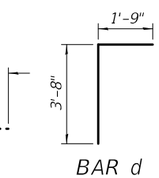


BAR d

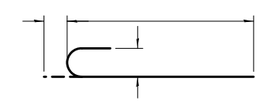

BAR n(E)

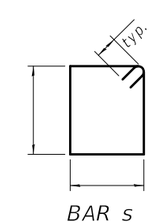


BAR s

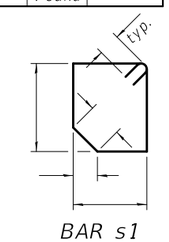


BAR s1

Notes:

Bars indicated thus 12 x 4-#5 etc. indicates 12 lines of bars with 4 lengths per line.

At the Contractor's option, a longer v1 bar may be ordered to replace the v bar. No reduction in quantities shall be made for this substitution.

TSA-SC-TT-LS 2-17-2017

| | | | |
|---|---|---|---|
| FILE NAME = | USER NAME = | DESIGNED - | REVISED - |
| | | CHECKED - | REVISED - |
| | PLOT SCALE = | DRAWN - | REVISED - |
| | PLOT DATE = | CHECKED - | REVISED - |

STATE OF ILLINOIS
DEPARTMENT OF TRANSPORTATION

CULVERT DETAILS
STRUCTURE NO.

| F.A. RTE. | SECTION | COUNTY | TOTAL SHEETS | SHEET NO. |
|---|---|---|---|---|
| | | | | |

CONTRACT NO.

ILLINOIS FED. AID PROJECT

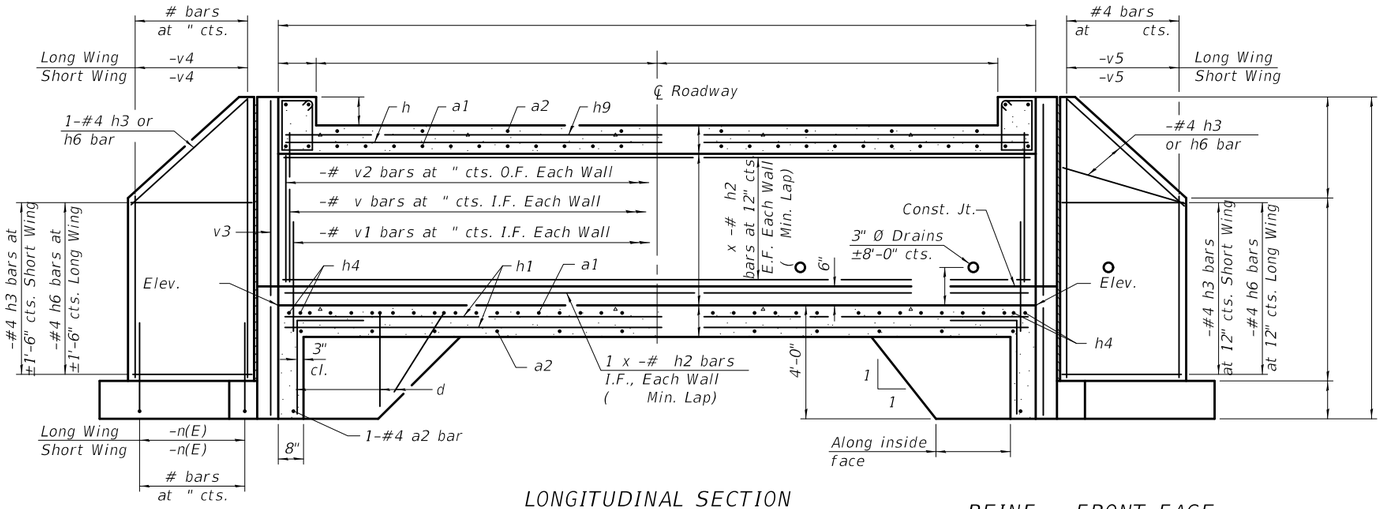


LONGITUDINAL SECTION

(Dimensions at Rt. ∠'s to ℄ Roadway)

REINF. - BACK FACE

REINF. - FRONT FACE

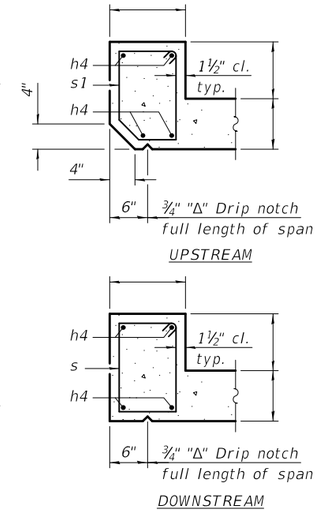


SECTION THRU HEADWALL

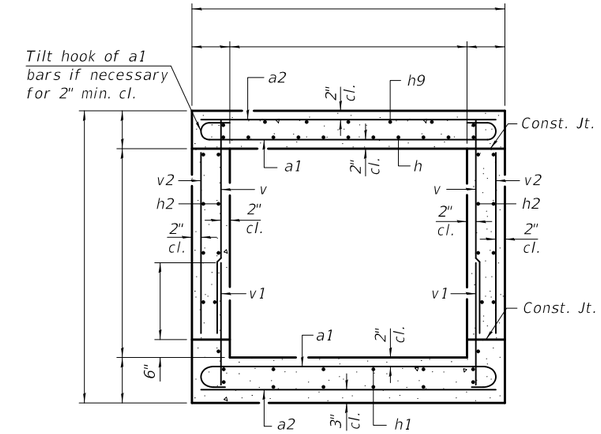


SECTION THRU BARREL

BILL OF MATERIAL

| Bar | No. | Size | Length | Shape |
|---|---|---|---|---|
| a1 | | # | | |
| a2 | | # | | |
| d | | #4 | 5'-5" | |
| h | | # | | |
| h1 | | # | | |
| h2 | | # | | |
| h3 | | #4 | | |
| h4 | | # | | |
| h6 | | #4 | | |
| h9 | | # | | |
| n(E) | | # | | |
| s | | # | | |
| s1 | | # | | |
| t | | # | | |
| v | | # | | |
| v1 | | # | | |
| v2 | | # | | |
| v3 | | # | | |
| v4 | | # | | |
| v5 | | # | | |
| w | | #5 | | |
| w1 | | #5 | | |
| Concrete Box Culverts | | Cu. Yd. | | |
| Reinforcement Bars | | Pound | | |
| Reinforcement Bars, Epoxy Coated | | Pound | | |

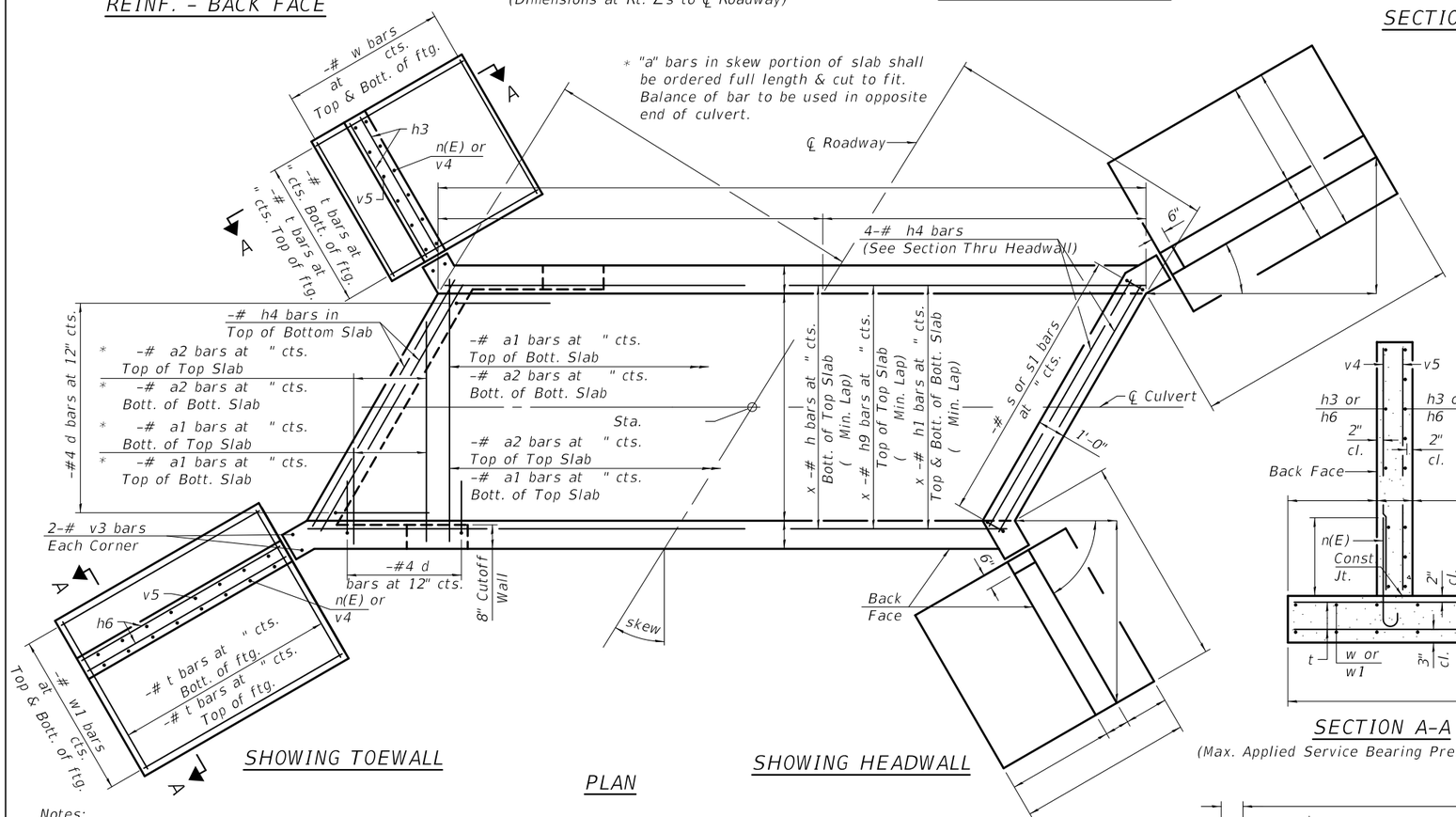


SHOWING TOEWALL

PLAN

SHOWING HEADWALL

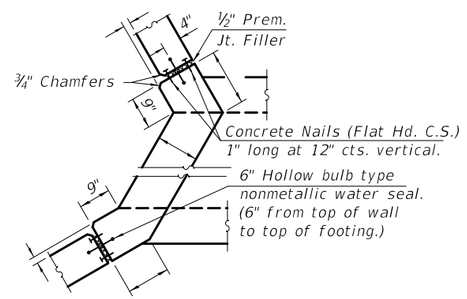


CORNER DETAIL




SECTION A-A

(Max. Applied Service Bearing Pressure = ksf)

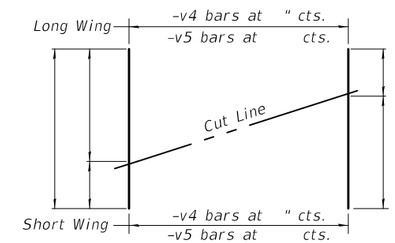


FIELD CUTTING DIAGRAM

Order bars shown full length. Cut as shown and use remainder of bars in opposite wingwall.

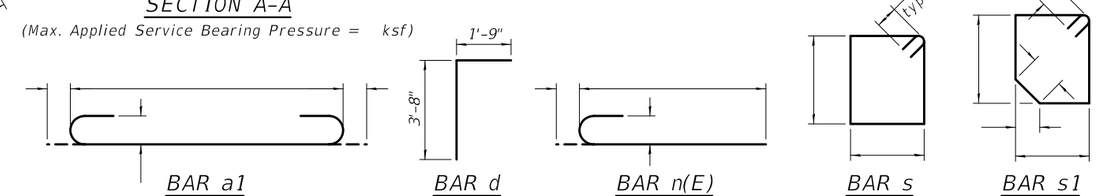


BAR a1 BAR d BAR n(E) BAR s BAR s1

Notes:

Bars indicated thus 12 x 4-#5 etc. indicates 12 lines of bars with 4 lengths per line.

At the Contractor's option, a longer v1 bar may be ordered to replace the v bar. No reduction in quantities shall be made for this substitution.

TSA-SC-TT-RS 2-17-2017

| | | | |
|---|---|---|---|
| FILE NAME = | USER NAME = | DESIGNED - | REVISED - |
| | | CHECKED - | REVISED - |
| | PLOT SCALE = | DRAWN - | REVISED - |
| | PLOT DATE = | CHECKED - | REVISED - |

STATE OF ILLINOIS
DEPARTMENT OF TRANSPORTATION

CULVERT DETAILS
STRUCTURE NO.

| F.A. RTE. | SECTION | COUNTY | TOTAL SHEETS | SHEET NO. |
|---|---|---|---|---|
| | | | | |

CONTRACT NO.

ILLINOIS FED. AID PROJECT

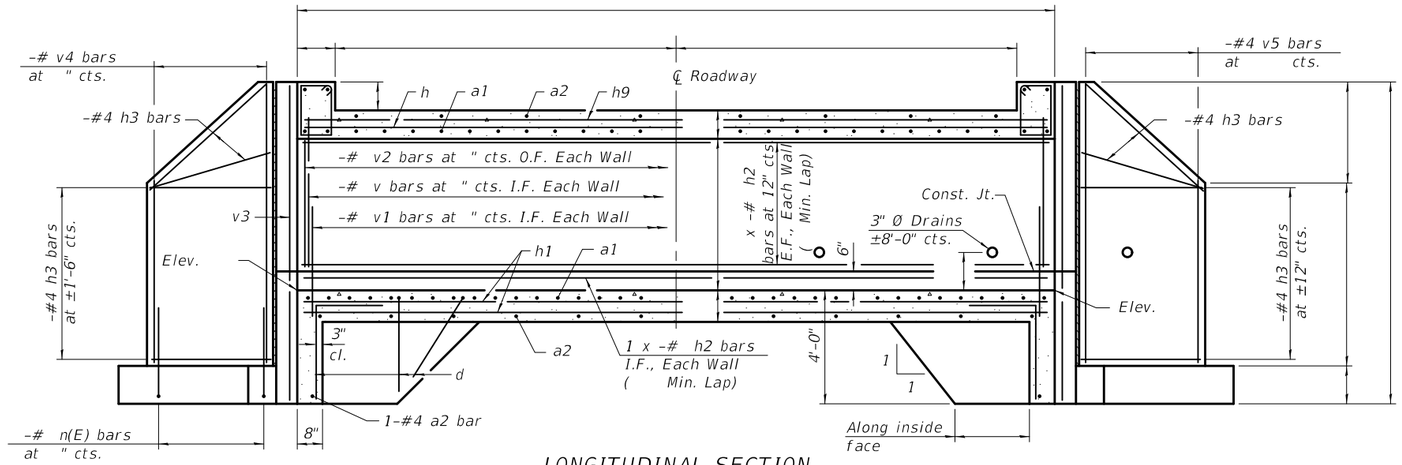


REINF. - BACK FACE

LONGITUDINAL SECTION

REINF. - FRONT FACE

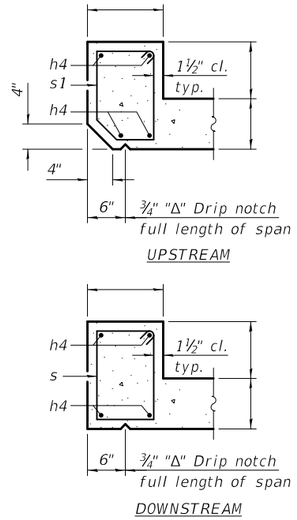


SECTION THRU HEADWALL

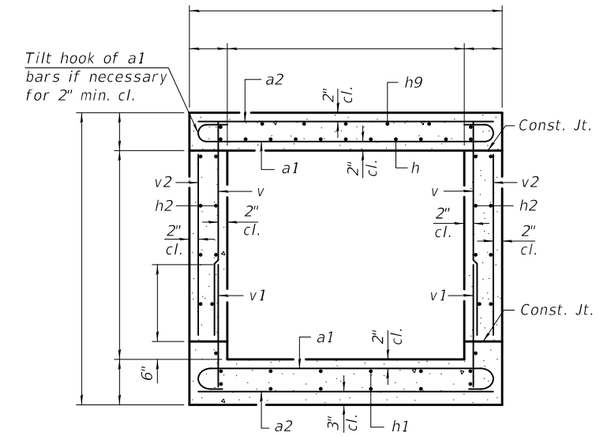


SECTION THRU BARREL

## BILL OF MATERIAL

| Bar | No. | Size | Length | Shape |
|---|---|---|---|---|
| | | | | |
| a1 | | # | | |
| a2 | | # | | |
| | | | | |
| d | | #4 | 5'-5" | |
| | | | | |
| h | | # | | |
| h1 | | # | | |
| h2 | | # | | |
| h3 | | #4 | | |
| h4 | | # | | |
| h9 | | # | | |
| | | | | |
| n(E) | | # | | |
| | | | | |
| s | | # | | |
| s1 | | # | | |
| | | | | |
| t | | # | | |
| | | | | |
| v | | # | | |
| v1 | | # | | |
| v2 | | # | | |
| v3 | | # | | |
| v4 | | # | | |
| v5 | | # | | |
| | | | | |
| w | | #5 | | |
| | | | | |
| | | | | |
| Concrete Box Culverts | | | Cu. Yd. | |
| Reinforcement Bars | | | Pound | |
| Reinforcement Bars, Epoxy Coated | | | Pound | |

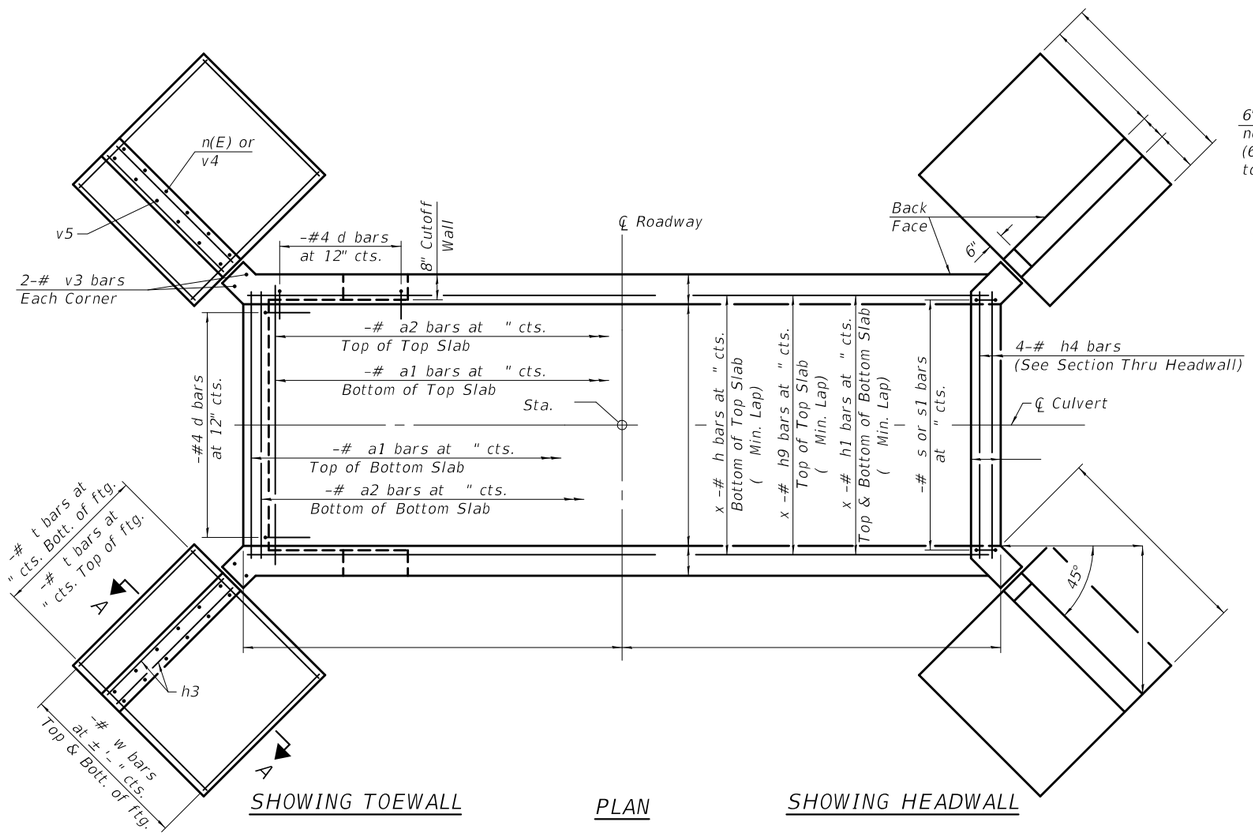


SHOWING TOEWALL

PLAN

SHOWING HEADWALL

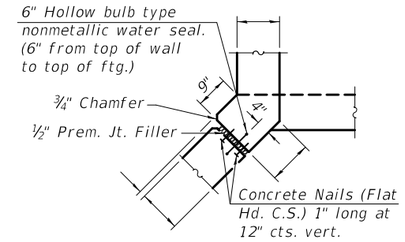


CORNER DETAIL

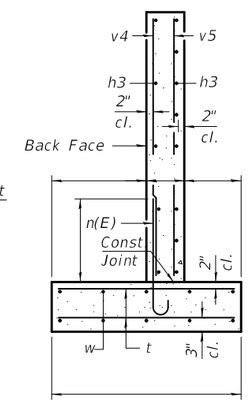


SECTION A-A

(Max. Applied Service Bearing Pressure = ksf)

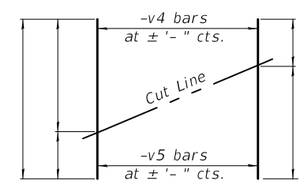


FIELD CUTTING DIAGRAM

Order bars shown full length. Cut as shown and use remainder of bars in opposite wingwall.

Notes:

Bars indicated thus 12 x 4-#5 etc. indicates 12 lines of bars with 4 lengths per line.

At the Contractor's option, a longer v1 bar may be ordered to replace the v bar. No reduction in quantities shall be made for this substitution.

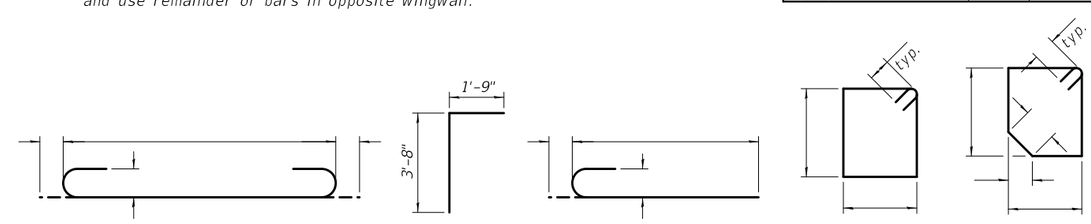


BAR a1 BAR d BAR n(E) BAR s BAR s1

TSA-SC-TT-ZS 2-17-2017

| FILE NAME = | USER NAME = | DESIGNED - | REVISED - | STATE OF ILLINOIS DEPARTMENT OF TRANSPORTATION | CULVERT DETAILS STRUCTURE NO. | F.A. RTE. | SECTION | COUNTY | TOTAL SHEETS | SHEET NO. |
|---|---|---|---|---|---|---|---|---|---|---|
| | | CHECKED - | REVISED - | | | | | | | |
| | PLOT SCALE = | DRAWN - | REVISED - | | | | | CONTRACT NO. | | |
| | PLOT DATE = | CHECKED - | REVISED - | | | | ILLINOIS | FED. AID PROJECT | | |

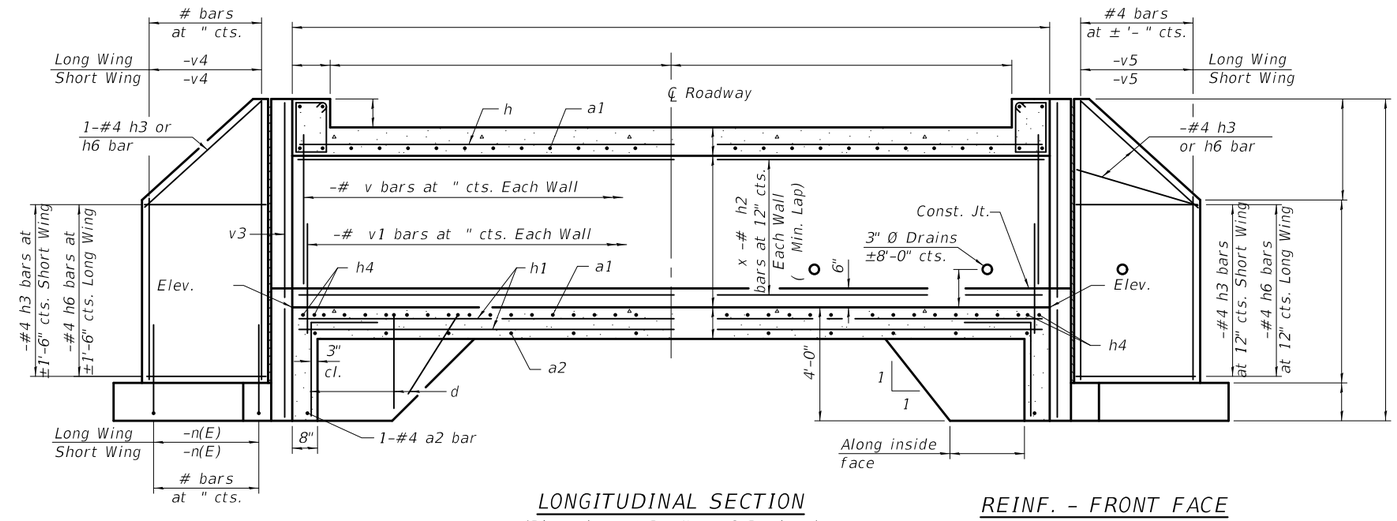


LONGITUDINAL SECTION

(Dimensions at Rt. ∠'s to ℄ Roadway)

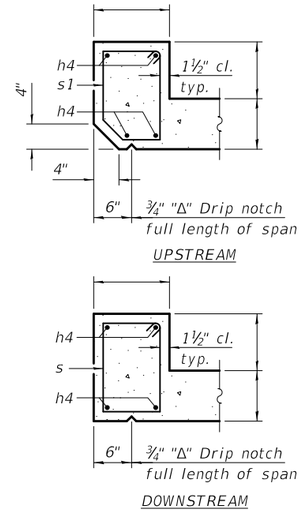


SECTION THRU HEADWALL

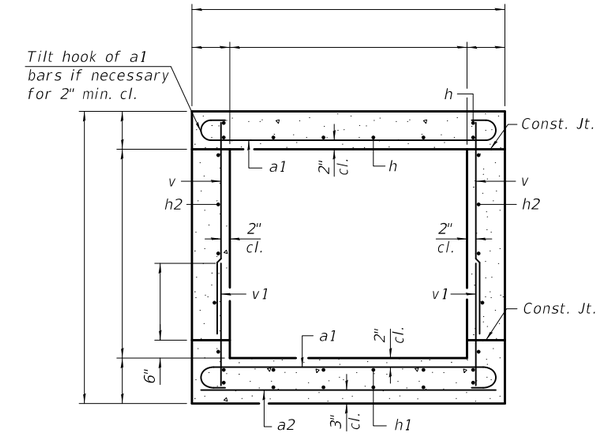


SECTION THRU BARREL

REINF. - BACK FACE

REINF. - FRONT FACE

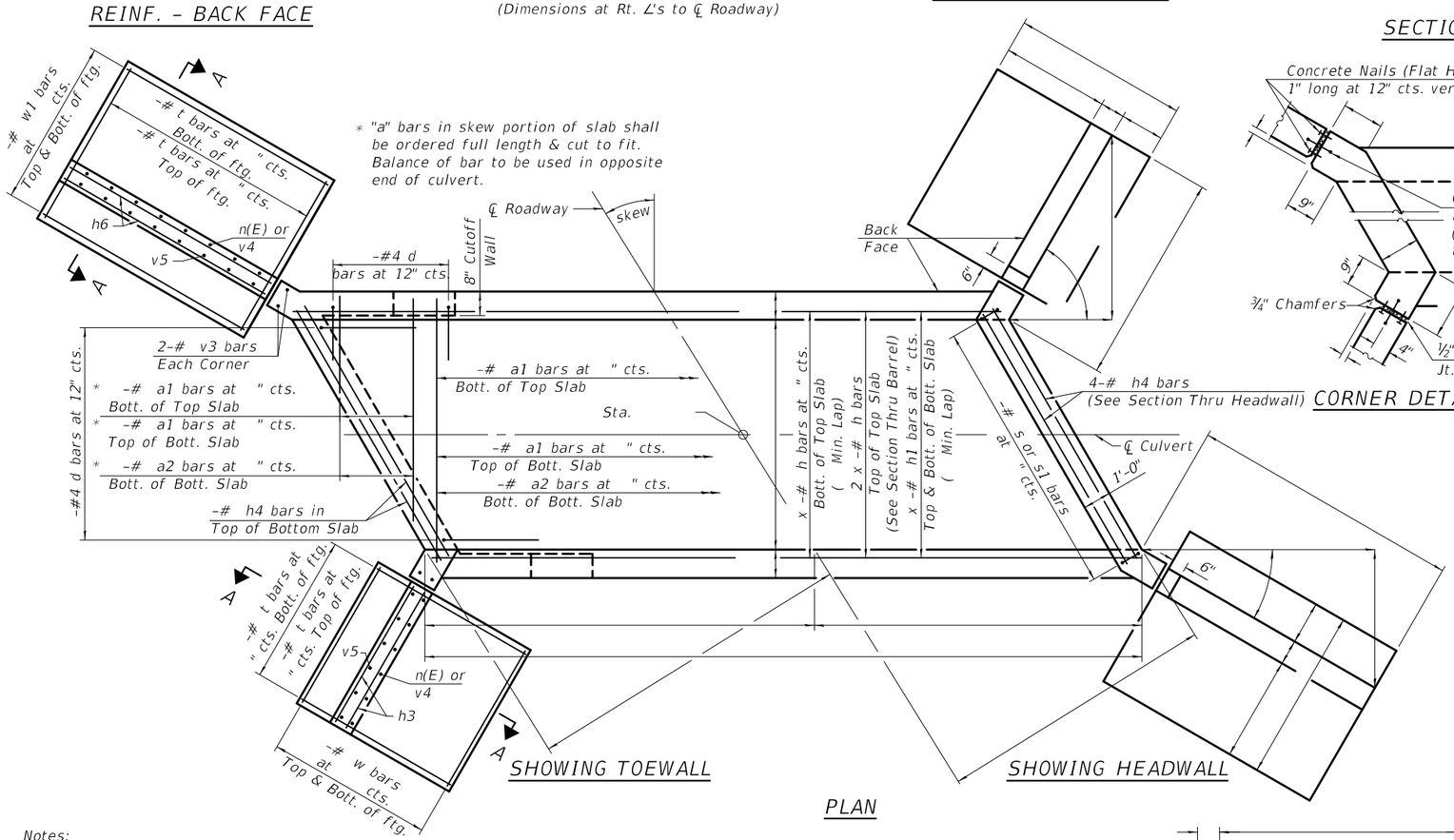


SHOWING TOEWALL

SHOWING HEADWALL

PLAN

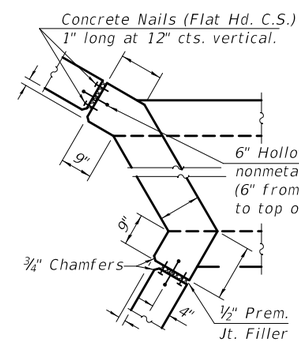


CORNER DETAIL

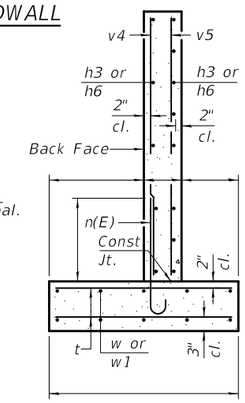


SECTION A-A

(Max. Applied Service Bearing Pressure = ksf)

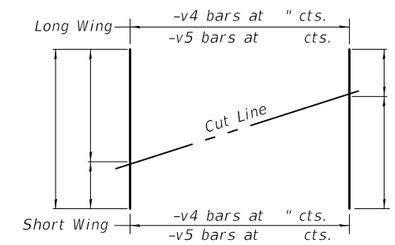


FIELD CUTTING DIAGRAM

Order bars shown full length. Cut as shown and use remainder of bars in opposite wingwall.

BILL OF MATERIAL

| Bar | No. | Size | Length | Shape |
|---|---|---|---|---|
| | | | | |
| a1 | | # | | |
| a2 | | # | | |
| | | | | |
| d | | #4 | 5'-5" | |
| | | | | |
| h | | # | | |
| h1 | | # | | |
| h2 | | # | | |
| h3 | | #4 | | |
| h4 | | # | | |
| h6 | | #4 | | |
| | | | | |
| n(E) | | # | | |
| | | | | |
| s | | # | | |
| s1 | | # | | |
| | | | | |
| t | | # | | |
| | | | | |
| v | | # | | |
| v1 | | # | | |
| v3 | | # | | |
| v4 | | # | | |
| v5 | | # | | |
| | | | | |
| w | | #5 | | |
| w1 | | #5 | | |
| | | | | |
| Concrete Box Culverts | | | Cu. Yd. | |
| Reinforcement Bars | | | Pound | |
| Reinforcement Bars, Epoxy Coated | | | Pound | |

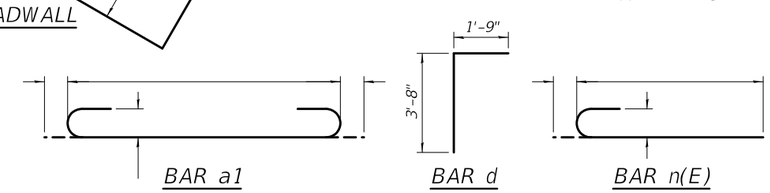


BAR a1 BAR d BAR n(E) BAR s BAR s1

Notes:

Bars indicated thus 12 x 4-#5 etc. indicates 12 lines of bars with 4 lengths per line.

At the Contractor's option, a longer v1 bar may be ordered to replace the v bar. No reduction in quantities shall be made for this substitution.

TSB-SB-TT-LS 2-17-2017

| FILE NAME = | USER NAME = | DESIGNED - | REVISED - | STATE OF ILLINOIS DEPARTMENT OF TRANSPORTATION | CULVERT DETAILS STRUCTURE NO. | F.A. RTE. | SECTION | COUNTY | TOTAL SHEETS | SHEET NO. |
|---|---|---|---|---|---|---|---|---|---|---|
| | | CHECKED - | REVISED - | | | | | | | |
| | PLOT SCALE = | DRAWN - | REVISED - | | | | | CONTRACT NO. | | |
| | PLOT DATE = | CHECKED - | REVISED - | | | | ILLINOIS | FED. AID PROJECT | | |

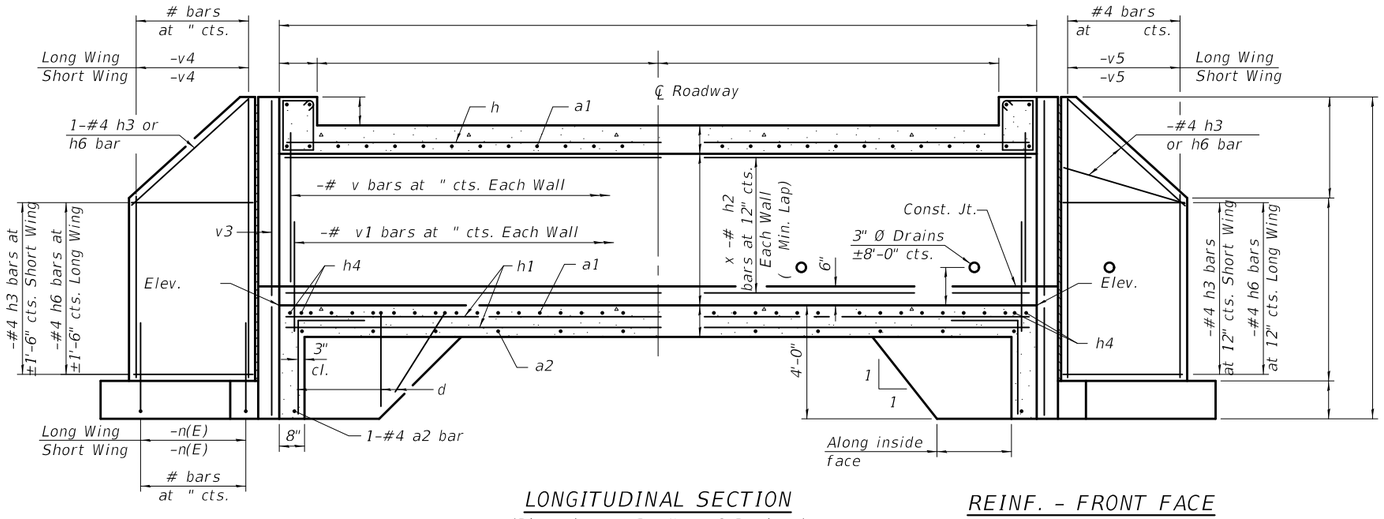


REINF. - BACK FACE

LONGITUDINAL SECTION

(Dimensions at Rt. ∠'s to ℄ Roadway)

REINF. - FRONT FACE

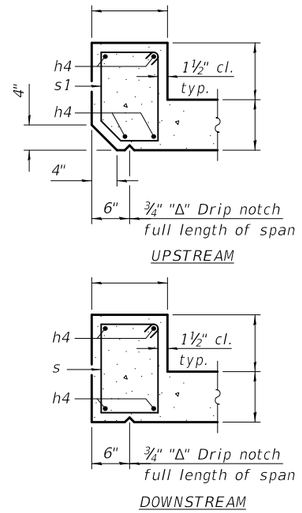


SECTION THRU HEADWALL

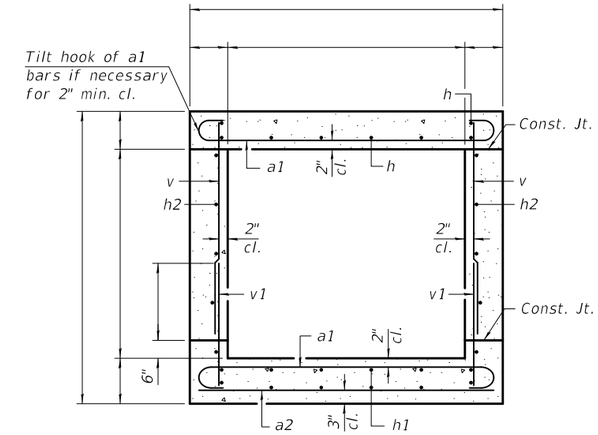


SECTION THRU BARREL

BILL OF MATERIAL

| Bar | No. | Size | Length | Shape |
|---|---|---|---|---|
| a1 | | # | | |
| a2 | | # | | |
| d | | #4 | 5'-5" | |
| h | | # | | |
| h1 | | # | | |
| h2 | | # | | |
| h3 | | #4 | | |
| h4 | | # | | |
| h6 | | #4 | | |
| n(E) | | # | | |
| s | | # | | |
| s1 | | # | | |
| t | | # | | |
| v | | # | | |
| v1 | | # | | |
| v3 | | # | | |
| v4 | | # | | |
| v5 | | # | | |
| w | | #5 | | |
| w1 | | #5 | | |
| Concrete Box Culverts | | | Cu. Yd. | |
| Reinforcement Bars | | | Pound | |
| Reinforcement Bars, Epoxy Coated | | | Pound | |

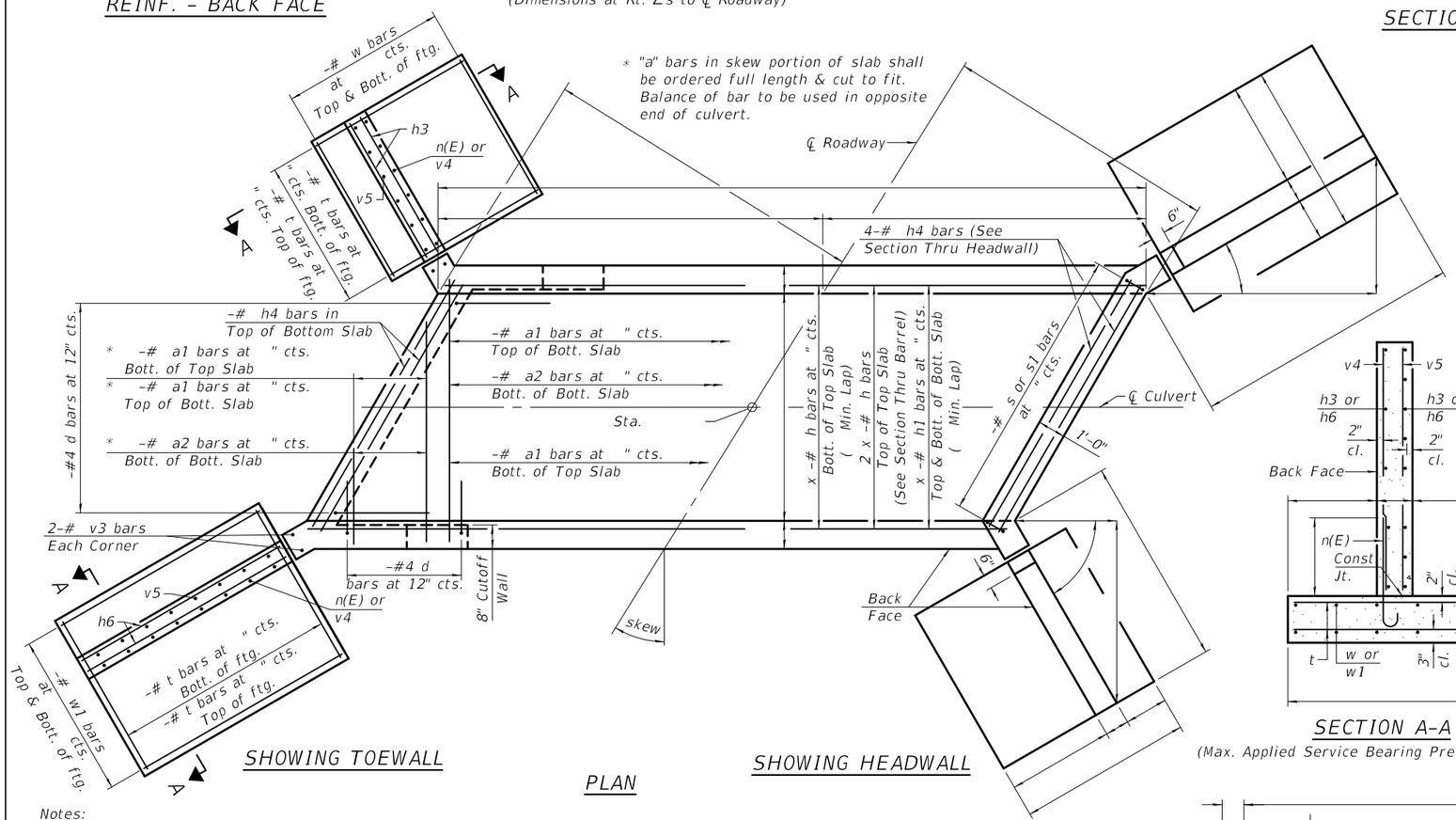


SHOWING TOEWALL

PLAN

SHOWING HEADWALL

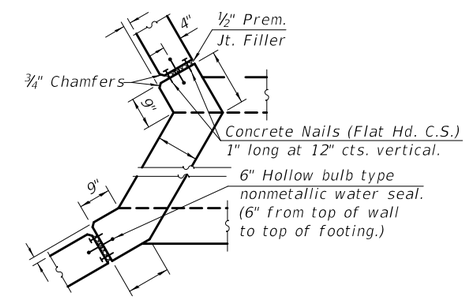


CORNER DETAIL

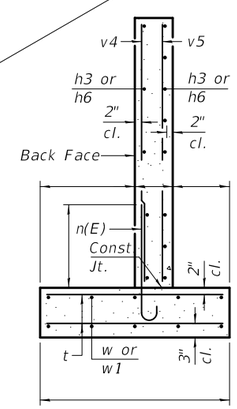


SECTION A-A

(Max. Applied Service Bearing Pressure = ksf)

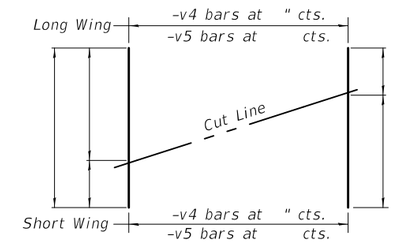


FIELD CUTTING DIAGRAM

Order bars shown full length. Cut as shown
and use remainder of bars in opposite wingwall.

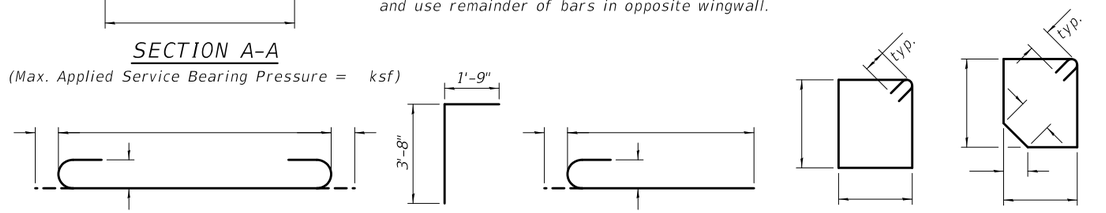


BAR a1 BAR d BAR n(E) BAR s BAR s1

Notes:

Bars indicated thus 12 x 4-#5 etc. indicates 12 lines of bars with 4 lengths per line.

At the Contractor's option, a longer v1 bar may be ordered to replace the v bar. No reduction in quantities shall be made for this substitution.

TSB-SB-TT-RS 2-17-2017

| | | | | | | | | |
|---|---|---|---|---|---|---|---|---|
| FILE NAME = | USER NAME = | DESIGNED - | REVISED - | STATE OF ILLINOIS DEPARTMENT OF TRANSPORTATION | CULVERT DETAILS STRUCTURE NO. | F.A. RTE. | SECTION | COUNTY | TOTAL SHEETS | SHEET NO. |
| | | CHECKED - | REVISED - | | | | | | | |
| | PLOT SCALE = | DRAWN - | REVISED - | | | CONTRACT NO. | | | | |
| | PLOT DATE = | CHECKED - | REVISED - | | | ILLINOIS | FED. AID PROJECT | | | |

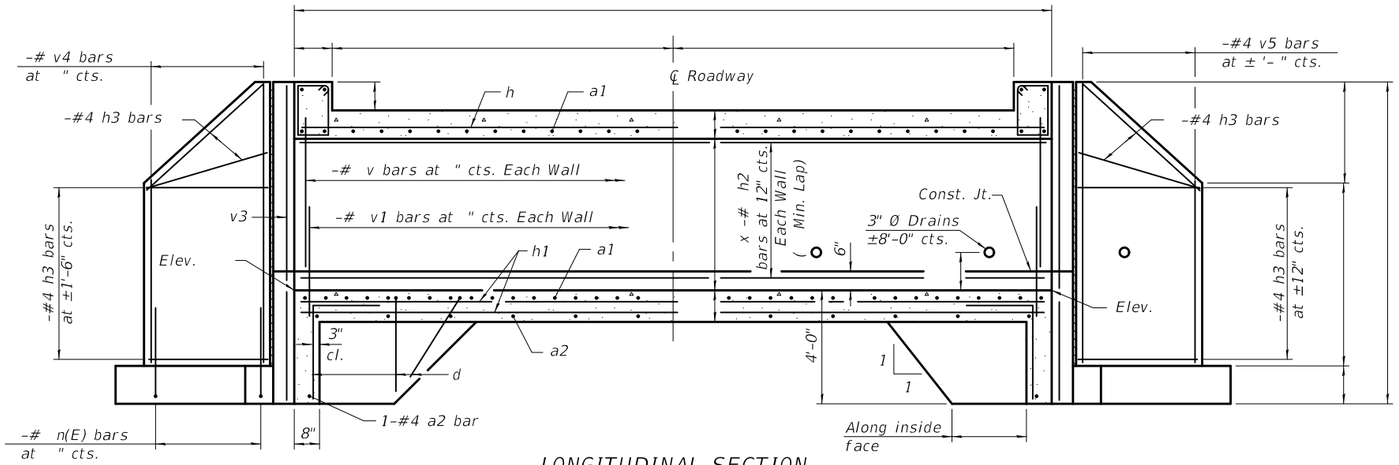


REINF. - BACK FACE

LONGITUDINAL SECTION

REINF. - FRONT FACE

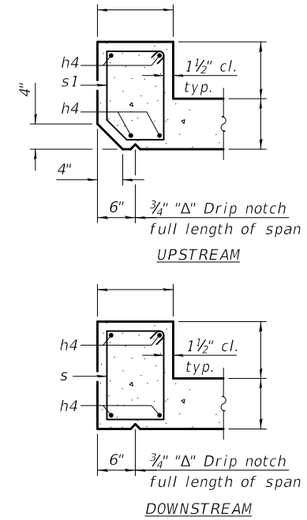


SECTION THRU HEADWALL

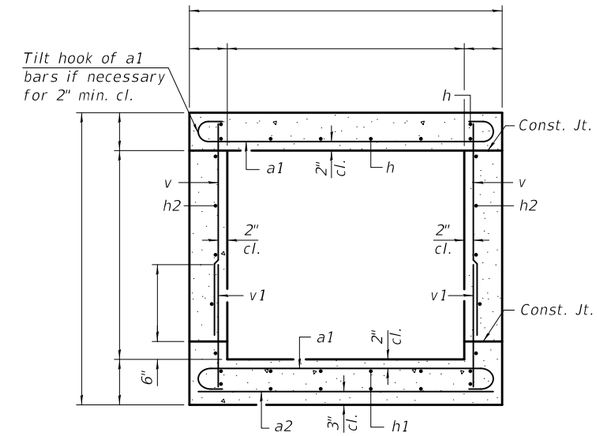


SECTION THRU BARREL

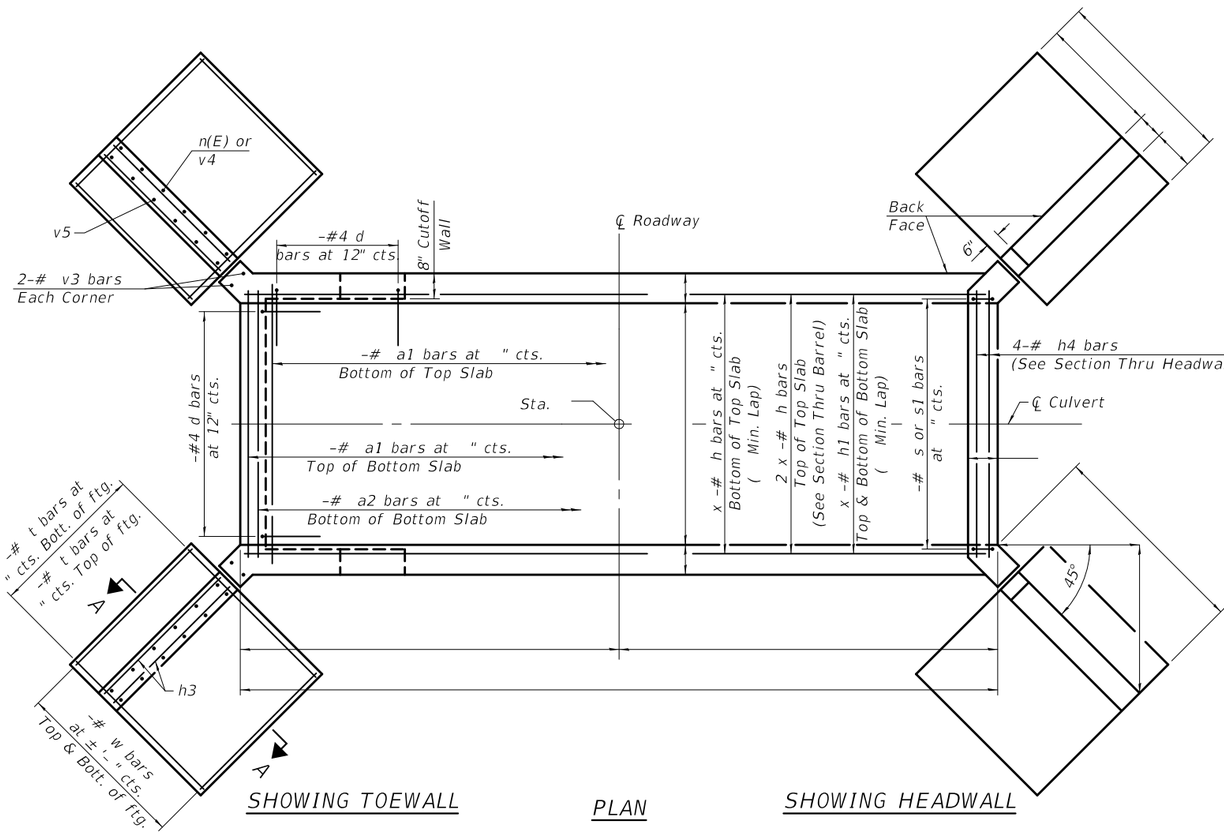


SHOWING TOEWALL

PLAN

SHOWING HEADWALL

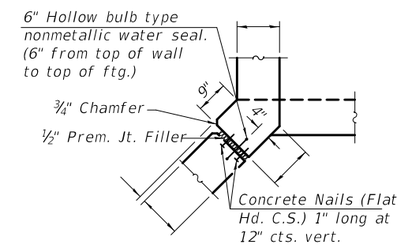


CORNER DETAIL

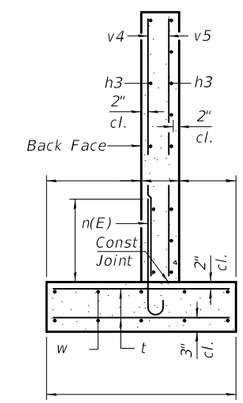


SECTION A-A

(Max. Applied Service Bearing Pressure = ksf)

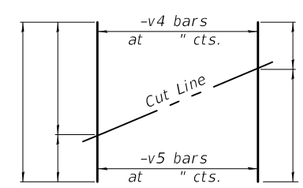


FIELD CUTTING DIAGRAM

Order bars shown full length. Cut as shown
and use remainder of bars in opposite wingwall.

BILL OF MATERIAL

| Bar | No. | Size | Length | Shape |
|---|---|---|---|---|
| | | | | |
| a1 | | # | | |
| a2 | | # | | |
| | | | | |
| d | | #4 | 5'-5" | |
| | | | | |
| h | | # | | |
| h1 | | # | | |
| h2 | | # | | |
| h3 | | #4 | | |
| h4 | | # | | |
| | | | | |
| n(E) | | # | | |
| | | | | |
| s | | # | | |
| s1 | | # | | |
| | | | | |
| t | | # | | |
| | | | | |
| v | | # | | |
| v1 | | # | | |
| v3 | | # | | |
| v4 | | # | | |
| v5 | | # | | |
| | | | | |
| w | | #5 | | |
| | | | | |
| | | | | |
| Concrete Box Culverts | | | Cu. Yd. | |
| Reinforcement Bars | | | Pound | |
| Reinforcement Bars, Epoxy Coated | | | Pound | |

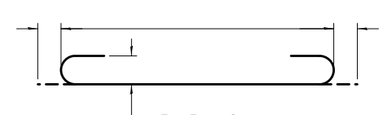

BAR a1

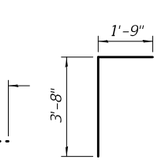


BAR d

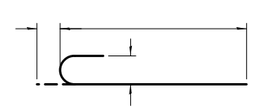

BAR n(E)

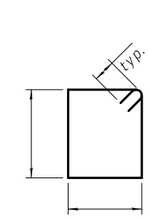


BAR s

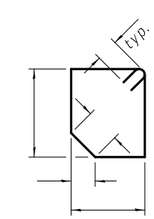


BAR s1

Notes:

Bars indicated thus 12 x 4-#5 etc. indicates 12 lines of bars with 4 lengths per line.

At the Contractor's option, a longer v1 bar may be ordered to replace the v bar. No reduction in quantities shall be made for this substitution.

TSB-SB-TT-ZS 2-17-2017

| | | | |
|---|---|---|---|
| FILE NAME = | USER NAME = | DESIGNED - | REVISED - |
| | | CHECKED - | REVISED - |
| | PLOT SCALE = | DRAWN - | REVISED - |
| | PLOT DATE = | CHECKED - | REVISED - |

STATE OF ILLINOIS
DEPARTMENT OF TRANSPORTATION

CULVERT DETAILS
STRUCTURE NO.

| F.A. RTE. | SECTION | COUNTY | TOTAL SHEETS | SHEET NO. |
|---|---|---|---|---|
| | | | | |

CONTRACT NO.

ILLINOIS FED. AID PROJECT

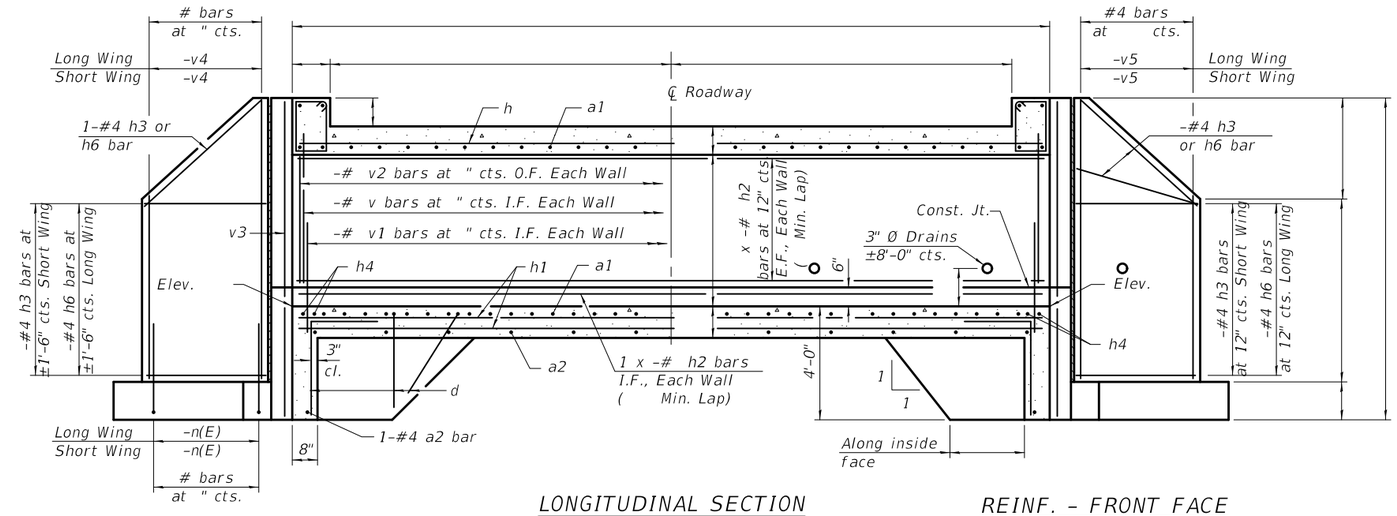


LONGITUDINAL SECTION

(Dimensions at Rt. ∠'s to ℄ Roadway)

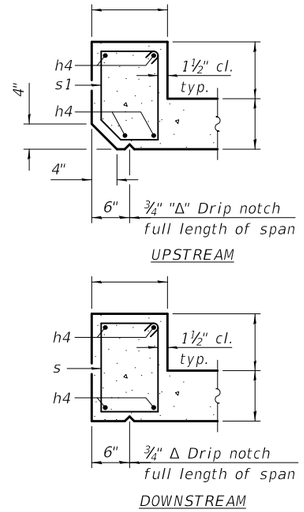


SECTION THRU HEADWALL

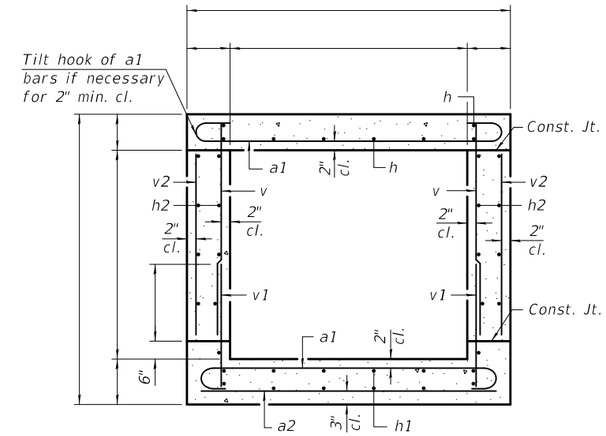


SECTION THRU BARREL

REINF. - BACK FACE

REINF. - FRONT FACE

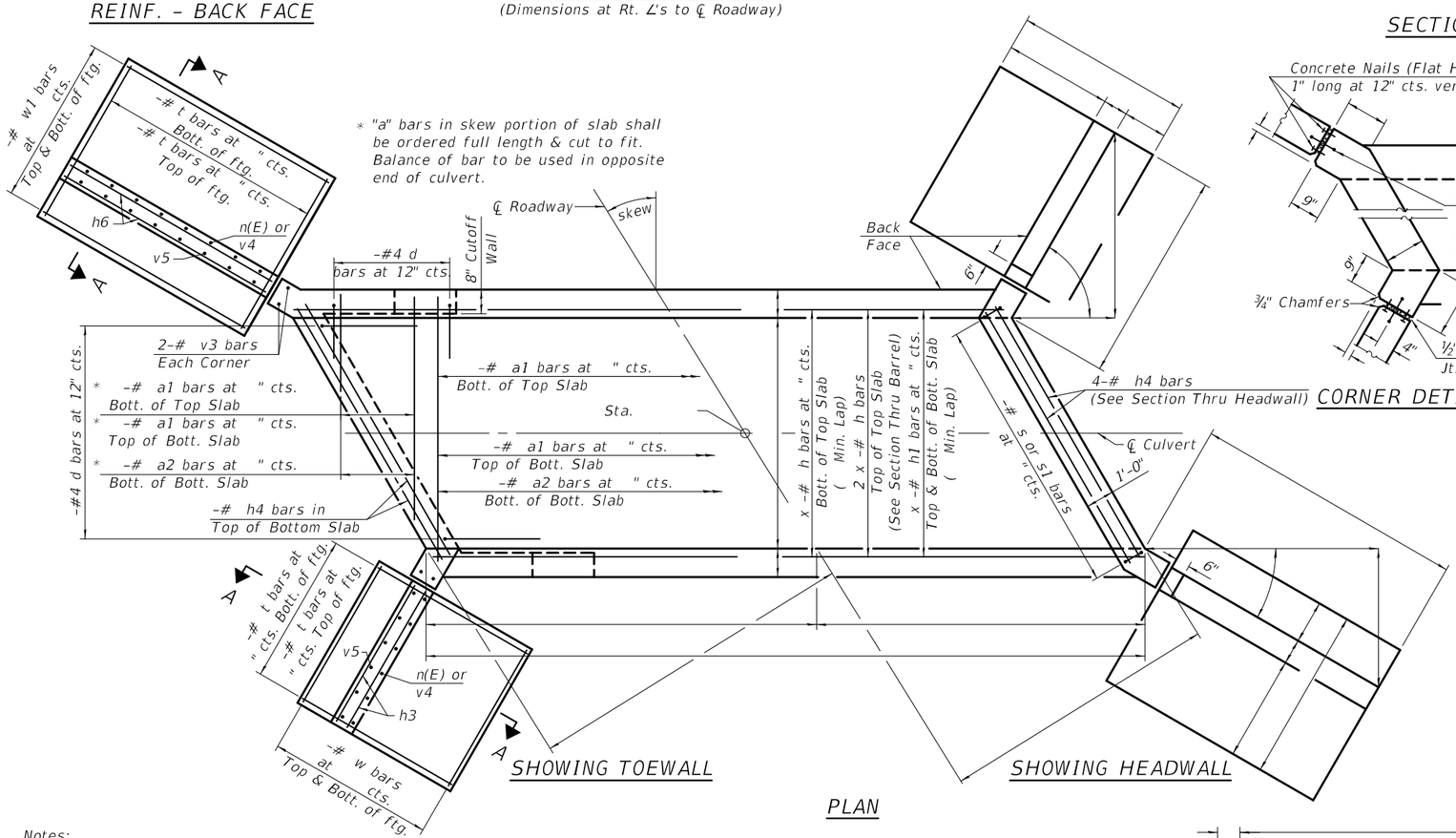


SHOWING TOEWALL

SHOWING HEADWALL

PLAN

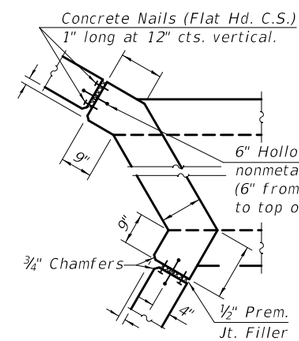


CORNER DETAIL

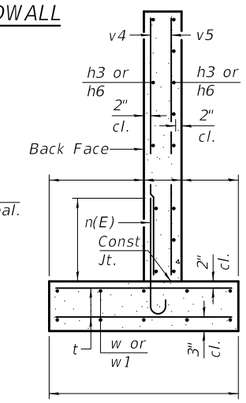


SECTION A-A

(Max. Applied Service Bearing Pressure = ksf)

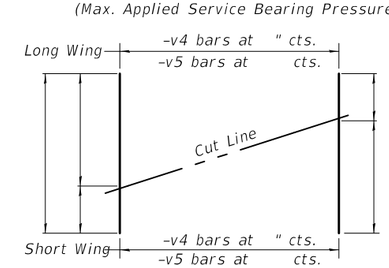


FIELD CUTTING DIAGRAM

Order bars shown full length. Cut as shown
and use remainder of bars in opposite wingwall.

BILL OF MATERIAL

| Bar | No. | Size | Length | Shape |
|---|---|---|---|---|
| a1 | | # | | |
| a2 | | # | | |
| d | | #4 | 5'-5" | |
| h | | # | | |
| h1 | | # | | |
| h2 | | # | | |
| h3 | | #4 | | |
| h4 | | # | | |
| h6 | | #4 | | |
| n(E) | | # | | |
| s | | # | | |
| s1 | | # | | |
| t | | # | | |
| v | | # | | |
| v1 | | # | | |
| v2 | | # | | |
| v3 | | # | | |
| v4 | | # | | |
| v5 | | # | | |
| w | | #5 | | |
| w1 | | #5 | | |
| Concrete Box Culverts | | | Cu. Yd. | |
| Reinforcement Bars | | | Pound | |
| Reinforcement Bars, Epoxy Coated | | | Pound | |

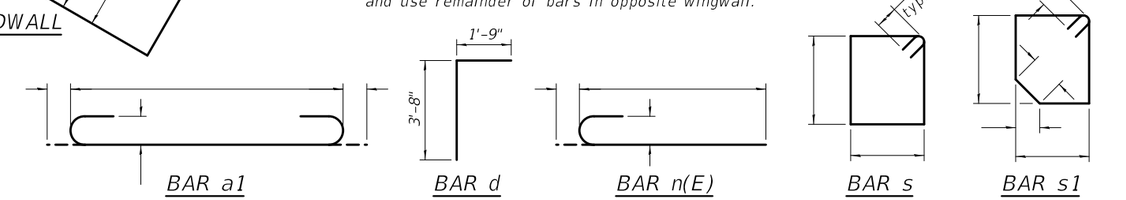


BAR a1 BAR d BAR n(E) BAR s BAR s1

Notes:

Bars indicated thus 12 x 4-#5 etc. indicates 12 lines of bars with 4 lengths per line.

At the Contractor's option, a longer v1 bar may be ordered to replace the v bar. No reduction in quantities shall be made for this substitution.

TSB-SC-TT-LS 2-17-2017

| FILE NAME = | USER NAME = | DESIGNED - | REVISED - |
|---|---|---|---|
| | | CHECKED - | REVISED - |
| | PLOT SCALE = | DRAWN - | REVISED - |
| | PLOT DATE = | CHECKED - | REVISED - |

STATE OF ILLINOIS
DEPARTMENT OF TRANSPORTATION

CULVERT DETAILS
STRUCTURE NO.

| F.A. RTE. | SECTION | COUNTY | TOTAL SHEETS | SHEET NO. |
|---|---|---|---|---|
| | | | | |

CONTRACT NO.

ILLINOIS FED. AID PROJECT

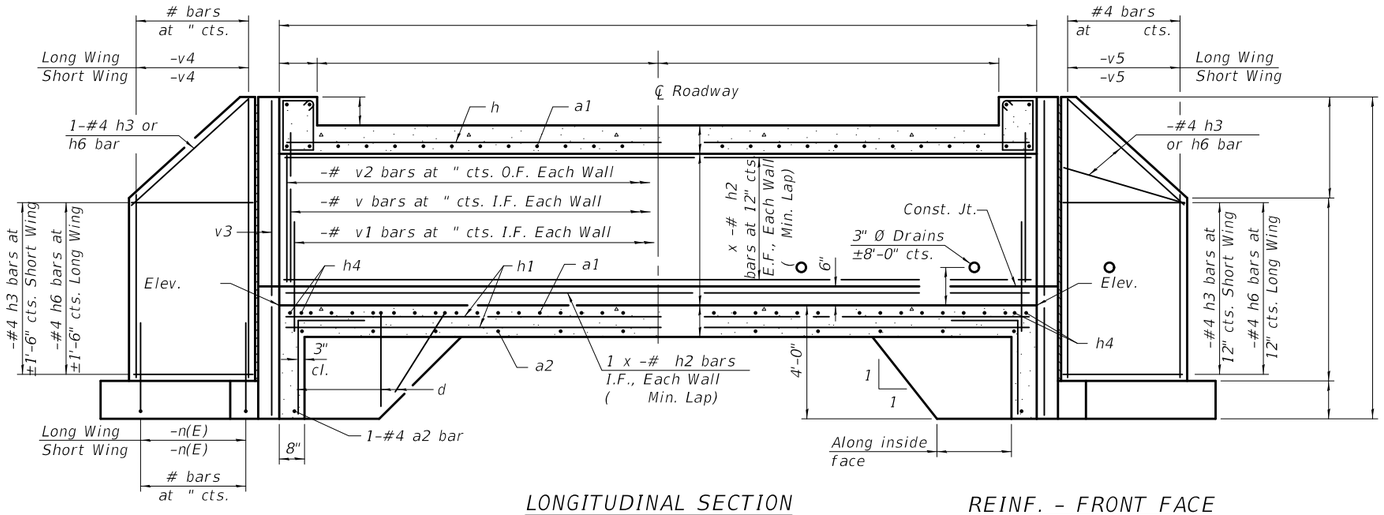


REINF. - BACK FACE

LONGITUDINAL SECTION

(Dimensions at Rt. ∠'s to ℄ Roadway)

REINF. - FRONT FACE

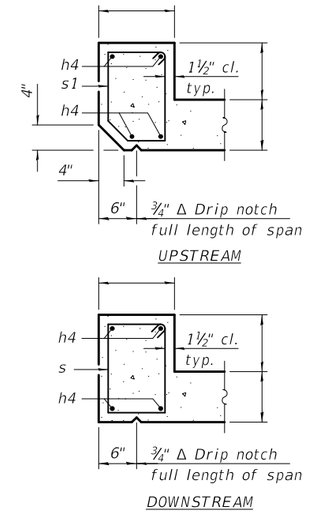


SECTION THRU HEADWALL

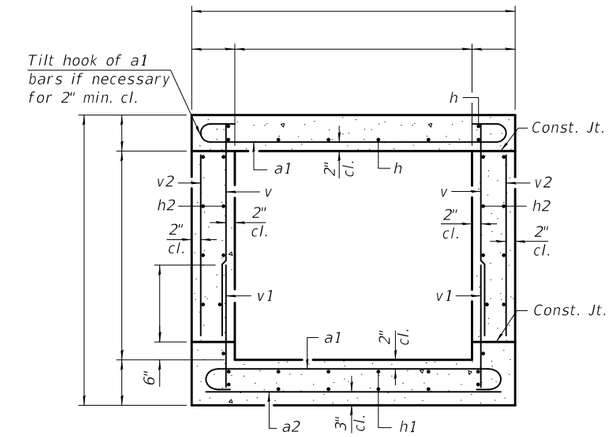


SECTION THRU BARREL

## BILL OF MATERIAL

| Bar | No. | Size | Length | Shape |
|---|---|---|---|---|
| a1 | | # | | |
| a2 | | # | | |
| d | | #4 | 5'-5" | |
| h | | # | | |
| h1 | | # | | |
| h2 | | # | | |
| h3 | | #4 | | |
| h4 | | # | | |
| h6 | | #4 | | |
| n(E) | | # | | |
| s | | # | | |
| s1 | | # | | |
| t | | # | | |
| v | | # | | |
| v1 | | # | | |
| v2 | | # | | |
| v3 | | # | | |
| v4 | | # | | |
| v5 | | # | | |
| w | | #5 | | |
| w1 | | #5 | | |
| Concrete Box Culverts | | | Cu. Yd. | |
| Reinforcement Bars | | | Pound | |
| Reinforcement Bars, Epoxy Coated | | | Pound | |

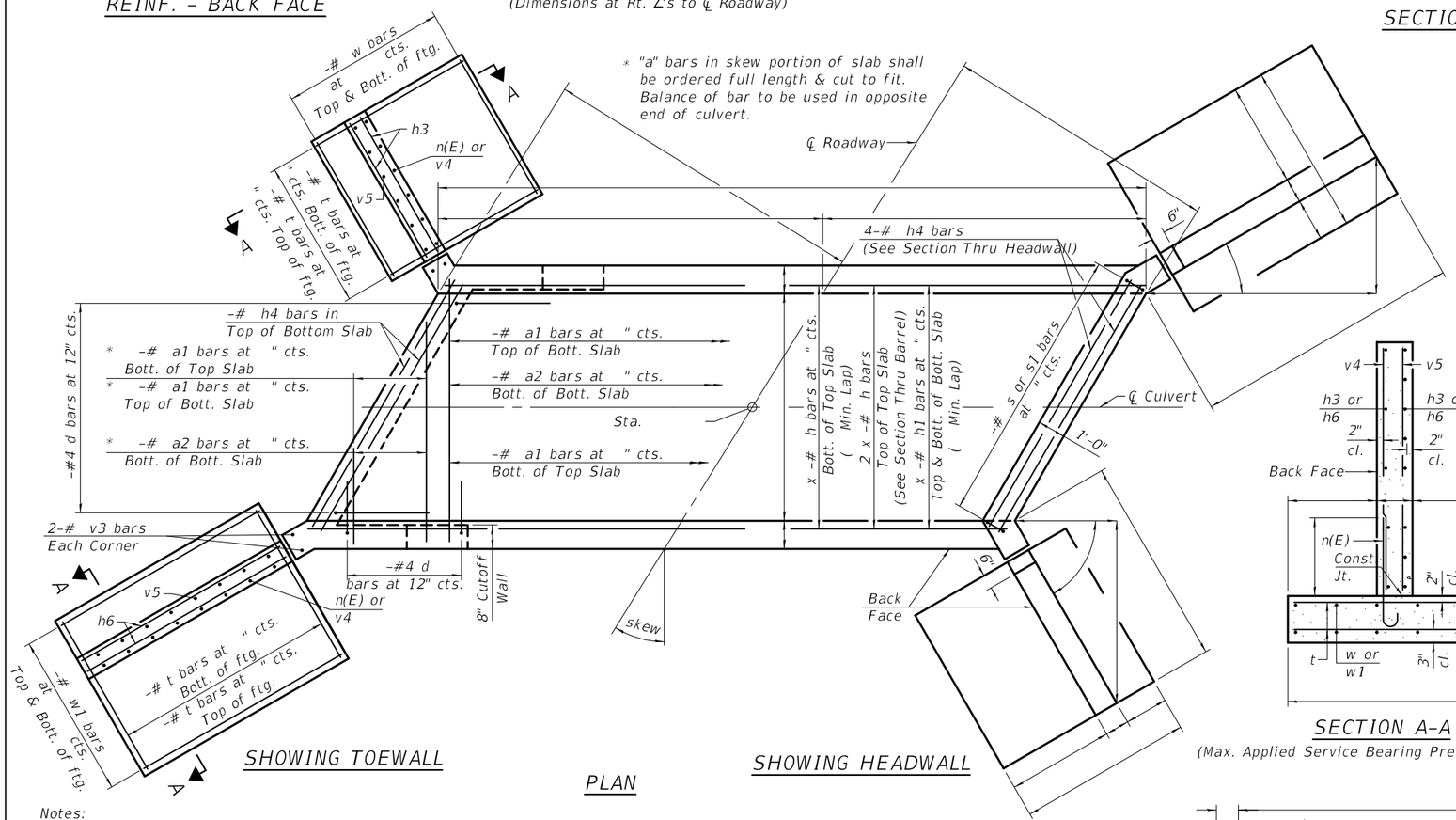


SHOWING TOEWALL

PLAN

SHOWING HEADWALL

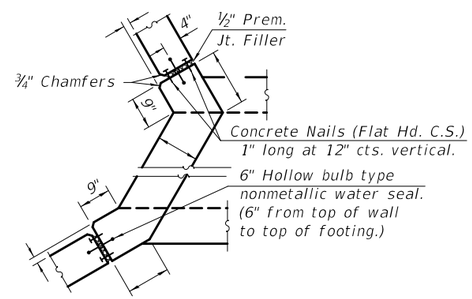


CORNER DETAIL




SECTION A-A

(Max. Applied Service Bearing Pressure = ksf)

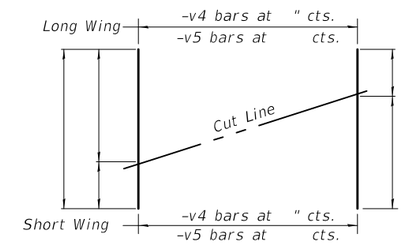


FIELD CUTTING DIAGRAM

Order bars shown full length. Cut as shown and use remainder of bars in opposite wingwall.

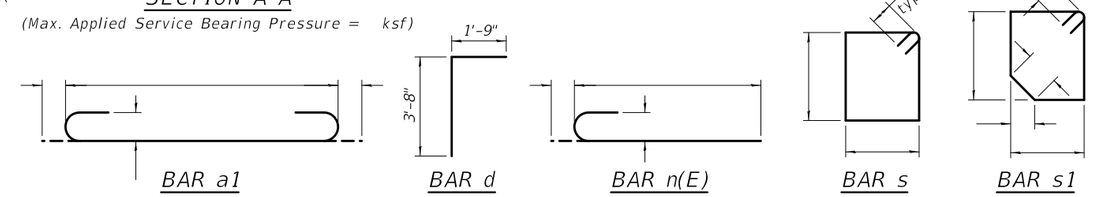


BAR a1 BAR d BAR n(E) BAR s BAR s1

Notes:

Bars indicated thus 12 x 4-#5 etc. indicates 12 lines of bars with 4 lengths per line.

At the Contractor's option, a longer v1 bar may be ordered to replace the v bar. No reduction in quantities shall be made for this substitution.

TSB-SC-TT-RS 2-17-2017

| | | | |
|---|---|---|---|
| FILE NAME = | USER NAME = | DESIGNED - | REVISED - |
| | | CHECKED - | REVISED - |
| | PLOT SCALE = | DRAWN - | REVISED - |
| | PLOT DATE = | CHECKED - | REVISED - |

STATE OF ILLINOIS
DEPARTMENT OF TRANSPORTATION

CULVERT DETAILS
STRUCTURE NO.

| F.A. RTE. | SECTION | COUNTY | TOTAL SHEETS | SHEET NO. |
|---|---|---|---|---|
| | | | | |

CONTRACT NO.

ILLINOIS FED. AID PROJECT

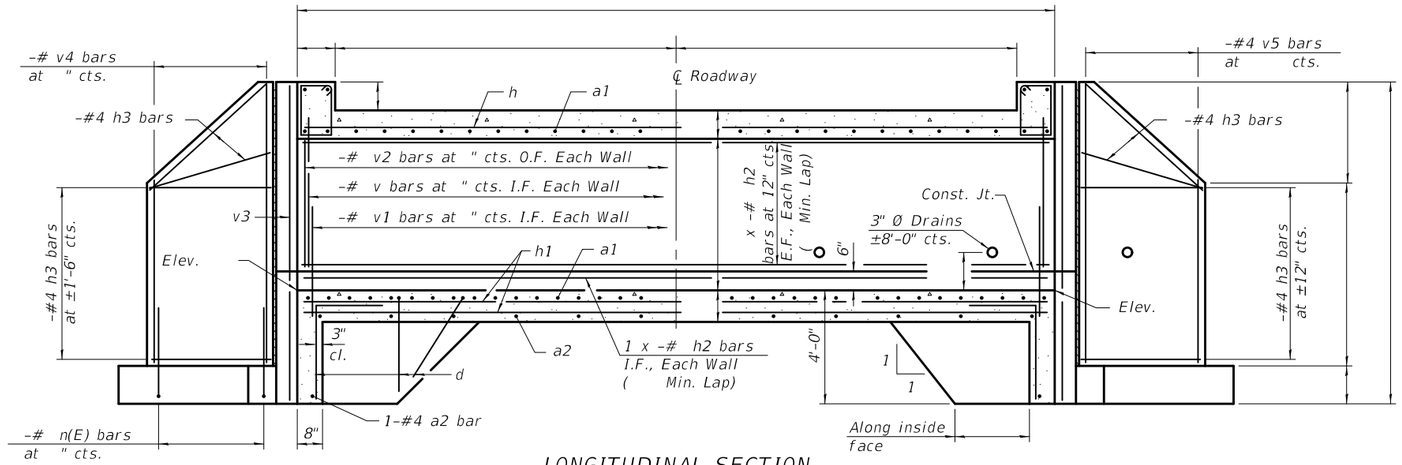


REINF. - BACK FACE

LONGITUDINAL SECTION

REINF. - FRONT FACE

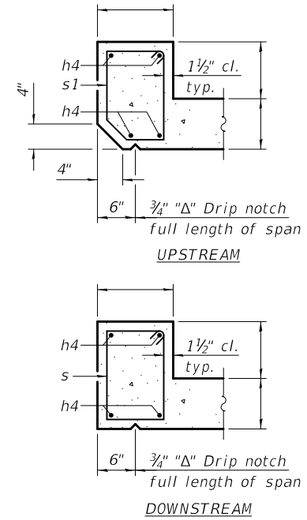


SECTION THRU HEADWALL

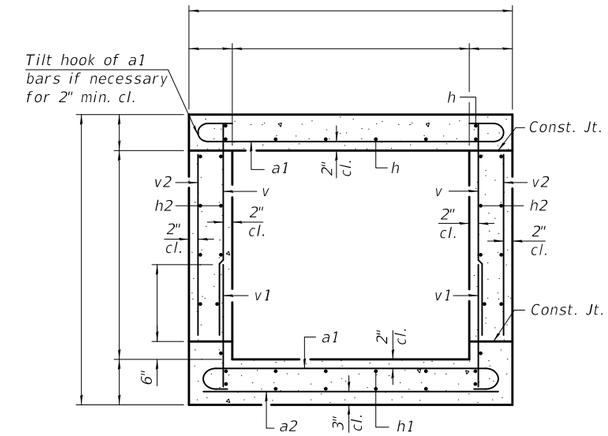


SECTION THRU BARREL

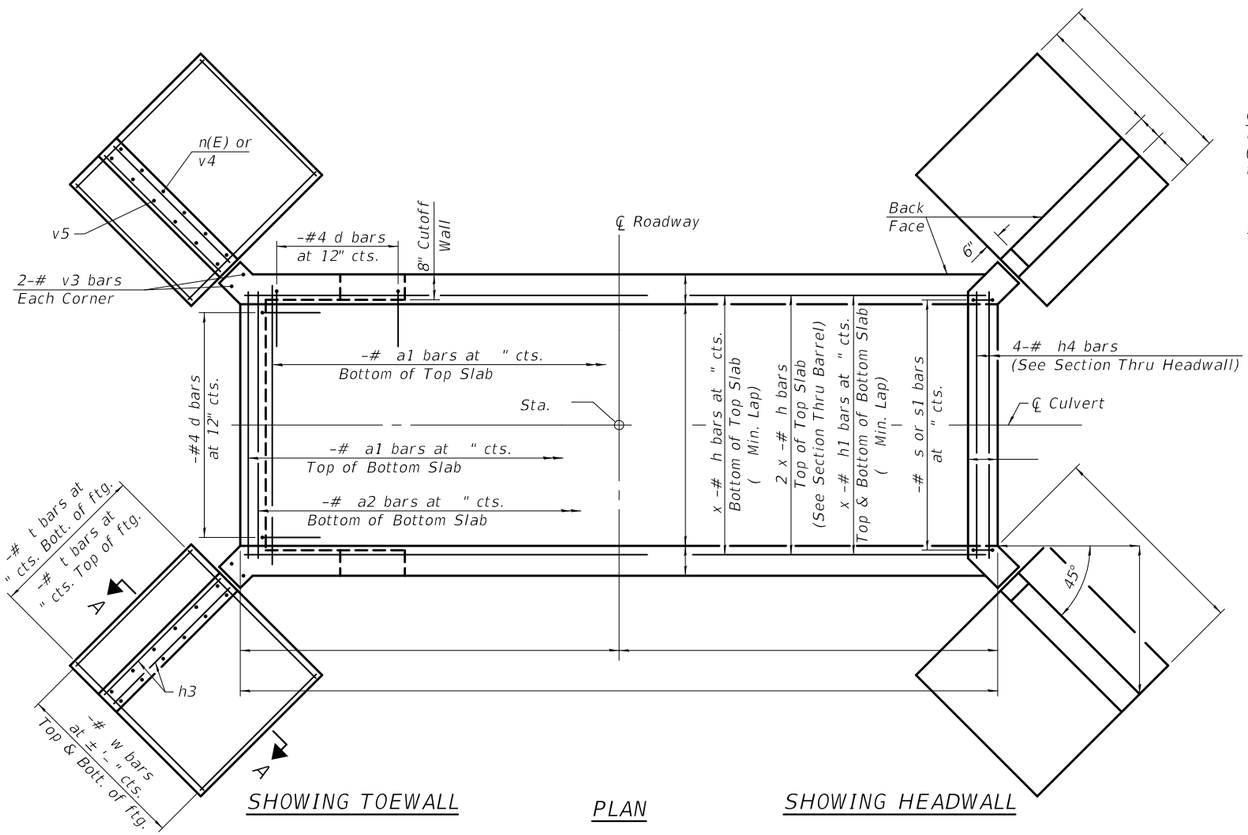


SHOWING TOEWALL

PLAN

SHOWING HEADWALL

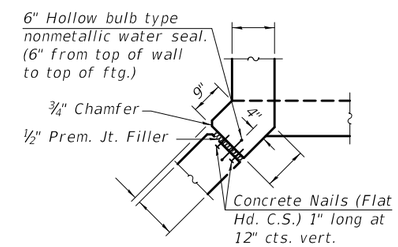


CORNER DETAIL

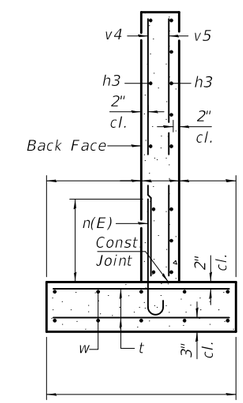


SECTION A-A

(Max. Applied Service Bearing Pressure = ksf)

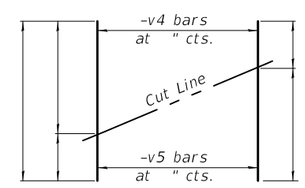


FIELD CUTTING DIAGRAM

Order bars shown full length. Cut as shown
and use remainder of bars in opposite wingwall.

BILL OF MATERIAL

| Bar | No. | Size | Length | Shape |
|---|---|---|---|---|
| | | | | |
| a1 | | # | | |
| a2 | | # | | |
| | | | | |
| d | | #4 | 5'-5" | |
| | | | | |
| h | | # | | |
| h1 | | # | | |
| h2 | | # | | |
| h3 | | #4 | | |
| h4 | | # | | |
| | | | | |
| | | | | |
| n(E) | | # | | |
| | | | | |
| s | | # | | |
| s1 | | # | | |
| | | | | |
| t | | # | | |
| | | | | |
| v | | # | | |
| v1 | | # | | |
| v2 | | # | | |
| v3 | | # | | |
| v4 | | # | | |
| v5 | | # | | |
| | | | | |
| w | | #5 | | |
| | | | | |
| | | | | |
| Concrete Box Culverts | | | Cu. Yd. | |
| Reinforcement Bars | | | Pound | |
| Reinforcement Bars, Epoxy Coated | | | Pound | |

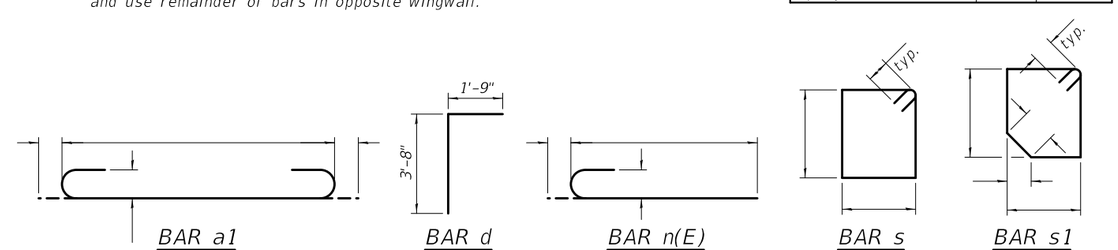


BAR a1 BAR d BAR n(E) BAR s BAR s1

Notes:

Bars indicated thus 12 x 4-#5 etc. indicates 12 lines of bars with 4 lengths per line.

At the Contractor's option, a longer v1 bar may be ordered to replace the v bar. No reduction in quantities shall be made for this substitution.

TSB-SC-TT-ZS 2-17-2017

| FILE NAME = | USER NAME = | DESIGNED - | REVISED - | STATE OF ILLINOIS DEPARTMENT OF TRANSPORTATION | CULVERT DETAILS STRUCTURE NO. | F.A. RTE. | SECTION | COUNTY | TOTAL SHEETS | SHEET NO. |
|---|---|---|---|---|---|---|---|---|---|---|
| | | CHECKED - | REVISED - | | | | | | | |
| | PLOT SCALE = | DRAWN - | REVISED - | | | | | CONTRACT NO. | | |
| | PLOT DATE = | CHECKED - | REVISED - | | | | ILLINOIS | FED. AID PROJECT | | |