Illinois Department of Transportation

DOCUMENTATION
OF
CONTRACT QUANTITIES

SPECIFIC TASK TRAINING PROGRAM

Conducted by the

ILLINOIS CENTER FOR TRANSPORTATION (ICT)
AND
IDOT BUREAU OF CONSTRUCTION

FY 2014

INSTRUCTOR/S_____

DATE _____

LINKS

Illinois Center for Transportation (ICT) Doc Class Training Information.....http://ict.illinois.edu/home/documentation_certification.html

Illinois Department of Transportation.....http://www.dot.il.gov

Construction Manual on the WEB .....http://www.dot.il.gov/constructionmanual/preface.html

Construction Inspector's Checklists..... http://www.dot.il.gov/const/curcnstinspect.html

IDOT Manual Sales.....http://www.dot.il.gov/desenv/orderform.html

INSTRUCTORS

Mary Fries..... IL. Center for Transportation 217/552-2432

Monroetta Gutterridge ……IDOT District Five …….....

Mary Lohrbach.....IDOT District One.....……

Brett Schwalb.....IDOT District Eight.....

IDOT DOCUMENTATION ENGINEER

Mark Neale .....IDOT Central Bureau of Construction.....217/785-4610

You may contact Mary J. Fries with questions/comments or you can email her at mjfries@illinois.edu

Section A

GENERAL REQUIREMENTS

Index of Section A

Use of the ICORS for Documentation.....A-1

Project Diary.....A-3

The Quantity Book.....A-5

Field Inspection Reports/Source Documentation.....A-7

Field Books.....A-7

Initials and Dates.....A-8

Plan Quantity Acceptance.....A-8

Progress Documentation.....A-10

Items That Must be Final Measured.....A-12

Use of Computers for Final Documentation.....A-12

Extra Work (Article 109.04).....A-14

Material Allowance.....A-14

Maximum Payment.....A-15

Yield Checks.....A-15

Thickness Determination Schedule.....A-16

Documentation Procedures for Construction Engineering Performed by Consultants.....A-20

Documentation of Pay Quantities Based on Weight Tickets.....A-20

Final Documentation.....A-27

The policies contained in this section represent the minimum documentation required statewide. Each District may require additional documentation due to conditions specific to the District.

USE OF THE ICORS FOR DOCUMENTATION

Project records are now maintained on a computer-based system known as the Illinois Construction Records System (ICORS). ICORS gives the Resident a computerized Diary and Quantity Book, as well as allowing the generation of a number of documents and reports that replace manually generated reports.

The Documentation procedures for ICORS are the same as for non-ICORS projects, i.e., field books, IDR's, etc. as indicated on under Final Documentation.

ICORS Project Diary (Example page F-3)

Documentation policy requires the resident's name and signature, and the names and initials of personnel assigned to the project, to be written on the first page of the project diary. In ICORS, this can be accomplished by printing the ICORS diary cover page, and writing the information by hand on that cover sheet. This page is then to be kept in the project files.

If anyone other than the resident makes entries in the diary, they must type in their full name at the end of the day's entry.

The project diary is kept in the ICORS data base, but you must also print the new entries at least weekly. The printed diary pages are to be kept with the signed cover sheet in the project records. An acceptable alternative to this method is to save a snapshot file and store this data on a different CD other than where the contract data is backed up.

Weekly Reports (Example page F-4)

Weekly Reports must be generated every week for Completion Date projects and every week for Working Day contracts not in suspension.

Daily Quantities (Example page F-9)

Quantity documentation is kept on separate source documents (i.e. IDR's, field books, tickets, etc.), and the Daily Quantity (DQ) entry is used only as a means of making entries into the ICORS Quantity Book. The DQ is not a source document. DQ entries must be printed at least weekly and kept in the project records. An acceptable alternative to this method is to save a snapshot file and store this data on a different CD other than where the contract data is backed up.

Quantity Book (Example page F-10)

The Quantity Book is generated only by entries on DQ's. The Quantity Book, the Cover Sheet and the Scale Report must be printed at the end of the project.

Pay Estimates

ICORS Pay Estimates are submitted by e-mail unless the estimate includes a new material allowance. Be sure to check the test estimate prior to submitting the real pay estimate. Do not send the same estimate twice, and do not send consecutive pay estimates within less than five days.

Material Allowances

Material Allowances are generated in ICORS. For new material allowances or additions to existing material allowances, pay estimates must be sent by mail (not email). For these two cases, the hard copy of the estimate, BC-131, BC-49, and invoices must all be submitted together by mail. Subsequent estimates (material allowance decreases or stays the same) should be emailed with the BC-131 file included in the e-mail submittal.

Authorizations

Change authorizations are to be created in ICORS. A complete explanation of the reason for change is necessary for authorization approval. Use a separate attached sheet for this explanation if necessary.

Final Copies

When the project is complete, the following documents should be stored with the job records.

1. A complete hard copy of the Diary. The signed and initialed diary cover sheet must be stored with the complete Diary output.

2. A complete hard copy of the Quantity Book.

3. 2 CD copies of the contract data file.

ICORS Backups

In accordance with Department Order 8-2, 4.C.5, users of agency microcomputer systems (including laptops) are responsible for backing up data files stored on local microcomputer disk drive (e.g. C/ drive). The required frequency for backups to be done is any time data files have been appended, altered, modified or created. For personnel using ICORS, a backup must be made once a day any day data is entered into ICORS and a record of this backup must be kept on or with Form BC 2331, ICORS PC Backup Schedule. Detailed instructions are included with Form BC 2331.

PROJECT DIARY

The Project Diary is one of the most essential records kept on the job. The Resident or a designated representative is required to keep a daily diary on each contract.

The diary must be a bound hardback book, unless using ICORS. There must be a separate diary for each contract. Journal type entries must start at the beginning of the diary book. All entries must be in order by date. (No wrap around entries will be allowed.) Preprinted dates may be modified. All entries throughout the diary must be in ink.

The first entry in the diary must include the year, the name and signature of the Resident (and designated representative, if applicable), the complete official designation of the section, and the name of the Contractor. (Example page F-1) This may seem nonessential, but diaries have been thrown out of court because they were not properly identified.

The District's (or Local Agency's) return address must be noted on the title page so that it may be returned if it is ever lost.

A list of all personnel assigned to the job or who work on the job shall be entered in front of diary (print full name). Each person shall put his/her initials after his/her name.

An entry must be made in the project diary for each day of the project, including weekends and holidays, except when the project is officially suspended. Entries must begin by the official start date or when the Contractor begins work, whichever is first. (Example page F-2)

The diary need not repeat the detailed entries reported on the Inspectors' daily field inspection reports but should contain only general information about these operations. The diary should contain a day to day record of all significant items relating to the project. Since it may become important evidence in future claims or litigation it is essential that the diary be complete.

The diary shall not be used as a Quantity Book or field book; only a reference to the work in progress is sufficient.

A complete legible diary will be accepted in court if the need arises. Diary entries made by the Resident do not need to be signed or initialed. Only entries in a project diary made by someone other than the Resident or designated representative need to be signed by the person making that entry.

Information entered in the diary must never be erased, whited-out, or eradicated in any manner. To correct information already entered, cross out information to be changed. The information changed should be initialed and dated by the person making the change.

A partial list of items to be noted in a project diary is:

1. Weather – project location specific (how the weather affects the controlling item of work).
2. Progress Schedule Controlling Item of Work and actual work done by Contractor's forces during day.
3. Number of persons working. (The entries should contain enough information to supplement your required monitoring of DBE activities as per 49CFR 26.37(b) of the Code of Federal Regulations)
4. Working days charged (working day contracts), workable days charged (completion date contracts) and reason for partial or non-working/workable days.
5. Traffic control inspections and changes.
6. Important orders, discussions, or meetings with Contractor.
7. Official visitors and inspections.
8. Opening or closing detours, lane closures, changes in lane closures.
9. Work or materials rejected and reasons.
10. Time of shutting down or resuming of work and explanations.
11. Account of any time spent by Contractor's workers or equipment on disputable items of work.
12. The presence of railroad flaggers and whether the Contractor is to be reimbursed for their services.
13. Length and cause of any delay.
14. Arrival and departure of major equipment.
15. Record of important faxes and telephone calls.
16. Unusual conditions, if any, such as high water, bridge failures, slides, accidents/injuries, etc.
17. Approval for extra work, unless documented elsewhere, such as a prior approval authorization (BC 2256) or an RE memo attached to the authorization for the extra work pay item.
18. Field review with prime and affected subcontractor personnel to determine the timing and placement of erosion/sediment control measures per Construction Memorandum 60 for projects involving these measures.
19. Discussions regarding any specific safety related instruction given to field staff.

At the completion of the project, the diary shall be filed as a part of the permanent job records.

THE QUANTITY BOOK

Instructions pertaining to contract quantities are found in Article 104.02 and Section 109 in the Standard Specifications and the Method of Measurement and Basis of Payment articles for each construction pay item.

For each contract you will be issued a Quantity Book in which contract items are to be posted. The Quantity Book is to be considered the keystone of the complete record keeping structure you will be building in the field. The daily quantities posted here will be referred to when each pay estimate is prepared.

Title Page (Form BC 623) – Example page F-5. The title page in the Quantity Book shall either be filled in by a rubber stamp, typewriter or neatly printed in ink. For state-run projects, the "Address" at the bottom of the page refers to the District in which the project is located. For Local Agency projects (county, city, etc.) the address should be that of the local agency.

Index of Sheets (Form BC 624) – Example page F-6. The computerized index is prepared in the same item-to-item order as the first pay estimate. If additional line items are later added to the contract, they can be added at the end of the index, under the appropriate fund type.

Quantity Record (Form BC 625) – Example page F-7. The job designation block and the upper left-hand side of Form BC 625 will be filled in by a computer run following project award. A separate filled in sheet will be provided for each pay estimate line item. These extra sheets will require the Resident to fill in by hand the complete job designation and quantity information. The lines provided for authorization additions and deductions are to be filled in as authorizations are submitted and approved. The final total quantity in the authorization box should be identical to the final measured and approved amount completed and accepted.

The column headed "Date" should be the dates the quantity was placed.

The “Station to Station, Location, or Description” shall describe the actual area where this item was placed.

Quantities placed are to be kept daily when this particular pay item is constructed. The column "To Date" shall show the accumulative total of this item as additional days of work are entered. This will facilitate the checking of material inspection reports and plan quantities for additions and deductions so that BC 22's may be kept current.

When the pay item is complete, the quantity shall be marked final after the last entry on the quantity book page.

“Evidence of Material Inspection” - An entry must be made in this column each time an entry is made in the quantity column. Evidence of material inspection, as described in the *Project Procedures Guide*, shall be such items as a State of Illinois stamp number, inspection report, plant report, or other information, written or verbal, to indicate that the material is satisfactory. When the information is verbal, it should be recorded in the Project Diary. The Resident should follow up any verbal approvals with written acceptance verification for his/her project files. The evidence of inspection required in the *Project Procedures Guide* should be strictly adhered to for both Progress and Final Documentation and must lead to a verifiable source of the information required. All delivery tickets shall be retained in the project files.

Also, the District's Certification of Materials, which is prepared when the project is finalized can be expedited if the inspector would list under "Evidence of Material Inspection" such additional information as: the name of the plant, quarry or manufacturer of the material together with any identifying marks, imprints, or tags on the material. In any case, the name of the producer of the material must either be noted in this column, or cross-referenced in the project files. For example, if evidence of material inspection is noted only as “Approved Source & Tickets,” then the producer’s name must be noted on the delivery tickets. If the producer’s name is not noted on the tickets, then it must be noted with the evidence of material inspection in the Quantity Book.

“Source of Progress Documentation” - Except for Lump Sum, Each, and Calendar Month items, each entry in the Quantity Book must be supported by either progress or final documentation. This column is to be used to cross reference to the source document. The Quantity Book is the start of the audit trail for all information required to support all progress and final payments for each item.

“Source of Documentation for Final Quantity” - Except for Each, Lump Sum, and Calendar Month items, this area must sufficiently identify the source documents which support the final quantity for this item. This area shall also be used to cross reference to other supporting documentation such as depth checks.

Inspection Reports (Form BC 625) – Example page F-*8*. On the opposite side of Form BC 625, within the block titled INSPECTION REPORTS, it is acceptable to record a statement such as, "See MISTIC Form MIRC08, file" or directly log the quantity. Periodically, the quantities of materials shown on these MIRC08 printouts should be compared to the quantities actually used. The District Materials section should be contacted if insufficient quantity of inspected material is being assigned to your project.

For items in which a weight scale is used to determine the final quantity, the top of this page will be used to record the information on the scale decal placed by the Department of Agriculture. (See Documentation of Pay Quantities based on Weight Tickets)

FIELD INSPECTION REPORTS/SOURCE DOCUMENTATION

Each inspector is to provide a concise, accurate, daily account of the contractor's work so it may be recorded and furnished to the Resident at the end of each working day. This record is to be completed by the inspector actually doing the inspection for the Resident and filed in project records. This record may be documented using any of the appropriate documents listed under Final Documentation later in this section.

Source documentation is required for all quantities of work for which payment will be made. The source document shall contain all information necessary to identify the contractor or subcontractor performing the work, date work was completed, location of work, quantity of work completed and depth checks (if required). The document can also be used to record material inspection. The source document shall also contain initials and dates for all parties involved in inspecting and measuring the work and calculating and checking the quantity of work completed. This information may be documented using any of the appropriate documents listed under Final Documentation later in this section.

When the BC 628 Inspector's Daily Report/IDR (Example page F-23) is used to document the work, the completed BC 628's shall be kept in chronological order and filed in a binder.

When a field book is used to document a pay item, all quantities for that particular pay item should be kept in consecutive pages in the field book, and the field book index kept up to date.

When a calculation file is used to document a pay item, all quantities for a particular pay item shall be kept in consecutive pages and filed,with pay item number and cross references clearly marked. In addition, if an individual document includes more than one (loose-leaf) page, then each page should indicate that it belongs to the same document. This could be indicated, for example, by noting such information as the date, IDR number or "page __ of __."

When weight tickets are used to document a pay item, all tickets pertaining to that pay item shall be kept separately from other project tickets (i.e. separate envelopes).

FIELD BOOKS

All field books that are to become part of the permanent job records will conform to the following.

1. The field books will be hard cover bound books.

2. The inside cover must show the complete project designation (job stamp) and the return address for the District (or local agency).

3. If more than one field book will be included in the project records, the cover must also show an identification (for example, F.B. #1) for cross-referencing purposes. The outside cover also should show the project designation.

4. An index of pages must be completed for the final records. The index must contain enough detail to show the reviewer the contents and general location of the contents in the field book. (Example page F-11*)*

Use of a field book is required for:

1. Permanent survey records, layout records and cross-sections

2. Concrete Superstructure pour summary *(*Example page F-12*)*

Field book required when not using forms:

3. PC Concrete paving summary *(*Example page F-13*),* or Form BC 2531 (Example page F-15,16)

4. Hot-Mix Asphalt (HMA) paving summary (Example page F-14*),* or Form BC 2529 (Example page, F-17,18)

QC/QA projects do not eliminate the documentation requirements above for PCC and HMA Paving. The use of field books for other types of records is optional.

INITIALS AND DATES

All documents will include the initials of the person (or persons) who performed each of the tasks involved in inspecting and documenting the work, as well as the date (or dates) each task was performed. "Inspected by" initials and dates are optional. "Measured by", "Calc'd by" and "Checked by" are required. Initials and dates must be hand-written on all source documentation. Each person will initial his/her own work, except that when more than one person performs the same task, one of those persons may also record the initials of each of the other persons involved in that task.

When a document refers to another document, the referencing document does not need to repeat the initials and dates shown on the referenced document.

PLAN QUANTITY ACCEPTANCE*,* Example pages F-20-22

As stated in Article 109.02, payment to the Contractor will be made only for the actual quantities of work performed and accepted or materials furnished in accordance with the contract. Most final pay quantities will be based directly on measurements and calculations performed by the Resident in the field. However, for a number of pay items, the Method of Measurement specified in the contract documents allows the Department and the Contractor to agree in writing that the plan quantity is accurate and will be used for the final quantity; see Article 202.07(a).

This agreement is based on three points: (1) the plans accurately reflect the existing jobsite conditions, insofar as existing conditions will affect the final quantity of the agreed to items; (2) the plan quantity was accurately calculated; and (3) the work will be built to the lines, grades and dimensions shown on the plans, insofar as they pertain to the pay quantity of the agreed to items.

Form BC 981, Agreement on Accuracy of Plan Quantities is to be used for this agreement. This form lists most of the items in the Standard Specifications for which agreement to contract quantities is permitted. Extra spaces are available on the form for other items allowed by the contract documents. Form BC 981M may be used for metric contracts. In accordance with the Specifications, this agreement must be in writing for any given item before any work is started which would affect the measurements for that item.

The main purpose of the BC 981 is to save the Resident time in documenting the accuracy of the final quantity paid to the contractor. The BC 981 is an acknowledgment that for certain items, at least, it is possible to determine during the design phase accurate final pay quantities. The Regional Engineer's signature on the BC 981 indicates that the Regional Engineer is satisfied that with the quality controls in place in the district the quantities agreed to are accurate.

Even with these controls, however, errors are still possible, and the Specifications make two provisions for this. First, if the plans have been altered or some other development arises which calls into question the applicability of the plan quantity, either party has the right to request in writing and thereby cause the quantities involved to be measured.

Second, if an error has been discovered after the work has started, then that portion of the quantity which is affected by the error will be measured and the final quantity will be adjusted accordingly. In order for this provision to apply, however, the plans must distinguish where the individual quantities apply. This situation could arise, for example, if the plans indicate the quantity of trench backfill required for each run of storm sewer. If the layout for one of the runs is altered then the trench backfill would have to be measured for that run only, and the final quantity for trench backfill would be adjusted by the measured difference for that run.

For items agreed to, the source of documentation for final quantity noted in the Quantity Book will be "BC 981." If errors are found or changes are made to the plan quantity after the work has begun on an agreed item, adjustments to the plan quantity must be documented with appropriate measurements. The final pay quantity will then be the agreed plan quantity plus or minus the documented adjustment to the plan quantity. In this case, the source of documentation for final quantity noted in the Quantity Book is the BC 981, as well as the measurements and calculations used to document the adjustment to plan quantity.

Even though the BC 981 is signed in the office, the Resident is responsible for administering the agreement correctly. When the Resident cites the BC 981 as the source of documentation for the final quantity, the Resident is stating that the three points mentioned above have been satisfied. The BC 981 is merely an alternate means of documenting the accuracy of final pay quantities; it does not mean that the Resident can ignore the actual quantities of work performed.

As the work progresses on the agreed to items, the Resident should be aware of how the estimated progress quantities compare to the plan quantities. If the estimated payments are disproportionate to the Contractor's actual progress on the items, then the Resident should investigate the reason for the discrepancy.

For some of the items for which the Standard Specifications allow agreement to contract quantities, such agreement may not be appropriate in all situations. In general the following restrictions apply:

- Granular backfill, such as PGE, for undercuts must be measured by before and after cross sections. If the plan quantity for excavation includes undercut for PGE, then the excavation quantity may be agreed to only if the plans distinguish the undercut quantity from the rest of the excavation. In this case, the estimated undercut quantity should be noted on the BC 981, and it will be adjusted for the actual measured quantity.

- If the plans contain both earth and rock excavation, and they are contiguous, plan quantities cannot be accepted for the rock excavation unless the unit prices for earth and rock excavation are the same. Otherwise, it will be necessary for the actual quantity of rock excavation to be determined by before and after cross sections. Then, the previously agreed plan quantity of earth excavation will be adjusted by the measured difference in rock excavation. As with the undercut example above, the plan estimate for rock excavation should be noted on the BC 981.

- Plan quantity shall not be agreed to for any item for which the unit of measure is TON (M TON).

PROGRESS DOCUMENTATION

In order to properly document the quantities shown on partial payment estimates, progress entries in the Quantity Book are required. These daily quantities can be based upon either estimates or final measurements. In either case, progress documentation must be kept on file (preferably on the Inspector's Daily Report or in a field book) to indicate how the quantity was established. Make cross-reference notes in the Progress Documentation Source column of the Quantity Book.

The following guidelines can be used in establishing estimated quantities. Quantities that are estimated should be labeled as such. If a method other than one of those shown below is used to estimate a quantity, the method must be documented, clear and reasonable.

Excavation Pay Items – cubic yard (cubic meter)
Example pages D-1, F-23,24

(1) Estimate percentages of plan balance quantities.

(2) Upgrade quantities as balance volumes are completed, or

(3) Use load counts, when available. Use 80% of struck capacity.

(4) Other.

Concrete Items – cubic yard (cubic meter)
Example page F-26.

(1) Extract the daily volumes from your Computation Check file.

or

(2) Use a reasonable percentage (typically 90%) of actual delivered concrete.

(3) Upgrade each completed structural item with the plan Bill-of-Materials quantity.

(4) Other.

Reinforcement Bars – pounds (kilograms)
Example page F-26.

(1) Establish a lbs/yd^3 (kg./m^3) factor from plan quantities; use it as concrete volumes are placed or as the bars are tied in place.

(2) Upgrade each completed structural item with the plan Bill-of-Materials quantity.

(3) Other.

Pipe Pay Items – feet (meter)
Example page F-27.

(1) Count and record pipe sections as installed.

(2) Upgrade completed runs with plan quantities.

Length and Area Pay Items – feet, sq. ft., and sq. yd (meter and sq. meter)

(1) Base computations on paced dimensions.

(2) Station to Station staked dimensions

(3) Plan quantity schedules

Sodding – sq. yd. (sq. meter)

(1) Pay 25% upon placement of sod

(2) Pay 75% upon acceptance of sod

(3) Refer to Article 252.12 and 252.13

Each and Lump Sum Items

If payment is to be made when the item is partially completed, record station or location, date and estimated percentage of completion in the Quantity Book.

For **Traffic Control** items, the following procedure is to be used to estimate progress payments *(*Example page F-28*):*

- Except for temporary bridge or traffic signals, when the traffic control devices required by the standard or special provision are installed, pay 25% of the lump sum (or each) bid price. On subsequent pay estimates, prorate 65% of the price, based on the actual vs. expected time of usage according to the progress schedule. When the devices have been removed the remaining 10% will be paid.

  When it appears, (due to less than anticipated quantities of work performed), a negative adjustment to a traffic control pay item will be required per Article 701.20 (a) of the SSRBC, the Engineer shall make appropriate adjustments to the estimated progress payments noted above, in order to minimize the amount of overpayment to the

contractor, until such time as final payment and required adjustments for the traffic control pay item are determined.

- For temporary traffic signals and temporary bridge signals, pay 60% after the initial installation is complete and the signals are operating. The remaining 40% will be paid after the temporary signal installation has been completely removed.

Blasting Residue Containment Disposal

(Lump Sum) includes numerous contractor submittals, preliminary testing, specialized equipment, regulated disposal and extensive documentation, so the contractor is to be paid in accordance with the following schedule. However, the full amount should not be paid until all of the required disposal documentation has been submitted to the Engineer.

- Pay 30% on the first day of paint removal operations
- Prorate 50% as removal is completed
- Pay final 20% when all disposal documentation has been completed and the final testing is completed.

Topsoil Excavation and Placement (Example page F-29)

Since this pay item pertains to that material obtained from within the limits of the right of way and is measured in cubic yards (cubic meters) in its original position, for progress documentation purposes it may be necessary to pay 50% of the volume computed by method of average end areas in its original position upon completion of the excavation. The remaining 50% of the volume shall be paid after the placing and finishing of the topsoil to the lines, grades, and the minimum thickness shown on the plans.

ITEMS THAT MUST BE FINAL MEASURED

While payments for most items can be estimated under some circumstances (see Construction Memorandum No. 76, Contractor Payments), some types of work require that final measurements be taken each day. Information needed to determine final quantities for such pay items must be obtained at the time the work is done as it will be difficult or impractical to compute quantities with acceptable accuracy at a later date. Examples: removal items, piling, most weight ticket items, trench backfill, and similar items which, when covered, are impossible to measure later.

USE OF COMPUTERS FOR FINAL DOCUMENTATION (Example pages F-30, 31)

The use of computers to determine final quantities is encouraged especially for excavation quantities, reinforcement bars and area items. If computer printouts are used to support pay item quantities paid, the following information is required for proper documentation:

A. Compiled calculation programs verified and approved for use by the District

1 Pay item number and description, with contract number (or job stamp).

2. Printout of the input data, initialed and dated by the person who checked the input;

3. Hard-copy of the results.

B. Electronic spreadsheets

1. Printout of the spreadsheet. The printout must show:

   a Pay item number and description, with contract number (or job stamp).

   b. Input data

   c. Description of how the results are calculated (e.g. sample formulas)

   d. Calculation results, with page subtotals (if applicable)

   e. Cross-references to any other referenced documents

2. The hard-copy of the spreadsheet must be manually initialed and dated by:

   a. The person who prepared the spreadsheet, and

   b. The person who checked the spreadsheet printout, or the person who checked the formulas embedded in the spreadsheet. (i.e. “Prepared By:” and either “Checked By” or “Formulas Checked By” initials and dates.)

   In addition, if field measurements are entered directly in the spreadsheet, the printout must include “Measured By” initials and dates.

C. Other programs, not verified and approved for use by the Department. Because the Department has no way of knowing the accuracy of other programs, the following general rules apply:

1. A record of the original field measurements (if applicable) must be included in the project files,

2. The measurements, or a computer-interpolated version of the measurements, must be in the same format as would normally be required if the measurement had been recorded manually (e.g. station, offset and elevation for cross-section data, or length and width for rectangular field measurements). In other words, the raw data must be in, or be put in, a format that could be understood by the reviewer;

3. The program must be identified, including version numbers;

4. Input data, if entered manually, must be checked;

5. The preparer may be required to demonstrate that the results are correct. This may be accomplished by manually calculating a sample of the results, under the supervision of the Department;

6. All other documentation requirements shall apply.

The documentation for each item shall be kept on file and marked with the item number for easy cross reference.

EXTRA WORK (Article 109.04)

Extra work will be paid for at either the contract price, a lump sum price or agreed unit prices, or on a force account basis. (See Construction Memorandum No. 9, "Force Account Billing Article 109.04" and Construction Memorandum No. 4, "Contract Changes Articles 104.02 and 109.04")

Agreed Unit Price Items:

To establish a new unit price item will require a copy of the correspondence from the Contractor and an answering authorization from the Engineer. A memorandum from the District Estimator agreeing with the Contractor's proposed unit prices is also necessary. In order to expedite the review and processing of an AUP request by the District Estimator, if higher than typical bid prices for a given type of work effort are requested by the contractor, justification for the higher costs (confined work area, lower production rates, small quantities, limited availability of material, etc.) should be clearly documented in the contractor's request.

Force Account:

The Engineer must have copies of:

(a) Proper authorization.

(b) Daily copies of Form BC 635, Extra Work Daily Report, prepared by the Resident or Inspector, jointly signed with the contractor, recording labor, equipment, and material used. In limited cases, more than one days work will be allowed on a BC 635, but only when the workers, equipment and time do not change from day to day.

(c) Contractor's bill. The format should be in accordance with the sample bill shown in Construction Memorandum No. 9, Force Account Billing.

(d) Balancing authorization.

MATERIAL ALLOWANCE

Example page F-32 & F-33. Payment may be made for materials such as structural steel on the basis of a material allowance if the Contractor requests payment for materials in storage. (See Article 109.07 of the Standard Specifications, and Construction Memorandum No. 76, Contractor Payments).

The pay estimate should be accompanied by Form BC 49, Materials Allowance Affidavit; Form BC 131, Statement of Material Allowances; and material supplier invoices and freight bills.

Within 60 days of payment to the Contractor we need copies of proof that the Contractor has paid for the material. Rubber stamp "Paid" will not do. In the event the Contractor does not provide the Resident with proof of payment (copy of canceled check or copy of paid invoice signed and dated) for the material within 60 days of receipt of the payment, the dollar figure entered on the next pay estimate should be reduced by the value of the subject material. As a rule of thumb, the

Resident may use a time limit of 70 days from the date the pay estimate was mailed, to account for processing time and time spent in the mail. See the Forms Section for specific instructions for preparing Forms BC 49 and BC 131.

MAXIMUM PAYMENT

Example page F-34,35. Throughout the Specifications there are numerous references to pay items on which final payment cannot be made for more than ___% of the amount specified by the Engineer. The following is a listing of Pay Items and the applicable percentage that limits maximum payment. (Generally, maximum payment percentages apply only to those Pay Items paid for on the basis of volume or weight.)

Items With "Maximum Pay" Percentages

NITROGEN FERT NUTR	POUND (KILOGRAM)	103%
PHOSPHORUS FERT NUTR	POUND (KILOGRAM)	103%
POTASSIUM FERT NUTR	POUND (KILOGRAM)	103%
AGG SHLDS (A or B)	TON (M TON)	108%
AGG SURF CSE (A or B)	TON (M TON)	108%
AGG BASE CSE (A or B)	TON (M TON)	108%
AGG BASE CSE REPAIR	TON (M TON)	108%
INCIDENTAL HMA SURFACING	TON (M TON)	103%
HMA BIND CSE	TON (M TON)	103%
HMA SURF CSE	TON (M TON)	103%
MIX FOR CR, JTS & FLGWYS	TON (M TON)	103%
LEVEL BIND (MACH & HAND)	TON (M TON)	103%
BIT MATLS PRIME CT	GAL or TON (LITER)	105%
BIT MATL (COVER & SEAL CTS)	GAL or TON (LITER)	105%
COVER COAT AGG	TON (M TON)	110%
SEAL COAT AGG	TON (M TON)	110%
BIT MATLS (ROAD MIX or SEAL CT)	GAL or TON (LITER)	105%
GRANULAR EMBANKMENT SPECIAL	TON (M TON)	108%
POROUS GRANULAR EMBANKMENT	TON (M TON)	108%
AGRICULTURAL GROUND LIMESTONE	TON (M TON)	108%
SUBBASE GRANULAR MATL, TY TY (A, B, or C)	TON (M TON)	108%

Daily yield checks should be run on these items so that the Contractor can be notified when he/she is exceeding the maximum specified amounts of quantity. The limit of the final amount paid shall be plan quantity plus (or minus) theoretical quantities approved by authorization, multiplied by the above percentage.

YIELD CHECKS (Example page, F-14)

A yield check is a calculation to determine if the correct amount of material was used in the work:

$$\text{Yield (\%)} = \frac{\text{Quantity of material delivered}}{\text{Theoretical quantity required}} \text{ x } 100$$

Frequent yield checks are a good engineering practice, and they may help uncover problems in the work early in the project. Yield checks documented by inspectors provide a timely and valuable source of information to the Resident.

While performing yield checks are highly recommended for all materials used in the work, they are required to be documented for the following items:

Item	Frequency
HMA Paving	Frequently, each day of paving
PC Concrete Paving	At end of each day of paving

Also, many items include materials for which the contract specifies the application rate of the material. Ensuring the correct application of such a material is an important part of inspecting and approving the pay item work. The Resident's signature on the pay estimate assures the Department that the materials and procedures used were in accordance with the specifications for each pay item paid for on that estimate. Application rates are recommended, but not required, to be documented explicitly. However, there must be enough information in the project records that the application rate can be verified if the need arises.

THICKNESS DETERMINATION SCHEDULE (Example page, F-36)

In order to clarify the requirements for thickness determinations, we have compiled data from the *Project Procedures Guide*, the Standard Specifications and the Supplemental Specifications into an attached Thickness Determination Schedule. The Schedule refers to the specification article, the minimum frequency for making checks, the source documents for recording the thickness and the method of measurement. It should be pointed out that minimum checking may not be sufficient to verify plan thickness and should be increased as conditions dictate. There are many time-honored engineering methods for determining thickness; i.e., before and after rod and level shots, before and after stringline measurements, direct probe, and measurements of density holes. All are acceptable. **Blanket statements such as "all sidewalk was 4 inches (100mm) or deeper" and "all patches were 9 inches (225 mm)" are NOT acceptable. Actual measurements must be recorded**. In addition, some items such as full-depth HMA and PCC pavement require that cores will be taken and measured by other than project personnel. This coring will be the responsibility of the Contractor, at locations determined by the Resident. (see Construction Memorandum No. 43).

Thickness deficiencies identified by the Resident during construction should immediately be brought to the attention of the Contractor and corrective actions taken. Thickness deficiencies identified during coring will require adjusted prices or removal and replacement per the Standard Specifications. Large contract deductions or removals are the Department's last resort and are a source of embarrassment to both the Contractor and the Department. Special care must be exercised in urban, curbed areas where corrective actions are limited.

The schedule also includes miscellaneous items marked "All Others." This category covers many square foot and square yard (square meter) and foot (meter) items. Control and

documentation of the depth of these items are also very important and should be handled in the same manner as all other items listed.

The location of where the thickness determinations were taken, along with the results, should be clearly noted on the source document. The location of the source document, whether it be field books or IDRs, must be clearly indexed and referenced through the Quantity Book. Many of the problems encountered in verifying thickness checks are in locating and identifying them in the project records. Please have the source document properly cross-referenced.

Thickness determinations are a department policy requirement. The use of proper procedures for thickness determinations will significantly reduce the chances for unacceptable work.

TYPE OF CONSTRUCTION	SPEC. REFERENCE	MINIMUM FREQUENCY	DOCUMENT RECORD	METHOD OF MEAS.
BASE COURSES				
Agg Base Course	351.06	1000 lf (1 per 300 m)	F.B., IDR	1/
PCC Base Course	420.15 & C.M. 43	250 lf (1 per 75 m)	F.B., IDR *	1/, 2/
PCC Base Course Widening (under 6')	354.09	1000 lf (1 per 300 m)	F.B., IDR *	1/, 2/
HMA Base Course	355.09	250 lf (1 per 75 m)	F.B., IDR *	1/, 3/
HMA Bse Cse Wid.	356.07	250 lf (1 per 75 m)	F.B., IDR *	1/ 3/
Soil-Cement	352.17	1000 lf (1 per 300 m)	F.B., IDR	1/
SUBBASES				
Subbase Gran Matl	311.07	1000 lf (1 per 300 m)	F.B., IDR	1/
HMA Agg Mixture	312.31	250 lf (1 per 75 m)	F.B., IDR	1/, 10/
Cement Agg Mixture	312.31	250 lf (1 per 75 m)	F.B., IDR	1/, 9/
Pozzolanic Agg Mixt.	312.31	250 lf (1 per 75 m)	F.B., IDR	1/, 9/
Cement Agg Mixt. II	312.31	250 lf (1 per 75 m)	F.B., IDR	1/, 9/
PAVEMENTS & SURFACE COURSES				
Agg Surface Course	402.06	1000 lf (1 per 300 m)	F.B., IDR	1/
PCC Pavement	420.15 & C.M. 43	250 lf (1 per 75 m)	F.B., IDR *	1/, 4/
HMA Full Depth	407.10	250 lf (1 per 75 m)	F.B., IDR *	1/, 5/
Pavement Removal	440.07 & Suppl. Specs	1 per location or when thickness changes	F.B., IDR *	1/
SHOULDERS				
Agg Shoulders	481.06	1000 lf (1 per 300 m)	F.B., IDR	1/
PCC Shoulders	483.07	250 lf (1 per 75 m)	F.B., IDR *	1/, 7/
HMA Shoulders	482.06	1000 lf (1 per 300 m)	F.B., IDR	1/, 8/
PATCHING				
HMA Patching	442.11	1 per patch	F.B., IDR	6/
PCC Patching	442.11	1 per patch	F.B., IDR	6/

TYPE OF CONSTRUCTION	SPEC. REFERENCE	MINIMUM FREQUENCY	DOCUMENT RECORD	METHOD OF MEAS.
ALL OTHERS				
PCC Sidewalk	424.13	1000 sf (1 per 100 m^2)	F.B., IDR	1/
PCC Slopewall	511.06	1000 sf (1 per 100 m^2)	F.B., IDR	1/
PCC Median	606.15	1000 sf (1 per 100 m^2)	F.B., IDR	1/
PCC Curb, Gutter, Combination Curb & Gutter	606.15	250 lf (1 per 75 m)	F.B., IDR	1/, 11/
PCC Paved Ditch	606.15	250 lf (1 per 75 m)	F.B., IDR	1/
Top Soil	211.08	2500 SY(1 per 2090m^2)	F.B., IDR	12/
Lime Modified Soil	310.15	1500 ft(1 per 450m)	F.B., IDR	12/
Pay Items where a specific thickness is required and the method of measurement is not by volume or weight			F.B., IDR	

Note: Thickness check shall include the entire typical cross section at the locations designated.

* Cores required: In addition to making field thickness measurements, the District may cut cores and make independent measurements. The core results will be the basis for adjustment in unit prices for deficient pavement.

** For items using aggregate of class RR3 or larger, the Resident has the option of documenting either depth checks or yield checks. Documenting depth checks is not required for removal-only items.

1/ Thickness determinations shall be documented by before and after cross sections or before and after measurements from an established reference elevation such as a stringline, form line or edge of pavement.

2/ Thickness determinations will be made during (in the plastic state) and after placement of the material and recorded at the frequency shown in this table. Thin base course, as determined by core measurements, will require an adjustment in the contract unit price as per Art. 420.15.

3/ Thickness determinations will be made during and after placement of the material and recorded at the frequency shown in this table. Thin base course, as determined by core measurements, will require an adjustment in the contract unit price as per Art. 420.15.

4/ Thickness determinations shall be made during (in the plastic state) and after placement of the material and recorded at the frequency shown in this table. Thin pavement, as determined by core measurements, will require an adjustment in the contract unit price as per Art. 420.15.

5/ Subgrade shall be checked after trimming from an established reference elevation such as stringline. All thickness checks shall be recorded at the frequency shown in this table. Thin pavement, as determined by core measurements, will require an adjustment in the contract unit price as per Art. 407.10.

6/ Thickness shall be determined by measurements from the existing edge of pavement or form line.

7/ Thickness determinations shall be made during (in the plastic state) and after placement of the material and recorded at the frequency shown in this table. Shoulder areas less than 90% of the plan nominal thickness shall be removed and replaced in accordance with Art. 483.07.

8/ Thickness determinations shall be made during and after placement of the material and recorded at the frequency shown in this table. Shoulder areas less than 90% of the plan nominal thickness shall be brought to the proper thickness by placing additional shoulder material or by complete removal and replacement of the deficient shoulder area. However, the final shoulder elevation shall not exceed the plan elevation or elevation established by the Engineer by more than $^{1}/_{8}$ in (3 mm).

9/ Thickness determinations shall be made during and after placement of the material and recorded at the frequency shown in this table. Subbase areas less than 90% of the plan nominal thickness shall be brought to the nominal thickness by increasing the thickness of the PCC pavement or by removal and replacement with new mixture. When continuously reinforced concrete pavement is to be constructed, correction shall be removal and replacement only. However, the surface elevation of the completed subbase shall not exceed the surface elevation shown on the plans or established by the Engineer by more than $^{3}/_{16}$ in (5 mm).

10/ Thickness determinations shall be made during and after placement of the material and recorded at the frequency shown in this table. Subbase areas less than 90% of the plan nominal thickness shall be brought to the nominal thickness by increasing the thickness of the PCC pavement, by placing additional bituminous aggregate mixture or by removal and replacement with new mixture. When continuously reinforced concrete pavement is to be constructed, correction shall be removal and replacement only. However, the surface elevation of the completed subbase shall not exceed the surface elevation shown on the plans or established by the Engineer by more than $^{3}/_{16}$ in (5 mm).

11/ Thickness may be determined at the edge of pavement, back of curb, slipform template, or any other location at which the thickness of the item can be verified.

12/ Thickness determinations shall be documented by before and after cross sections or before and after measurements from an established reference elevation such as a stringline, form line or edge of pavement or by measuring the depth in a hole dug in the completed work, or when IBV's are conducted indicating the depth of acceptable subgrade improvement.

DOCUMENTATION PROCEDURES FOR CONSTRUCTION ENGINEERING PERFORMED BY CONSULTANTS

Construction Memorandum No. 61, paragraph 7(c), outlines the documentation requirements for all partial payments made to Consultants for construction engineering services.

The Consultant will periodically submit to the Resident an Invoice, Form BDE 430 or BDE 428, which will tabulate all costs being claimed. All personal services and direct costs being claimed must be documented with time cards, paid receipts and itemized statements.

The following two forms are to be used by the Consultant for documenting some of the applicable construction engineering costs:

Form BC 930	Consultant Engineer's Weekly Personnel and Vehicle Time Distribution Record
Form BC 931	Consultant Engineer's Private Vehicle Weekly Mileage Record

It is the responsibility of a District Representative to review the Invoice for correctness, sign it, and transmit the original and five copies to the Regional Engineer, keeping one copy for the project files.

The State Resident should make random checks from time to time to verify the information recorded by the Consultant on these forms. Random checks of information such as employee names, hours worked, consultant vehicle numbers, and odometer readings on private vehicles should be recorded and filed in the permanent project records.

DOCUMENTATION OF PAY QUANTITIES BASED ON WEIGHT TICKETS

Pay quantities established based on truck weight tickets are not directly measured by Department representatives. For this reason, the following steps are taken to ensure that the quantities shown on the weight ticket are accurate:

1. The total weight of a truck cannot be obtained by adding separate axle weighings (see Obtaining Tare and Gross Weights of Trucks below).
2. The scale must be checked by the Department of Agriculture (DOA). In accordance with the DOA's Bureau of Weights and Measures Inspection Program, permanent scales are to be checked during each period of 12 months, which means that the scale is inspected at some time within each calendar year. Temporary scales are to be checked at each setup. A check by a DOA-approved commercial scale company will be acceptable if the DOA is unable to provide a current inspection. The date on the decal, identification number on the decal and location of the scale shall be recorded in the Quantity Book. **No payment is to be made for items measured on an unapproved scale.**
3. A State representative is to be at the scale to witness the weighings and initial the tickets. This requirement may be waived under certain conditions (see Daily Tare Weights, Automatic Ticket Printers, Weekly Independent Weight Checks, and Small Quantities).

4. Every effort should be made to personally collect and initial all delivery tickets for tonnage pay items, however, the inspector is only to initial those tickets that he/she personally collects. A memorandum should be written to the contract file explaining why the inspector was not present in witnessing the delivery of the material. A daily yield check should be conducted to justify the total amount placed.

For certain materials, a correction factor is to be applied to the pay quantity shown on the tickets (see Aggregate Moisture Correction and Agricultural Ground Limestone Correction).

Obtaining Tare and Gross Weights of Trucks

All materials, which are paid for on the basis of truck weights, shall be weighed in accordance with the following procedure. Reference for this procedure is the Illinois Weights and Measures Act, which refers to the National Bureau of Standards Handbook 44.

"A vehicle or a coupled vehicle combination shall be commercially weighed on a vehicle scale only as a single draft. That is, the total weight of such a vehicle or combination shall not be determined by adding together the results obtained by separately and not simultaneously weighing each end of such vehicle or individual elements of such coupled combination. However:

(a) the weight of a coupled combination may be determined by uncoupling the various elements (tractor, semitrailer, trailer), weighing each unit separately as a single draft, and adding together the results, or

(b) the weight of a vehicle or coupled-vehicle combination may be determined by adding together the weights obtained while all individual elements are resting simultaneously on more than one scale platform."

Daily Tare Weights

Example page F-37 To determine the pay weight of material delivered by truck, both gross and tare weights must be measured. Ordinarily, both measurements are to be witnessed by a representative of the Department. Frequently, however, the contractor's or supplier's loading operations make two separate weighings for each truck burdensome. For this reason, the Department permits the tare weights of each truck to be measured a minimum of once each day, and the measured tare weight of each is then to be used for the remainder of the day.

When daily tare weights are used, the inspector is to witness and record the tare weights for each truck used in that day's supply operation. The inspector's record must identify each truck, the tare weight of the truck, and whether the driver was in the truck during the measurement. Form BC 1465, Report of Truck Tare Weights, is available for this use. (See Small Quantities)

Weight Checks

A weight check is a comparison of the net weight of material shown on the delivery ticket to the net weight measured on another scale. The purpose of a weight check is to give some assurance that the amount of material paid for, as shown on the delivery tickets, is the amount of material delivered to the job site.

For HMA tonnage items, contractors determine the shipping weight either by direct weighing or by using the nominal batch weights. The Standard Specifications require that scales used to measure HMA be equipped with automatic printers (Art. 1102.01(a)(9)). For batch plants the specifications also allow the use of the batch weights, instead of direct scale measurement, when surge or storage bins are not used (Art. 406.13(b)). There are three types of weight checks described in the following sections, one for weekly Independent Weight Checks, and two types (which should be alternated) for ticket weights determined from batch weights. All three types require reweighing the net weight of the material on the selected truck. The difference between them is the source of the weight for comparison with the independent scales.

QC Checks by Contractor

On HMA QC/QA contracts, the contractor is also required to perform scale checks and independent weight checks as part of the QC process. Scale checks performed by the contractor are for the purpose of ensuring the accuracy of the scale equipment. The procedures used by the contractor are the same as used by state representatives for performing the three types of weight checks described in the section above, except the contractor may use the approved platform scales at the plant site or a commercial scale approved by the Engineer. The plant scale must not be the scale used for the original measurement, but may be owned or controlled by the contractor or material supplier. QC checks performed by the contractor do not satisfy the requirement for independent weight checks to be performed by Department personnel.

Automatic Ticket Printers

Article 1102.01 (a)(9) defines an automatic ticket printer as follows:

"The automatic printer shall be an integral part of the scale equipment or the scale and printer shall be directly connected in a manner that will prohibit the manual entry of weights except as provided in a, below.

a. If the platform scale equipment measures gross weight (mass), the printer will record the gross weight (mass) as a minimum. Tare and net weights (masses) shall be shown on weight tickets and may be printed automatically or entered manually.

b. If scale equipment on a platform scale zeros out the truck tare automatically, the printer shall record the net weight (mass) as a minimum.

c. If the scale equipment on a surge bin weigh hopper zeros automatically after discharging each batch, the printer shall record the net weight (mass) as a minimum.

d. If the scale equipment on surge bins automatically shuts down the feed system and weighs the amount in the silo before and after discharge, the printer shall record the net weight (mass) as a minimum."

For any weights recorded by an automatic ticket printer, no inspector will be required to witness the weighing and initial the ticket at the scale location. If tare weights or net weights are not automatically measured, then an inspector must still witness and record the tare weights (see Daily Tare Weights).

Weekly Independent Truck Weight Check/Action Report (Example pages, F-38-40)

A weekly random check must be performed by a State (or Local Agency and QC) representative to verify the actual weight of material delivered. Independent weight checks are to be performed as follows:

1) The check weights will be measured on an independent, approved platform scale other than the scale on which the original measurement is performed and not owned or controlled by the contractor or material supplier. The independent scale must be approved, and the DOA decal information is to be recorded on the OQCR 2367.

2) Trucks are to be selected after leaving the plant, preferably at the paving location. Inspections should be unannounced and randomly scheduled. Under no circumstances should the inspector report to the plant and request a truck be loaded for an independent weight check.

3) Gross and tare weights must be measured and recorded, so that the actual net weight of material can be determined. Ensure the independent scale has been zeroed prior to determining both the gross and tare weights.

4) The independently measured net weight must agree with the weight shown on the tickets within a tolerance of 0.50 percent (HMA) 0.70 percent (aggregate):

   Tolerance (%) = (delivery ticket net wt – weight check net wt) x 100 / (weight check net wt

5) The RE and the contractor shall be provided a copy of the OQCR 2367. The information shall also be reported to the District Office which will in turn inform any other RE being supplied from the same producer. The independent weight check results are to be recorded and placed in the job file available for inspection, with corrective action taken for deviations from tolerance noted.

6) If the independent weight check results are not within tolerance, at the contractor's request, the empty vehicle may be re-weighed on a second independent approved scale. The three empty weights will be analyzed to determine the validity of the independent weight check.

7) Independent weight checks must be performed at least once per week per scale (this includes any scale and batch weights) when any item is placed for which payment is based on weight tickets. If the same scale is used for several contracts during the week, a weight check performed for any one of the contracts will be sufficient for all of the contracts, as long as a copy of the check is included in the records for each of the projects. (See Small Quantities)

8) The contractor must respond to the Engineer, in writing, within 7 calendar days as to the cause and correction of the deficient scale.

   Note:

   a) The DOA performs maintenance checks of scales that have current decals. If the scale is out of tolerance a red tag is used and the scale is not usable. The scale cannot be used during the time it has a red tag.

b) The Office of Quality Compliance and Review (OQCR) is conducting random independent weight checks utilizing statewide independent scales. When an independent weight check is performed by OQCR, the Resident can utilize the weight check to satisfy the weekly independent weight check requirement outlined above.

(See Article 109.01 for additional instructions.)

Documentation for Payment of Hot-Mix Asphalt Based on Batch Weights

The Specifications provide for measurement of the mixtures by either weighing the mixtures on approved platform scales or on the basis of plant batch weights. When measured on the basis of plant batch weights, occasional checks shall be made by weighing full truck loads of the mixture on the approved platform scale at the plant site, or on a commercial scale approved by the Engineer. This check serves two purposes:

(a) To check the accuracy of the scales, either batch, surge bin or the platform scales; or
(b) The accuracy of batching the mixture.

The frequency of check weighing should be a minimum of one per week; however, when the plant is in continuous daily operation, the frequency preferably should be one per day.

The accuracy of the scales should be checked by observing the actual scale weight of the batches produced and comparing the total with the net weight of a truck load from the platform scale. Variation between these weights of more than 0.5 percent would indicate the batch scales or the platform scales should be checked by the Illinois Department of Agriculture.

Scale Accuracy Check (0.5% Tolerance)

1. Tare a truck on an approved platform scale 15000lbs

2. As you observe the scale dial stopping on or near the preset scale face marker, record the actual accumulative aggregate weight. Add in the mineral filler and paving asphalt weights.

	3,979.0
	3,951.0
	4,149.0
	3,960.0
	4,101.0
	4,149.0
	24,289 lbs

3. Gross the truck on the platform scale. 39,401 lbs

$$\text{Tolerance, } 0.5\% = \frac{\text{net wt.(3-1)-summation of weighed batches}}{\text{net wt.(3-1)}} \times 100$$

$$= \frac{24{,}401 - 24{,}289}{24{,}401} \times 100$$

$$= 0.46\% \text{ O.K.}$$

The accuracy of batching the mixture should be randomly checked with the batch weights compared to the platform scales. The results, with an allowance for accuracy in weighing, should be checked within 0.5 percent of the gross load on the platform scale. If batch weights vary more than 0.5 percent, the batch scales should be recalibrated.

Batching Accuracy Check (0.5% Tolerance)

1.	On an approved platform scale weigh a random truck after it has been loaded.	37,840.0 lbs
2.	Empty it on the job.	
3.	Tare the returning truck on the platform scale.	14,191.0 lbs
Actual net weight =		23,649.0 lbs
4.	Record the load ticket	24,000.0 lbs

$$\text{Tolerance, } 0.5\% = \frac{\text{load ticket (4)-actual net weight (1-3)}}{\text{actual net weight}} \text{x}100$$

$$= \frac{24{,}000 - 23{,}649}{23{,}649} \text{x}100 = 1.48\% \text{ Re check and/or recalibrate}$$

The Specifications also require the batch scales to be calibrated at the beginning of each construction season and at other times as deemed necessary by the Engineer. The accuracy certification will be by the Department of Agriculture.

The calibration and check weighing results are to be recorded and placed in the job file available for inspection with corrective action taken for deviations from tolerance noted.

Each of the above checks can be run on alternate occasions. Report these accuracy checks on Form MI 305, Bituminous Daily Plant Output. Independent Weight Check Form OQCR 2367, or other methods using the above format. Results shall be placed in the job file.

Aggregate Moisture Correction (Example page, F-41)

To correct the scale weight of Type A aggregate items, where a moisture deduction is applicable (see Art. 311.08(b)), the following formulas shall be used:

$$\text{(a) actual moisture} = \frac{\text{(wet weight of sample)- (dry weight of sample)}}{\text{(dry weight of sample)}}$$

$$\text{(b) pay weight} = \frac{\text{(scale weight)x(1+allowable moisture)}}{\text{(1+actual moisture)}}$$

Note: Actual moisture content test results shall be rounded to the nearest 0.1% in accordance with the Manual of Test Procedures for Materials.

Agricultural Ground Limestone Correction

(Example page F-42) In accordance with the Article 250.09 , the pay weight for this item is to be adjusted using a source correction factor for the source of the agricultural limestone. This correction factor is stored in the MISTIC system, and is available upon request from the district Materials Engineer.

The adjusted pay weight is to be calculated as follows:

adj. pay weight = (ticket weight) / (4 year source correction factor)

Small Quantities

Witnessing the weighing and initialing of weight tickets at the scale site for materials paid on the basis of weight tickets should have a high priority. However, due to logistics between sources and jobsites, small quantities may be accepted providing the receiving inspector is satisfied that prior to accepting the material the weight appears satisfactory. Under these conditions, the Resident is permitted to waive the following inspection requirements for items whose pay quantity is determined by scale measurements:

1. No inspector will be required to be present at the scale to witness the weighing and initial the tickets.
2. No inspector will be required to witness and record tare weights for that day (if otherwise applicable).
3. No independent weight checks (if otherwise applicable) will be required as a result of that day's delivery of material.
4. No moisture determination will be required (if otherwise applicable) for that day.

Limits on accepting the Contractor's or Supplier's weight tickets in accordance with this section are as follows:

- Aggregates - Not to exceed 500 tons (500 m ton) per day.
- Hot-Mix Asphalt - Mixtures for roadways should not exceed 250 tons (250 m ton) per day.
- Bituminous materials - Not to exceed 4 tons (4 m ton) or 1000 gal (3800 liter) per day
- Other materials consistent with this section.

Unlimited quantities for the following items:

- Fertilizer Nutrients
- Calcium Chloride
- Hydrated lime for lime stabilized soil
- Agricultural ground limestone

Individual Load Ticket Waiver For Recycled Aggregates Paid On Square Yard Or Cubic Yard Basis

When recycled PCC or bituminous concrete is allowed for use in lieu of virgin aggregate for a square yard or cubic yard pay item (i.e. Agg. Subgrade 12) and the material is crushed/milled, graded and properly tested, the requirement for individual load tickets can be waived. Instead, the Contractor can provide a daily tabulation of each truck used to provide this material. This tabulation will contain, at a minimum, the truck number, struck capacity (volume calculation), number of loads delivered for each vehicle and the total calculated volume for the day. Eighty percent of this calculated volume can then be used for yield check determinations.

Progress documentation quantities should also use 80% of the daily volume determined above for estimating cubic yard items. Station to station length times the average width calculations can be used for estimating square yard items. Depth check measurements and documentation are still required. Final documentation of the quantity will consist of field measurements and calculations or Agreement on Accuracy of Plan Quantities using Form BC 981. Verbal approval by the Bureau of Materials, properly documented in the Resident's diary and quantity book, is evidence of material inspection for progress payments. Final Evidence of Material Inspection should be noted in the quantity book as "Material and gradation approved by Bureau of Materials". Copies of the gradation testing data must be in the Resident's final job records.

FINAL DOCUMENTATION

The final quantity for all items appearing in the Quantity Book must be cross-referenced to one of the following which will serve as documentation and which will show measurements and calculations used in determining the final quantity.

Note: Calendar Month, Calendar Day, Each and Lump Sum items entered directly into the Quantity Book will not require a cross reference but these items will require a cross-reference if documented on a source document other than the Quantity Book.

(a) Field measurement books. (hardback only)
(b) Inspector's Daily Report, BC 628, if identified as a "final field measurement."
(c) Cross-section paper for cross sections only.
(d) Weight tickets bound and summarized by means of an adding machine tape. Example page F-41.
(e) Project diary for calendar month or calendar day items.
(f) Calculation file for such items as concrete structures and reinforcement bars.

(g) Agreement on Accuracy of Plan Quantity, BC 981.
(h) Force account file with Extra Work Daily Report, BC 635, and contractor's invoice.
(i) Weekly Trainee Report, SBE 1014, file with signed reports for Trainees.
(j) Built According to Standard #____.
(k) Computer printout/spreadsheet.
(l) Traffic Control Surveillance Report, BC 2240.

The cross-referenced note for final measurements and calculations shall be placed at the bottom of the Quantity Book page, Form BC 625, and should be made only to the document(s) containing the information used in obtaining the final quantity. On items requiring depth checks, the final source of documentation in the quantity book shall include a reference to the depth check documentation location, if that information is located in a different location (Example page, F-7).

All calculations made to determine final pay quantities must be checked by someone other than the preparer. (See Section D for Recommended Checking Procedures)

All documents in the project files must be identified with the project designation (contract number or job stamp), except that documents identified above (Quantity Book, project diary and field books) and any document circulated outside the field office must contain the complete project designation (job stamp).

In addition, if an individual document includes more than one (loose-leaf) page, then each page should indicate that it belongs to the same document. This could be indicated, for example, by noting such information as the date, IDR number or “page __ of __.”

Section B

FINAL DOCUMENTATION
REQUIREMENTS BY PAY UNIT

The following is a general breakdown of most pay units showing the degree of accuracy for measuring each and information required for documenting each. It is acceptable to leave final quantities to the same accuracy as the daily quantities.

PAY UNIT	ACCURACY OF MEASUREMENT	REQUIRED DOCUMENTATION
Acre (Hectare) *Seeding page F-43* *Tree Removal (acres) refer to Art. 201.10(b)(2) F-70*	1. Summation of final quantity to nearest 0.1 acre (0.1 hectare).	1. Field measurements used to calculate the final quantity $\text{Area (acre)} = \frac{\text{L (ft) x W (ft)}}{43{,}560}$ $\text{Area (ha)} = \frac{\text{L (m) x W (m)}}{10{,}000}$, or 2. Form BC 981 (where applicable).
Calendar Day *Traffic Control Surveillance page F-44*	1. Daily or fraction thereof, to the nearest 0.01 CAL DAY.	1. Monthly entries in the Quantity Book cross referenced to daily, summarized BC 2240's, Traffic Control Surveillance Reports, or 2. Other source documents.
Calendar Month *Engr. Field Office page F-2*	1. Monthly or fraction thereof. 2. Summation of final quantity to nearest 0.5 month.	1. Project Diary entry, Quantity Book entry, or other source document on the date the office or lab is ready for use, and the date the Contractor was notified the office or lab would no longer be needed, and 2. Monthly entries in the Quantity Book.
Cubic Yard (Cubic Meter) *Structure Ex. page F-45* *Trench Backfill page F-46* *P.G.E. Note on page F-25* *Conc. Struct. Page F-47,48* *Conc. Hdwl. page F-49*	1. Final quantity of concrete measured to nearest 0.1 cubic yard (0.1 cubic meter)*. 2. All other items measured to the nearest 0.1 cubic yard (0.1 cubic meter) daily and the final quantity summarized to the nearest cubic yard (cubic meter)*. * Note: Individual dimensions shall be measured at least to the nearest 0.1 ft (0.03m)	1. Field measurements used to calculate the final quantity or the statement "built to plan dimensions" when they are used to calculate the final quantity, and 2. Calculations, or 3. "Built according to Standard ___"; "Built according to plan detail sheet__" statements, or 4. Form BC 981 (where applicable) with calculations for daily estimates 5. Depth checks (where applicable).
Each or Lump Sum *Surf. Variations F-50* *Traf Cont Price Adj F-52,53*	1. Each	1. Recorded by Station or location and date in the Quantity Book. 2. Calculations required for any adjustments.

PAY UNIT	ACCURACY OF MEASUREMENT	REQUIRED DOCUMENTATION
Foot (Meter) *Elec. Cables* *page F-54 -55* *Pipe Culvert* *page F-56* *Piling* *page F-57-60*	1. Each run measured to the nearest 0.1 ft. (0.1 m). 2. (English) Summation of final quantity to the nearest foot. (Metric) Leave final quantity to nearest 0.1 meter.	1. Field Measurements. 2. Depth checks (where applicable)
Gallon *Prime Coat page F-61 (on adding machine tape)*	1. Summation of final quantity to nearest gallon (liter).	1. Calculations based upon initialed weight tickets and Specific Gravity per gallon (liter). The Specific Gravity is given on the shipping or storage ticket. $\text{Vol (gallon)} = \frac{\text{net wt. (lbs)}}{8.328 \text{ x Sp. Gr.}}$ $\text{Vol (liter)} = \frac{\text{net wt. (kg)}}{\text{Sp. Gr.}}$ 2. Record of the D.O.A. decal date, I.D. number, and scale location.
Hour *Trainees* *page F-62*	1. Hourly	1. Monthly entries in the Quantity Book cross referenced to summarized, weekly preparedSBE 1014's.
Pound (Kilogram) *Rebar* *page F-31,47* *Str. Steel* *page F-63* *Fertilizer* *page F-64*	1. Summation of final quantity to nearest pound (kilogram).	1. Calculations based on the Bill-of-Materials. Use the weight table shown in Art. 508.07, or 2. "Built according to Standard ____"; ”Built according to plan detail sheet__” statements, or 3. Weight tickets or bag counts, accompanied by conversion calculations (Fertilizer Nutrients), or 4. Form BC 981 (where applicable)

PAY UNIT	ACCURACY OF MEASUREMENT	REQUIRED DOCUMENTATION
Square Foot or Square Yard (Square Meter) *PCC Sidewalk* *page F-36* *Patching* *page F-65* *Base Cse Wid* *page F-66* *Slopewall* *page F-67*	1. Individual areas measured to the nearest 0.1 sq. ft. or 0.1 sq. yd. (0.1 sq. meter) * 2. Summation of final quantity to nearest sq. ft. or sq. yd.(square meter). * Note: Individual dimensions shall be measured at least to the nearest 0.1 ft (0.03m)	1. Field measurements and calculations used to calculate the final quantity or the statement, "built according to plan detail sheet___" or 2. Form BC 981 (where applicable), and 3. Depth checks (where applicable).

Ton (Metric Ton) *Aggr Gr Limestone* *page F-42* *Aggr Base Cse* *page F-41* *HMA SC* *page F-34,17,18*	1. Nearest 0.1 tons daily. 2. Summation of final quantity to nearest ton except for bituminous materials, tack, or prime coat; where the final quantity shall remain to the nearest 0.1 tons.	1. Weight tickets showing the material, date and weight, and 2. Daily adding machine tape showing: job designation, pay item number & description, date, location, net weight & pay weight corrected for moisture and/or 4-year lime conversion factor, if required, with "Calc. By:" and "Checked By:" initials and dates, and 3. Record of the Department of Agriculture decal date and identification number in the Quantity Book or a record of a DOA-approved commercial scale company, and 4. Independent Truck Weight Check (not needed for Small Quantities), and 5. Scale check for HMA batch plants or when automatic printer tickets are used in lieu of scale inspector, and 6. Tickets should have the jobsite inspector's initials on them, and 7. Tickets should have the scale inspector's initials (where applicable), and 8. Daily tare weights on each truck recorded and retained (where applicable)

PAY UNIT	ACCURACY OF MEASUREMENT	REQUIRED DOCUMENTATION
Unit *1000 gal.* *(1000 liters or 5000 liters)* *Suppl. Water* *page F-68*	1. Nearest 0.1 daily. 2. Summation of final quantity to nearest unit.	1. Meter tickets or 2. Weight tickets and calculations $\text{Vol (gallon)} = \frac{\text{net wt. (lbs)}}{8.328 \times \text{Sp. Gr.}}$ $\text{Vol (liter)} = \frac{\text{net wt. (kg)}}{\text{Sp. Gr.}}$ (Sp. Gr. for water = 1.0) or 3. Volume measurements of conveyance and calculations or 4. Record manufacturer rated capacity of truck tank when full loads are used.
Unit *100 ft.(30 m)*	1. Nearest 0.1 daily. 2. Summation of final quantity to nearest unit.	1. Field measurements. Measure each side separately for Excavating and Grading Existing Shoulders. 2. Record by Station (left or right) or location. 3. Calculations.
Unit *100 plants or 100 seedlings* *Seedlings* *page F-69*	1. Perennial plants to the nearest 0.05 daily; Seedlings to the nearest 0.1 daily. 2. Summation of final quantity to nearest unit.	1. Record by Station (left or right) or location. 2. Calculations.
Unit Diameter *Tree Removal* *page F-70*	1. Summation of final quantity to nearest unit diameter.	1. If a tree tape was used, make a note of this with your field measurements. If a tree tape was not used, the actual field measurements must be shown along with calculations for the appropriate Unit Diameter. Unit Dia. = $\frac{\text{circumference (in.)}}{\Pi}$ (English) Unit Dia. = $\frac{\text{circumference (mm)}}{25\,\Pi}$ (metric) (Note: Art. 201.10 defines Π = 3.1416) and 2. Calculations.

Section C

FINAL DOCUMENTATION REQUIREMENTS BY PAY ITEM

SECTION	CODE NO. & ITEM	PAY UNIT	REQUIRED DOCUMENTATION	CONST. MEMO.	EVIDENCE OF MATERIAL INSPECTION
201	Tree Removal Tree Removal Special	Unit	1. Field measurements. 2. Sta. to Sta. groupings listing individual measurements. 3. Tree tape or computations. If a tree tape is used it must be indicated.		None
201	Tree Removal	Acre HA	1. Form BC 981 or 2. Calculations based on the horizontal area within the limits specified on the plans or by the Engineer.		None
201	Temporary Fence	Foot Meter			VIS EXAM
201	Fertilizer Nutrients	LB Kg	See requirements for these items listed under Section 252 and additional information on page C-6 of this section.		CERT (bulk) or MARK (bags)
201	Supplemental Watering	Unit	See requirements for this item listed under Section 252.		Potable source
202	Earth Excavation	CY Cu M	1. Form BC 981 or 2. Before & after cross-sections & calcs.	07 39 60 67	None

SECTION	CODE NO. & ITEM	PAY UNIT	REQUIRED DOCUMENTATION	CONST. MEMO.	EVIDENCE OF MATERIAL INSPECTION
202	Rock Excavation	CY Cu M	1. Before & after cross-sections & calcs or 2. When the unit prices of Rock Excavation & Earth Excavation are identical, authorized approval can be obtained for a Plan Quantity Agreement for both, Form BC 981.	07 39 60 67	None
202	Earth Excavation Widening	CY Cu M	1. Before & after in-place measurements & calcs. Width & depth not to exceed plan dimensions.	07 39 60	None
203	Channel Excavation	CY Cu M	1. Form BC 981 or 2. Before & after cross-sections & calcs.	07 39 60	None
203	Rock Excavation in Channel	CY Cu M	1. Form BC 981 or 2. Before & after cross-sections & calcs.	07 60	None
204	Borrow Excavation	CY Cu M	1. Before & after cross-sections & calcs	07 39 60	Soil from outside ROW: Letter of approval from District Materials Engineer
204	Furnished Excavation	CY Cu M	1. Furn. Exc. = [Emb – Suitable Exc. (1 – SF)], where SF = 0.25 shrinkage factor unless otherwise shown on the plans 2. See Section 200 of Const. Manual.	07 39 60	Soil from outside ROW: Letter of approval from District Materials Engineer

SECTION	CODE NO. & ITEM	PAY UNIT	REQUIRED DOCUMENTATION	CONST. MEMO.	EVIDENCE OF MATERIAL INSPECTION
206	Granular Embankment Special	Ton M Ton	1. Wt. tickets with moisture correction. 2. 108% maximum pay. 3. Department of Agriculture scale decal information.	8	Approved source & Shipment ticket or LIST + TICK
206	Granular Embankment Special	CY Cu M	1. Form BC 981 or 2. Before & after in-place measurements & calcs. Width & depth not to exceed plan dimensions.		Approved source & Shipment ticket or LIST + TICK
207	Porous Granular Embankment	Ton M Ton	1. Wt. tickets with moisture correction. 2. 108% maximum pay. 3. Department of Agriculture scale decal information.	39 8	Approved source & Shipment ticket or LIST + TICK
207	Porous Granular Embankment	CY Cu M	1. Before & after cross-sections & calcs.	07 39 67	Approved source & Shipment ticket or LIST + TICK

SECTION	CODE NO. & ITEM	PAY UNIT	REQUIRED DOCUMENTATION	CONST. MEMO.	EVIDENCE OF MATERIAL INSPECTION
208	Trench Backfill	CY Cu M	1. Form BC 981 or 2. Trench measurements & calcs. Dimensions used in calcs shall not exceed maximum allowable. See Art. 550.04 of the Std. Specs for maximum trench width, or 3. Trench measurements & calcs using the Standard Tables. (for concrete pipe, only)		Approved source & Shipment ticket or LIST + TICK
209	Porous Granular Backfill	CY Cu M	1. Trench measurements & calcs. Dimensions used in calcs shall not exceed maximum allowable. See Art. 550.04 of the Std. Specs for maximum trench width. or 2. Trench measurements & calcs using the Standard Tables. (for concrete pipe, only)		Approved source & Shipment ticket or LIST + TICK
210	Geotechnical Fabric for Ground Stabilization	SY Sq M	1. In-place measurement for calcs. (Do not pay for overlapping fabric)		MARK or CERT or LA I5
211 211	Topsoil Furnish & Place & Compost Furnish and Place	SY Sq M	1. Form BC 981 or 2. Surface measurements of all authorized areas, and calculations. 3. Depth checks.	60	TEST CERT
213	Exploration Trench	Foot Meter	1. In-place measurements of the open trench. 2. Depth checks.		None.

SECTION	CODE NO. & ITEM	PAY UNIT	REQUIRED DOCUMENTATION	CONST. MEMO.	EVIDENCE OF MATERIAL INSPECTION
250	Seeding & Interseeding	Acre HA	1. Form BC 981 or 2. Slope measurements of the surface area seeded and calculations.		CERT or IL OK or LA 15
201 250 252	Nitrogen Fertilizer Nutrient & Phosphorus Fertilizer Nutrient & Potassium Fertilizer Nutrient	LB Kg	1. Wt. tickets or bag counts with computations. LB = Total lbs X % of nutrient The scale & job site inspectors' initials must be on tickets. 2. 103 % maximum pay. 3. DOA scale infor (if weight tickets used)	8	CERT (bulk) or MARK (bags)
250 252	Agricultural Ground Limestone	Ton M Ton	1. Weight tickets 2. Calculations showing that the pay quantity has been corrected using the 4-year source correction factor. 3. 108 % maximum pay. 4. Dept. of Agriculture scale decal information	8	Approved source & Shipment ticket or LIST + TICK
311	Subbase Granular Material	Ton M Ton	1. Wt. tickets with moisture correction, if required. 2. 108% maximum pay. 3. Dept. of Agriculture scale decal information	8	Approved source & Shipment ticket or LIST + TICK

SECTION	CODE NO. & ITEM	PAY UNIT	REQUIRED DOCUMENTATION	CONST. MEMO.	EVIDENCE OF MATERIAL INSPECTION
311	Subbase Granular Material	CY Cu M	1. Form BC 981 or 2. In-place measurements & calcs Width & depth not to exceed plan dimensions.		Approved source & Shipment ticket or LIST + TICK
311	Subbase Granular Material	SY Sq M	1. Form BC 981 or 2. In-place surface measurements and calculations. Width not to exceed plan dimensions. 3. Depth checks.		Approved source & Shipment ticket or LIST + TICK
312	Stabilized Subbase	SY Sq M	1. Form BC 981 or 2. In-place surface measurements and calculations. Width not to exceed plan dimensions. 3. Depth checks.		HMA: Daily Plant Reports + TICK + TEST CAM II: Daily Plant Reports + TICK CAM & PSM: TEST
351	Aggregate Base Course	Ton M Ton	1. Weight tickets with moisture correction, if required. 2. 108% maximum pay. 3. Dept of Agriculture scale decal information.	8	Approved source & Shipment ticket or LIST + TICK
351	Aggregate Base Course	CY Cu M	1. Form BC 981 or 2. In-place measurements & calcs Width & depth not to exceed plan dimensions.		Approved source & Shipment ticket or LIST + TICK

SECTION	CODE NO. & ITEM	PAY UNIT	REQUIRED DOCUMENTATION	CONST. MEMO.	EVIDENCE OF MATERIAL INSPECTION
351	Aggregate Base Course	SY Sq M	1. Form BC 981 or 2. In-place surface measurements and calculations. Width not to exceed plan dimensions. 3. Depth checks.		Approved source & Shipment ticket or LIST + TICK
352	Processing Soil Cement Base Course	SY Sq M	1. Form BC 981 or 2. In-place surface measurements and calculations. Width not to exceed plan dimensions. 3. Depth checks.		TEST
352	Cement	LB Kg	1. Wt. tickets or bag counts & calcs. 2. 105% maximum pay 3. Dept of Agriculture scale decal information. (if wt. ticket used)	8	(LIST or TEST) + Bill of Lading
353 & 354 & 355 & 356	PCC Base Course PCC Base Course Widening HMA Course Widening HMA Base Course Widening	SY Sq M	1. Form BC 981 or 2. In-place surface measurements and calculations. Width not to exceed plan dimensions. 3. Depth checks.		Daily Plant Reports + TICK + TEST
358	Preparation of Base	SY Sq M	1. Form BC 981 or 2. Measurements of affected areas & calcs.		None

SECTION	CODE NO. & ITEM	PAY UNIT	REQUIRED DOCUMENTATION	CONST. MEMO.	EVIDENCE OF MATERIAL INSPECTION
358	Aggregate Base Repair	Ton M Ton	1. Wt. tickets with moisture correction. 2. 108% maximum pay. 3. Dept of Agriculture scale decal information.	8	Approved source & Shipment ticket or LIST + TICK
402	Aggregate Surface Course	Ton M Ton	1. Wt. tickets with moisture correction, if required. May be stockpiled ONLY when used for Temporary Access (Art. 402.10) 2. 108% maximum pay. 3. Dept of Agriculture scale decal information.	8	Approved source & Shipment ticket or LIST + TICK
402	Aggregate Surface Course	CY Cu M	1. Form BC 981 or 2. In-place measurements and calculations. Width and depth not to exceed plan dimensions.		Approved source & Shipment ticket or LIST + TICK
402	Aggregate Surface Course	SY Sq M	1. Form BC 981 or 2. In-place surface measurements and calculations. Width not to exceed plan dimensions. 3. Depth checks.		Approved source & Shipment ticket or LIST + TICK

SECTION	CODE NO. & ITEM	PAY UNIT	REQUIRED DOCUMENTATION	CONST. MEMO.	EVIDENCE OF MATERIAL INSPECTION
403	Bit Materials (Prime Coat) & Bit Materials (Cover & Sea Coatsl) & Polymerized (Cover & Seal Coats)	Gal Liter	1. Weight tickets and calcs or 2. DOA-approved meter tickets corrected for temp. Not truck distributor meter, unless meter has DOA decal. 3. 105% maximum pay. 4. Dept of Agriculture scale decal information.	8	(LIST or TEST) + Bill of Lading
403	Bit Materials (Prime Coat) & Bit Materials (Cover & Seal Coat)	Ton M Ton	1. Weight tickets 2. 105% maximum pay. 3. Dept of Agriculture scale decal information.	8	(LIST or TEST) + Bill of Lading
403	Cover Coat Aggregate & Seal Coat Aggregate	Ton M Ton	1. Wt. tickets with moisture correction. 2. 110% maximum pay. 3. Dept of Agriculture scale decal information.	8	Approved source & Shipment ticket or LIST + TICK
406 408	Bit Materials (Prime Coat) Polymerized (Prime Coat)	Gal Liter	1. Weight tickets and calcs or 2. DOA-approved meter tickets corrected for temp. Not truck distributor meter. 3. 105% maximum pay. 4. Dept of Agriculture scale decal information.	8 55	(LIST + TEST) + Bill of Lading

SECTION	CODE NO. & ITEM	PAY UNIT	REQUIRED DOCUMENTATION	CONST. MEMO.	EVIDENCE OF MATERIAL INSPECTION
406 408	Bit Materials (Prime Coat) Polymerized (Prime Coat)	Ton M Ton	1. Weight tickets 2. 105% maximum pay. 3. Dept of Agriculture scale decal information.	8 55	(LIST or TEST) + Bill of Lading
406 408	Aggregate Prime Coat	Ton M Ton	1. Weight tickets 2. Dept of Agriculture scale decal information.	8	Approved source & Shipment ticket or LIST + TICK
406	Mix for Cracks Joints & Flangeways & Leveling Binder Machine Method & Leveling Binder Hand Method & HMA Binder Course & HMA Surface Course Class I or Superpave	Ton M Ton	1. Weight tickets initialed at jobsite 2. Daily weight totals tabulated on calculator tape 3. Platform scale tickets used in weight checks (when applicable) 4. Dept. of Agriculture decal information. 5. 103% maximum pay. 6. Smoothness test (for HMA surface)	8 10 43 11 53 55 59	Daily Plant Reports + TICK + TEST
407	HMA Pavement (Full Depth)	SY SqM	1. Form BC 981 or 2. In-place surface measurements and calculations width not to exceed plan dimensions. 3. Depth Checks	10 11 43 53 55	Daily Plant Report + TICK + TEST

SECTION	CODE NO. & ITEM	PAY UNIT	REQUIRED DOCUMENTATION	CONST. MEMO.	EVIDENCE OF MATERIAL INSPECTION
408	Incidental HMA Surfacing	Ton M Ton	For all plants: 1. Weight tickets initialed at jobsite 2. Daily weight totals tabulated on calculator tape 3. Platform scale tickets used in weight checks (when applicable) 4. Dept. of Agriculture decal information. 5. 103% maximum pay.	8 10 11 53 55 59	Daily Plant Reports + TICK + TEST
420	PCC Pavement & HE PCC Pavement & PCC Pavement (Jointed)	SY Sq M	1. Form BC 981 or 2. In-place surface measurements and calculations. Width not to exceed plan dimensions. 3. Depth checks. 4. Surface tests (and price adjustment if necessary).	39 43 53	Daily Plant Reports + TICK + TEST
420	Bridge Approach Pavement & PCC Bridge Appoach Shoulder Pavement	SY Sq M	1. Form BC 981 or 2. In-place surface measurements and calculations. Width not to exceed plan dimensions. 3. Depth checks.	39 43	Daily Plant Reports + TICK + TEST

SECTION	CODE NO. & ITEM	PAY UNIT	REQUIRED DOCUMENTATION	CONST. MEMO.	EVIDENCE OF MATERIAL INSPECTION
420	Bridge Approach Pavement Connector	SY Sq M	1. Form BC 981 or 2. In-place surface measurements and calculations. Width not to exceed plan dimensions. 3. Depth checks.	39 43	
420	Pavement Fabric	SY Sq M	1. Same as pavement quantity		LIST + CERT
420	Protective Coat	SY Sq M	1. Form BC 981 or 2. In-place measurements and calculations of the area where Protective Coat is applied.		LA 15 or IL OK or TEST
421	Continuously Reinforced PCC Pavement	SY Sq M	1. Form BC 981 or 2. In-place surface measurements and calculations. Width not to exceed plan dimensions. 3. Depth checks.		Daily Plant Reports + TICK + TEST
421	Pavement Reinforcement	SY Sq M	1. Same as pavement quantity.		LIST + CERT + MARK

SECTION	CODE NO. & ITEM	PAY UNIT	REQUIRED DOCUMENTATION	CONST. MEMO.	EVIDENCE OF MATERIAL INSPECTION
421	Wide Flange Beam Terminal Joint Complete	Each	1. Date and Station in Quantity Book.		Concrete: Daily Plant Reports + TICK + TEST Rebar: LIST + CERT + MARK Epoxy Coated Rebar: LIST + CERT + MARK Steel beam: BBS 59 + CERT
421	Protective Coat	SY Sq M	1. Form BC 981 or 2. Measurements and calculations of the area where Protective Coat is applied.		LA 15 or IL OK or TEST
481	Aggregate Shoulders Ty. A & Aggregate Shoulders Ty. B	Ton M Ton	1. Wt. tickets with moisture correction, if required. 2. 108% maximum pay.		Approved source & Shipment ticket or LIST + TICK
481	Aggregate Shoulders Ty. A & Aggregate Shoulders Ty. B	CY Cu M	1. Form BC 981 or 2. In-place measurements & calcs Width & depth not to exceed plan dimensions.		Approved source & Shipment ticket or LIST + TICK
481	Aggregate Shoulders Ty. A	SY Sq M	1. Form BC 981 or 2. In-place surface measurements and calculations. Width not to exceed plan dimensions. 3. Depth checks.		Approved source & Shipment ticket or LIST + TICK

SECTION	CODE NO. & ITEM	PAY UNIT	REQUIRED DOCUMENTATION	CONST. MEMO.	EVIDENCE OF MATERIAL INSPECTION
482	HMA Shoulders	SY Sq M	1. Form BC 981 or 2. In-place surface measurements and calculations. Width not to exceed plan dimensions. 3. Depth checks.	8 10 11 55	Daily Plant Reports + TICK + TEST
501	Conc. Removal	CY Cu M	1. Field measurements and calculations.	72	None
502	Structure Excavation & Cofferdam Excavation & Rock Excavation for Structure	CY Cu M	1. Measurements of material in original position and calculations. See Spec. for maximum allowable limits of excavation for payment, or 2. Form BC 981, except for Rock Excavation for Structure, which must be measured.	60	None
503	Class MS Concrete & Concrete Handrail & Concrete Encasement	CY Cu M	1. Form BC 981 or 2. Calculations in permanent file verifying plan, or revised, quantity and 3. A statement indicating the structure was built in accordance with plan dimensions or a sketch showing measured dimensions. 4. Price adjustment (per Art 503.22) if required		Daily Plant Reports + TICK + TEST

SECTION	CODE NO. & ITEM	PAY UNIT	REQUIRED DOCUMENTATION	CONST. MEMO.	EVIDENCE OF MATERIAL INSPECTION
503	Conc Struct & Concrete Super Struct	CY Cu M	1. Form BC 981 or 2. Calculations in permanent file verifying plan, or revised, quantity and 3. A statement indicating the structure was built in accordance with plan dimensions or a sketch showing measured dimensions. 4. Deductions for volume of piling, except H pile per Art 503.21 (b). 5. Price adjustment (per Art 503.22) if required.	44 64 73	Daily Plant Reports + TICK + TEST
503	Rubbed Finish Form Liner Textured Surface	SF Sq M	1. Form BC 981 or 2. Measurements and calculations for the areas specified on the plans.		None
504	Precast Concrete Bridge Slab & Precast Prestressed Concrete Deck Beams	SF Sq M	1. Form BC 981 or 2. Measurements and calculations of horizontal surface area.		Precast Bridge Slab: LIST + MARK Precast Bridge Beams: LIST + MARK Prestressed Bridge Beams: IL OK Stamp

SECTION	CODE NO. & ITEM	PAY UNIT	REQUIRED DOCUMENTATION	CONST. MEMO.	EVIDENCE OF MATERIAL INSPECTION
505	Furnish & Erect Structural Steel	LB Kg	1. Approved Shop Drawings 2. Approved shipping weight tag or platform scale ticket or 3. Measurements, and calculations based on standard AISC section weights, deducting for holes, cutouts, etc. 4. If authorized changes are made, the calculations for the changes necessary.		Steel: Fabrication Inspector's Release (BBS 59) + CERT High-strength steel bolts: BMPR approval letter or LA 15 or IL OK
508	Reinforcement Bars	LB Kg	1. Form BC 981 or 2. Calculations in permanent file verifying plan, or revised, quantity. Use the table given in Article 508.07.		Rebar: LIST + CERT + MARK Epoxy Coated Rebar: LIST + CERT + MARK
509	Steel Railing & Aluminum Railing & Pedestrian Railing & Bicycle Railing	Foot Meter	1. Approved Shop Drawings 2. Measurements of overall length of top rail. Measure through all posts and gaps.		Steel Railing: BMPR approval letter or LA 15 or TEST Aluminum Railing: CERT or LA 15 Fasteners: BMPR approval letter or LA 15 or IL OK
511	Slope Wall	SY Sq M	1. Form BC 981 or 2. Measurements of the surface. The construction of anchor and cut-off walls is incidental to this item. 3. Depth checks.		Concrete: Daily Plant Reports + TICK + TEST Mesh: LIST + CERT

SECTION	CODE NO. & ITEM	PAY UNIT	REQUIRED DOCUMENTATION	CONST. MEMO.	EVIDENCE OF MATERIAL INSPECTION
512	Furnishing Piles	Foot Meter	1. Itemized list sent to the Contractor by the Engineer authorizing the length of piling to be ordered. 2. Piling field notes showing field measurements of the piles. 3. Piling Diagram Report BC 2184		Precast Concrete: LIST Prestressed Concrete: IL OK Stamp Steel H or Metal Shell: Cert or LA 15 or IL OK Stamp Timber: CERT or MARK or LA 15
512	Drive Piles	Foot Meter	1. Piling field notes showing field measurements of the piles left in place below the cut-off elevation. 2. Piling Diagram Report BC 2184		None
542	Concrete Collar	CY Cu M	1. Form BC 981 or 2. Statement, "Built according to Standard _____," or 3. If a standard collar is not used, computations verifying the plan quantity are required. Rebar should be paid separately in lbs. (kg). as per Art. 542.11.		Cast in Place: Daily Plant Reports + TICK + TEST Precast: LIST + MARK
550	Storm Sewer	Foot Meter	1. In-place measurements. See Article 550.09 & 602.12 regarding the method of measurement at drainage structures.		Concrete: LIST + MARK Plastic: IL OK Stamp or LA 15 or TEST Clay: IL OK Stamp or LA 15 or TEST

SECTION	CODE NO. & ITEM	PAY UNIT	REQUIRED DOCUMENTATION	CONST. MEMO.	EVIDENCE OF MATERIAL INSPECTION
580	Membrane Waterproofing	SY Sq M	1. Form BC 981 or 2. Measurements and calculations of the surface areas covered.		LA 15 or TEST
606	Concrete Curb	Foot Meter	1. In-place field measurements along the face. See Article 606.14 regarding the method of measurement at drainage structures. 2. Depth checks.		Daily Plant Reports + TICK + TEST
606	Concrete Gutter & Comb. Concrete Curb & Gutter	Foot Meter	1. In-place field measurements in the flow line. See Article 606.14 regarding the method of measuring at drainage structures. 2. Depth checks.		Daily Plant Reports + TICK + TEST
606	Paved Ditch	Foot Meter	1. In-place field measurements in the flow line. The construction of anchor & cut-off walls is incidental to this item. 2. Depth checks.		Daily Plant Reports + TICK + TEST
611	Class SI Concrete Misc.	CY Cu M	1. Form BC 981 or 2. Calculations in permanent file verifying plan, or revised, quantity and 3. A statement indicating the structure was built in accordance with plan dimensions or a sketch showing measured dimensions.		Daily Plant Reports + TICK + TEST

SECTION	CODE NO. & ITEM	PAY UNIT	REQUIRED DOCUMENTATION	CONST. MEMO.	EVIDENCE OF MATERIAL INSPECTION
630	Steel Plate Beam Guard Rail	Foot Meter	1. Measurements of the overall length of the rail element to the limits shown on the plans. End sections are incidental and will NOT be paid for separately.		Steel Plate Rail element: LIST + CERT Steel Post: CERT or LA 15 Barrier end section: NCHRP 350 Pdts. = (LIST + CERT) or LA 15 Non-NCHRP 350 Pdts. – CERT or LA 15 Fasteners: (MARK + CERT) or TEST Wood Post: CERT or MARK or LA 15
663	Calcium Chloride Applied	Ton M Ton	1. Weight tickets		Dust Palliative: TEST Accelerator: CERT
664	Chain Link Fence	Foot Meter	1. In-place measurements along of fence from center to center of end posts, excluding the length occupied by gates.		CERT or LA 15
665	Woven Wire Fence	Foot Meter	1. In-place measurements along of fence from center to center of end posts, excluding the length occupied by gates.		CERT or LA 15
780	Thermoplastic Pavt. Marking Letters & Symbols	SY Sq M	1. Calculations based on the size of letter or symbol specified in the contract. See table in Art. 780.12 for letter or symbol areas. 2. Depth checks.		Thermoplastic Letters: Symbols: CERT or LA 15 Thermoplastic Tape: LA 15 or IL OK Thermoplastic Component Material: LA 15 or IL OK

SECTION	CODE NO. & ITEM	PAY UNIT	REQUIRED DOCUMENTATION	CONST. MEMO.	EVIDENCE OF MATERIAL INSPECTION
780	Thermoplastic Pavt. Marking Line & Paint Pavement Marking Line & Epoxy Pavement Marking & Preformed Plastic Pavement Marking Line	Foot Meter	1. Measurement of each size line applied & accepted. 2. Depth checks (thermoplastic).		Thermoplastic Letters: CERT or LA 15 Thermoplastic Tape: LA 15 or IL OK Thermoplastic Component Material: LA 15 or IL OK

Section D

REFERENCE TABLES

ESTIMATING DAILY EARTH VOLUMES WITH LOAD COUNTS

Page A-10 of this Documentation Guide presents a concept called "Progress Documentation." Simply stated, it is necessary to provide documented entries in the Quantity Book as work progresses, even though final measurements will usually be provided after the pay item is completed. Therefore, with many pay items, the progress documentation may be based upon nothing more than a recorded estimate of work done.

This section deals with a method of estimating Excavation pay items.

Enclosed is a brief excerpt of hauling volumes of some of the scrapers and hauling units being used in the State. If a piece of equipment is being used and the inspector is estimating earth volumes by load count, have the Contractor provide a specification sheet for the piece(s) of equipment in question. The specification sheet will provide struck capacities. Information can also be obtained from the Equipment Watch SpecFinder website, a few examples of which have been included herein. The following example indicates the procedure, which may be used in estimating earth volumes utilizing the struck capacities as shown on available equipment manufacturer's specification sheets, the EquipmentWatch SpecFinder website, or other commercially available data.

1. Obtain the daily load count from the contractor. Spot-check occasionally for accuracy.

2. From the specification sheet for the piece of equipment in question, select the struck capacity for the model being used.

3. Multiply the product of the load count and struck capacity by 80%. (This factor may vary somewhat with various materials and loading procedures, but any factor differing from 80% must be documented as to explain the reasoning.)

   Example: 70 loads hauled by a CAT 621G.

   The days volume = 70 loads x 15.7 cy x 80%= 879 cy
   879 cy x 0.764555 m^3/cy = 672 m^3

4. The above information and calculations shall be recorded on source documentation, such as the Inspector's Daily Report, Form BC 628, (Example, page F-24). When subsequent days of excavation take place with the same hauling units, if these are also estimated quantities, the source documents shall reference the first source document on which the struck capacity is shown.

www.equipmentwatch.com

SpecFinder™

Case 340B
Articulated Rear Dumps

Size Class:
35 MTons & Over
Weight:
63,934 lbs.

Specifications

DUMP BODY	
Body Capacity (Struck - Heaped)	22.2 - 28.8 cy
Dump Angle	68 deg
Dump Cycle (Hoist/Raise)	11 sec
Dump Cycle (Power Down)	13 sec
Body Floor-Plate Thickness	N/A
Body Sidewall Thickness	N/A
Body Front-Plate Thickness	N/A
ENGINE	
Net Horsepower	426
Engine	IV 13
Engine Manufacturer	Case
Displacement (cu. in.)	787
Cylinders	6
Rated RPM	2,000
Engine Torque @ RPM	1,475 @ 1,000
TRANSMISSION	
Transmission Type	Powershift
Transmission Manufacturer	ZF
Number of Speeds	6F/3R
Maximum Speed	29 mph
AXLES & TIRES	
Axle Configuration	6 X 6
Front Tire Size	29.5 R25
Rear Tire Size	29.5 R25
STEERING	
Steering Angle	45 deg
BRAKES	
Service Brakes	Disc
Parking Brake	Disc
WEIGHTS & DIMENSIONS	
Rated Payload	39.672 MT
Overall Machine Height	12'7"
Load Over Height	10'2"
Overall Machine Length	35'4"
Overall Machine Width	10'11"
Width Over Tires (Front)	10'11"
Width Over Tires (Rear)	10'11"
Inside Turning Radius	15'2"
Outside Turning Radius	28'7"
Tread Width (Front)	8'6"
Tread Width (Rear)	8'6"
Wheelbase	20'6"
Ground Clearance	23 in

www.equipmentwatch.com

SpecFinder™

Caterpillar 740
Articulated Rear Dumps

Size Class:
Rated Tonnage Capacity: 35 MTons & Over
Weight:
72,973 lbs.

Specifications

DUMP BODY	
Body Capacity (Struck - Heaped)	24.0 - 31.4 cy
Dump Angle	70 deg
Dump Cycle (Hoist/Raise)	12 sec
Dump Cycle (Power Down)	7 sec
Body Floor-Plate Thickness	.63 in
Body Sidewall Thickness	.47 in
Body Front-Plate Thickness	.31 in
ENGINE	
Net Horsepower	453
Engine	Cat C15 ACERT
Engine Manufacturer	Caterpillar
Displacement (cu. in.)	926
Cylinders	6
Rated RPM	1,800
Engine Torque @ RPM	N/A
TRANSMISSION	
Transmission Type	Autoshift
Transmission Manufacturer	Caterpillar
Number of Speeds	7F/1R
Maximum Speed	34 mph
AXLES & TIRES	
Axle Configuration	6 X 6
Front Tire Size	29.5 R25
Rear Tire Size	29.5 R25
STEERING	
Steering Angle	45 deg
BRAKES	
Service Brakes	Enclosed, Oil cooled
Parking Brake	SAHR
WEIGHTS & DIMENSIONS	
Rated Payload	43.529 MT
Overall Machine Height	12'4"
Load Over Height	10'5"
Overall Machine Length	35'8"
Overall Machine Width	11'3"
Width Over Tires (Front)	11'3"
Width Over Tires (Rear)	11'3"
Inside Turning Radius	13'6"
Outside Turning Radius	26'8"
Tread Width (Front)	8'10"
Tread Width (Rear)	8'10"
Wheelbase	20'4"
Ground Clearance	22.7 in

www.equipmentwatch.com

SpecFinder™

Caterpillar 657G

Dual Engine Conventional Scrapers

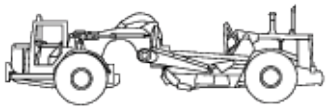

Size Class:
18CY & Over
Weight:
149,417 lbs.

Specifications

SCRAPER BOWL	
Scraper Capacity	32 - 44 cy
Bowl Capacity - Struck	32 cy
Bowl Capacity - Heaped	44 cy
Rated Load	104,058 lbs
Maximum Depth of Cut	16 in
Width of Cut	N/A
Width of Apron Opening	7'8"
Maximum Depth of Spread	26.7 in
ENGINE	
Net Horsepower	564
Engine	C18 ACERT
Engine Manufacturer	Caterpillar
Gross Horsepower	632
Displacement (cu. in.)	1,105
Cylinders	N/A
Rated RPM	1,800
Scraper Engine	C15 ACERT
Scraper Engine Manufacturer	Caterpillar
Scraper Horsepower	410
Scraper Gross Horsepower	478
Scraper Engine Displacement	928
Scraper Engine Cylinders	N/A
Scraper Rated RPM	1,800
TRANSMISSION	
Transmission	Powershift
Number of Speeds	8F/1R
Scraper Transmission	Powershift
Scraper Number of Speeds	8F/1R
Maximum Speed F/R	36 mph
HYDRAULICS	
Hydraulic Pump Type	N/A
Scraper Circuit	153 gpm
Steering Circuit	115 gpm
Cushion Hitch Circuit	15 gpm
Relief Setting - Steering	1,959 psi
Relief Setting - Implement	2,000 psi
AXLES & TIRES	
Tractor Tire Size	40.5/75 R39
Scraper Tire Size	40.5/75 R39
STEERING	
Maximum Steering Angle (R)	90 deg
Maximum Steering Angle (L)	85 deg

www.equipmentwatch.com

SpecFinder™

Terex TS14G

Dual Engine Conventional Scrapers

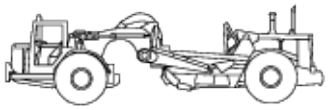

Size Class:
Struck Capacity - Cubic Yds: 18CY & Over
Weight:
62,922 lbs.

Specifications

SCRAPER BOWL	
Scraper Capacity	14.0 - 20.0 cy
Bowl Capacity - Struck	14 cy
Bowl Capacity - Heaped	20 cy
Rated Load	48,000 lbs
Maximum Depth of Cut	12 in
Width of Cut	9'10"
Width of Apron Opening	6'11"
Maximum Depth of Spread	27 in
ENGINE	
Net Horsepower	175
Engine	QSB 5.9
Engine Manufacturer	Cummins
Gross Horsepower	185
Displacement (cu. in.)	360
Cylinders	6
Rated RPM	2,200
Scraper Engine	QSB 5.9
Scraper Engine Manufacturer	Cummins
Scraper Horsepower	158
Scraper Gross Horsepower	167
Scraper Engine Displacement	360
Scraper Engine Cylinders	6
Scraper Rated RPM	2,200
TRANSMISSION	
Transmission	Powershift
Number of Speeds	7F/1R
Scraper Transmission	Powershift
Scraper Number of Speeds	7F/1R
Maximum Speed F/R	28.2 mph
HYDRAULICS	
Hydraulic Pump Type	Gear
Scraper Circuit	71.2 gpm
Steering Circuit	38.7 gpm
Cushion Hitch Circuit	N/A
Relief Setting - Steering	1,950 psi
Relief Setting - Implement	N/A
AXLES & TIRES	
Tractor Tire Size	29.5 R25
Scraper Tire Size	29.5 R25
STEERING	
Maximum Steering Angle (R)	90 deg
Maximum Steering Angle (L)	90 deg

www.equipmentwatch.com

SpecFinder™

Terex TR45

Mechanical Drive Rear Dumps

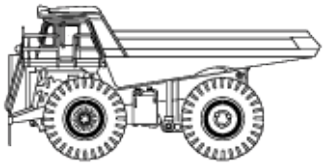

Size Class:
Rated Tonnage Capacity: 40 - 54 MTons
Weight:
81,870 lbs.

Specifications

DUMP BODY	
Body Capacity (Struck - Heaped)	25.6 - 34.0 cy
Dump Angle	58 deg
Dump Cycle (Hoist/Raise)	13 sec
Dump Cycle (Power Down)	9 sec
Body Floor-Plate Thickness	.75 in
Body Sidewall Thickness	.39 in
Body Front-Plate Thickness	.39 in
ENGINE	
Net Horsepower	495
Gross Horsepower	525
Engine	QSK19C
Engine Manufacturer	Cummins
Displacement (cu. in.)	1,150
Cylinders	6
Rated RPM	2,100
Engine Torque @ RPM	1,800 @ 1,400
TRANSMISSION	
Transmission Type	Automatic
Transmission Manufacturer	Allison
Number of Speeds	6F/2R
Maximum Speed	40
AXLES & TIRES	
Front Tire Size	21.00 R35
Rear Tire Size	21.00 R35
BRAKES	
Service Brakes	Disc
Parking Brake	Disc
WEIGHTS & DIMENSIONS	
Rated Payload	41 MT
Overall Machine Height	13'11"
Load Over Height	11'3"
Overall Machine Length	28'7"
Overall Machine Width	15'2"
Width Over Tires (Front)	13'0"
Width Over Tires (Rear)	13'1"
Inside Turning Diameter	N/A
Clearance Circle	N/A
Tread Width (Front)	10'11"
Tread Width (Rear)	8'11"
Wheelbase	12'11"
Ground Clearance	N/A
Gross Weight	171,870

www.equipmentwatch.com

SpecFinder™

Caterpillar TS220
Pull Type Scrapers

Size Class:
18CY & Over
Weight:
28,980 lbs.

Specifications

SCRAPER BOWL	
Scraper Capacity	17.0 - 23.5 cy
Struck Capacity	17 cy
Heaped Capacity	23 cy
Rated Struck Load	56,400 lbs
Depth of Cut	10 in
Width of Cut	11'5"
Depth of Spread	2'5" in
Bucket Length	N/A
Bucket Width	N/A
Bucket Height	N/A
Apron Opening	63 in
Type of Dump	Gravity
TRACTOR MOUNTING	
Tractor Mounting	Hitch
HYDRAULICS	
Required Hydraulic Flow	N/A
Required Hydraulic Pressure	N/A
Hydraulic Circuits Required	2
Hydraulic Cylinders-Bucket	N/A
Hydraulic Cylinders-Gate	4"
Hydraulic Cylinders-Ejector	5"
Hydraulic Cylinders-Frame	5.5"
HORSEPOWER REQUIRED	
Horsepower Required	400
AXLES & TIRES	
Front Tire Size	N/A
Rear Tire Size	29.5 R25
Number of Front Tires	N/A
Number of Rear Tires	2
WEIGHTS & DIMENSIONS	
Operating Weight	28,980 lbs
Overall Length	31'9"
Overall Width	12'1"
Overall Height	8'1"
Ground Clearance	27.5 in

www.equipmentwatch.com

SpecFinder™

Caterpillar 623G

Single Engine Elevating Scrapers

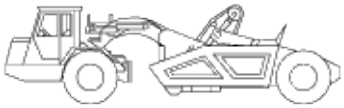

Size Class:
Heaped Capacity - Cubic Yds: 18 & Under 30CY
Weight:
82,530 lbs.

Specifications

SCRAPER BOWL	
Scraper Capacity	18.0 - 23.0 cy
Bowl Capacity - Struck	18 cy
Bowl Capacity - Heaped	23 cy
Rated Load	55,115 lbs
Depth of Cut	13 in
Width of Cut	10'4"
Maximum Depth of Spread	15 in
ELEVATOR	
Number of Elevator Flights	15
Elevator Overall Length	12'3"
Width of Elevator Flights	8.5"
Elevator Flight Spacing	20 in
ENGINE	
Net Horsepower	365
Engine	C15
Engine Manufacturer	Caterpillar
Displacement (cu. in.)	928
Cylinders	6
Gross Horsepower	394
Rated RPM	1,800
TRANSMISSION	
Transmission	Powershift
Number of Speeds	8F/1R
Maximum Speed Fwd/Rev	32 mph
HYDRAULICS	
Hydraulic Pump Type	N/A
Scraper Circuit	63.7
Steering Circuit	55 gpm
Cushion Hitch Circuit	9.8 gpm
AXLES & TIRES	
Tractor Tire Size	33.25 R29
Scraper Tire Size	33.25 R29
STEERING	
Maximum Steering Angle (R)	90
Maximum Steering Angle (L)	85
WEIGHTS & DIMENSIONS	
Turning Width	35'11"
Overall Shipping Height	12'2"
Height with ROPS/EROPS	11'3"
Overall Length	43'5"
Length to Front from F. Axle	10'1"
Length to Rear from Rear Axle	7'2"
Overall Width	11'8"

www.equipmentwatch.com

SpecFinder™

Caterpillar 621G

Single Engine Conventional Scrapers

Size Class:
Struck Capacity - Cubic Yds: Under 18CY
Weight:
73,789 lbs.

Specifications

SCRAPER BOWL	
Scraper Capacity	15.7 - 22.0 cy
Bowl Capacity - Struck	15.7 cy
Bowl Capacity - Heaped	22 cy
Rated Load	52,800 lbs
Depth of Cut	N/A
Width of Cut	9'11"
Width of Apron Opening	5'10"
Maximum Depth of Spread	20.6 in
ENGINE	
Net Horsepower	365
Engine	C15
Engine Manufacturer	Caterpillar
Power Mode	Diesel
Displacement (cu. in.)	928
Cylinders	6
Gross Horsepower	394
Rated RPM	1,800
TRANSMISSION	
Transmission	Powershift
Number of Speeds	8F/1R
Maximum Speed F/R	32/5.4 mph
HYDRAULICS	
Hydraulic Pump Type	N/A
Scraper Circuit	65.5 gpm
Steering Circuit	55 gpm
Cushion Hitch Circuit	9.8 gpm
Relief Setting - Steering	2,250 psi
Relief Setting - Implement	2,175 psi
AXLES & TIRES	
Tractor Tire Size	33.25 R29
Scraper Tire Size	33.25 R29
STEERING	
Maximum Steering Angle (R)	90 deg
Maximum Steering Angle (L)	85 deg
WEIGHTS & DIMENSIONS	
Turning Width	35'11"
Overall Shipping Height	12'2"
Height with ROPS/EROPS	11'3"
Overall Length	42'5"
Length to Front from F. Axle	10'1"
Length to Rear from Rear Axle	7'1"
Overall Width	11'5"

When performing a series of arithmetic operations (i.e. addition, subtraction, division, multiplication, exponents), you must perform those operations in a particular order. There is a mnemonic to help you remember the order - PEMDAS:

P Parentheses

E Exponents

M Multiplication

D Division

A Addition

S Subtraction

If you have a series of operations, do what's in parentheses first, then apply exponents, then do any multiplication or division, and finally do any adding or subtracting.

Example: $4 + 3\left(2 - \frac{1}{4}\right) - 2^3 = ?$

Do what's in parentheses first (find LCD): $2 - \frac{1}{4} = \frac{8}{4} - \frac{1}{4} = \frac{7}{4}$

So now we have $4 + 3\left(\frac{7}{4}\right) - 2^3 = ?$

Now apply exponents: $2^3 = 8$ s

So now we have $4 + 3\left(\frac{7}{4}\right) - 8 = ?$

Now do multiplication: $3\left(\frac{7}{4}\right) = \frac{21}{4}$

So now we have $4 + \frac{21}{4} - 8$

Now do addition and subtraction (find LCD): $4 + \frac{21}{4} - 8$

is the same as $\frac{16}{4} + \frac{21}{4} - \frac{32}{4} = \frac{5}{4}$

So our answer is $\frac{5}{4}$.

This section presents mathematical formulas used by IDOT for various quantity determinations.

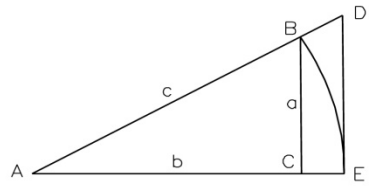

Right Triangle

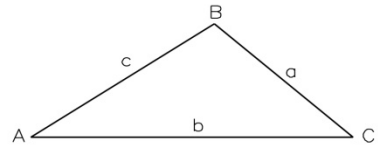

Oblique Triangle

Right Triangles

$\sin A = \frac{a}{c} = \cos B$

$\cos A = \frac{b}{c} = \sin B$

$\tan A = \frac{a}{b} = \cot B$

$\sec A = \frac{c}{b} = \operatorname{cosec} B$

$\operatorname{cosec} A = \frac{c}{a} = \sec B$

$\cot A = \frac{b}{a} = \tan B$

$a = c \sin A = c \cos B = b \tan A = b \cot B = \sqrt{c^2 - b^2}$

$b = c \cos A = c \sin B = a \cot A = a \tan B = \sqrt{c^2 - a^2}$

$c = \frac{a}{\sin A} = \frac{a}{\cos B} = \frac{b}{\sin B} = \frac{b}{\cos A}$

Oblique Triangles

Given	Sought	Formula
A, B, a	b, c	$b = \frac{a}{\sin A} \cdot \sin B$ $\quad c = \frac{a}{\sin A} \bullet \sin (A+B)$
A, a, b	B, c	$\sin B = \frac{\sin A}{a} \cdot b$ $\quad c = \frac{a \sin (A + \arcsin (b \sin A / a))}{\sin A}$
C, a, b	$\frac{1}{2}(A + B)$ $\frac{1}{2}(A - B)$	$\frac{1}{2}(A+B) = 90° - \frac{1}{2}C$ $\operatorname{Tan} \frac{1}{2}(A - B) = \frac{a - b}{a + b} \cdot \tan \frac{1}{2}(A+B)$
a, b, c	A Area	Given $s = \frac{1}{2}(a+b+c)$, then: $\sin \frac{1}{2} A = \sqrt{\frac{(s - b)(s - c)}{bc}}$ $\cos \frac{1}{2} A = \sqrt{\frac{s(s - a)}{bc}}$ $\tan \frac{1}{2} A = \sqrt{\frac{(s - b)(s - c)}{s(s - a)}}$ $\sin A = 2\frac{\sqrt{s(s - a)(s - b)(s - c)}}{bc}$ $\text{Area} = \sqrt{s(s - a)(s - b)(s - c)}$
c, a, b	Area	$\text{Area} = \frac{1}{2} ab \sin C$

Nomenclature

A	=	total surface area
d	=	distance
h	=	height
p	=	perimeter
r	=	radius
s	=	side (edge) length, arc length
V	=	volume
θ	=	vertex angle, in radians
ϕ	=	central angle, in radians

Circle

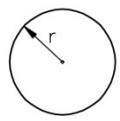

$$p = 2\pi r$$

$$A = \pi r^2 = \frac{p^2}{4\pi}$$

Parabola

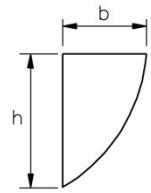

$$A = \frac{2bh}{3}$$

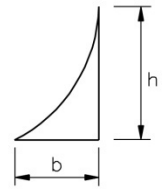

$$A = \frac{1}{3}\,bh$$

Circular Segment (1)

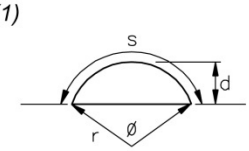

$$A = \frac{1}{2} r^2(\phi - \sin\text{-}\phi)$$

$$\phi = \frac{s}{r} = 2\left(\arccos\frac{r-d}{r}\right)$$

Circular Sector

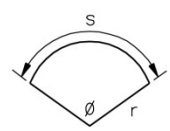

$$A = \frac{1}{2}\,\phi\, r^2 = \frac{1}{2}\,sr$$

$$\phi = \frac{s}{r}$$

Circular Segment (2)

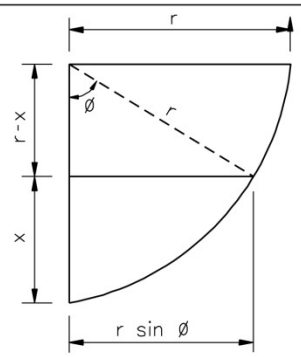

$$\cos\phi = \frac{r - x}{r}$$

<u>Area of Circle Segment</u>

$$\frac{\phi}{360°}\pi r^2$$

<u>Area of Triangle</u>

$$\frac{1}{2}(r - x)(r \sin\phi)$$

External Area

Total Area - Area of Circle Segment = External Area

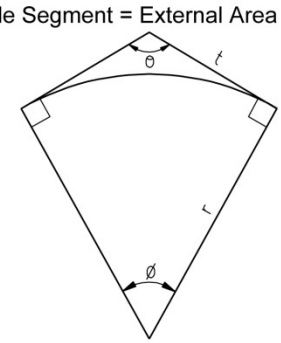

$$t = \frac{r}{\tan\frac{\theta}{2}}$$

$$\phi = 180° - \theta$$

$$\text{Total Area} = rt = \frac{r^2}{\tan\frac{\theta}{2}}$$

$$\text{Area of Circle Seg.} = \pi r^2 \frac{\phi}{360}$$

$$\text{Ext. Area} = r^2\left[\frac{1}{\tan\frac{\theta}{2}} - \pi\frac{\phi}{360}\right]$$

Number of Sides	Name of Polygon
3	triangle
4	rectangle
5	pentagon
6	hexagon
7	heptagon
8	octagon
9	nonagon
10	decagon

Triangle

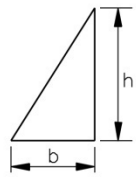

$$A = \frac{1}{2}\,bh$$

Trapezoid

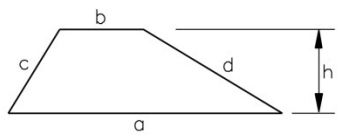

$$p = a + b + c + d$$

$$A = \frac{1}{2}\,h\,(a + b)$$

The trapezoid is isosceles if c = d.

Parallelogram

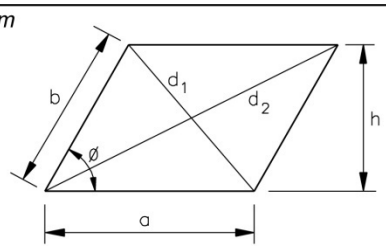

$$p = 2\,(a + b)$$

$$d_1 = \sqrt{a^2 + b^2 - 2ab(\cos\phi)}$$

$$d_2 = \sqrt{a^2 + b^2 + 2ab(\cos\phi)}$$

$$d_1^2 + d_2^2 = 2\,(a^2 + b^2)$$

$$A = ah = ab(\sin\phi)$$

If a = b, the parallelogram is a rhombus.

Regular Polygon

(n equal sides)

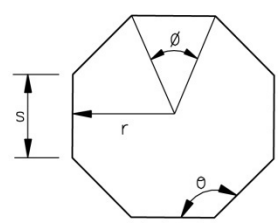

$$\phi = \frac{2\pi}{n}$$

$$\theta = \frac{\pi\,(n - 2)}{n}$$

$$p = ns$$

$$s = 2r\left(\tan\left(\frac{\phi}{2}\right)\right)$$

$$A = \frac{1}{2}\,nsr$$

RECOMMENDED CHECKING PROCEDURES

The Checker assumes responsibility for all errors made by the Preparer that are not caught by the Checker!

- DO NOT ERASE ERRORS! Cross out the original entry with a single line and correct.

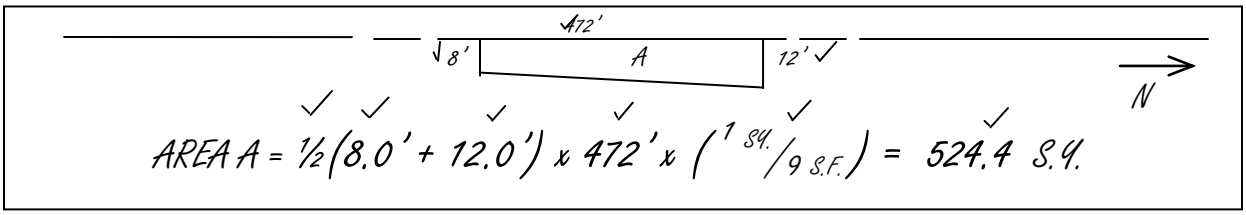

- Show what you have checked by making small check marks.

- Checking involves much more than punching numbers into a calculator. The following is a partial list of things that the checker should be reviewing:

  - All items on any sketches were properly labeled, and the measurements were correctly transferred from the original sketch to the equations.

  - The correct equation was used.

  - The Stationing is correct.

  - The Pay Item, Pay Item Number, and Fund Code are correct.

  - All necessary yield checks have been made. You should also note if the yield is within the spec. *(If it is out of spec, then an explanation of the factors that would account for the deviation or actions that were taken should be noted.)*

  - The "Quantity and Units" column of the IDR matches the calculated value and the pay item requirements.

  - All numbers have been correctly rounded-off, in accordance with Section B of the Documentation Manual.

  - Each pay item is labeled as an "estimate" or a "final measurement." (A final measurement is one that cannot or will not be re-measured.)

  - The date, Contractor/Subcontractor, weather, and job stamp information have been completed on the IDR.

  - "Measured by," "Calculated by" and "Checked by" have been initialed and dated.

  - All tonnage and gallon tickets have been initialed, correctly tallied and bound.

  - The "Evidence of Inspection" has been completed in accordance with the PPG, or Section C of the Documentation Manual.

Remember: "Any place a mistake might be made, sooner or later, it will be made!"

Break areas into geometric shapes that you can calculate & use the correct formulas!

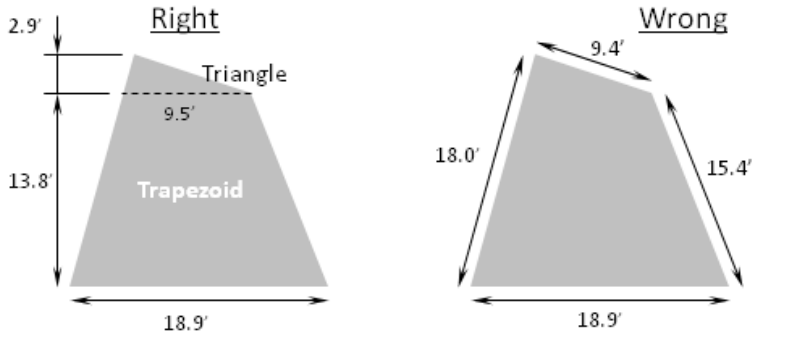

$$\frac{2.9'(9.5')}{2} + 13.8'\frac{(9.5' + 18.9')}{2} = 209.7 \text{ SF} = 23.3 \text{ SY}$$

$$\frac{(18' + 15.4')}{2} \times \frac{(9.4' + 18.9')}{2} = 236.3 \text{ SF} = 26.3 \text{ SY}$$

23.3SY ≠ 26.3 SY

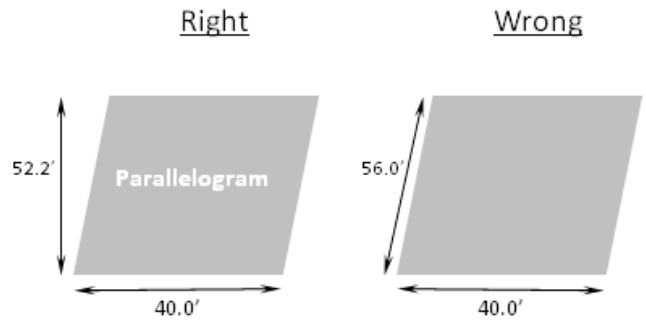

40.0′ x 52.2′ = 2088.0 SF = 232.0 SY

40.0′ x 56.0′ = 2240.0 SF = 248.8 SY

232.0 SY ≠ 248.8 SY

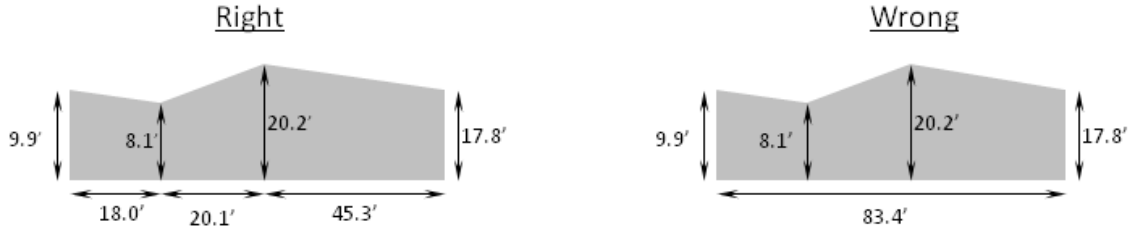

$$\frac{(9.9' + 8.1')}{2}18.0' + \frac{(8.1' + 20.2')}{2}20.1' + \frac{(20.2' + 17.8')}{2}45.3' = 1307.1 \text{ SF} = 145.2 \text{ SY}$$

$$\frac{(9.9' + 8.1' + 20.2' + 17.8')}{4} \times 83.4' = 1167.6 \text{ SF} = 129.7 \text{ SY}$$

145.2 SY ≠ 129.7 SY

Section E

TRENCH BACKFILL TABLES FOR CONCRETE PIPES

These tables can be used by the designer or the engineer to determine the volume of TRENCH BACKFILL that can be paid for when backfilling storm sewer trenches. Maximum trench widths adopted by the January 1, 2012 Standard Specifications are used.

NOTE: If the trench depth is 5ft. (1.5m) and less, with protection, the values included in the tables herein will be of no value. The engineer will have to calculate the actual volume of TRENCH BACKFILL using the formulas included within this section.

The calculated volumes are based on the use of standard **English sized pipes** which meet the tolerances of the Metric pay item.

TRENCH BACKFILL TABLE FOR CIRCULAR CONCRETE PIPE, ENGLISH

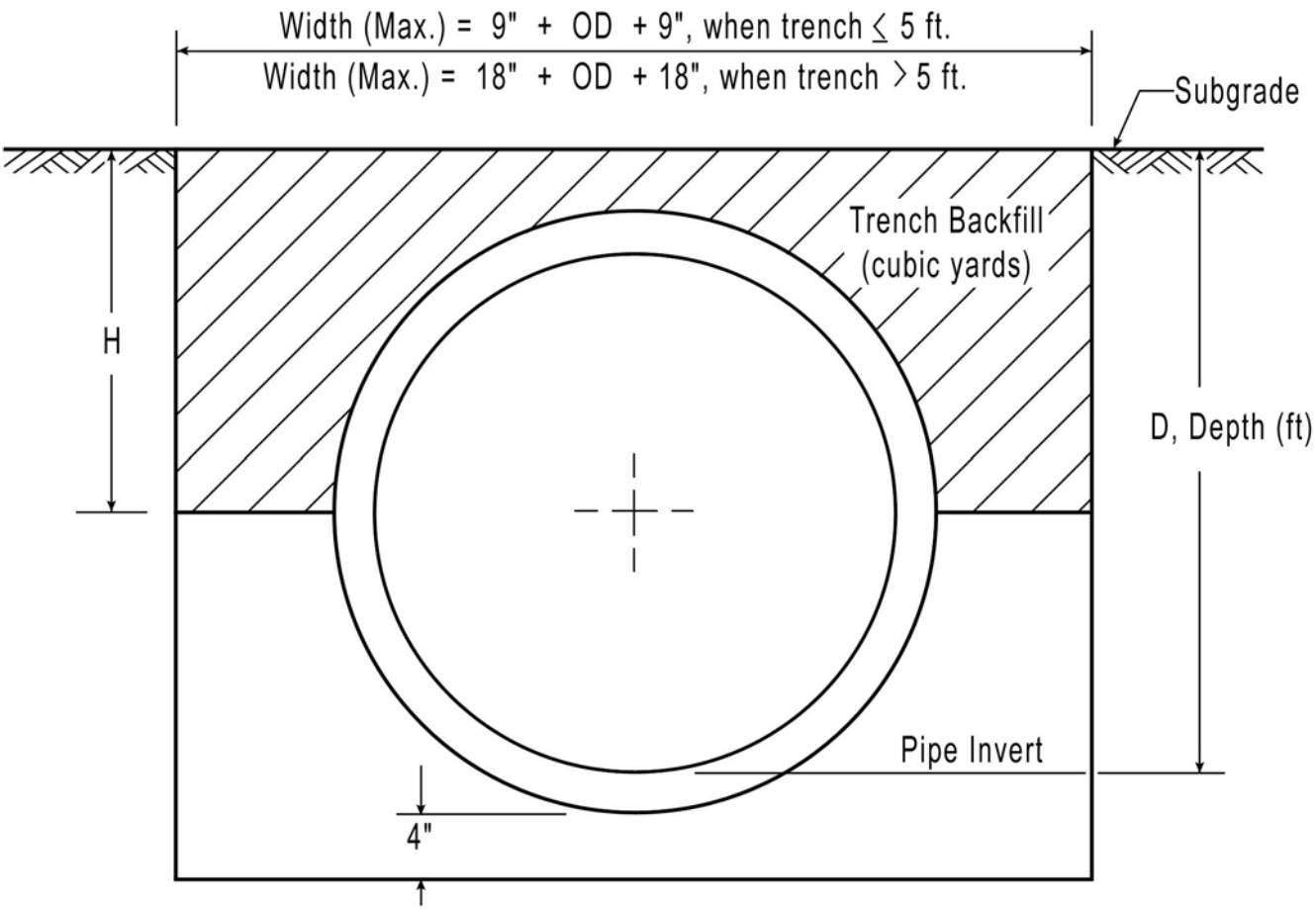

EXAMPLE

Given:	Pipe = 42” Storm Sewer	
	Average Depth, D = 6.8 feet	
	Trench Length = 84.7 feet	
Find:	Cubic Yards of TRENCH BACKFILL	
Solution:	From Table, Cubic yard/lin. ft.	= 1.093
	x Trench length	= x 84.7
	TRENCH BACKFILL	= 92.6 cu. yds.

NOTE: If the field engineer measures a width of trench less than the maximum permitted, the values included herein will be of no value. The actual volume of TRENCH BACKFILL used will therefore have to be calculated using the following formula:

$$\text{Cubic Yards} = \left[(H' x W') - \left(\frac{\text{Pipe End Area}}{2}\right)\right] x\ L'\ x\ 1/27$$

VOLUME OF TRENCH BACKFILL (CU.YDS.) PER LINEAL FT. OF STORM SEWER

D(ft) = Average Depth of Trench from Subgrade to Invert of Pipe

Inside Diameter Wall thickness	8” 1.667”	10” 1.833”	12” 2.00”	15” 2.25”	18” 2.50”	21” 2.75”
2.0	0.138	0.136	0.132	0.121	0.105	0.083
2.2	0.156	0.155	0.152	0.143	0.130	0.111
2.4	0.174	0.175	0.173	0.167	0.155	0.138
2.6	0.192	0.194	0.194	0.190	0.180	0.166
2.8	0.210	0.214	0.215	0.213	0.205	0.193
3.0	0.228	0.234	0.236	0.236	0.231	0.220
3.2	0.246	0.253	0.257	0.259	0.256	0.248
3.4	0.264	0.272	0.278	0.282	0.281	0.275
3.6	0.282	0.292	0.299	0.305	0.307	0.303
3.8	0.300	0.311	0.320	0.329	0.332	0.330
4.0	0.319	0.331	0.341	0.352	0.358	0.358
4.2	0.336	0.350	0.362	0.375	0.383	0.385
4.4	0.354	0.370	0.383	0.398	0.408	0.413
4.6	0.610	0.622	0.632	0.642	0.647	0.647
4.8	0.639	0.653	0.664	0.676	0.684	0.686
5.0	0.668	0.683	0.696	0.711	0.720	0.724
5.2	0.698	0.714	0.728	0.745	0.756	0.763
5.4	0.727	0.745	0.760	0.779	0.793	0.801
5.6	0.756	0.776	0.792	0.813	0.829	0.840
5.8	0.785	0.807	0.824	0.848	0.866	0.879
6.0	0.815	0.837	0.856	0.882	0.902	0.918
6.2	0.844	0.867	0.888	0.916	0.938	0.956
6.4	0.873	0.898	0.921	0.950	0.975	0.994
6.6	0.903	0.929	0.953	0.985	1.011	1.033
6.8	0.932	0.959	0.985	1.019	1.048	1.071
7.0	0.961	0.990	1.017	1.053	1.084	1.110
7.2	0.990	1.021	1.049	1.087	1.121	1.149
7.4	1.019	1.051	1.081	1.122	1.157	1.187
7.6	1.049	1.082	1.113	1.156	1.193	1.226
7.8	1.078	1.113	1.145	1.190	1.230	1.264
8.0	1.107	1.143	1.177	1.224	1.266	1.303
8.2	1.136	1.174	1.209	1.259	1.303	1.342
8.4	1.165	1.205	1.241	1.293	1.340	1.380
8.6	1.195	1.235	1.274	1.328	1.376	1.419
8.8	1.224	1.266	1.306	1.362	1.412	1.458
9.0	1.253	1.297	1.338	1.396	1.449	1.496
9.2	1.282	1.327	1.370	1.430	1.485	1.535
9.4	1.311	1.358	1.402	1.465	1.522	1.574
9.6	1.341	1.389	1.435	1.499	1.558	1.612
9.8	1.370	1.419	1.467	1.533	1.594	1.651
10.0	1.399	1.450	1.499	1.568	1.631	1.689
10.2	1.428	1.481	1.531	1.602	1.667	1.728
10.4	1.457	1.511	1.563	1.636	1.704	1.767
10.6	1.487	1.542	1.595	1.671	1.740	1.805
10.8	1.516	1.573	1.627	1.705	1.776	1.844
11.0	1.545	1.603	1.659	1.739	1.813	1.882
11.2	1.574	1.634	1.691	1.773	1.849	1.921
11.4	1.603	1.665	1.723	1.808	1.886	1.960
11.6	1.633	1.696	1.755	1.842	1.922	1.998
11.8	1.662	1.726	1.788	1.876	1.958	2.037
For each additional 0.2’ depth						
	+0.0292	+0.0307	+0.0321	+0.0343	+0.0364	+0.0386

VOLUME OF TRENCH BACKFILL (CU.YDS.) PER LINEAL FT. OF STORM SEWER

D(ft) = Average Depth of Trench from Subgrade to Invert of Pipe

Inside Diameter Wall thickness	24” 3.00”	27” 3.25”	30” 3.50”	33” 3.75”	36” 4.00”	42” 4.50”
2.4	0.116					
2.6	0.146	0.121				
2.8	0.175	0.152	0.124			
3.0	0.205	0.184	0.158			
3.2	0.235	0.216	0.192	0.163		
3.4	0.264	0.248	0.226	0.199	0.168	
3.6	0.294	0.280	0.260	0.236	0.206	
3.8	0.323	0.311	0.294	0.272	0.244	
4.0	0.353	0.343	0.328	0.308	0.282	0.216
4.2	0.383	0.375	0.362	0.344	0.321	0.259
4.4	0.412	0.407	0.571	0.548	0.520	0.448
4.6	0.642	0.632	0.616	0.595	0.569	0.502
4.8	0.683	0.674	0.661	0.643	0.619	0.556
5.0	0.723	0.717	0.706	0.690	0.668	0.610
5.2	0.764	0.760	0.751	0.737	0.718	0.663
5.4	0.805	0.803	0.796	0.784	0.767	0.717
5.6	0.846	0.846	0.841	0.831	0.816	0.771
5.8	0.886	0.889	0.886	0.879	0.866	0.824
6.0	0.927	0.932	0.931	0.926	0.915	0.878
6.2	0.968	0.975	0.976	0.973	0.964	0.932
6.4	1.009	1.018	1.022	1.020	1.014	0.985
6.6	1.049	1.061	1.067	1.068	1.063	1.039
6.8	1.090	1.103	1.112	1.115	1.113	1.093
7.0	1.131	1.146	1.157	1.162	1.162	1.147
7.2	1.172	1.189	1.202	1.209	1.211	1.200
7.4	1.212	1.232	1.247	1.256	1.261	1.254
7.6	1.253	1.275	1.292	1.304	1.310	1.308
7.8	1.294	1.318	1.337	1.351	1.359	1.361
8.0	1.335	1.361	1.382	1.398	1.409	1.415
8.2	1.375	1.404	1.427	1.445	1.458	1.469
8.4	1.416	1.447	1.473	1.493	1.508	1.523
8.6	1.457	1.490	1.518	1.540	1.557	1.577
8.8	1.498	1.533	1.563	1.587	1.607	1.630
9.0	1.539	1.576	1.608	1.635	1.656	1.684
9.2	1.579	1.619	1.653	1.682	1.706	1.738
9.4	1.620	1.662	1.698	1.729	1.755	1.791
9.6	1.661	1.704	1.743	1.776	1.804	1.845
9.8	1.701	1.747	1.788	1.823	1.854	1.899
10.0	1.742	1.790	1.833	1.871	1.903	1.953
10.2	1.783	1.833	1.878	1.918	1.953	2.006
10.4	1.824	1.876	1.924	1.965	2.002	2.060
10.6	1.864	1.919	1.968	2.012	2.051	2.114
10.8	1.905	1.962	2.013	2.060	2.100	2.167
11.0	1.946	2.005	2.058	2.107	2.150	2.221
11.2	1.987	2.048	2.103	2.154	2.199	2.275
11.4	2.028	2.091	2.148	2.201	2.249	2.328
11.6	2.068	2.133	2.193	2.249	2.298	2.382
11.8	2.109	2.176	2.239	2.296	2.347	2.436
12.0	2.150	2.219	2.284	2.343	2.397	2.490
12.2	2.191	2.262	2.329	2.390	2.446	2.543
For each additional 0.2’ depth:						
	+0.0407	+0.0429	+0.0451	+0.0472	+0.0494	+0.0537

VOLUME OF TRENCH BACKFILL (CU.YDS.) PER LINEAL FT. OF STORM SEWER

D(ft) = Average Depth of Trench from Subgrade to Invert of Pipe	Inside Diameter Wall thickness	48” 5.00”	54” 5.50”	60” 6.00”	66” 6.50”	72” 7.00”	78” 7.50”
	4.6	0.414					
	4.8	0.472					
	5.0	0.530	0.430				
	5.2	0.588	0.492				
	5.4	0.646	0.555				
	5.6	0.704	0.617	0.509			
	5.8	0.762	0.679	0.576			
	6.0	0.820	0.742	0.643			
	6.2	0.878	0.804	0.709	0.594		
	6.4	0.936	0.866	0.776	0.665		
	6.6	0.994	0.929	0.843	0.736	0.608	
	6.8	1.052	0.991	0.909	0.807	0.683	
	7.0	1.110	1.053	0.976	0.878	0.759	
	7.2	1.168	1.116	1.043	0.949	0.834	0.699
	7.4	1.226	1.178	1.109	1.020	0.909	0.778
	7.6	1.284	1.240	1.176	1.091	0.985	0.858
	7.8	1.342	1.303	1.243	1.162	1.060	0.938
	8.0	1.400	1.365	1.309	1.233	1.135	1.017
	8.2	1.458	1.428	1.376	1.304	1.211	1.097
	8.4	1.517	1.490	1.443	1.375	1.286	1.177
	8.6	1.575	1.553	1.510	1.446	1.362	1.257
	8.8	1.633	1.615	1.576	1.517	1.437	1.336
	9.0	1.691	1.677	1.643	1.588	1.512	1.416
	9.2	1.749	1.739	1.710	1.659	1.588	1.495
	9.4	1.807	1.802	1.776	1.730	1.663	1.575
	9.6	1.865	1.864	1.843	1.801	1.738	1.655
	9.8	1.923	1.927	1.910	1.872	1.813	1.734
	10.0	1.981	1.989	1.977	1.943	1.889	1.814
	10.2	2.039	2.051	2.043	2.014	1.964	1.893
	10.4	2.097	2.113	2.110	2.085	2.039	1.973
	10.6	2.155	2.176	2.177	2.156	2.115	2.053
	10.8	2.213	2.238	2.243	2.227	2.190	2.132
	11.0	2.271	2.300	2.310	2.298	2.265	2.212
	11.2	2.329	2.363	2.377	2.369	2.341	2.292
	11.4	2.387	2.425	2.443	2.440	2.416	2.371
	11.6	2.445	2.487	2.509	2.511	2.491	2.451
	11.8	2.503	2.550	2.576	2.582	2.566	2.531
	12.0	2.561	2.612	2.643	2.653	2.642	2.610
	12.2	2.619	2.675	2.709	2.724	2.717	2.690
	12.4	2.677	2.738	2.776	2.795	2.792	2.770
	12.6	2.735	2.800	2.843	2.866	2.868	2.849
	12.8	2.793	2.862	2.909	2.937	2.943	2.929
	13.0	2.852	2.925	2.976	3.008	3.018	3.008
	13.2	2.910	2.987	3.043	3.079	3.094	3.088
	13.4	2.968	3.049	3.110	3.150	3.169	3.168
	13.6	3.026	3.111	3.176	3.221	3.244	3.247
	13.8	3.084	3.174	3.243	3.292	3.320	3.327
	14.0	3.142	3.236	3.310	3.363	3.395	3.407
	14.2	3.200	3.298	3.376	3.434	3.470	3.486
	14.4	3.258	3.361	3.443	3.505	3.545	3.566
	For each additional 0.2’ depth						
		+0.0580	+0.0623	+0.0667	+0.0710	+0.0753	+0.0796

VOLUME OF TRENCH BACKFILL (CU.YDS.) PER LINEAL FT. OF STORM SEWER

D(ft) = Average Depth of Trench from Subgrade to Invert of Pipe

Inside Diameter Wall thickness	84” 8.00”	90” 8.50”	96” 9.00”	102” 9.50”	108” 10.00”
7.8	0.795				
8.0	0.879				
8.2	0.963				
8.4	1.047	0.896			
8.6	1.131	0.984			
8.8	1.215	1.073	0.910	0.726	0.522
9.0	1.299	1.161	1.002	0.823	0.623
9.2	1.382	1.249	1.095	0.920	0.724
9.4	1.466	1.338	1.187	1.017	0.825
9.6	1.550	1.426	1.280	1.114	0.927
9.8	1.634	1.514	1.373	1.211	1.028
10.0	1.718	1.602	1.467	1.307	1.129
10.2	1.802	1.690	1.558	1.404	1.230
10.4	1.886	1.778	1.650	1.501	1.331
10.6	1.970	1.866	1.743	1.598	1.433
10.8	2.054	1.955	1.835	1.695	1.534
11.0	2.138	2.043	1.928	1.792	1.635
11.2	2.222	2.131	2.021	1.889	1.737
11.4	2.306	2.220	2.113	1.986	1.838
11.6	2.390	2.308	2.206	2.083	1.939
11.8	2.474	2.396	2.298	2.180	2.040
12.0	2.558	2.485	2.391	2.277	2.141
12.2	2.642	2.573	2.484	2.374	2.243
12.4	2.726	2.661	2.576	2.471	2.344
12.6	2.810	2.749	2.669	2.567	2.445
12.8	2.894	2.838	2.761	2.664	2.547
13.0	2.978	2.926	2.854	2.761	2.648
13.2	3.062	3.014	2.947	2.858	2.749
13.4	3.146	3.102	3.039	2.955	2.850
13.6	3.230	3.191	3.132	3.052	2.951
13.8	3.314	3.279	3.224	3.149	3.053
14.0	3.398	3.367	3.317	3.246	3.154
14.2	3.482	3.455	3.410	3.343	3.255
14.4	3.566	3.544	3.502	3.440	3.357
14.6	3.649	3.632	3.595	3.537	3.458
14.8	3.733	3.720	3.687	3.634	3.559
15.0	3.817	3.809	3.780	3.730	3.660
15.2	3.901	3.897	3.873	3.827	3.761
15.4	3.985	3.985	3.965	3.924	3.863
15.6	4.069	4.074	4.058	4.021	3.964
15.8	4.153	4.162	4.150	4.118	4.065
16.0	4.237	4.250	4.243	4.215	4.166
16.2	4.321	4.338	4.335	4.312	4.268
16.4	4.405	4.426	4.428	4.409	4.369
16.6	4.488	4.515	4.521	4.506	4.470
16.8	4.572	4.603	4.613	4.603	4.571
17.0	4.656	4.691	4.706	4.699	4.672
17.2	4.740	4.780	4.798	4.796	4.774
17.4	4.824	4.868	4.891	4.893	4.875
17.6	4.908	4.956	4.984	4.990	4.976
For each additional 0.2’ depth:					
	+0.0839	+0.0883	+0.0926	+0.0969	+0.1012

TRENCH BACKFILL TABLE FOR ELLIPTICAL PIPES, ENGLISH

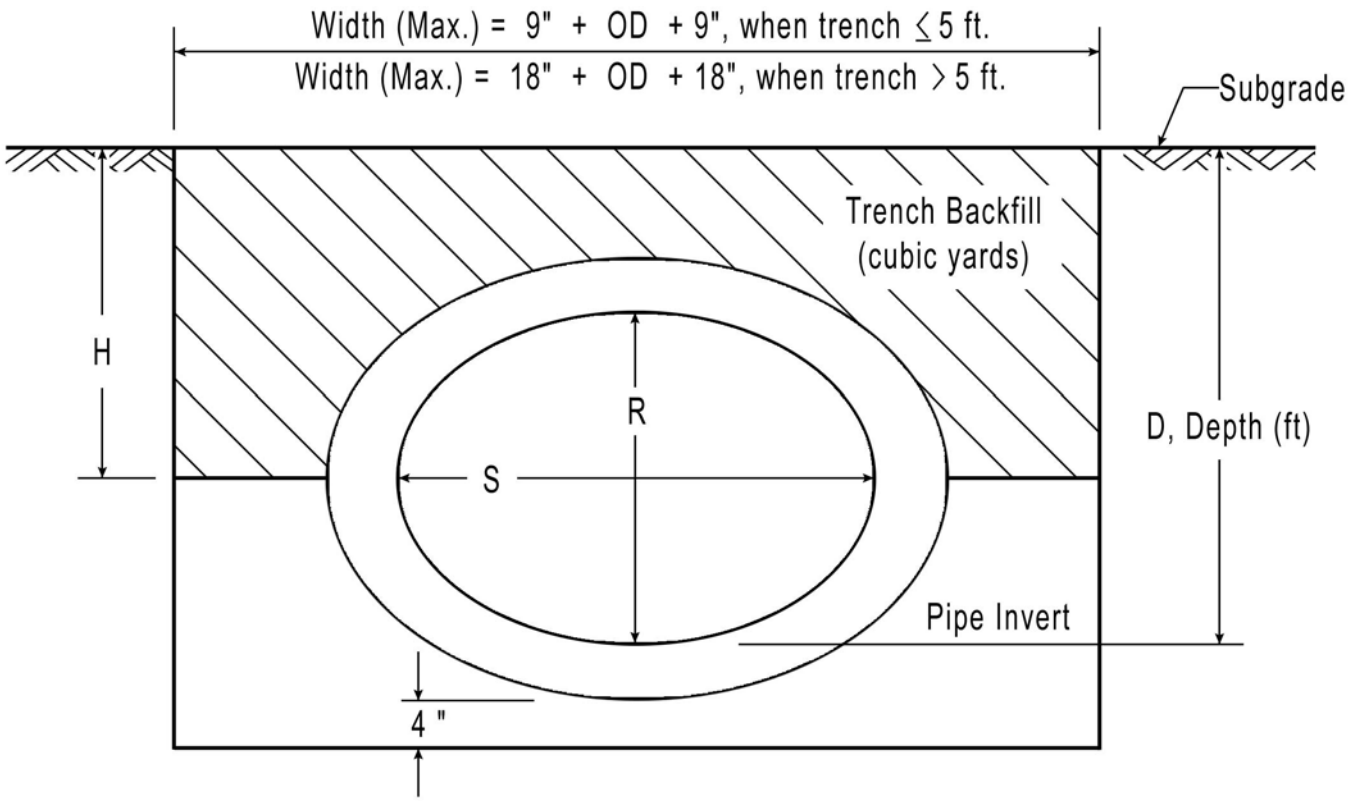

EXAMPLE

Given:	Pipe = 38” rise x 60” span, Storm Sewer	
	Average Depth, D = 4.6 feet	
	Trench Length = 82.5 feet	
Find:	Cubic Yards of TRENCH BACKFILL	
Solution:	From Table, Cubic yard/lin. ft.	= 0.645
	x Trench length	= x 82.5
	TRENCH BACKFILL	= 53.2 cu. yds.

NOTE: If the field engineer measures a width of trench less than the maximum permitted, the values included herein will be of no value. The actual volume of TRENCH BACKFILL used will therefore have to be calculated using the following formula:

$$\text{Cubic Yards} = \left[(H' x W') - \left(\frac{\text{Pipe End Area}}{2}\right)\right] x\ L'\ x\ 1/27$$

VOLUME OF TRENCH BACKFILL (CU. YDS)
PER LINEAL FOOT OF ELLIPTICAL STORM SEWER PIPE

Eq. Round Size, in.	18	24	27	30	33	36	39	42
Rise, in.	14	19	22	24	27	29	32	34
Span, in.	23	30	34	38	42	45	49	53
Wall Thickness, in.	2.75	3.25	3.50	3.75	3.75	4.50	4.75	5.00
Pipe End Area, sq. ft.	3.03	5.08	6.49	7.82	9.31	11.19	13.24	15.12
D(ft) = Average Depth of Trench from Subgrade to Invert of Pipe								
1.4	0.061							
1.6	0.090							
1.8	0.118							
2.0	0.147	0.109						
2.2	0.176	0.143	0.114					
2.4	0.205	0.177	0.150	0.130				
2.6	0.233	0.210	0.186	0.169	0.135			
2.8	0.262	0.244	0.223	0.208	0.176	0.146		
3.0	0.291	0.277	0.259	0.247	0.218	0.191		
3.2	0.319	0.311	0.296	0.286	0.260	0.235	0.196	
3.4	0.348	0.345	0.332	0.326	0.301	0.280	0.243	0.216
3.6	0.377	0.378	0.369	0.365	0.343	0.324	0.290	0.266
3.8	0.406	0.412	0.405	0.404	0.385	0.369	0.337	0.316
4.0	0.434	0.446	0.441	0.443	0.426	0.413	0.384	0.366
4.2	0.463	0.479	0.478	0.482	0.468	0.458	0.432	0.416
4.4	0.492	0.713	0.708	0.710	0.692	0.679	0.649	0.632
4.6	0.743	0.758	0.755	0.761	0.745	0.735	0.708	0.693
4.8	0.783	0.803	0.803	0.811	0.797	0.790	0.766	0.754
5.0	0.823	0.848	0.805	0.861	0.850	0.846	0.824	0.815
5.2	0.863	0.892	0.898	0.912	0.903	0.902	0.883	0.876
5.4	0.903	0.937	0.945	0.962	0.956	0.957	0.941	0.937
5.6	0.943	0.982	0.993	1.012	1.008	1.013	0.999	0.998
5.8	0.982	1.027	1.040	1.063	1.061	1.068	1.058	1.059
6.0	1.022	1.071	1.088	1.113	1.114	1.124	1.116	1.120
6.2	1.062	1.116	1.136	1.163	1.167	1.179	1.174	1.182
6.4	1.102	1.161	1.183	1.214	1.220	1.235	1.233	1.243
6.6	1.142	1.206	1.231	1.264	1.272	1.290	1.291	1.304
6.8	1.181	1.250	1.278	1.314	1.325	1.346	1.349	1.365
7.0	1.221	1.295	1.326	1.364	1.378	1.402	1.408	1.426
7.2	1.261	1.340	1.373	1.415	1.431	1.457	1.466	1.487
7.4	1.301	1.385	1.421	1.465	1.483	1.513	1.524	1.548
7.6	1.341	1.429	1.468	1.515	1.536	1.568	1.583	1.609
7.8	1.381	1.474	1.516	1.566	1.589	1.624	1.641	1.670
8.0	1.420	1.519	1.563	1.616	1.642	1.679	1.699	1.732
8.2	1.460	1.564	1.611	1.666	1.695	1.735	1.758	1.793
8.4	1.500	1.608	1.658	1.717	1.747	1.790	1.816	1.854
8.6	1.540	1.653	1.706	1.767	1.800	1.846	1.874	1.915
8.8	1.580	1.698	1.753	1.817	1.853	1.902	1.933	1.976
9.0	1.619	1.743	1.801	1.868	1.906	1.957	1.991	2.037
For each additional 0.2 ft. depth								
	+0.040	+0.045	+0.048	+0.050	+0.053	+0.056	+0.058	+0.061

VOLUME OF TRENCH BACKFILL (CU. YDS)
PER LINEAL FOOT OF ELLIPTICAL STORM SEWER PIPE

Eq. Round Size, in.	48	54	60	66	72	78	84	90
Rise, in.	38	43	48	53	58	63	68	72
Span, in.	60	68	76	83	91	98	106	113
Wall Thickness, in.	5.50	6.00	6.50	7.00	7.50	8.00	8.50	9.00
Pipe End Area, sq. ft.	18.98	24.00	29.61	35.45	42.20	49.12	57.02	64.30
D(ft) = Average Depth of Trench from Subgrade to Invert of Pipe								
3.8	0.258							
4.0	0.312							
4.2	0.367	0.418						
4.4	0.579	0.489						
4.6	0.645	0.561	0.455					
4.8	0.711	0.633	0.532					
5.0	0.777	0.704	0.609	0.490				
5.2	0.843	0.776	0.686	0.572				
5.4	0.909	0.847	0.763	0.654				
5.6	0.975	0.919	0.841	0.736	0.614			
5.8	1.041	0.991	0.918	0.818	0.701			
6.0	1.107	1.062	0.995	0.900	0.789	0.653		
6.2	1.173	1.134	1.072	0.982	0.877	0.745		
6.4	1.239	1.205	1.149	1.064	0.964	0.838	0.694	
6.6	1.305	1.277	1.226	1.146	1.052	0.931	0.792	
6.8	1.371	1.349	1.304	1.228	1.140	1.023	0.891	0.768
7.0	1.437	1.420	1.381	1.311	1.227	1.116	0.989	0.871
7.2	1.503	1.492	1.458	1.393	1.315	1.208	1.087	0.974
7.4	1.570	1.564	1.535	1.475	1.402	1.301	1.185	1.077
7.6	1.636	1.635	1.612	1.557	1.490	1.394	1.283	1.180
7.8	1.702	1.707	1.689	1.639	1.578	1.486	1.381	1.283
8.0	1.768	1.778	1.766	1.721	1.665	1.579	1.480	1.386
8.2	1.834	1.850	1.844	1.803	1.753	1.671	1.578	1.489
8.4	1.900	1.922	1.921	1.885	1.841	1.764	1.676	1.593
8.6	1.966	1.993	1.998	1.967	1.928	1.857	1.774	1.696
8.8	2.032	2.065	2.075	2.049	2.016	1.949	1.872	1.799
9.0	2.098	2.136	2.152	2.132	2.104	2.042	1.970	1.902
9.2	2.164	2.208	2.229	2.214	2.191	2.134	2.068	2.005
6.4	2.230	2.280	2.307	2.296	2.279	2.227	2.167	2.108
9.6	2.296	2.351	2.384	2.378	2.367	2.320	2.265	2.211
9.8	2.362	2.423	2.461	2.460	2.454	2.412	2.363	2.314
10.0	2.428	2.494	2.538	2.542	2.542	2.505	2.461	2.417
10.2	2.494	2.566	2.615	2.624	2.630	2.597	2.559	2.520
10.4	2.560	2.638	2.692	2.706	2.717	2.690	2.657	2.623
10.6	2.626	2.709	2.770	2.788	2.805	2.783	2.755	2.726
10.8	2.692	2.781	2.847	2.870	2.893	2.875	2.854	2.830
11.0	2.758	2.852	2.924	2.953	2.980	2.968	2.952	2.933
11.2	2.824	2.924	3.001	3.035	3.068	3.060	3.050	3.036
11.4	2.891	2.996	3.078	3.117	3.156	3.153	3.148	3.139
For each additional 0.2 ft. depth:								
	+0.066	+0.072	+0.077	+0.082	+0.088	+0.093	+0.098	+0.103

VOLUME OF TRENCH BACKFILL (CU. YDS)
PER LINEAL FOOT OF ELLIPTICAL STORM SEWER PIPE

Eq. Round Size, in.	96	102	108	114	120	132	144
Rise, in.	77	82	87	92	97	106	116
Span, in.	121	128	136	143	151	66	180
Wall Thickness, in.	9.50	9.75	10.00	10.50	11.00	12.00	13.00
Pipe End Area, sq. ft.	73.30	81.66	91.04	101.08	112.28	134.72	159.55
D(ft) = Average Depth of Trench from Subgrade to Invert of Pipe							
7.2	0.811						
7.4	0.919						
7.6	1.028						
7.8	1.137	0.970					
8.0	1.245	1.084					
8.2	1.354	1.197	1.025				
8.4	1.463	1.310	1.144				
8.6	1.517	1.423	1.262	1.071			
8.8	1.680	1.537	1.381	1.194			
9.0	1.789	1.650	1.499	1.318	1.119		
9.2	1.897	1.763	1.618	1.441	1.248		
9.4	2.006	1.877	1.736	1.564	1.377		
9.6	2.115	1.990	1.855	1.688	1.506		
9.8	2.223	2.103	1.973	1.811	1.635		
10.0	2.332	2.216	2.092	1.935	1.764	1.400	
10.2	2.440	2.330	2.210	2.058	1.893	1.539	
10.4	2.549	2.443	2.329	2.182	2.022	1.679	
10.6	2.658	2.556	2.447	2.305	2.151	1.818	
10.8	2.766	2.669	2.566	2.429	2.280	1.958	1.502
11.0	2.875	2.783	2.684	2.552	2.409	2.097	1.651
11.2	2.984	2.896	2.803	2.676	2.538	2.237	1.801
11.4	3.092	3.009	2.921	2.799	2.667	2.376	1.950
11.6	3.201	3.123	3.040	2.922	2.796	2.516	2.100
11.8	3.310	3.236	3.159	3.046	2.925	2.655	2.249
12.0	3.418	3.349	3.277	3.169	3.054	2.795	2.398
12.2	3.527	3.462	3.396	3.293	3.183	2.934	2.548
12.4	3.636	3.576	3.514	3.416	3.312	3.074	2.697
12.6	3.744	3.689	3.633	3.540	3.441	3.213	2.847
12.8	3.853	3.802	3.751	3.663	3.570	3.353	2.996
13.0	3.961	3.915	3.870	3.787	3.699	3.492	3.145
13.2	4.070	4.029	3.988	3.910	3.828	3.632	3.295
13.4	4.179	4.142	4.107	4.034	3.957	3.771	3.444
13.6	4.267	4.255	4.225	4.157	4.086	3.911	3.593
13.8	4.396	4.369	4.344	4.280	4.215	4.050	3.743
14.0	4.505	4.482	4.462	4.404	4.344	4.190	3.892
14.2	4.613	4.595	4.581	4.527	4.473	4.329	4.042
14.4	4.722	4.708	4.699	4.651	4.602	4.469	4.191
14.6	4.831	4.822	4.818	4.774	4.731	4.608	4.340
14.8	4.939	4.935	4.936	4.898	4.860	4.748	4.490
For each additional 0.2 ft. depth:							
	+0.109	+0.113	+0.119	+0.123	+0.129	+0.140	+0.149

TRENCH BACKFILL FOR ARCH PIPE, ENGLISH

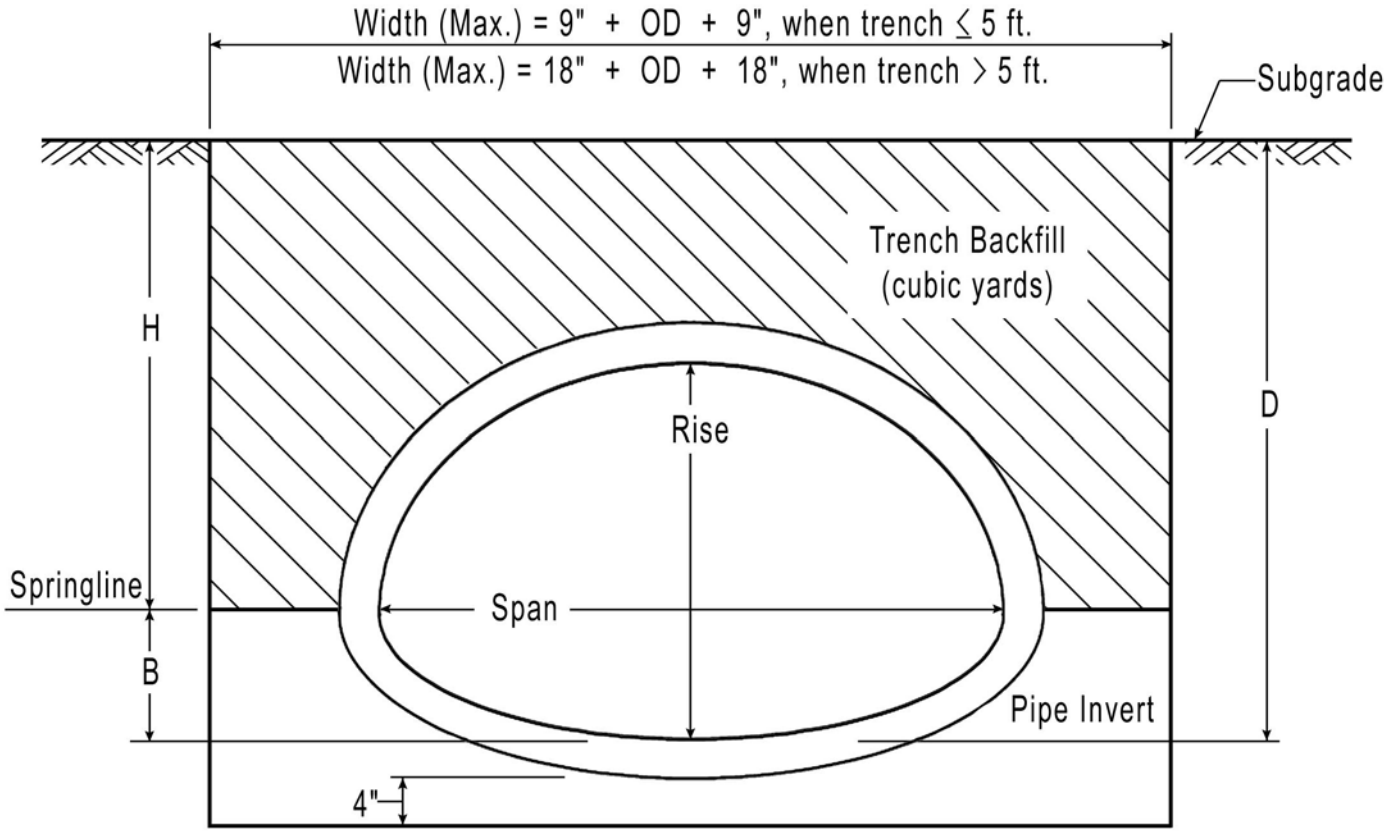

W = Width of Trench (ft.)
D = Depth from Subgrade to Pipe Invert (ft.)
H = Height of Trench Backfill Limits (ft) = (D – B)
B = Distance from Pipe Invert to Springline (ft.) (See Table)
L = Length of Trench (ft.)
A = End Area of Pipe above Springline (Sq. ft.) (See Table)

Volume (Cu. Yds.) = [(H x W) – A] x L x 1/27

This formula should be used by the designer or field engineer to determine the volume of TRENCH BACKFILL that should be paid for when backfilling storm sewer trenches utilizing reinforced concrete ARCH PIPE. Maximum trench widths permitted by Article 550.04 of the Standard Specifications are used.

Equivalent Round Size (in.)	Rise (in.)	Span (in.)	Wall Thickness (in.)	End Area Above Springline (sq. ft.)	B (ft.)
15	11.00	18.00	2.25	1.08	0.39
18	13.50	22.00	2.50	1.42	0.50
21	15.50	26.00	2.75	1.94	0.52
24	18.00	28.50	3.00	2.77	0.49
27	22.50	36.25	3.50	4.20	0.64
30	22.50	36.25	3.50	4.20	0.64
36	26.63	43.75	4.00	6.04	0.71
42	31.31	51.13	4.50	8.20	0.84
48	36.00	58.50	5.00	10.67	0.97
54	40.00	65.00	5.50	13.07	1.08
60	45.00	73.00	6.00	16.34	1.22
66	54.00	88.00	7.00	23.76	1.42
72	54.00	88.00	7.00	23.76	1.42
84	62.00	102.00	8.00	32.10	1.55
90	72.00	115.00	8.50	39.65	1.98
96	77.25	122.00	9.00	46.07	2.03
108	87.13	138.00	10.00	59.07	2.24
120	96.88	154.00	11.00	71.05	2.61
132	106.50	168.75	10.00	72.95	3.79

EXAMPLE

Given: Pipe = 30” Round size eq., rise = 22.5”, span = 36.25”

Average Depth, D = 4.7 feet

Trench Length = 82.3 feet

Width, W = 6.6 feet

Find: Cubic Yards of TRENCH BACKFILL

Solution: From Table, End Area, A = 4.20 sq. ft.

B = 0.64 ft.

Pay Height, H = D – B = 4.70 – 0.64 = 4.06 ft

Volume = [(H x W) – A] x L x 1/27

= [(4.06) (6.6) – 4.20] (82.3) (1/27)

TRENCH BACKFILL = 68.9 cu. yds.

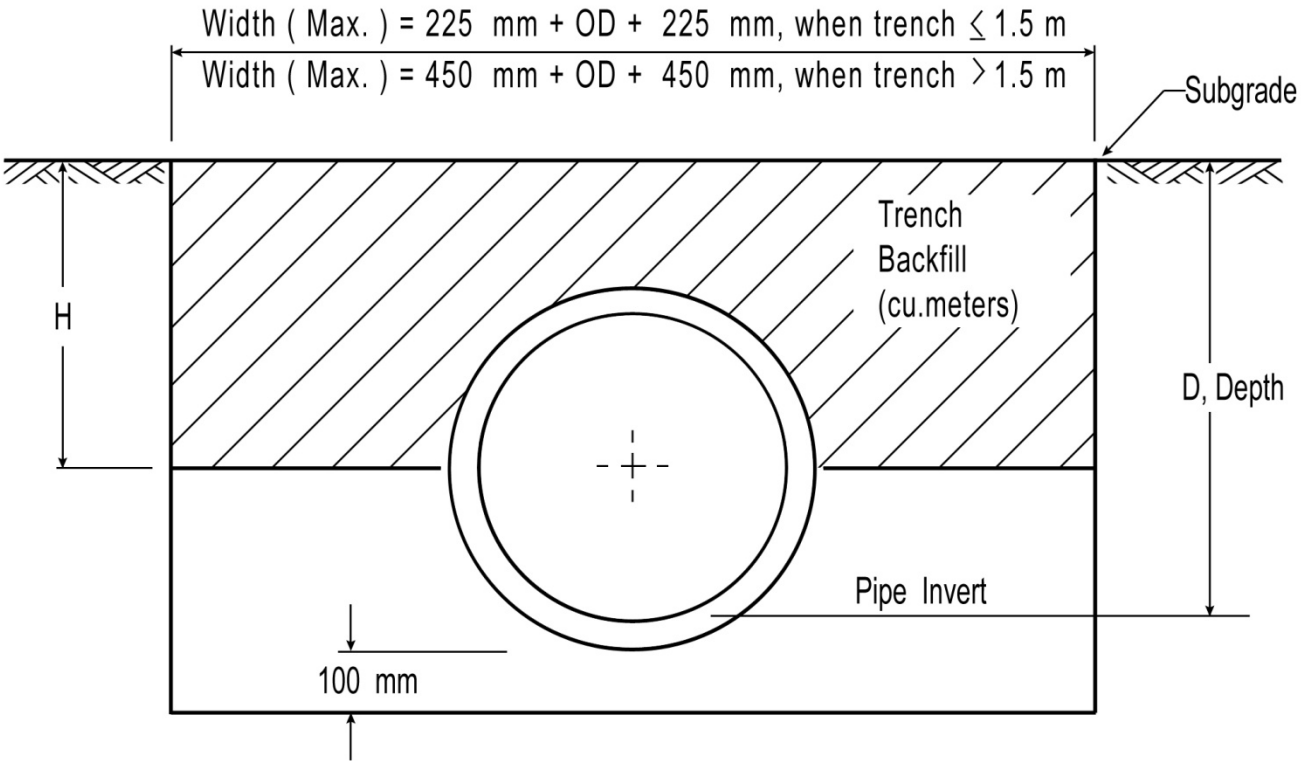

EXAMPLE

Given:	Pipe = 1050 mm Storm Sewer	
	Average Depth, D = 2.10 m	
	Trench Length = 25.8 m	
Find:	Cubic Meters of TRENCH BACKFILL	
Solution:	From Table, cubic meters/linear meter	2.937 m^2
	x Trench length	x 25.8m
	TRENCH BACKFILL VOLUME	= 75.8 m^3

Note: If the field engineer measures a width of trench less than the maximum permitted, the values included herein will be of no value. The actual volume of TRENCH BACKFILL used will therefore have to be calculated using the following formula:

Cubic Meters = [(H x W) - (Pipe End Area)/2] x L

VOLUME OF TRENCH BACKFILL (CU. METERS)
PER LINEAL METER OF CIRCULAR STORM SEWER

Note: The calculated volumes are based on the use of standard English sized pipes that meet the tolerances of the Metric pay items.

Nominal Diameter (mm)	200 (8")	250 (10")	300 (12")	375 (15")	450 (18")	525 (21")
Wall Thickness (mm)	42	47	51	57	64	70
End Area (sq meters)	0.065	0.095	0.130	0.193	0.268	0.356
D(m) = Average Depth of Trench from Subgrade to Invert of Pipe						
0.50	0.261	0.250	0.233	0.196		
0.55	0.298	0.290	0.276	0.243	0.198	
0.60	0.335	0.330	0.318	0.291	0.250	
0.65	0.372	0.370	0.361	0.338	0.302	0.253
0.70	0.409	0.409	0.404	0.385	0.353	0.309
0.75	0.446	0.449	0.447	0.433	0.405	0.365
0.80	0.483	0.489	0.490	0.480	0.457	0.421
0.85	0.520	0.529	0.533	0.527	0.509	0.477
0.90	0.557	0.569	0.575	0.574	0.560	0.533
0.95	0.593	0.609	0.618	0.622	0.612	0.589
1.00	0.630	0.649	0.661	0.669	0.664	0.646
1.05	0.667	0.688	0.704	0.716	0.715	0.702
1.10	0.704	0.728	0.747	0.763	0.767	0.758
1.15	0.741	0.768	0.789	0.811	0.819	0.814
1.20	0.778	0.808	0.832	0.858	0.871	0.870
1.25	0.815	0.848	0.875	0.905	0.922	0.926
1.30	0.852	0.888	0.918	0.952	0.974	0.983
1.35	0.889	0.928	1.619	1.637	1.642	1.635
1.40	1.640	1.668	1.690	1.712	1.722	1.718
1.45	1.704	1.735	1.760	1.787	1.801	1.802
1.50	1.768	1.802	1.830	1.862	1.880	1.886
1.55	1.833	1.870	1.901	1.937	1.959	1.969
1.60	1.897	1.937	1.971	2.011	2.039	2.053
1.65	1.962	2.004	2.041	2.086	2.118	2.136
1.70	2.026	2.072	2.112	2.161	2.197	2.220
1.75	2.090	2.139	2.182	2.236	2.276	2.304
1.80	2.155	2.206	2.252	2.310	2.355	2.387
1.85	2.219	2.274	2.323	2.385	2.435	2.471
1.90	2.284	2.341	2.393	2.460	2.514	2.555
1.95	2.348	2.409	2.463	2.535	2.593	2.638
2.00	2.412	2.476	2.534	2.609	2.672	2.722
2.05	2.477	2.543	2.604	2.684	2.751	2.806
2.10	2.541	2.611	2.674	2.759	2.831	2.889
2.15	2.606	2.678	2.745	2.834	2.910	2.973
2.20	2.670	2.745	2.815	2.908	2.989	3.057
2.25	2.734	2.813	2.885	2.983	3.068	3.140
2.30	2.799	2.880	2.956	3.058	3.147	3.224
2.35	2.863	2.947	3.026	3.133	3.227	3.308
2.40	2.927	3.015	3.096	3.208	3.306	3.391
2.45	2.992	3.082	3.166	3.282	3.385	3.475
2.50	3.056	3.149	3.237	3.357	3.464	3.559
2.55	3.121	3.217	3.307	3.432	3.544	3.642
2.60	3.185	3.284	3.377	3.507	3.623	3.726
2.65	3.249	3.351	3.448	3.581	3.702	3.810
2.70	3.314	3.419	3.518	3.656	3.781	3.893
2.75	3.378	3.486	3.588	3.731	3.860	3.977
2.80	3.443	3.554	3.659	3.806	3.940	4.061
2.85	3.507	3.621	3.729	3.880	4.019	4.144
2.90	3.571	3.688	3.799	3.955	4.098	4.228
2.95	3.636	3.756	3.870	4.030	4.177	4.312
3.00	3.700	3.823	3.940	4.105	4.256	4.395
For each additional 0.05 meter depth:						
	+0.064	+0.067	+0.070	+0.075	+0.079	+0.084

VOLUME OF TRENCH BACKFILL (CU. METERS)
PER LINEAL METER OF CIRCULAR STORM SEWER

Note: The calculated volumes are based on the use of standard English sized pipes that meet the tolerances of the Metric pay items.

Nominal Dia. (mm)	600 (24")	675 (27")	750 (30")	825 (33")	900 (36")	1050 (42")
Wall Thickness (mm)	76	83	89	95	102	114
End Area (sq meters)	0.456	0.569	0.694	0.831	0.981	1.318
D(m) = Average Depth of Trench from Subgrade to Invert of Pipe						
0.70	0.251					
0.75	0.312					
0.80	0.372	0.310				
0.85	0.433	0.375				
0.90	0.493	0.440	0.374			
0.95	0.554	0.505	0.444	0.369		
1.00	0.615	0.570	0.513	0.443		
1.05	0.675	0.636	0.583	0.517	0.439	
1.10	0.736	0.701	0.652	0.591	0.517	
1.15	0.796	0.766	0.722	0.665	0.596	
1.20	0.857	0.831	0.791	0.739	0.674	0.505
1.25	0.918	0.896	0.861	0.813	0.752	0.592
1.30	0.978	0.961	0.930	0.887	1.294	1.101
1.35	1.614	1.580	1.533	1.473	1.400	1.215
1.40	1.702	1.672	1.630	1.574	1.506	1.330
1.45	1.790	1.765	1.727	1.676	1.612	1.445
1.50	1.878	1.857	1.824	1.777	1.718	1.560
1.55	1.966	1.950	1.921	1.879	1.824	1.675
1.60	2.054	2.042	2.018	1.980	1.930	1.789
1.65	2.142	2.135	2.115	2.082	2.035	1.904
1.70	2.230	2.228	2.212	2.183	2.141	2.019
1.75	2.318	2.320	2.309	2.284	2.247	2.134
1.80	2.407	2.413	2.406	2.386	2.353	2.248
1.85	2.495	2.505	2.503	2.487	2.459	2.363
1.90	2.583	2.598	2.600	2.589	2.565	2.478
1.95	2.671	2.690	2.697	2.690	2.671	2.593
2.00	2.759	2.783	2.794	2.792	2.777	2.707
2.05	2.847	2.875	2.891	2.893	2.882	2.822
2.10	2.935	2.968	2.988	2.994	2.988	2.937
2.15	3.023	3.060	3.085	3.096	3.094	3.052
2.20	3.111	3.153	3.182	3.197	3.200	3.167
2.25	3.199	3.246	3.279	3.299	3.306	3.281
2.30	3.288	3.338	3.376	3.400	3.412	3.396
2.35	3.376	3.431	3.473	3.502	3.518	3.511
2.40	3.464	3.523	3.570	3.603	3.624	3.626
2.45	3.552	3.616	3.667	3.705	3.729	3.740
2.50	3.640	3.708	3.764	3.806	3.835	3.855
2.55	3.728	3.801	3.861	3.907	3.941	3.970
2.60	3.816	3.893	3.958	4.009	4.047	4.085
2.65	3.904	3.986	4.055	4.110	4.153	4.199
2.70	3.992	4.078	4.152	4.212	4.259	4.314
2.75	4.080	4.171	4.249	4.313	4.365	4.429
2.80	4.169	4.264	4.346	4.415	4.471	4.544
2.85	4.257	4.356	4.443	4.516	4.577	4.659
2.90	4.345	4.449	4.540	4.617	4.682	4.773
2.95	4.433	4.541	4.637	4.719	4.788	4.888
3.00	4.521	4.634	4.733	4.820	4.894	5.003
3.05	4.609	4.726	4.830	4.922	5.000	5.118
3.10	4.697	4.819	4.927	5.023	5.106	5.232
3.15	4.785	4.911	5.024	5.125	5.212	5.347
3.20	4.873	5.004	5.121	5.226	5.318	5.462
For each additional 0.05 meter depth:						
	+0.088	+0.093	+0.097	+0.101	+0.106	+0.115

VOLUME OF TRENCH BACKFILL (CU. METERS)
PER LINEAL METER OF CIRCULAR STORM SEWER

Note: The calculated volumes are based on the use of standard English sized pipes that meet the tolerances of the Metric pay items.

D(m) = Average Depth of Trench from Subgrade to Invert of Pipe						
Nominal Dia. (mm)	1200 (48")	1350 (54")	1500 (60")	1650 (66)	1800 (72")	1950 (78")
Wall Thickness (mm)	127	140	152	165	178	191
End Area (sq meters)	1.705	2.141	2.627	3.162	3.748	4.383
1.35	0.979	0.000	0.000	0.000	0.000	0.000
1.40	1.103	0.000	0.000	0.000	0.000	0.000
1.45	1.226	0.000	0.000	0.000	0.000	0.000
1.50	1.350	0.000	0.000	0.000	0.000	0.000
1.55	1.474	1.221	0.000	0.000	0.000	0.000
1.60	1.597	1.353	0.000	0.000	0.000	0.000
1.65	1.721	1.486	0.000	0.000	0.000	0.000
1.70	1.844	1.618	1.340	0.000	0.000	0.000
1.75	1.968	1.751	1.481	0.000	0.000	0.000
1.80	2.092	1.883	1.623	0.000	0.000	0.000
1.85	2.215	2.016	1.764	1.461	0.000	0.000
1.90	2.339	2.148	1.906	1.611	0.000	0.000
1.95	2.463	2.281	2.047	1.762	0.000	0.000
2.00	2.586	2.414	2.189	1.912	0.000	0.000
2.05	2.710	2.546	2.330	2.062	1.742	0.000
2.10	2.834	2.679	2.472	2.213	1.902	0.000
2.15	2.957	2.811	2.613	2.363	2.061	0.000
2.20	3.081	2.944	2.754	2.513	2.220	1.875
2.25	3.205	3.076	2.896	2.664	2.379	2.043
2.30	3.328	3.209	3.037	2.814	2.539	2.211
2.35	3.452	3.341	3.179	2.964	2.698	2.379
2.40	3.576	3.474	3.320	3.115	2.857	2.547
2.45	3.699	3.606	3.462	3.265	3.016	2.716
2.50	3.823	3.739	3.603	3.415	3.175	2.884
2.55	3.947	3.872	3.745	3.566	3.335	3.052
2.60	4.070	4.004	3.886	3.716	3.494	3.220
2.65	4.194	4.137	4.027	3.866	3.653	3.388
2.70	4.318	4.269	4.169	4.017	3.812	3.556
2.75	4.441	4.402	4.310	4.167	3.971	3.724
2.80	4.565	4.534	4.452	4.317	4.131	3.892
2.85	4.689	4.667	4.593	4.467	4.290	4.060
2.90	4.812	4.799	4.735	4.618	4.449	4.229
2.95	4.936	4.932	4.876	4.768	4.608	4.397
3.00	5.060	5.065	5.017	4.918	4.768	4.565
3.05	5.183	5.197	5.159	5.069	4.927	4.733
3.10	5.307	5.330	5.300	5.219	5.086	4.901
3.15	5.431	5.462	5.442	5.369	5.245	5.069
3.20	5.554	5.595	5.583	5.520	5.404	5.237
3.25	5.678	5.727	5.725	5.670	5.564	5.405
3.30	5.802	5.860	5.866	5.820	5.723	5.573
3.35	5.925	5.992	6.008	5.971	5.882	5.742
3.40	6.049	6.125	6.149	6.121	6.041	5.910
3.45	6.173	6.257	6.290	6.271	6.201	6.078
3.50	6.296	6.390	6.432	6.422	6.360	6.246
3.55	6.420	6.523	6.573	6.572	6.519	6.414
3.60	6.544	6.655	6.715	6.722	6.678	6.582
3.65	6.667	6.788	6.856	6.873	6.837	6.750
3.70	6.791	6.920	6.998	7.023	6.997	6.918
3.75	6.915	7.053	7.139	7.173	7.156	7.086
3.80	7.038	7.185	7.281	7.324	7.315	7.255
3.85	7.162	7.318	7.422	7.474	7.474	7.423
For each additional 0.05 meter depth:						
	+0.124	+0.133	+0.141	+0.150	+0.159	+0.168

VOLUME OF TRENCH BACKFILL (CU. METERS)
PER LINEAL METER OF CIRCULAR STORM SEWER

Note: The calculated volumes are based on the use of standard English sized pipes that meet the tolerances of the Metric pay items.

D(m) = Average Depth of Trench from Subgrade to Invert of Pipe					
Nominal Dia. (mm)	2100 (84")	2250 (90")	2400 (96")	2550 (102")	2700 (108")
Wall Thickness (mm)	203	216	229	241	254
End Area (sq meters)	5.067	5.801	6.585	7.419	8.302
2.35	2.009				
2.40	2.186				
2.45	2.363				
2.50	2.540				
2.55	2.717	2.330			
2.60	2.894	2.516			
2.65	3.071	2.702			
2.70	3.248	2.888	2.476		
2.75	3.425	3.074	2.671		
2.80	3.602	3.260	2.866		
2.85	3.779	3.446	3.060	2.623	
2.90	3.956	3.632	3.255	2.827	
2.95	4.133	3.817	3.450	3.030	
3.00	4.310	4.003	3.645	3.234	2.772
3.05	4.487	4.189	3.839	3.438	2.984
3.10	4.664	4.375	4.034	3.642	3.197
3.15	4.841	4.561	4.229	3.845	3.409
3.20	5.018	4.747	4.424	4.049	3.622
3.25	5.195	4.933	4.619	4.253	3.835
3.30	5.372	5.119	4.813	4.456	4.047
3.35	5.549	5.305	5.008	4.660	4.260
3.40	5.726	5.490	5.203	4.864	4.472
3.45	5.903	5.676	5.398	5.067	4.685
3.50	6.080	5.862	5.592	5.271	4.897
3.55	6.257	6.048	5.787	5.475	5.110
3.60	6.434	6.234	5.982	5.678	5.322
3.65	6.611	6.420	6.177	5.882	5.535
3.70	6.788	6.606	6.372	6.086	5.748
3.75	6.965	6.792	6.566	6.289	5.960
3.80	7.142	6.978	6.761	6.493	6.173
3.85	7.319	7.163	6.956	6.697	6.385
3.90	7.496	7.349	7.151	6.900	6.598
3.95	7.673	7.535	7.346	7.104	6.810
4.00	7.850	7.721	7.540	7.308	7.023
4.05	8.027	7.907	7.735	7.511	7.235
4.10	8.204	8.093	7.930	7.715	7.448
4.15	8.381	8.279	8.125	7.919	7.661
4.20	8.558	8.465	8.319	8.122	7.873
4.25	8.735	8.651	8.514	8.326	8.086
4.30	8.912	8.836	8.709	8.530	8.298
4.35	9.089	9.022	8.904	8.733	8.511
4.40	9.266	9.208	9.099	8.937	8.723
4.45	9.443	9.394	9.293	9.141	8.936
4.50	9.620	9.580	9.488	9.344	9.149
4.55	9.797	9.766	9.683	9.548	9.361
4.60	9.974	9.952	9.878	9.752	9.574
4.65	10.151	10.138	10.072	9.955	9.786
4.70	10.328	10.324	10.267	10.159	9.999
4.75	10.505	10.509	10.462	10.363	10.211
4.80	10.682	10.695	10.657	10.566	10.424
4.85	10.859	10.881	10.852	10.770	10.636
For each additional 0.05 meter depth:					
	+0.177	+0.186	+0.195	+0.204	+0.213

TRENCH BACKFILL TABLE FOR ELLIPTICAL PIPE, METRIC

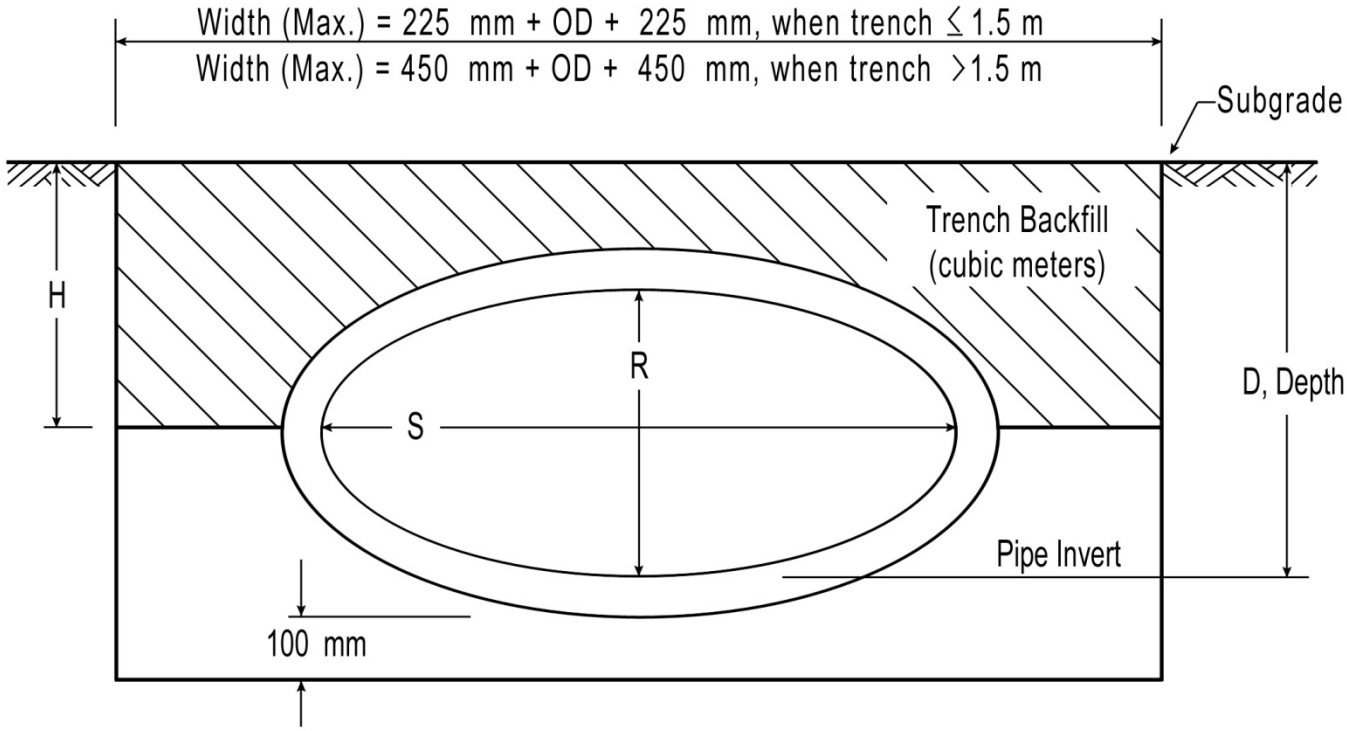

EXAMPLE

Given:	Pipe = 950 mm rise x 1500 mm span, Storm Sewer	
	Average Depth, D = 1.40m	
	Trench Length = 25.1m	
Find:	Cubic Meters of TRENCH BACKFILL	
Solution:	From Table, cubic meters/linear meter	1.690
	x Trench length	x 25.1
	TRENCH BACKFILL VOLUME	**= 42.4 m^3**

Note: If the Field Engineer measures a width of trench less than the maximum permitted, the values included herein will be of no value. The actual volume of TRENCH BACKFILL used will therefore have to be calculated using the following formula:

Cubic Meters = [(H x W) - (Pipe End Area)/2] x L

VOLUME OF TRENCH BACKFILL (CU. METERS)
PER LINEAL METER OF ELLIPTICAL STORM SEWER PIPE

Note: The calculated volumes are based on the use of standard English sized pipes that meet the tolerances of the Metric pay items.

Eq. Round Size (mm)	450 (18")	600 (24")	675 (27")	750 (30")	825 (33")	900 (36")	975 (39")	1050 (42")
Nominal Rise (mm)	350 (14")	475 (19")	550 (22")	600 (24")	675 (27")	725 (29")	800 (32")	850 (34")
Nominal Span (mm)	575 (23")	750 (30")	850 (34")	950 (38")	1050 (42")	1125 (45")	1225 (49")	1325 (53")
Wall Thickness (mm)	70	83	89	95	95	114	121	127
End Area (sq meters)	0.28	0.47	0.60	0.73	0.87	1.04	1.23	1.40
D(m) = Average Depth of Trench from Subgrade to Invert of Pipe								
0.50	0.237							
0.55	0.296							
0.60	0.355	0.258						
0.65	0.414	0.327	0.251					
0.70	0.472	0.396	0.326					
0.75	0.531	0.465	0.401	0.352				
0.80	0.590	0.534	0.475	0.432	0.348			
0.85	0.648	0.602	0.550	0.512	0.433			
0.90	0.707	0.671	0.624	0.593	0.518	0.449		
0.95	0.766	0.740	0.699	0.673	0.604	0.540	0.437	
1.00	0.824	0.809	0.773	0.753	0.689	0.631	0.534	0.463
1.05	0.883	0.878	0.848	0.833	0.775	0.722	0.631	0.565
1.10	0.942	0.947	0.923	0.914	0.860	0.813	0.728	0.668
1.15	1.000	1.016	0.997	0.994	0.945	0.904	0.824	0.770
1.20	1.059	1.084	1.072	1.074	1.031	0.995	0.921	0.873
1.25	1.118	1.153	1.146	1.155	1.116	1.086	1.018	0.975
1.30	1.177	1.222	1.221	1.235	1.201	1.690	1.606	1.555
1.35	1.880	1.901	1.884	1.890	1.841	1.808	1.731	1.685
1.40	1.966	1.997	1.986	1.998	1.954	1.927	1.855	1.815
1.45	2.052	2.093	2.088	2.106	2.066	2.045	1.979	1.945
1.50	2.139	2.190	2.190	2.213	2.179	2.164	2.104	2.075
1.55	2.225	2.286	2.293	2.321	2.292	2.283	2.228	2.205
1.60	2.311	2.383	2.395	2.429	2.405	2.401	2.352	2.335
1.65	2.397	2.479	2.497	2.537	2.518	2.520	2.476	2.465
1.70	2.483	2.575	2.599	2.645	2.631	2.638	2.601	2.595
1.75	2.570	2.672	2.701	2.752	2.744	2.757	2.725	2.725
1.80	2.656	2.768	2.803	2.860	2.856	2.876	2.849	2.855
1.85	2.742	2.864	2.905	2.968	2.969	2.994	2.974	2.985
1.90	2.828	2.961	3.007	3.076	3.082	3.113	3.098	3.115
1.95	2.914	3.057	3.109	3.183	3.195	3.231	3.222	3.245
2.00	3.000	3.153	3.211	3.291	3.308	3.350	3.346	3.375
2.05	3.087	3.250	3.313	3.399	3.421	3.468	3.471	3.505
2.10	3.173	3.346	3.415	3.507	3.534	3.587	3.595	3.635
2.15	3.259	3.442	3.517	3.615	3.647	3.706	3.719	3.765
2.20	3.345	3.539	3.619	3.722	3.759	3.824	3.844	3.895
2.25	3.431	3.635	3.722	3.830	3.872	3.943	3.968	4.025
2.30	3.518	3.732	3.824	3.938	3.985	4.061	4.092	4.155
2.35	3.604	3.828	3.926	4.046	4.098	4.180	4.217	4.285
2.40	3.690	3.924	4.028	4.154	4.211	4.298	4.341	4.415
2.45	3.776	4.021	4.130	4.261	4.324	4.417	4.465	4.545
2.50	3.862	4.117	4.232	4.369	4.437	4.536	4.589	4.675
2.55	3.949	4.213	4.334	4.477	4.549	4.654	4.714	4.805
2.60	4.035	4.310	4.436	4.585	4.662	4.773	4.838	4.935
2.65	4.121	4.406	4.538	4.692	4.775	4.891	4.962	5.065
2.70	4.207	4.502	4.640	4.800	4.888	5.010	5.087	5.195
2.75	4.293	4.599	4.742	4.908	5.001	5.129	5.211	5.325
2.80	4.380	4.695	4.844	5.016	5.114	5.247	5.335	5.455
2.85	4.466	4.791	4.946	5.124	5.227	5.366	5.459	5.586
2.90	4.552	4.888	5.048	5.231	5.339	5.484	5.584	5.716
2.95	4.638	4.984	5.151	5.339	5.452	5.603	5.708	5.846
3.00	4.724	5.080	5.253	5.447	5.565	5.721	5.832	5.976
For each additional 0.05 meter depth:								
	+0.086	+0.096	+0.102	+0.108	+0.113	+0.119	+0.124	+0.130

VOLUME OF TRENCH BACKFILL (CU. METERS)
PER LINEAL METER OF ELLIPTICAL STORM SEWER PIPE

Note: The calculated volumes are based on the use of standard English sized pipes that meet the tolerances of the Metric pay items.

Eq. Round Size (mm)	1200 (48")	1350 (54")	1500 (60")	1650 (66")	1800 (72")	1950 (78")	2100 (84")	2250 (90")
Nominal Rise (mm)	950 (38")	1075 (43")	1200 (48")	1325 (53")	1450 (58")	1575 (63")	1700 (68")	1800 (72")
Nominal Span (mm)	1500 (60")	1700 (68")	1900 (76")	2075 (83")	2275 (91")	2450 (98")	2650 (106")	2825 (113")
Wall Thickness (mm)	140	152	165	178	191	203	216	229
End Area (sq meters)	1.76	2.23	2.75	3.29	3.92	4.56	5.30	5.97
D(m) = Average Depth of Trench from Subgrade to Invert of Pipe								
1.15	0.623							
1.20	0.735							
1.25	0.848	1.019						
1.30	1.410	1.171						
1.35	1.550	1.323						
1.40	1.690	1.474	1.202					
1.45	1.831	1.626	1.365					
1.50	1.971	1.777	1.528					
1.55	2.111	1.929	1.691	1.391				
1.60	2.251	2.081	1.854	1.564				
1.65	2.391	2.232	2.017	1.737				
1.70	2.531	2.384	2.180	1.910	1.597			
1.75	2.672	2.535	2.343	2.084	1.781			
1.80	2.812	2.687	2.506	2.257	1.966			
1.85	2.952	2.839	2.669	2.430	2.151	1.808		
1.90	3.092	2.990	2.832	2.603	2.335	2.003		
1.95	3.232	3.142	2.995	2.776	2.520	2.198	1.832	
2.00	3.372	3.293	3.158	2.950	2.705	2.393	2.038	
2.05	3.513	3.445	3.321	3.123	2.889	2.587	2.244	
2.10	3.653	3.597	3.484	3.296	3.074	2.782	2.450	2.144
2.15	3.793	3.748	3.647	3.469	3.258	2.977	2.657	2.360
2.20	3.933	3.900	3.810	3.642	3.443	3.172	2.863	2.576
2.25	4.073	4.051	3.973	3.816	3.628	3.367	3.069	2.793
2.30	4.213	4.203	4.136	3.989	3.812	3.561	3.275	3.009
2.35	4.354	4.355	4.299	4.162	3.997	3.756	3.481	3.225
2.40	4.494	4.506	4.462	4.335	4.181	3.951	3.688	3.442
2.45	4.634	4.658	4.625	4.508	4.366	4.146	3.894	3.658
2.50	4.774	4.809	4.788	4.681	4.551	4.340	4.100	3.874
2.55	4.914	4.961	4.951	4.855	4.735	4.535	4.306	4.091
2.60	5.055	5.113	5.114	5.028	4.920	4.730	4.512	4.307
2.65	5.195	5.264	5.277	5.201	5.105	4.925	4.719	4.524
2.70	5.335	5.416	5.441	5.374	5.289	5.120	4.925	4.740
2.75	5.475	5.567	5.604	5.547	5.474	5.314	5.131	4.956
2.80	5.615	5.719	5.767	5.721	5.658	5.509	5.337	5.173
2.85	5.755	5.871	5.930	5.894	5.843	5.704	5.543	5.389
2.90	5.896	6.022	6.093	6.067	6.028	5.899	5.750	5.605
2.95	6.036	6.174	6.256	6.240	6.212	6.093	5.956	5.822
3.00	6.176	6.325	6.419	6.413	6.397	6.288	6.162	6.038
3.05	6.316	6.477	6.582	6.587	6.582	6.483	6.368	6.255
3.10	6.456	6.629	6.745	6.760	6.766	6.678	6.575	6.471
3.15	6.596	6.780	6.908	6.933	6.951	6.873	6.781	6.687
3.20	6.737	6.932	7.071	7.106	7.135	7.067	6.987	6.904
3.25	6.877	7.083	7.234	7.279	7.320	7.262	7.193	7.120
3.30	7.017	7.235	7.397	7.453	7.505	7.457	7.399	7.336
3.35	7.157	7.387	7.560	7.626	7.689	7.652	7.606	7.553
3.40	7.297	7.538	7.723	7.799	7.874	7.846	7.812	7.769
3.45	7.437	7.690	7.886	7.972	8.059	8.041	8.018	7.986
3.50	7.578	7.841	8.049	8.145	8.243	8.236	8.224	8.202
3.55	7.718	7.993	8.212	8.318	8.428	8.431	8.430	8.418
3.60	7.858	8.145	8.375	8.492	8.612	8.626	8.637	8.635
3.65	7.998	8.296	8.538	8.665	8.797	8.820	8.843	8.851
For each additional 0.05 meter depth:								
	+0.140	+0.152	+0.163	+0.173	+0.185	+0.195	+0.206	+0.216

VOLUME OF TRENCH BACKFILL (CU. METERS)
PER LINEAL METER OF ELLIPTICAL STORM SEWER PIPE

Note: The calculated volumes are based on the use of standard English sized pipes that meet the tolerances of the Metric pay items.

Eq. Round Size (mm)	2400 (96")	2550 (102")	2700 (108")	2850 (114")	3000 (120")	3300 (132")	3600 (144")
Nominal Rise (mm)	1925 (77")	2050 (82")	2175 (87")	2300 (92")	2425 (97")	2650 (106")	2900 (116")
Nominal Span (mm)	3025 (121")	3200 (128")	3400 (136")	3575 (143")	3775 (151")	4150 (166")	4500 (180")
Wall Thickness (mm)	241	248	254	267	279	305	330
End Area (sq meters)	6.81	7.59	8.46	9.39	10.43	12.52	14.82
D(m) = Average Depth of Trench from Subgrade to Invert of Pipe							
2.20	2.163						
2.25	2.391						
2.30	2.618						
2.35	2.846	2.418					
2.40	3.074	2.656					
2.45	3.302	2.893					
2.50	3.530	3.130	2.694				
2.55	3.757	3.368	2.942				
2.60	3.985	3.605	3.190				
2.65	4.213	3.842	3.438	2.958			
2.70	4.441	4.080	3.687	3.216			
2.75	4.669	4.317	3.935	3.475	2.973		
2.80	4.896	4.554	4.183	3.733	3.243		
2.85	5.124	4.791	4.431	3.991	3.513		
2.90	5.352	5.029	4.679	4.250	3.782		
2.95	5.580	5.266	4.927	4.508	4.052		
3.00	5.808	5.503	5.175	4.766	4.322	3.377	
3.05	6.035	5.741	5.423	5.024	4.591	3.669	
3.10	6.263	5.978	5.672	5.283	4.861	3.960	
3.15	6.491	6.215	5.920	5.541	5.131	4.251	
3.20	6.719	6.453	6.168	5.799	5.401	4.542	
3.25	6.947	6.690	6.416	6.058	5.670	4.834	
3.30	7.174	6.927	6.664	6.316	5.940	5.125	3.974
3.35	7.402	7.165	6.912	6.574	6.210	5.416	4.286
3.40	7.630	7.402	7.160	6.832	6.479	5.708	4.597
3.45	7.858	7.639	7.408	7.091	6.749	5.999	4.909
3.50	8.086	7.877	7.656	7.349	7.019	6.290	5.221
3.55	8.313	8.114	7.905	7.607	7.289	6.582	5.532
3.60	8.541	8.351	8.153	7.866	7.558	6.873	5.844
3.65	8.769	8.589	8.401	8.124	7.828	7.164	6.156
3.70	8.997	8.826	8.649	8.382	8.098	7.455	6.467
3.75	9.225	9.063	8.897	8.640	8.367	7.747	6.779
3.80	9.452	9.301	9.145	8.899	8.637	8.038	7.090
3.85	9.680	9.538	9.393	9.157	8.907	8.329	7.402
3.90	9.908	9.775	9.641	9.415	9.176	8.621	7.714
3.95	10.136	10.013	9.890	9.673	9.446	8.912	8.025
4.00	10.364	10.250	10.138	9.932	9.716	9.203	8.337
4.05	10.591	10.487	10.386	10.190	9.986	9.495	8.649
4.10	10.819	10.725	10.634	10.448	10.255	9.786	8.960
4.15	11.047	10.962	10.882	10.707	10.525	10.077	9.272
4.20	11.275	11.199	11.130	10.965	10.795	10.368	9.583
4.25	11.503	11.437	11.378	11.223	11.064	10.660	9.895
4.30	11.730	11.674	11.626	11.481	11.334	10.951	10.207
4.35	11.958	11.911	11.875	11.740	11.604	11.242	10.518
4.40	12.186	12.149	12.123	11.998	11.874	11.534	10.830
4.45	12.414	12.386	12.371	12.256	12.143	11.825	11.142
4.50	12.642	12.623	12.619	12.515	12.413	12.116	11.453
4.55	12.869	12.861	12.867	12.773	12.683	12.408	11.765
4.60	13.097	13.098	13.115	13.031	12.952	12.699	12.076
4.65	13.325	13.335	13.363	13.289	13.222	12.990	12.388
4.70	13.553	13.573	13.611	13.548	13.492	13.281	12.700
For each additional 0.05 meter depth:							
	+0.228	+0.237	+0.248	+0.258	+0.270	+0.291	+0.312

TRENCH BACKFILL FOR ARCH PIPES, METRIC

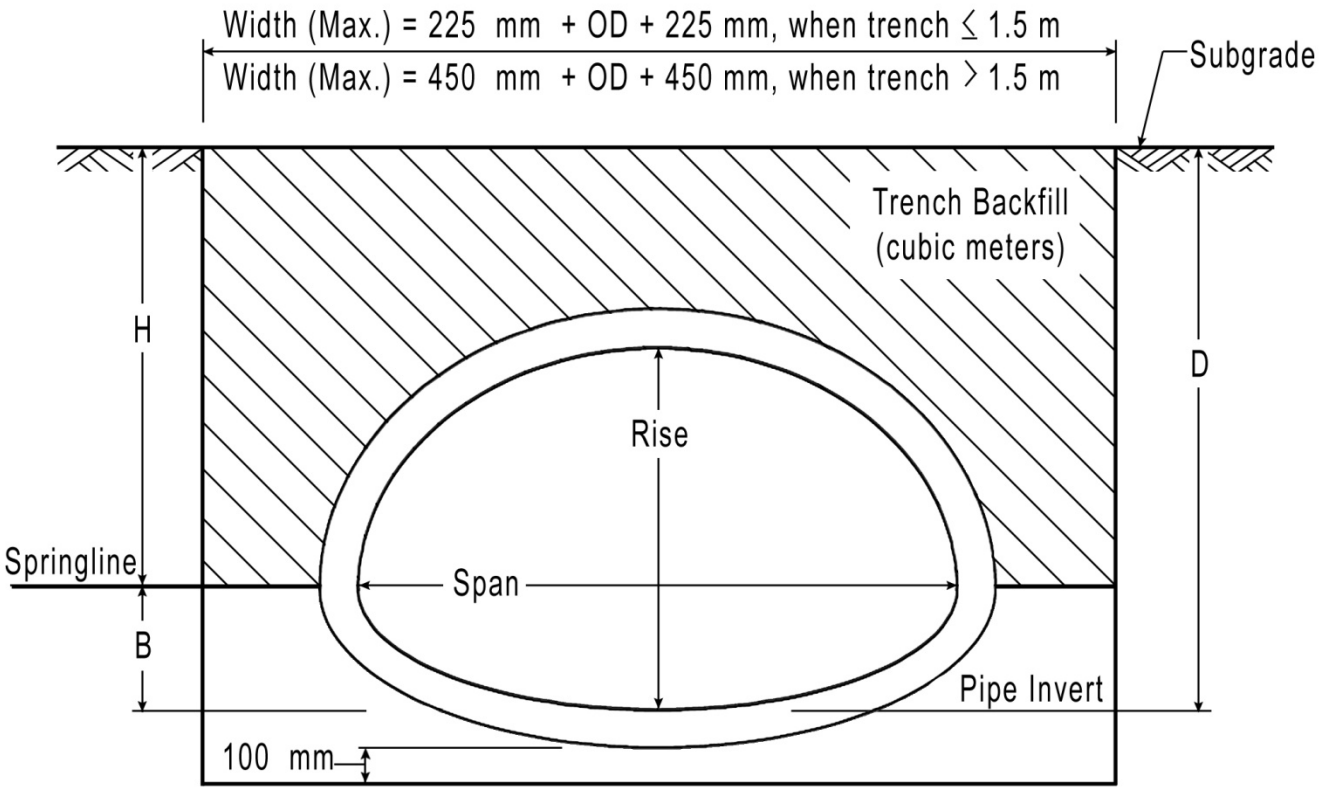

W = Width of Trench (meters)
D = Depth from Subgrade to Pipe Invert (meters)
H = Height of Trench Backfill Limits (meters) = (D – B)
B = Distance from Pipe Invert to Springline (meters) (See Table)
L = Length of Trench (meters)
A = End Area of Pipe above Springline (square meters) (See Table)

Volume (cubic meters) = [(H x W) – A] x L

This formula should be used by the designer or field engineer to determine the volume of TRENCH BACKFILL that should be paid for when backfilling storm sewer trenches utilizing reinforced concrete ARCH PIPE. Maximum trench widths permitted by Article 550.04 of the Standard Specifications are used.

Volume of Trench Backfill (cu m) Per Lineal Meter Of Reinforced Concrete Pipe Arch Storm Sewer

Equivalent Round Size (mm)		Rise		Span		Wall Thickness (mm)	End Area Above Springline (sq m)	B (m)
		(mm)	(inch)	(mm)	(inch)			
375	(15 in)	279	11.0	457	18.0	57	0.100	0.119
450	(18 in)	343	13.5	559	22.0	64	0.132	0.152
525	(21 in)	394	15.5	660	26.0	70	0.180	0.158
600	(24 in)	457	18.0	724	28.5	76	0.257	0.149
675	(27 in)	572	22.5	921	36.3	89	0.390	0.195
750	(30 in)	572	22.5	921	36.3	89	0.390	0.195
900	(36 in)	676	26.6	1111	43.8	102	0.561	0.216
1050	(42 in)	795	31.3	1299	51.1	114	0.762	0.256
1200	(48 in)	914	36.0	1486	58.5	127	0.991	0.296
1350	(54 in)	1016	40.0	1651	65.0	140	1.214	0.329
1500	(60 in)	1143	45.0	1854	73.0	152	1.518	0.372
1650	(66 in)	1372	54.0	2235	88.0	178	2.207	0.433
1800	(72 in)	1372	54.0	2235	88.0	178	2.207	0.433
2100	(84 in)	1575	62.0	2591	102.0	203	2.146	0.472
2250	(90 in)	1829	72.0	2921	115.0	216	3.684	0.604
2400	(96 in)	1962	77.3	3099	122.0	229	4.280	0.619
2700	(108 in)	2213	87.1	3505	138.0	254	5.488	0.683
3000	(120 in)	2461	96.9	3912	154.0	279	6.601	0.796
3300	(132 in)	2705	106.5	4286	168.8	254	6.777	1.155

EXAMPLE

Given: Pipe = 750 mm Round size eq., rise = 572 mm, span = 921 mm

Average Depth, D = 1.43 m

Trench Length = 25.1 m

Width, W = 2.01 m

Find: Cubic Meters of TRENCH BACKFILL

Solution: From Table: End Area, A = 0.39 sq. m

B = 0.195 m ≈ 0.20 m

Pay Height, H = D – B = 1.43 - 0.20 = 1.23 m

Volume = [(H x W) - A] x L = [(1.23)(2.01) - 0.39](25.1)

TRENCH BACKFILL VOLUME = 52.3 cu. m^3

Section F

DOCUMENTATION EXAMPLES

QUANTITY BOOK, PROGRESS AND FINAL DOCUMENTATION

The following pages of this Section contain examples for the Quantity Book and typical cross-refrence progress and final documentation.

Project Diary Inside Cover F-1
Project Diary Typical Daily Entry F-2
ICORS Diary Daily Entry.....F-3
Weekly Report of Resident F-4
Quantity Book Cover Page F-5
Quantity Book Index of Sheets.....F-6
Quantity Sheet – Pavement Patching
(left-side).....F-7
Quantity Sheet – Pavement Patching
(right side) F-8
ICORS Daily Quantities F-9
ICORS Quantity Book.....F-10
Field Book Inside Cover.....F-11
Field Book Bridge Deck Pour F-12
Field Book PCC Paving Inspection F-13
Field Book HMA Paving Inspection... .....F-14
PCC Paving Daily Record
(BC 2531) F-15,16
Bituminous Paving Daily Record
(BC 2529) F-17,18
Field Book Concrete QC/QA.....F-19
Agreement on Accuracy of Plan Quantities
(BC 981) ..... F-20 – 22
Estimating Earth Exc. IDR (via truck bed
measurements)... ..... F-23
Estimating Earth Exc. IDR (via struck capacity
in Section D) F-24
Estimating Porous Granular Embankment F-25
Estimating Reinforcing Bars and Concrete
Structures IDR F-26
Estimating Storm Sewer IDR F-27
Traffic Control & Protection Field Book F-28
Estimating Topsoil Exc. & Placement IDR F-29
Patching Electronic Spreadsheet Example F-30
Rebar Electronic Spreadsheet Example F-31
Material Allowance Affidavit (BC 49) F-32
Statement of Material Allowance (BC 131) F-33
Quantity Sheet – HMA SC C (left side).....F-34
Quantity Sheet – HMA SC C (right side).....F-35
PC Concrete Sidewalk IDR F-36
Truck Tare Weights (BC 1465) F-37
Independent Truck Weight Check
(OQCR 2367) .....F-38 – 40
Aggregate Base Course, Type A Ticket Tape ...F-41
Agricultural Ground Limestone IDR F-42
Seeding and Mulch IDR F-43
Traffic Control Surveillance Report
(BC 2240) F-44
Structure Excavation IDR F-45
Trench Backfill/ Storm Sewer IDR F-46
Concrete Structures & Reinforcement Bar
(Computation Check) F-47
Concrete Computation Summary Sheet F-48
Concrete Headwall & Rebar IDR F-49
Surface Variations Field Book F-50
Quantity Sheet – Traffic Control Prot 701401 ... F-51
Traffic Control Price Adjustment Field Book F-52
Quantity Sheet – Traf Cont Price Adjustment ... F-53
Electric Cable Schematic Field Book Entry..... F-54
Electric Cable Field Book F-55
Pipe Culvert Field Book F-56
Piling - Ordered Length Letter F-57
Piling Field Book F-58
Test Pile Driving Record (BBS 757) F-59
Production Pile Driving Data (BBS 2184) F-60
Prime Coat (Adding Machine Tape)... ..... F-61
Weekly Trainee Report (SBE 1014)..... F-62
Structural Steel, Furnish & Erect IDR F-63
Fertilizer Nutrients IDR F-64
Pavement Patching Field Book F-65
Base Course Widening IDR F-66
Slopewall IDR F-67
Supplemental Watering IDR F-68
Seedlings IDR..... F-69
Tree Removal Field Book F-70

Agreement on Accuracy of Plan Quantities
(BC 981).....F-20 – 22
Aggregate Base Course, Type A Ticket Tape ...F-41
Agricultural Ground Limestone IDR F-42
Base Course Widening IDR... .....F-66
Bituminous Paving Daily Record
(BC 2529) F-17,18
Concrete Computation Summary Sheet F-48
Concrete Headwall & Rebar IDR F-49
Concrete Structures & Reinforcement Bar
(Computation Check) F-47
Electric Cable Field Book F-55
Electric Cable Schematic Field Book Entry.....F-54
Estimating Earth Exc. IDR (via truck bed
measurements)... ..... F-23
Estimating Earth Exc. IDR (via struck capacity
in Section D) F-24
Estimating Porous Granular Embankment F-25
Estimating Reinforcing Bars and Concrete
Structures IDR F-26
Estimating Storm Sewer IDR F-27
Estimating Topsoil Exc. & Placement IDR F-29
Fertilizer Nutrients IDR F-64
Field Book Inside Cover.....F-11
Field Book Bridge Deck Pour F-12
Field Book PCC Paving Inspection F-13
Field Book HMA Paving Inspection... .....F-14
Field Book Concrete QC/QA.....F-19
ICORS Diary Daily Entry.....F-3
ICORS Daily Quantities F-9
ICORS Quantity Book.....F-10
Independent Truck Weight Check
(OQCR 2367)..... F-38 – 40
Material Allowance Affidavit (BC 49) F-32
Patching Electronic Spreadsheet Example F-30
Pavement Patching Field Book F-65
PCC Paving Daily Record
(BC 2531) F-15,16
PC Concrete Sidewalk IDR F-36
Piling - Ordered Length Letter F-57
Piling Field Book F-58
Pipe Culvert Field Book F-56
Prime Coat (Adding Machine Tape)... ..... F-61
Production Pile Driving Data (BBS 2184) F-60
Project Diary Inside Cover..... F-1
Project Diary Typical Daily Entry..... F-2
Quantity Book Cover Page F-5
Quantity Book Index of Sheets F-6
Quantity Sheet – Pavement Patching
(left-side) F-7
Quantity Sheet – Pavement Patching
(right side)..... F-8
Quantity Sheet – HMA SC C (left side) F-34
Quantity Sheet – HMA SC C (right side) F-35
Quantity Sheet – Traf Cont Price Adjustment ... F-53
Quantity Sheet – Traffic Control Prot 701401 ... F-51
Rebar Electronic Spreadsheet Example F-31
Seeding and Mulch IDR F-43
Seedlings IDR..... F-69
Slopewall IDR F-67
Statement of Material Allowance (BC 131)..... F-33
Structural Steel, Furnish & Erect IDR F-63
Structure Excavation IDR F-45
Supplemental Watering IDR F-68
Surface Variations Field Book F-50
Test Pile Driving Record (BBS 757) F-59
Traffic Control & Protection Field Book F-28
Traffic Control Price Adjustment Field Book F-52
Traffic Control Surveillance Report
(BC 2240)..... F-44
Tree Removal Field Book F-70
Trench Backfill/ Storm Sewer IDR F-46
Truck Tare Weights (BC 1465) F-37
Weekly Report of Resident..... F-4
Weekly Trainee Report (SBE 1014)..... F-62

County	CHAMPAIGN
Section	(10-33HB)BDR
Route	FAI 57
District	05
Contract Number	70924
Job Number	C-95-031-11
Project Number	
Year	2012

IF FOUND RETURN TO:

Illinois Dept. of Transportation

13473 IL Hwy 133

P.O. Box 610

Paris IL 61944-0610

Resident Name	Sheldon Cooper
Project Phone	(217) 251-XXXX
Contractor's Name	Murphy Construction
Contractors Address	604 E Green St
Contractor City	Champaign
Contractor Phone	(217) 891-XXXX

All entries made by Resident unless otherwise noted: Sheldon Cooper SC

Resident Signature

Leonard Hoftstadter LH

Raj Koothrappali R.K.

Howard Wolowitz HW

Diary Entry Example

Wed. MAY 30

Hours Worked: 11.0

Weather: Cloudy, Warm

Temp: 75°f

Controlling Item: Earth Ex

Working Day Charged: 1.0

Kilian: Worked from 12p to 7p placing Bit. on shldr at 17th St. Sawcutting crew worked at Royal Heights Road.

Baxmeyer: Worked on Earth Ex and pipe culverts

Craig: Finished setting forms on floor slab of box culvert

Kilian supplied completed Engrs Field Office TY A on this date, begin payment. J. Smith (SFE) visited job site today. Union Pacific RR provided 2 RR flaggers for 11 hours.

(Traffic Control)

T.C. okay at 7AM and 5PM

Baxmeyer: 6 OP - 5 LAB – 1 TMSTR

Kilian: 7 LAB – 4 OP – 1 TMSTR

Craig (DBE): 2 CAR, 1 LAB

Contract:	70924	**State of Illinois**	**Resident:**	Jason R. Smith
County:	CHAMPAIGN	**Department of Transportation**	**Supervisor:**	Mike Carnahan
Section:	(10-33HB)BDR	**ICORS System**	**Field Office Phone:**	(217)251-4749
		Diary of Resident Engineer	**Job Number:**	C-95-031-11
Route:	FAI 57		**Project:**	N/A
District:	05			

Date Thursday, July 12, 2012 **Weekly Report Number** 7

Controlling Item Microsilica Overlay

Persons Working 6.00 **Hours Worked** 8.00

Weather 7am 61 Cloudy 12p 85 Cloudy 3p 88 Cloudy

Working Days Charged 0.00 **Workable Days** 1.00

Weekly Report Paragraph Oneil removed protective shield and began digging out for Class D patches on the bridge ends

Additional Paragraphs Traffic Control inspected by Jason Smith at 7am and no problems found

Contacted Tom Proctor to let him know asphalt could not be vibratory rolled near the bridge deck until the 7 day cure time had lapsed. The patching is not scheduled for Tuesday.

Illinois Department of Transportation

Weekly Report of Resident

County: CHAMPAIGN
Section: (10-33HB)BDR

Report No: 7 Week Ending: 7/14/2012 % Complete: 46.00
Contract Price: $409,252.83 Estimated Completion Date: 8/3/2012
Contractor: Oneil Brothers, a Division of MACC of ILL, INC
Contract Completion Date: 08/03/2012 Contract Working Days: 0.00
Time Limit Extended To: Average Number of Persons Working: 7

Route: FAI 57
District: 05
Contract No. 70924
Job No. C-95-031-11
Project: N/A

Execution 02/29/2012 Start 05/29/2012 Reports Suspended: Reports Resumed Significant Completion: 8/3/2012
Resident Name: Jason R. Smith

Day	Date	Hours Worked	Controlling Item	Working Days Charged	Workable Days	Provide summary of Contractor's and Subcontractor's operations each day. Compare performance with Progress Schedule. A reason must be provided when less than a full working day is charged.
Sun	7/8/2012	0.00	Microsilica Overlay	0.00	0.00	No work. No workable day due to rain on the jobsite.
Mon	7/9/2012	8.00	Microsilica Overlay	0.00	1.00	Oneil wetting the deck and covering in preparation of the microsilica overlay scheduled for the following day.
Tue	7/10/2012	10.00	Microsilica Overlay	0.00	1.00	Oneil placed the microsilica overlay on this day
Wed	7/11/2012	8.00	Microsilica Overlay	0.00	1.00	Oneil removed protective shield
Thu	7/12/2012	8.00	Microsilica Overlay	0.00	1.00	Oneil removed protective shield and began digging out for Class D patches on the bridge ends
Fri	7/13/2012	8.00	Microsilica Overlay	0.00	1.00	Oneil removed protective shield and began digging out for Class D patches on the bridge ends. Also placed the polymer concrete over the bridge joints.
Sat	7/14/2012	0.00	Microsilica Overlay	0.00	1.00	no work

Total This Week:	0.00	6.00
Previous Total:	0.00	38.00
Total To Date:	0.00	44.00

Will Contractor Complete project on time at present rate of progress? Yes
If no - Why?
Have you discussed rate of progress with Contractor this week?: Yes
If no - Why?

Orig: Regional Engineer
c.c : Contractor
Bur. Construction
Project File

Resident (217) 251-4749

NOTE: If the Contractor disagrees with the working day charges, detailed reasons must be expressed in writing to the Regional Engineer within 7 days after receipt of report.

Printed 8/17/2012 10:19:46 AM

BC 239 (Rev. 02/06/09)

IDOT QUANTITY BOOK

County	CHAMPAIGN		
Section	(10-33HB)BDR		
Route	FAI 57		
District	05		
Contract Number	70924		
Job Number	C-95-031-11		
Project Number			
Resident's Name	Sheldon Cooper		
Field Office Phone	(217) 251-XXXX		
Supervisor Name	Amy Farrah Fowler		
Contractor Name	Murphy Construction		
Contractor Address	604 E Green St		
	Champaign	IL	61820
Contractor Phone	(217) 891-XXXX		

If found, please return this to the Resident Engineer or forward it to the District Office address below

Illinois Dept. of Transportation

13473 IL Hwy 133

P.O. Box 610

Paris IL 61944-0610

IDOT QUANTITY BOOK

INDEX OF SHEETS

COUNTY	177	**DISTRICT**	02
SECTION	20RS-1 & 20BR		
ROUTE	FAP 5		
CONTRACT	84776		
JOB NO	C-92-072-12		
PROJECT	STPF-BRF-0005/050/000		

FASID	ITEM NO	PAGE	DESCRIPTION
Q10C01	20300100	1	CHANNEL EXCAV
	28100107	2	STONE RIPRAP CL A4
	28200200	3	FILTER FAB
	50100100	4	REM EXIST STRUCT
	50200100	5	STRUCTURE EXCAVATION
	50300100	6	FLOOR DRAINS
	50300208	7	CONC ENCASE
	50300225	8	CONC STRUCT
	50300255	9	CONC SUP-STR
	50300260	10	BR DECK GROOVING
	50300300	11	PROTECTIVE COAT
	50800205	12	REINF BARS, EPOXY CTD
	50800515	13	BAR SPLICERS
	51200700	14	FUR CONC PILES
	51202305	15	DRIVE CONC PILES
	51204200	16	TEST PILE CONCRETE
	51205200	17	TEMP SHT PILING
	51500100	18	NAME PLATES
	66700205	19	PERM SURV MKRS T1
	70106500	20	TEMP BR TRAF SIGNALS
3AAL01	X0322352	21	SEEDING MOBILIZATION
	X2500200	22	TEMP SEEDING
	40600645	23	LEV BIN MM, N90
	40603090	24	HMA BINDER CSE, IL-19.0, N90
	40603345	25	HMA SURFACE CSE, MIX “D”, N90
	Z0013798	26	CONSTRUCTION LAYOUT
	Z0028415	27	GEOTECHNICAL REINF
	FRC00100	28	CONSTRUCTING TEST STRIP
	X9200400	29	TRAF CONT & PROT

Illinois Department of Transportation

Quantity Sheet

County 177

Section 20RS-S & 20BR

Route FAP 5

District 02
Contract No. 84776
Job No. C-92-072-12

Project STPF-BRF-0005/050/000

Page 280
Item 44200156
PAVT PATCH T2 13
Fund 33DC01
Plan Quantity 327.800
Unit Measure SQ YD
Contract Unit Price 64.0000

Authorizations

Number	Date App'vd	Add	Deduct	Total
3	7/27/12	35.4		363.2

Cnty	Const	Sfty	Quantity
177	I000	2A	327.800

Date	Station to Station Location or Description	Quantities Placed			Evidence of Material Inspection	Progress Document Source
		This Date	To Date	Pay Est		
7/12/12	STA 69+34 → 84+21 NB	83.2	83.2		Plant Rpt.	FB #3, p. 12
7/13/12	STA 96+13 → 130+01 NB	121.4	204.6		& Tickets	FB #3, p. 12
7/16/12	STA 125+16 → 74+95 SB	95.4	300.0		& Test	" , p. 16
7/17/12	STA 74+51 → 62+49 SB	63.2	363.2	#3/327.8		" , p. 24
				#4/363.2		
			FINAL			

Source of documentation
for final quantity: FB #3, pp. 8-24 for Qtys & Depths

BC 625 (Rev. 4/98)

For all tonnage items
weighed on platform scales:
Scales checked by
Dept. Of Agriculture
Date on decal_____
Identification No._____
Scale Location _____
_____

Inspection Reports

Date	Mistic Report No. or Source or Manufacturer	Amount	Total to Date	Transferred to Other Code or Remarks
7/12/12	MI-305, Daily Plant Output	65.4 tons	65.4	
7/13/12		90.2 tons	155.6	
7/16/12		70.4 tons	226.0	
7/17/12		47.1 tons	273.1	

Contract:	76308	**State of Illinois**	**Resident:**	Brett Schwalb
County:	MADISON	**Department of Transportation**	**Supervisor:**	Ted Nemsky
Section:	60-(4,5)RS-2	**ICORS System**	**Field Office Phone:**	(618)288-5071
		Daily Quantities	**Job Number:**	C-98-123-10
Route:	FAI 270		**Project:**	N/A
District:	08			

DQ Number: 41 **Date:** 09/16/2011 **Contractor:** Keeley & Sons, Inc

Pay Item Key: 44200204-Q050J01-119I0002A-A PAVT PATCH T3 17

Qty Inspected: 24.40 SQ YD **Posted** ☑ **Paid on Estimate Nbr:** 2 **Estimate or Final:** Final

Evidence of Inspection: Plant Report & Tickets and Test in File

Location: I-270 WB Driving lane Station 837+55 to 816+50

Source of Progress Documentation: Field book # 3, page 2

Contract:	76308	**Resident:**	Brett Schwalb
County:	MADISON	**Supervisor:**	Ted Nemsky
Section:	60-(4,5)RS-2	**Field Office Phone:**	(618)288-5071
		Job Number:	- - N-/A
Route:	FAI 270	**Project:**	N/A

State of Illinois
Department of Transportation
ICORS System
Quantity Book

District: 08 PAVT PATCH T3 17

Qty Book Page: 44200204-Q050J01-A PAVT PATCH T3 17

Pay Item Nbr: 44200204 **FASID** Q050J01 **Subjob** A

Units SQ YD **UnitPrice** $81.6000

Quantity Awarded 67.000 **Adjusted Total Qty:** 83.330

Source Of Final Documentation: FLD BK #3 PG24

Finaled Yes

Authorizations:

Auth Number	Auth Letter	CCS Code	Date Approved	Added Qty	Deducted Qty
4		119I0002A	11/14/2011	16.330	0.000

Quantities:

CCS Code	DQ Nbr	Date	Qty Inspected	To Date	Evidence of Inspection	Source of Progress Documentation:	Estimate #
119I0002A	41	09/16/2011	24.400	24.400	Plant Report & Tickets and Test in File	Fld bk # 3 pg 2	2
Location: I-270 WB Driving lane Sta 837+55 to 816+50							
Estimate or Final: Final							
119I0002A	53	09/18/2011	42.930	67.330	Plant Report & Tickets & Test in File	fld bk # 3 pg 3	2
Location: I-270 WB sta 815+95 to 792+75							
Estimate or Final: Final							
119I0002A	157	10/08/2011	16.000	83.330	Plant Report & Tickets & Test in File	FLD BK # 3 pg 4	3
Location: I-270 WB DL PATCH # 34 A							
Estimate or Final: Final							

FIELD BOOK # 4 - BRIDGE

IF FOUND PLEASE RETURN TO:

REGIONAL ENGINEER

Name ILLINOIS DEPT. OF TRANSPORTATION

DISTRICT 4

Address 401 MAIN STREET

PEORIA, IL 61202-1111

Phone *(OPTIONAL)*

Knox
5-5HB-2
FA 206
4
12345
C-94-789-12

This book is published on a fine 50% cotton-content ledger paper, specially treated for maximum archival service, and protected by a water resistant surface sizing.

Projects

TABLE OF CONTENTS

S. ABUT PILE DATA	1
PIER PILE DATE	2-3
N. ABUT PILE DATA	4
	5
TEST PILE CUT-OFF GRADES	6-7
FILLET CALCULATIONS	8-11
DECK DEPTH CHECKS	12-15
BRIDGE APPR. MEAS. & CALCS	16
BRIDGE APPR. SHLDR MEAS. & CALCS	17-18

DATE: 6/5/12 BRIDGE BUILDERS CO.

WEATHER: P. CLOUDY & WARM

AIR TEMP - 7:00 AM: 60°
NOON : 70°
3:00 PM: 75°

POUR START TIME: 7:00 AM

POUR END TIME: 2:00 PM

CURING COVER COMPLETE: 4:00 PM

BRIDGE SKEW: 15°

FINISHING MACHINE: BIDWELL

FINISHING MACHINE ORIENTATION: 90°

DRY RUN COMPLETED: 6/4/12

INSPECTORS: EAL, CR

COMMENTS: FINISHING MACHINE CHECKED AT FILLET

LOCATION	REBAR DEPTH	CONC. DEPTH
E. ABUT.	2 1/4"	8"
1/4 SPAN 1	2 3/8"	8 1/8"
MID-SPAN 1	2 1/4"	8"
3/4 SPAN 1	2 1/4"	8"
PIER 1	2 1/4"	8"
1/4 SPAN 2	2 3/8"	8 1/8"
MID-SPAN 2	2 1/4"	8 1/8"
3/4 SPAN 2	2 1/4"	8"
W. ABUT	2 1/4"	8"

PLAN DEPTH OF REBAR: 2 1/4"
PLAN DECK THICKNESS: 8"

42100200 CONT REINF PCC PAVT 9

DATE: 6/5/12 RIVER BLUFF PAVING

WEATHER: CLOUDY INSPECTORS:

68° @ 7:30 AM ZOE HEINZ

75° @ NOON TOM DUNCAN

72° @ 4:30 PM

LOCATION: WB STA 360+00 TO 383+22

LENGTH = 2322' WIDTH = 24'

EQUIPMENT:

*SKI OPERATED CMI SLIPFORM SPREADER

*SKI OPERATED CMI SLIPFORM PAVER

*STRING-GUIDED CMI TINING MACHINE W/ ASTROTURF DRAG

*STRING-GUIDED CMI MEMBRANE SPRAYER

TRUCKS: ALL AGITATING

AVG. HAUL TIME = 20MIN.

SEE TICKETS FOR REV. COUNT

15 MIN BREAKDOWN @ STA 376+00

REINFORCING:

*BAR LAP DETAIL #2 (STD 2225)

*KEYWAY & BARS

*DEPTH: 3 1/2 ±1/2"

Meas. By: ZH, JD 6/5/12

Calc. By: ZH 6/5/12

Ckd. By: JD 6/5/12

* Note: Record only on 1st day.

STATION	AIR (%)	SLUMP	BEAMS
360+00	5.0	1"	
362+50	5.2		
365+00	5.4		P-1-A
367+50	5.5	1 1/4"	P-1-B
370+00	5.2		
372+50	5.2		
375+00	4.9	1 1/2"	
377+50	5.3		
380+00	5.6		
382+50	5.5		

AREA = 2322' X 24' / 9 = 6192 SY

REQ'D VOLUME = $6192 \times \frac{9}{12} \times \frac{1}{27}$ = 1548 CY

DELIVERED (FROM TICKETS) = 1672 CY

YIELD = $\frac{1672}{1548} \times 100$ = 108%

TYPE 3 MEMBRANE CURING - ILL OK STAMP

REQ'D = $\frac{L \times W \times 2 \text{ APPL}}{250 \text{ SF/GAL}} = \frac{2322'(25.5')\ 2}{250 \text{ GAL/SY}}$ = 474 GAL

(NOTE: WIDTH = 24' + 9/12 + 9/12 = 25.5')

USED 9 BARRELS @ 55 GAL/BAR = 495 GAL √ OK

40603085 HMA BINDER CSE IL-19.0 N70

DATE: 6/20/12 HEINZ PAVING

WEATHER: SUNNY INSPECTORS:

65° @ 6:30 AM EMILY DUNCAN

90° @ 2:30 PM MATT PATEL

LOCATION: WB STA 37+20 TO 115+80

LENGTH = 7860'

MAT WIDTH = 12'

MAT THICKNESS = 1.5 "

EQUIPMENT:

PAVER: BARBER-GREENE SA 131

VIB ROLLER: DYNAPAC 42A; TACH=2400 VPM

PNEUMATIC ROLLER: INGRAM

FINISH ROLLER: GALLION 266B; STATIC MODE

MAX SPEED = 2400 VPM = 240 FT/MIN

VIB ROLLER 10 IMPACTS/FT

ROLLING PATTERN:

4 PASSES REQ'D OVER EACH POINT

9 PASSES FOR FULL MAT WIDTH

$$\text{MAX PAVER SPEED} = \frac{240\ \text{FT/MIN}}{9\ \text{PASSES}} \times 0.9 = 24\ \text{FT/MIN}$$

Meas. By: ED, MP 6/28/12

Calc. By: ED 6/28/12

Chkd. By: MP 6/28/12

TEMP	IN TRUCK	BEHIND PAVER
8:00 AM	295°	280°
10:00 AM	290°	270°
12 NOON	305°	285°
2:00 PM	310°	290°

YIELD CHECKS:

1. THEORETICAL TRUCK DUMPING DISTANCE, D

$$D = \frac{12\ \text{TONS/TRUCK}(2000\ \text{LBS/TON})(9\ \text{SF/SY})}{12'(112\ \text{LBS/FT-IN})\ (1.5'')} = 107\ \text{FT/TRUCK}$$

2. THEORETICAL TONS PER STATION, T_S

$$T_S = \frac{(12' \times 100')(112\ \text{LBS/FT-IN})(1.5'')}{(9\ \text{SF/SY})(2000\ \text{LBS/TON})} = 11.2\ \text{TONS}$$

3. DAILY TOTAL YIELD CHECK:

$$\text{THEO.} = \frac{(12' \times 7860')(112\ \text{LBS/FT-IN})(1.5'')}{(9\ \text{SF/SY})(2000\ \text{LBS/TON})} = 880.3\ \text{TONS}$$

TONS DELIVERED = 897.9 (SEE TICKET FILE)

$$\text{YIELD} = \frac{\text{DELIVERED}}{\text{THEORETICAL}} = \frac{897.9}{880.3} = 102\%$$

MAT'L INSP: PLANT REPORT, TICKETS & TEST

70300100 SHORT TERM PAVT MARKING

WB STA 37+20 TO 115+50

195 SKIP-DASHES x 4' EACH = 780'

Illinois Department of Transportation

PCC Paving Daily Record

Date September 7, 2012 Contract No. 90632 Mix Design No. 85PCC6427

Pay Item No. and Description 42000400 PCC PAVEMENT 9"

Resident Matt Young Contractor A1 Construction Company

Inspectors	Visitors
Amber Weiser	Greg Idleman - FE
Steve Blakeney	
Todd Richardson	

Weather	Time	Temp.	Conditions
	7:00 AM	70	Sunny, Dry
	Noon	81	Sunny, Dry
	3:00 PM	85	Sunny, Dry

Start Sta.	End Sta.	Distance		Width				Sq. Yds.
1508+00	1516+00	800.0 ft	x	24 ft	x	1/9	=	2133.3
			x		x	1/9	=	
			x		x	1/9	=	
			x		x	1/9	=	
			x		x	1/9	=	
			x		x	1/9	=	

Contractor's Paving Equipment		Trucks	
Spreader		Non-agitating	☐ Yes ☐ No
Paver	Gomaco GP – 2500	Agitating	☒ Yes ☐ No
Tining Maching	Gomaco T/C - 600	Average Haul Time	20 Min
Curing Sprayer			

Rebar Lap Detail _____ Rebar Depth _____

Tie Bar Depth _____

Daily Yield				
Required Volume	$\frac{2133.3 \text{ (Total sq. yds.)} \times .75 \text{ (Thickness in feet)}}{3}$	=	533.3	Cu. Yds.
Used Volume	61 No. of batches or truck (x) 9 cu. yds/batch or truck	=	549.0	Cu. Yds.
Surplus	$\left(\frac{549 \text{ (Used)} - 533.3 \text{ (Req'd.)}}{533.3 \text{ (Req'd.)}}\right)$ (x) 100	=	2.94	% Surplus

Membrane Curing					
Type	Type II	Inspection	LA - 15		
Required Gallons	$\frac{800 \text{ (L)} \times 24 \text{ (W)} \times 2 \text{ (Applic.)}}{250 \text{ Sq. ft./gal.}}$		=	153.6	Gals.
Used Gallons	3 Barrels (x) 55 Gals./Barrel		=	165.0	Gals.

BC 2531 (9/01)

Tests											
Station	% Air	Slump	Beams/ Cylinders	Conc. Temp.	Air Temp.	Station	% Air	Slump	Beams/ Cylinders	Conc. Temp.	Air Temp.
1508+00	06.50	2 ¾"	6	76	70						
1509+00	05.20	2 ½"	- - - - - -	78	75						
1509+85	05.30	- - - - -	- - - - - -	78	77						
1510+70	05.70	3"	- - - - - -	80	79						
1511+55	05.90	2 ¾"	- - - - - -	80	80						
1512+40	06.10	3"	4	83	80						
1513+25	05.90	- - - - -	- - - - - -	83	81						
1514+15	05.90	3"	- - - - - -	84	85						
1515+50	06.00	2 ½"	- - - - - -	84	88						

Remarks

Formulas for the yield check

station – station = length

(length x width x depth) / 27 = cubic yard

Calculations / Measurements / Misc.

Yield Checks

1) From Sta. 1508+00 - 1510+00 — 135.0
Actual = 135.0 cuyd — 133.3 X 100 = 101.3%
Theo.= 133.3 cuyd

2) From Sta. 1508+00 – 1512+00 — 270.0
Actual = 270.0 cuyd — 266.7 X 100 = 101.2%
Theo.= 266.7 cuyd

3) From Sta. 1508+00 to 1514+00 — 423.0
Actual = 423.0 cuyd — 400.0 X 100 = 105.8%
Theo.= 400.00 cuyd

4) From Sta. 1508+00 to 1516+00 — 549.0
Actual = 549.0 cuyd — 533.3 X 100 = 102.9%
Theo.= 533.3 cuyd

Depth Checks

@1508+25
9" – EOP
9 ¼ " – Lane Line
9 ½ " – EOP(North)

@1510+75
9 1/8 " – EOP
9" – Lane Line
9 3/8" – EOP (North)

@1513+25
9" – EOP
9 3/8 " – Lane Line
9 ½ " – EOP (North)

@1515+75
9 ¼ " – EOP
9" – Lane Line
9 ¼" – EOP (North)

Measured by: AMW — Date: 09/07/12
Calculated by: AMW — Date: 09/07/12
Checked by: DEM — Date: **09/10/12**

BC 2531 (9/01)

Illinois Department of Transportation

Bituminous Paving Daily Record

Date June 20, 2012 Contract Number 70812 Mix Design No. 86 BIT 1536

Payment Item No. & Description 40603360 Hot-Mix Asphalt Surface, Mix E, N50

Resident John Preston Contractor Al Construction Company

Inspectors
John Dough
Robert Fell

Visitors
Bill Smith, F.E.

Weather	Time	Temp.	Conditions
	6:30AM	65° F	Sunny
	2:30PM	90° F	Sunny

Start Sta.	End Sta.	Mat Width	Mat Thick
WB 37+20	115+80	12 ft.	1.5 inch

Tons Placed Today	920.6 tons
Theo. Tons Today	901.2 tons
+/- Tons Today	+19.4 tons
Daily Yield (%)	102%
Cumulative Yield (%)	

Contractor's Paving Equipment					
Paver	Barber-Greene SA – 131	Reed Tach			
Mat'l Transfer Device	RoadTech Shuttlebuggy 2500				
Breakdown Roller	Dynapac CC 42A	Reed Tach	2400VPM	Amplitude	
Vibratory Roller		Reed Tach		Amplitude	
Pneumatic Roller	Ingram				
Finish Roller	Gallion V05 2-66 B, Static Mode				

Max Vib. Roller Speed $\frac{2400 \text{ VPM}}{10 \text{ impacts/foot}}$ = 240 ft./min

Max. Paver Speed $\frac{240 \text{ ft/min}}{9 \text{ passes}}$ x .9 = 24 ft/min

Time of Temp. & Speed	8:00 AM	10:00 AM	12 Noon	2:00 PM	
Temp. in Truck	295°	290°	305°	310°	
Temp. Behind Paver	280°	270°	285°	290°	
Paver Speed	23 ft/min	20 ft/min	22 ft/min	23 ft/min	

Theo. Truck Dumping Distance $\frac{(2000 \text{ lb/ton})(9 \text{ sf/sy})(12 \text{ ton/truck})}{(114.7 \text{ lb/in/sy})(1.5 \text{ in})(12 \text{ ft})}$ = 104.6 ft/truck

Rolling Pattern	Daily Total Yield Check (addt'l checks on reverse side)
4 Passes Required over each point therefore 9 Passes for Full Mat Width	Theo: $\frac{(12 \text{ ft} \times 7860 \text{ ft})(2.45 \times 62.4 \times .75)(1.5 \text{ in})}{(9 \text{ sf/sy})(2000 \text{ lb/ton})}$ = 901.2 tons required Delivered & placed: 920.6 tons Yield = $\frac{920.6}{901.2} \times 100$ = 102%

BC 2529 (Rev. 6/05)

Total Running Yield Checks											
Starting Station:											
Time	Total Tons Place	Check Station	Length Placed (1)	Theo. Tons (2)	Yield % (3)	Time	Total Tons Placed	Check Station	Length Placed (1)	Theo. Tons (2)	Yield % (3)
10:00 AM	303.0	63+00	2580 ft.	295.8	102.4%						
12 Noon	608.7	89+20	5200 ft.	596.2	102.1%						
1:00 PM	766.8	102+70	6550 ft.	751.0	102.1%						

(1) Length Placed = Starting Station – Check Station
(2) Theo. Tons = (Length x Mat Width x Lbs./Sq. Yd. X Mat Thickness) + (9 x 2000)
(3) Yield % = (Total Tons Placed ÷ Theo. Tons) x 100

Surface Variations			
Tested by: RS	Station/Location	Station/Location	Station/Location
Check one below:			
☒ None found today			
☐ Found variations & finish roller was able to correct variations			
☐ Found variations that require corrective action or deduction.			

Short Term Pavt. Mkg. (Item No. 70300100 **)**

STA. 37+20 to 115+50
Required: 4 ft. every 40 ft.
→Counted 195 skip dashes
at 4 ft. each = 780 ft.

Remarks

Calculations / Measurements / Misc.

Measured by: JD, RJ Date: 6/20/12
Calculated by: JD Date: 6/22/12
Checked by: RJ Date: 6/22/12

BC 2529 (Rev. 6/05)

PAVEMENT PATCHING
MIX DESIGN NO 71PCC0108
GREENE READY MIX - CHICAGO, IL

DATE: 8/20/12
WEATHER: SUNNY
77° @ 8:00 AM
81° @ 10:00 AM

TICKET NO·	BATCH TIME	ARRIVE TIME	DEPART TIME	REVS INITIAL /FINAL	BATCH YD^3	QC/QA AIR %	QC/QA SLUMP INCHES	QC/QA CONC TEMP	QC/QA CYLINDER SERIES	STA
83695	7:45 AM	8:05 AM	8:30 AM	110/170		3·8/3·5	2·1/2·3	NONE TAKEN	NONE TAKEN	37+05
	AIR ENTRAINMAENT ADDED - 8 OZ					4·5/4·7	2·8/3·2	74/74	"	
83700	8:10 AM	8:30 AM	8:45 AM	120/137		5·0/4·9	2·6/2·8	NONE TAKEN	"	37+05
83704	8:30 AM	8:50 AM	9:10 AM	117/140		NONE TAKEN	NONE TAKEN	"	"	43+50
83707	9:15 AM	9:37 AM	10:05 AM	114/159		NONE TAKEN	NONE TAKEN	"	"	53+60
83711	9:55 AM	10:15 AM	10:45 AM	119/149		5·2/5·4	2·8/3·2	80/80	P1-A / P1-C P1-B / P1-D	68+10

INSPECTORS:
ANNE RUIZ
STEPHEN WRIGHT

Illinois Department of Transportation

County

Section

Route

District
Contract No.
Job No.

Project

JOB STAMP

Agreement on Accuracy of Plan Quantities

Quantity	Unit	Pay Item	Code Number
	Acre	Tree Removal Acres	20100500
34,960*	Cu Yd	Earth Excavation	20200100
	Cu Yd	Channel Excav	20300100
	Cu Yd	Rock Excav Channel	20300200
	Cu Yd	Furnished Excavation	20400800
	Cu Yd	Gran Embank Spec	20600200
	Cu Yd	Trench Backfill	20800150
	Sq Yd	Compost Furnish & Place	211018
	Cu Yd	Topsoil Excavation & Place	21101505
	Acre	Mowing	25000750
11.8	Acre	Seeding CL 2	25000 **200**
	Acre	Mulch Method	25100
	Sq Yd	Erosion Control Blanket	25100630
	Sq Yd	Processing Modified Soil	3020
	Cu Yd	Sub Gran Mat A	31100200
	Sq Yd	Sub Gran Mat A	31100
	Cu Yd	Sub Gran Mat B	31101100
	Sq Yd	Sub Gran Mat B	31101
	Cu Yd	Sub Gran Mat C	31102000
	Sq Yd	Sub Gran Mat C	31102
	Sq Yd	Stab Sub-Base 4	31200100
	Cu Yd	Agg Base Cse A	35100200
	Sq Yd	Agg Base Cse A	3510
	Cu Yd	Agg Base Cse B	35101500
	Sq Yd	Agg Base Cse B	3510
	Sq Yd	Proc Soil-Cem BC	35200
	Sq Yd	Hes PCC Bse Cse	3530
	Sq Yd	PCC Bse Cse	35300
	Sq Yd	PCC Bse Cse 16 ½" – 10 ½"	35300800
	Sq Yd	PCC Base Cse W	35400
	Sq Yd	Hes PCC Base Cse W	3540
	Sq Yd	HMA Base Cse	3550
2,464	Sq Yd	HMA BC Wid 10	35600 **716**
	Sq Yd	HMA BC Wid 8	35600708
	Sq Yd	Base Cse Wid	35650
	Sq Yd	Preparation of Base	35800100
	Cu Yd	Agg Surf Cse A	40200200
	Sq Yd	Agg Surf Cse	40200
	Sq Yd	HMA Pavt FD	4070
	Sq Yd	PCC Pvt	42000
	Sq Yd	Hes PCC Pvt	4200
	Sq Yd	Br Appr Pavt	42001165
	Sq Yd	Pavement Fabric	42001200
	Sq Yd	Protective Coat (pavement)	42001300

	Sq Yd	Cont Reinf PCC Pvt	42100
	Sq Yd	C R Hes PCC Pvt	42100
	Sq Yd	Pavt Reinforcement	42100
	Sq Yd	Pavement Removal	44000100
	Sq Yd	Driveway Pavement Removal	44000200
	Cu Yd	Aggregate Shlds A	48100200
	Sq Yd	Aggregate Shlds A	4810
	Sq Yd	HMA Shoulders	4820
	Sq Yd	PC Concrete Shoulder	48300
	Cu Yd	Structure Excavation	50200100
	Cu Yd	Class MS Conc	50300220
	Cu Yd	Conc Sup-Str	50300255
	Cu Yd	Seal Coat Conc	50300265
	Cu Yd	Concrete Handrail	50300275
	Cu Yd	Concrete Encasement	50300280
	Sq Yd	Protective Coat (structures)	50300300
	Sq Ft	Prec Conc Br Slab	50400105
	Sq Ft	PP Conc Dk Bm DP (11", 17", 21", 27", 33")	50400
	Lin Ft	F & E P P Con I-BM (36", 42", 48", 54")	5040
	Pound	Reinforcement Bars	50800105
	Pound	Reinf Bars, Epoxy CTD	50800205
	Sq Yd	Slope Wall	51100
	Cu Yd	Conc Box Cul	54003000
	Sq Ft	Membrane Waterproof	58000100

(and the following items, as permitted by the Standard Specifications or contract provisions):

~~383.5~~	~~Cu Yd~~	~~Conc Struct~~	~~50300225~~
		* Undercut quantity of 5,631 Cu Yd shown on plans will be adjusted for actual measurements.	PJ 5-21-12

We hereby agree that when the project is constructed essentially to the lines, grades and dimensions shown on the plans, no further measurement will be required for the above items and payment will be made for the quantities shown in the contract except that if errors are discovered after work has been started, appropriate adjustments will be made.

When the plans have been altered or when disagreement exists between the Contractor and the Engineer as to the accuracy of the plan quantities, either party shall, before any work is started which would affect the measurement, have the right to request in writing and thereby cause the quantities involved to be measured as specified.

Contractor

TB Cheez, V. Pres.	General Contractors, Inc.	5/21/12
Signature and Title	Name of Firm	Date

Department of Transportation

D.E. Bradbury	5/24/12
Deputy Director Division of Highways, Regional Engineer	Date

EXAMPLE

PLAN QUANTITY CHECK

20200100 EARTH EXCAVATION, PLAN = 34,960 CY

- SPOT CHECKED EXISTING GRADES. SEE FB #1 FOR X-SECTIONS.
- PLAN X-SECTIONS VISUALLY COMPARED TO EXISTING GROUND ⇒ NO SIGN OF RECENT CONSTRUCTION
- DESIGN END-AREA VOLUME CALCS WERE CHECKED

NOTE: UNDERCUT VOLUMES AND LOCATIONS ARE DESIGNATED ON THE PLANS AND WILL BE FINAL MEAS. BY BEFORE & AFTER X-SECS.

∴ ACCEPT PLAN QTY.

25000200 SEEDING CL 2, PLAN = 11.8 ACRE

- STA 1034+20 TO 1108+12 = 7,392 FT., WIDTH = 34 FT.
- SEEDING AREA = $\frac{7{,}392\ ft.\ x\ 34\ ft.}{43{,}560\ sf\ /\ acre}\ x\ 2 = 11.5\ acres$
- DIFFERENCE = 0.3 ACRE. ROUGH CALC NOT INCLUDED GROUND SLOPE.

∴ ACCEPT PLAN QTY.

35600716 BIT CONC BC WID 10, PLAN = 2,464 SY

PLAN WIDTH = 1.5'

AREA = 2 X 7,393' X 1/9 = 2,464 SY ∴ ACCEPT PLAN QTY.

50300225 CONC STRUCT, PLAN = 383.5 CY

CALC. QTY = 378.1 CY (SEE CALC FILE #4)

DIFFERENCE = 5.4 CY @ $425/CY = $2,295 ∴ NOT OK

→ CONTRACTOR NOTIFIED BY LETTER ON 9-7-12

CALC BY: BC 9-7-12

Illinois Department of Transportation

Inspector's Daily Report

County

Section

Route

District

Contract No.

Job No.

Project

JOB STAMP

Date 9-21-12

Contractor or Sub. Careful Const.

Weather Hot-Humid 90's

	Initial(s)	Date
Inspected by:	JCS	9-21-12
Measured by:	JCS	9-21-12
Calculated by:	JCS	9-21-12
Checked by:	DEM	9-22-12

Item Code #	Fund Code (Opt.)	Item	Location	Quantity and Units	Evidence of Material Inspection (Optional)	Posted in Q Book
20200100	-----	Earth Excav.	16 + 20 Lt.	1709.8CY	N/A	√

This is: √ an estimated progress measurement (item no.: 20200100)

☐ a final field measurement (item no.: _____)

Remarks: (e.g., instruction to Contractor, special problems, sketches with dimensions for final measurements, computations, number of persons working, hours worked) Use reverse side, if needed.

Trailer – (6.9ft X 23.0ft X 3.6ft)/27 = 21.2CY

Tandem – (6.9ft X 14.4ft X 3.6ft)/27 = 13.2CY

80 loads (tandem) X 13.2CY X 80% = 844.8CY

51 loads (trailer) X 21.2CY X 80% = 865.0CY

Total 1709.8CY

BC 628 (Rev. 8/04)

Illinois Department of Transportation

Inspector's Daily Report

County

Section

Route

District

Contract No.

Job No.

Project

JOB STAMP

Date 7-26-12

Contractor or Sub. ACME Construction

Weather Clear, 90°

	Initial(s)	Date
Inspected by:	RG	7-26-12
Measured by:	RG	7-26-12
Calculated by:	RG	7-26-12
Checked by:	MJF	7/27/12

Item Code #	Fund Code (Opt.)	Item	Location	Quantity and Units	Evidence of Material Inspection (Optional)	Posted in Q Book
20200100		Earth Excavation	2 + 60 to 17 + 00	8372 CY	N/A	√

This is: √ an estimated progress measurement (item no.: 20200100)

☐ a final field measurement (item no.: _____)

Remarks: (e.g., instruction to Contractor, special problems, sketches with dimensions for final measurements, computations, number of persons working, hours worked) Use reverse side, if needed.

By Count: 490 Loads hauled, 70 Loads each

Equipment: 4 Terex's (TR45) & 3 Cats (621G)

TR45: 4 x 70 Loads x 25.6 CY/Load x 80% = 5734 CY

621G: 3 x 70 Loads x 15.7 CY/Loads x 80% = 2638CY

Total = 8372 CY

BC 628 (Rev. 8/04)

Illinois Department of Transportation

Inspector's Daily Report

County

Section

Route

District

Contract No.

Job No.

Project

JOB STAMP

Date 9-7-12

Contractor or Sub. Tonka Construction

Weather Sunny 80°

	Initial(s)	Date
Inspected by:	TB & AG	9-7-12
Measured by:		
Calculated by:	TB	9-7-12
Checked by:	AG	9/12/12

Item Code #	Fund Code (Opt.)	Item	Location	Quantity and Units	Evidence of Material Inspection (Optional)	Posted in Q Book
20700220		POROUS GRANULAR	STA 124+20 → 126+10 RT	92.3 CY	Approved Source & Tickets	√
		EMBANKMENT	128+70 → 129+50 RT			

Note: Final payment for PGE must be based on before and after measurements and calculations.

This is: √ an estimated progress measurement (item no.: 20700220)

☐ a final field measurement (item no.: _____)

Remarks: (e.g., instruction to Contractor, special problems, sketches with dimensions for final measurements, computations, number of persons working, hours worked) Use reverse side, if needed.

#20700220

PGE DELIVERED – FROM TICKETS: 153.8 TONS

CONVERSION FACTOR: 1.5 TON/CY (FROM MISTIC REPORT 16)

PAY 90% FOR ESTIMATED

(153.8 T/1.5 T/CY) X 0.90 = 92.3 CY

BC 628 (Rev. 8/04)

Illinois Department of Transportation

Inspector's Daily Report

County

Section

Route

District

Contract No.

Job No.

Project

JOB STAMP

Date 7-30-12

Contractor or Sub. No Joke Supply Co.

Weather Hot, Humid, Hazy

	Initial(s)	Date
Inspected by:	JCS	7/30/12
Measured by:		
Calculated by:	JCS	7/30/12
Checked by:	RLS	7/31/12

Item Code #	Fund Code (Opt.)	Item	Location	Quantity and Units	Evidence of Material Inspection (Optional)	Posted in Q Book
50800105		Rebar	Sta. 15 + 53	~~5886 lb.~~ RLS 5851 lb	List + Cert + Mark	√
50300225		Concrete Structures	Sta. 15 + 53	38.7 CY	Daily Plant Reports & Tickets & Test	√

This is: √ an estimated progress measurement (item no.: 50800105, 50300225)

☐ a final field measurement (item no.: _____)

Remarks: (e.g., instruction to Contractor, special problems, sketches with dimensions for final measurements, computations, number of persons working, hours worked) Use reverse side, if needed.

Conc. Struct. – 43 CY delivered × 90% = 38.7 CY √

Rebar Factor – $\frac{60{,}770 \text{ lb}}{402 \text{ CY}}$ = 151.2 lb/CY √

38.7 CY × 151.2 lb/CY = ~~5886~~ lb

RLS 5851 lb

Note: 60,770 lbs of rebar and 402 CY on concrete are the plan quantities for this structure taken from the Bill of Materials shown on the plans.

BC 628 (Rev. 8/04)

Illinois Department of Transportation

Inspector's Daily Report

County

Section

Route

District

Contract No.

Job No.

Project

JOB STAMP

Date 9-27-12

Contractor or Sub. SUPERIOR

Weather HOT-HUMID 90's

	Initial(s)	Date
Inspected by:	GEB	9-27-12
Measured by:		
Calculated by:	GEB	9-27-12
Checked by:	RLS	9-27-12

Item Code #	Fund Code (Opt.)	Item	Location	Quantity and Units	Evidence of Material Inspection (Optional)	Posted in Q Book
55019500		SS 1 RCP CL 4 12	STA 9+00 TO 9+50	45.0 ft.	List & Mark; (Conc. Structures Inc.)	√

This is: √ an estimated progress measurement (item no.: 55019500)

☐ a final field measurement (item no.: _____)

Remarks: (e.g., instruction to Contractor, special problems, sketches with dimensions for final measurements, computations, number of persons working, hours worked) Use reverse side, if needed.

7.5 ft per section x 6 sections= 45.0 ft

BC 628 (Rev. 8/04)

70100460 TRAF CONT & PROT 701306

DATE			PAY THIS DATE	TOTAL TO DATE	CALC'D BY	DATE	CHCK'D BY	DATE	D.Q. #
9/16/12	INITIAL SETUP		0.25	0.25	MRM	9/16/12	JGL	9/16/12	2
10/3/12	18 DAYS / 100 DAYS	x 0.65 =	0.12	0.37	"	10/3/12	"	10/4/12	29
10/31/12	28 DAYS / 100 DAYS	x 0.65 =	0.18	0.55	"	10/3/12	FCM	10 / 31 / 12	104
11/28/12	28 DAYS / 100 DAYS	x 0.65 =	0.18	0.73	"	11/28/12	JGL	11/29/12	223
12/17/12	ALL TC REMOVED PAY BALANCE		0.27	1.00	"	12/17/12	FCM	12 / 17 / 12	247

NOTE: The final entry shown includes both the remainder of the prorated 65% (0.65 - 0.12 - 0.18 - 0.18 = 0.17) and the final 10% for the removal of the traffic control.

ALL SIGNS & BARRICADES CONFORM TO SPECS

Illinois Department of Transportation

Inspector's Daily Report

County

Section

Route

District

Contract No.

Job No.

Project

JOB STAMP

Date July 17, 2012

Contractor or Sub. ACME Const. Co.

Weather Sunny Low 70's

	Initial(s)	Date
Inspected by:	JMS	7-17-12
Measured by:	JMS & TER	7-17-12
Calculated by:	TER	7-17-12
Checked by:	MBA	7-18-12

Item Code #	Fund Code (Opt.)	Item	Location	Quantity and Units	Evidence of Material Inspection (Optional)	Posted in Q Book
21101505		Top Soil Exc. & Place	Sta. 2+50 To 7+00	1449.1 C.Y.	None, topsoil taken from	
					Within R.O.W.	

This is: ☒ an estimated progress measurement (item no.: 21101505)

☐ a final field measurement (item no.:)

Remarks: (e.g., instruction to Contractor, special problems, sketches with dimensions for final measurements, computations, number of persons working, hours worked) Use reverse side, if needed.

End Areas

1.) 80' × 1.5' = 120 S.F.

2.) 85' × 2.0' = 170 S.F.

3.) 125' × 2.0' = 250 S.F.

Volumes

$V_1 = \frac{120+170}{2} \times 250' = 36{,}250$ C.F.

$V_2 = \frac{170+250}{2} \times 200' = 42{,}000$ C.F.

36,250 C.F.
+42,000 C.F.

78,250 C.F. ÷ 27 = 2898.1 C.Y.

2898.1 C.Y. × 0.50 = 1449.1 C.Y.

Will pay remaining 50% upon placement of topsoil later.

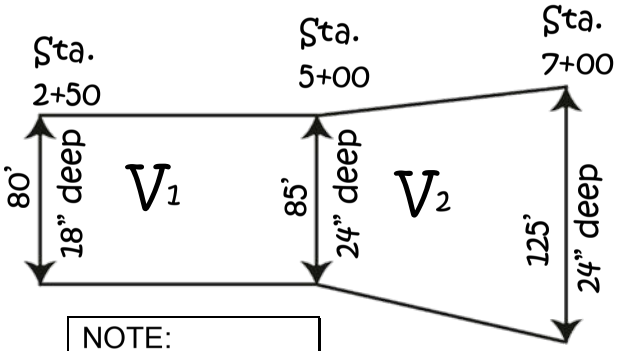

NOTE:
Stockpiled @
STA. 2+00 80'L
STA. 6+00 80'R

BC 628 (Rev. 8/04)

Pay Code	Pay Item	Plan QTY	Units
44200970	CLASS B PATCHES, TYPE II, 10 INCH	260.0	sy
44213200	SAW CUTS	1470.0	ft

Thickness 10 inches

County:	WILLIAMSON
Section:	(X1-4)81 Lake Creek
Route:	FAI RTE 57
District:	9
Contract:	98634
Job No:	C-99-088-06
Project:	

Notes:

(1) I57: RL - Ramp Lane, PL - Passing Lane, DL - Driving Lane, SB - South bound , NB - North Bound

(2) Average Depth: Pav't is the meas. depth of the exist. pav't, qty used for calculating % change. Patch is the meas. depth of the actual patch if contractor undercuts existing pav't without cause.

(3) The product of the smallest width & length of original or final measurements.

(See Patching field book for this contract for all original measurements.)

		Original Measurements							Final Measurements															
(1) Lane	Sta	Patch	Width	Length	Marked Quantities (sy)				(2) Average Depth (inches)		% Change in Thickness	Width	Length	(3) Min. Area	Quan. Adj.	Final Area	Pay Quantities (sy)				Saw Cuts	Dowel Bars	Final Meas.	
		#	(ft)	(ft)	TY I	TY II	TY III	TY IV	Pav't	Patch	%	(ft)	(ft)	(sy)	(%)	(sy)	TYI	TYII	TYIII	TYIV	(ft)	(ea)	By	Date
		Northbound Lanes																						
NBDL	193+35	17	9.0	12.0		12.0			15.00	15.00	50.0	9.1	12.0	12.0	0.20	14.4		14.4			54	20	BWC	7/12/07
NBPL	192+33	18	6.0	12.0		8.0																		
NBDL	189+80	19	8.0	12.0		10.7			16.00	16.00	60.0	8.2	12.0	10.7	0.20	12.8		12.8			52	20	BWC	7/12/07
NBDL	188+80	20	7.0	12.0		9.3			16.00	16.00	60.0	7.0	12.0	9.3	0.20	11.2		11.2			50	20	BWC	7/12/07
NBDL	187+80	21	6.0	12.0		8.0			16.00	16.00	60.0	6.0	12.0	8.0	0.20	9.6		9.6			48	20	BWC	7/12/07
NBPL	187+80	22	6.0	12.0		8.0																		
NBDL	187+15	23	6.0	12.0		8.0			16.00	16.00	60.0	6.1	12.0	8.0	0.20	9.6		9.6			48	20	DHR	7/12/07
NBPL	187+15	24	6.0	12.0		8.0																		
NBDL	185+75	25	6.0	12.0		8.0			16.00	16.00	60.0	6.1	12.0	8.0	0.20	9.6		9.6			48	20	DHR	7/12/07
NBPL	185+75	26	6.0	12.0		8.0																		
NBDL	185+38	27	6.0	12.0		8.0			16.00	16.00	60.0	6.1	12.0	8.0	0.20	9.6		9.6			48	20	DHR	7/12/07
NBPL	185+38	28	6.0	12.0		8.0																		
NBDL	182+80	29	6.0	12.0		8.0																		
NBPL	182+80	30	6.0	12.0		8.0																		
NBDL	181+80	31	6.0	12.0		8.0																		
NBPL	181+80	32	6.0	12.0		8.0																		
NBDL	181+28	33	6.0	12.0		8.0																		
NBDL	177+15	34	9.0	12.0		12.0																		
NBDL	176+21	35	6.0	12.0		8.0																		
NBDL	175+15	36	6.0	12.0		8.0																		
NBPL	175+15	37	6.0	12.0		8.0																		
NBDL	174+20	38	6.0	12.0		8.0																		
NBPL	174+20	39	6.0	12.0		8.0																		
NBDL	173+58	40	6.0	12.0		8.0																		
NBPL	173+58	41	6.0	12.0		8.0																		
NBDL	172+85	42	6.0	12.0		8.0																		
NBDL	172+25	43	6.0	12.0		8.0																		
NBDL	171+25	44	9.0	12.0		12.0																		
NBPL	171+25	45	9.0	12.0		12.0																		
NBDL	170+20	46	9.0	12.0		12.0																		
NBPL	170+20	47	6.0	12.0		8.0																		
Totals					0	272	0	0						64.00		76.80	0	77	0	0	348	140		
					272												77							

FOR EXAMPLE ONLY!

The Department does not provide, nor approve, any electronic spreadsheets. It is the responsibility of the Resident to ensure the accuracy of any spreadsheet he/she chooses to use, including any formulas that may be embedded in the spreadsheet. NEVER use any spreadsheet that you have not checked for accuracy.

Contract 62764 – Hicks Rd

50800105 Reinforcement Bars

Bar	Bar Size	No. of Bars In Place		Length (ft-in)	Length (ft)	lb/ft *	lb	Subtotals (lb)
a	9	64	√	16 ft 3 in	16.25	3.400	55.25	3536.00 lb
a1	9	64	√	6 ft 6 in	6.5	3.400	22.10	1414.40 lb
a2	9	32	√	12 ft 9 in	12.75	3.400	43.35	1387.20 lb
h	7	70	√	6 ft 8 in	6.67	2.044	13.63	954.34 lb
h1	7	28	√	6 ft 8 in	6.67	2.044	13.63	381.74 lb
h2	6	36	√	5 ft 9 in	5.75	1.502	8.64	310.91 lb
h3	6	10	√	8 ft 9 in	8.75	1.502	13.14	131.43 lb
h4	5	204	√	3 ft 6 in	3.5	1.043	3.65	744.70 lb
v	7	21	√	10 ft 0 in	10	2.044	20.44	429.24 lb
v1	7	12	√	8 ft 6 in	8.5	2.044	17.37	208.49 lb
x	6	4	√	3 ft 9 in	3.75	1.502	5.63	22.53 lb

** per table (Art 508.07)*

Total = 9520.98 lb

Total Weight of Rebar = 9520.98 lb

Theoretical Volume of Concrete = 31.0 cy
(See Calc file 54003000 Concrete Box Culvert)

Rebar/Concrete factor 9520.98lb / 31.0 cy = 307.1 lb/cy

Example Calculation

for a bar
Length x lb/ft = lb *16.25 ft x 3.4 lb = 55.25 lb*

no. of bars x lb = subtotals (lb) *64 x 55.25 lb = 3536.00 lb*

FOR EXAMPLE ONLY!

The Department does not provide, nor approve, any electronic spreadsheets. It is the responsibility of the Resident to ensure the accuracy of any spreadsheet he/she chooses to use, including any formulas that may be embedded in the spreadsheet. NEVER use any spreadsheet that you have not checked for accuracy.

	Initials	Date
Prepared by:	BCA	10/10/12
Checked by:	MRL	10/10/2012

Illinois Department of Transportation

Date 9/5/2012

County Jefferson

Section (14-3, 3-1) RS-2

Route FAI 57

District 7
Contract No. 94270
Job No. C-97-062-12

Project IM-57-3(133)94

Material Allowance Affidavit

Itemized Material Statement

Item of Material	Quantity	Unit Cost	Amount
Mast Arms	8	2,640.00	21,120.00

Freight on Material 702.47

Total 21,822.47

Allowed on Est. No. _____

Proof of Payment Rec'd _____

I hereby certify that the above material has been received and properly stored.

_____
Resident's Signature

AFFIDAVIT

STATE OF ILLINOIS
ss.
County of Jefferson

John Smith being first duly sworn, deposes and says that he is the duly authorized representative of the Quality Contracting Inc. Company and as such has authority to make the following statement:

I hereby, certify that the material herein mentioned has been received and stored in a manner satisfactory to a representative of the Department of Transportation. Further, that said material is to be used for the purposes of constructing the Contract captioned above.

I further certify that the within statement is true and correct and that the purpose of this affidavit is to obtain payment for material in storage.

By John Smith Contractor

Subscribed and sworn to before me this 5th day of September, 2012

(Notary Seal)

OFFICIAL SEAL"
MARY JONES
Notary Public, State of Illinois
My Commission Expires 06/27/14

Mary Jones
Notary Public

My commission expires 6/27/14

BC 49 (Rev. 5/06)

Illinois Department of Transportation

Statement of Material Allowances

County	Jefferson
Section	(14-3, 3-1) RS-2
Route	FAI 57
District	7
Contract No.	94270
Job No.	C-97-062-12
Project	IM-57-3(133)94

Submit with
Resident's Pay Estimate Report

Estimate No. 05

1	2	3	4	Quantity			8	9 (7x8)
Description of Material (Followed by Pay Items it will be used in.)	Unit	Receipted Bill Due	Receipted Bill Received	5 Total from Form (s) BC-49	6 Paid for in place to date	7 (5-6) Remaining in storage	Contractor's cost/unit	Value
Mast Arms 87702980 S MAA&P50	Each	* 11-15-12		8	0	8	2,727.81	21,822.48

Note: 1. Quantity must not exceed the adjusted plan quantity.
2. Once the material is paid on an estimate if may not be used on another project unless it is first completely removed from payment on the previous contract. This may not be possible if there is not sufficient funds in that contract to deduct the material allowance. Guardrail and Aggregate items are particularly vulnerable to being removed to another project without your knowledge and possibly being paid for twice.

Hint: When the contractor invoice consists of several components that make up a pay item such as guardrail, divide the total amount of the invoice by the unit of measurement of the pay item and calculate a unit price.

*Use 70 days from the date you mail the estimate. This allows 10 days for the contractor to receive his or her payment plus 60 days to pay the material supplier.

Original - Bureau of Construction
cc - District File
Resident

Approved: Sam Miller
Resident

Subtotal this Page $ 21,822.48
Value of material on hand:
Sum of column 9 = $ 21,822.48

BC 131 (Rev. 03/10/09)

Illinois Department of Transportation

Quantity Sheet

County 177 Stephenson

Section 20RS-1 & 20BR

Route FAP 5

District 02
Contract No. 84776
Job No. C-92-072-12

Project STPF-BRF-0005/050/000

Page 235
Item 40603310
HMA SC "C" N50
Fund 33DC01
Plan Quantity 3397.000
Unit Measure TON
Contract Unit Price 77.08

Authorizations

Number	Date App'vd	Add	Deduct	Total
8	10/13/12	25.0		3,422.0

Cnty	Const	Sfty	Quantity
177	I000	2A	3397.000

Date	Station to Station Location or Description	Quantities Placed This Date	Quantities Placed To Date	Quantities Placed Pay Est	Evidence of Material Inspection	Progress Document Source
	Per Art. 406.13, the Adjusted Plan Quantity is as follows →					
	Avg. Bulk Specific Gravity from the approved mix design (little d) = 2.34					
	C= $\frac{G_{mb} \times 46.8}{U}$ = $\frac{2.34 \times 46.8}{112}$ = 0.978					
	Adj Plan Qty = 0.978(3,397) = 3,322.3 tons					
9/2/12	STA 62+03 → 118+27 NB	865.8	865.8		Daily Plant Rpt. & Tickets & Test	Tickets
9/3/12	STA 118+27 → 175+79 NB	885.5	1,751.3		" "	
9/4/12	STA 175+19 → 119+27 SB	861.0	2,612.3		" "	
9/5/12	STA 119+29 → 62+03 SB	872.7	3,485.0	#5/3397	" "	
9/9/12	Deduct for Max Pay	-63.0	3,422.0	#6		
			FINAL			
	Max. Pay = 3,322.3 tons x 1.03 = 3,422.0 tons → Deduct Pay Qty					
	Quan. Placed 3,485.0 – Max. Pay 3,422.0 = Deduct 63.0					
	The surface was checked and no variations found. See FB #3, p. 35.					

Source of documentation
for final quantity: Tickets

IL 494-0424

BC 625 (Rev. 4/98)

For all tonnage items
weighed on platform scales:
Scales checked by
Dept. Of Agriculture
Date on decal 2012
Identification No. 074346
Scale Location General
Plant 1, Rock Falls

Inspection Reports

Date	Mistic Report No. or Source or Manufacturer	Amount	Total to Date	Transferred to Other Code or Remarks
9/2/12	MI-305, Daily Bit Plant	865.8	865.8	
9/3/12	Output	887.5	1,753.3	
9/4/12		861.0	2,614.3	
9/5/12		875.5	3,489.8	

Illinois Department of Transportation

Inspector's Daily Report

County

Section

Route

District

Contract No.

Job No.

Project

JOB STAMP

Date 9-19-12

Contractor or Sub. B & M Constr.

Weather Sun, 80°

	Initial(s)	Date
Inspected by:	JS	9-19-12
Measured by:	JS & DF	9-19-12
Calculated by:	JS	9-19-12
Checked by:	DF	9-20-12

Item Code #	Fund Code (Opt.)	Item	Location	Quantity and Units	Evidence of Material Inspection (Optional)	Posted in Q Book
42400100	07A001	PC Conc. Sidewalk 4	RT 0+00-	2,500	Plant Report & Tickets & Test	√
			RT 5+00	SF		

This is: ☐ an estimated progress measurement (item no.: _____)

√ a final field measurement (item no.: 42400100)

Remarks: (e.g., instruction to Contractor, special problems, sketches with dimensions for final measurements, computations, number of persons working, hours worked) Use reverse side, if needed.

Depth Checks

STA 0+00 = 4.05"
1+00 = 4.10"
2+00 = 4.10"
3+00 = 4.05'
4+00 = 4.00"
5+00 = 5.00"

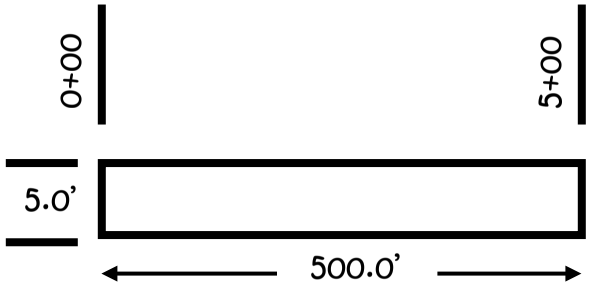

5.0' X 500.0' = 2,500.0 SF

F-36

BC 628 (Rev. 8/04)

Illinois Department of Transportation

Truck Tare Weights

Date 7-25-2012

Contractor Frozen

Scale Location Kinderhook

Material CA-6

County

Section

Route

District

Contract No.

Job No.

Project

JOB STAMP

Truck or License Number	Name on Truck	Tare Weight	Driver in Truck?
19	LUMLEY	20,000	☒ Yes ☐ No
44	LUMLEY	20,500	☒ Yes ☐ No
21	LUMLEY	20,800	☒ Yes ☐ No
22	LUMLEY	21,000	☒ Yes ☐ No
43	LUMLEY	20,100	☒ Yes ☐ No
40	LUMLEY	20,000	☒ Yes ☐ No
			☐ Yes ☐ No
			☐ Yes ☐ No
			☐ Yes ☐ No
			☐ Yes ☐ No
			☐ Yes ☐ No
			☐ Yes ☐ No
			☐ Yes ☐ No
			☐ Yes ☐ No
			☐ Yes ☐ No
			☐ Yes ☐ No
			☐ Yes ☐ No
			☐ Yes ☐ No
			☐ Yes ☐ No

Note: Tare weights of trucks hauling material to Department of Transportation projects must be established daily when pay quantities are determined by platform scale weights.

Department of Agriculture scale certification information:

Date 2012

Certificate No. 35044

PETE DONNER
Inspector

Mike Hammley
Resident

IL 494-0457

BC 1465 (Rev. 9/97)

Illinois Department of Transportation

Independent Truck Weight Check\ Action Report

Bituminous

District 5

Instructions: At random, select a loaded truck and obtain a loaded weight on an independent scale. Allow the truck to unload then obtain an empty weight. All information (except * fields) is required. E-mail your submission to: DOT.ITWC@illinois.gov
DO NOT SUBMIT FORMS MISSING INFORMATION.
See Construction Manual and Article 109.01 of the Standard Specifications Book for additional information.

Ticket Information

Load Ticket Number	047488	Supplier Name	Cross Construction
Loaded Weight (Gross)*	73,260	City	Urbana
Empty Weight (Tare)*	28,180	Supplier Code	3916-03
Load Ticket Weight (Net)	45,080	Scale Decal No.	006320
		Decal Date	2013

Independent Scale Information

Loaded Weight (Gross)	73,260	Scale Location	Bunge(Dump 2)/Danville
		Scale Decal No.	006151
Empty Weight (Tare)	28,080	Decal Date	2013
		Name of Truck	Gilbert
Calculated Net Weight	45,180	Truck: ID:	456
		License Plate: 610 78 45	State: IL

Tolerance -.22 %

Ticket Weight – Ind Wt Ck Net Weight / Ind. Wt. Ck. Net Wt. x 100

Tolerance for bituminous should not exceed 0.50%.
Tolerance for aggregates should not exceed 0.70%.

Contracts 90939

List all contracts using material from this supplier this week.

Calculated By	Matt A. Young (Print Name Clearly)	Initials MAY	Date 08/21/2013
Weighs Verified By	Matt A. Young (Print Name Clearly)	Initials MAY	Date 08/21/2013

E-Mail Your Submission to: DOT.ITWC@illinois.gov

cc: Contractor
Resident
District Office

Hard Copy Submission:
Illinois Department of Transportation
Office of Quality Compliance and Review,
2300 South Dirksen Parkway, Springfield, IL 62764

DO NOT SUBMIT A HARD COPY IF AN ELECTRONIC COPY HAS BEEN SUBMITTED.

Printed: 9/5/2013

OQCR 2367 (09/14/10)
Formerly BC 2367

Illinois Department of Transportation

Action Report

Date: 08/21/2013 Contract Number: 90939

☒ An Independent Weight Check was performed today and passed. No further action is required.

☐ An Independent Weight Check was performed today and failed. Complete this form within 48 hours and send to the Office of Quality Compliance and Review, Gene.Thomen@illinois.gov and DOT.ITWC@illinois.gov If you have any questions, please contact Gene Thomen's (Cell) at 847-846-3132 or (Office) at 217-558-4617. Thank you in advance for your cooperation.

Weight Check Reviewer: Matt A. Young (Print Name Clearly) Phone Number 217-251-0004

Supplier: Cross Construction (Name) Urbana, IL (City) Phone Number: 217-367-3526

Report Action Taken to Correct Scale:

Resident Engineer's Signature: _____

Resident Engineer: Matt A. Young (Print Name Clearly) 217-251-0004 (Phone Number)

NOTE: Resident Engineer to receive a copy of Independent Weight Check and Action Report.

Printed: 9/5/2013

OQCR 2367 (09/14/10)
Formerly BC 2367

Print Name Clearly | Phone Number

NOTE: Resident Engineer to receive a copy of Independent Weight Check and Action Report.

Illinois Department of Transportation

Action Report

If the truck is out of tolerance the contractor may request the empty truck to be taken to another independent scale to verify the empty weight.

If the contractor requests a check on the independent scale, please fill out the information below.

2nd INDEPENDENT SCALE INFORMATION

Scale Location _____

Scale Decal No. _____

Decal Date _____

Name of Truck _____

Truck: ID _____

Empty Weight of Truck _____

Remarks:

Ticket Tape Example, Aggregate Base Course, Type A (English)

8-7-12
35100100
AGG BASE CSE A
STA 1+20
to 19+00

	0.	C
	24,300.	+
Contract 90002	23,700.	+
	22,300.	+
	24,700.	+
	23,500.	+
	22,900.	+
	25,500.	+
	23,700.	+
	23,800.	+
	22,800.	+
	24,000.	+
	23,100.	+
	23,600.	+
	24,100.	+
	23,800.	+
	24,300.	+
	23,400.	+
	24,300.	+
	22,800.	+
	25,600.	+
	23,200.	+
	24,000.	+
	23,900.	+
	547,300	*
	LBS	
	547,300.	÷
	2,000	=
	273.65	*
	tons	

Calc by: JWS 8-7-12
Check by: RH 8-8-12

Actual Moisture = $\frac{220.9 - 206.1}{206.1}$ = 0.072

Pay Wt. = $\frac{273.65 \times 1.06}{1.072}$

= 270.6 TONS

This is an example of the documentation requirement for granular pay items paid on a tonnage basis.

This adding machine tape is to be securely bound around the truck tickets for each pay item for each day.

NOTE: Refer to Small Quantities provision in Section A of doc guide. No moisture correction required if less than 500 tons per day, however IDOT reserves right to perform moisture correction on any amounts delivered.

Illinois Department of Transportation

Inspector's Daily Report

County

Section

Route

District

Contract No.

Job No.

Project

JOB STAMP

Date 7-20-12

Contractor or Sub. ACME Construction

Weather Cloudy, 82°

	Initial(s)	Date
Inspected by:	KWH	7-20-12
Measured by:		
Calculated by:	KWH	7-20-12
Checked by:	SJM	7-23-12

Item Code #	Fund Code (Opt.)	Item	Location	Quantity and Units	Evidence of Material Inspection (Optional)	Posted in Q Book
25000700		Agricultural Ground Limestone	Entire Job (20 acres)	83.5 tons	Tickets from approved aggregate source	√
					List – Charleston Stone Co. @	
					Charleston, IL (Coles County)	
					West Pit, see wt. tickets in	
					File #6 (list & tick)	

This is: ☐ an estimated progress measurement (item no.: _____)

√ a final field measurement (item no.: 25000700)

Remarks: (e.g., instruction to Contractor, special problems, sketches with dimensions for final measurements, computations, number of persons working, hours worked) Use reverse side, if needed.

Plans require 4 Tons/acre to be applied to 20 acres

From "Agricultural Limestone Booklet" at www.dot.il.gov/materials/materialslist.html,

The 4 year conversion factor = 0.85

Total tons required = 4 T/acre x 20 acres x 0.85 = 68.0 Tons

Actual tons delivered = 71.0 Tons (see Tickets)

Pay Qty. = 71.0 tons ÷ 0.85 = 83.5 tons (Max Pay 80 tons x 1.08 = 86.4 Tons)

Illinois Department of Transportation

Inspector's Daily Report

County

Section

Route

District

Contract No.

Job No.

Project

JOB STAMP

Date 9-13-12

Contractor or Sub. Interstate Landscaping

Weather Sunny, 81°

	Initial(s)	Date
Inspected by:	KWH, SM	9-13-12
Measured by:	KWH, Sm	9-13-12
Calculated by:	KWH	9-13-12
Checked by:	SM	9-18-12

Item Code #	Fund Code (Opt.)	Item	Location	Quantity and Units	Evidence of Material Inspection (Optional)	Posted in Q Book
25000200		Seeding, Class 2	STA. 1 +00 TO	4.5 ACRE	Certificate of Seed Analysis From	
			19 + 00 LT.		Registered Seed Technologist	
25100120		Mulch Method 2	" "	9.0 TON	Straw – Visual	
Application Rates	Seed	675 lb. Delivered →	Rate = 675LB/4.5AC=150	LB/ACRE √	Emulsified Asphalt – Tickets	
	Straw	9.0 Tons Delivered →	Rate = 9.0T/4.5 AC = 2	Ton/Acre √	From Approved Source	
	Emulsion	675 gal Delivered →	Rate=675 Gal/9.0Ton= 75	Gal/Ton √		

This is: ☐ an estimated progress measurement (item no.: _____)

√ a final field measurement (item no.: 25000200, 25100120)

Remarks: (e.g., instruction to Contractor, special problems, sketches with dimensions for final measurements, computations, number of persons working, hours worked) Use reverse side, if needed.

$\frac{1}{2}$ (109.6 + 112.4) × 646.7 = 71,783.7 s.f.

$\frac{1}{2}$ (112.4 + 109.7) × 452.2 = 50,216.8

$\frac{1}{2}$ (109.7 + 102.0) × 699.3 = 74,020.9

196,021.4 s.f.

196,021.4 s.f. × $\frac{1 \text{ acre}}{43{,}560 \text{ sf}}$ = 4.5 acre

NOTE: All Measurements Taken on Slope!

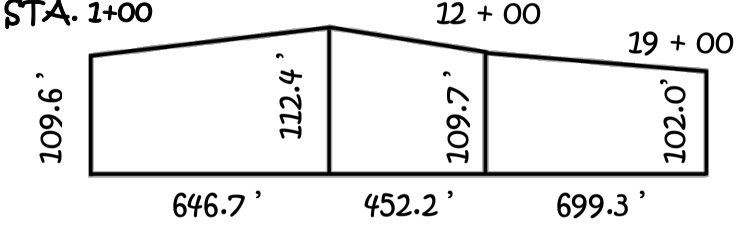

BC 628 (Rev. 8/04)

Illinois Department of Transportation

CONTRACTOR WORKED 8:00 am – 4:30 PM
PAY: 15.5/24 = 0.65 CAL DAY
CALC'D BY: REJ 9-18-12 CK'D BY: JAM 9-18-12

Traffic Control Surveillance Report

Contractor	Contract No.	Date
General Contractors, Inc.	99999	9/17/12

Time of Inspection	Signature	Weather	Comments and/or Corrective Action
Midnight			
1 A.M.			
2 A.M.	Mike Jones	LIGHT RAIN, 50°	ALL TRAFFIC CONTROL GOOD
3 A.M.			
4 A.M.			
5 A.M.			
6 A.M.	Mike Jones	LIGHT FOG, CALM, 50°	ALL TRAFFIC CONTROL GOOD
7 A.M.			
8 A.M.			
9 A.M.			
10 A.M.			
11 A.M.			
Noon			
1 P.M.			
2 P.M.			
3 P.M.			
4 P.M.			
5 P.M.			
6 P.M.	Jack Hammer	Ptly, cloudy, 54° F	Traffic control ok.
7 P.M.			
8 P.M.			
9 P.M.			
10 P.M.	Jack Hammer	Clear and calm, 46° F	Moved barricade back in place. Traffic control ok.
11 P.M.			

Note: No payment should be made for the day if *any* of the inspections are missed.

Distribution: Contractor
Resident

Completed forms must be turned in to the Resident the next working day.

BC 2240 (Rev. 9/97)

Illinois Department of Transportation

Inspector's Daily Report

County

Section

Route

District

Contract No.

Job No.

Project

JOB STAMP

Date September 6, 2012

Contractor or Sub. Artful Const.

Weather Partly Cloudy, 76°

	Initial(s)	Date
Inspected by:	WNP	9/6/12
Measured by:	WNP & CJ	9/6/12
Calculated by:	WNP	9/6/12
Checked by:	JS	9/12/12

Item Code #	Fund Code (Opt.)	Item	Location	Quantity and Units	Evidence of Material Inspection (Optional)	Posted in Q Book
50200100		Structure Excav.	Pier #2 @	239.4 CY		√
			Sta. 47 + 23.61			

This is: ☐ an estimated progress measurement (item no.: _____)

√ a final field measurement (item no.: 50200100)

Remarks: (e.g., instruction to Contractor, special problems, sketches with dimensions for final measurements, computations, number of persons working, hours worked) Use reverse side, if needed.

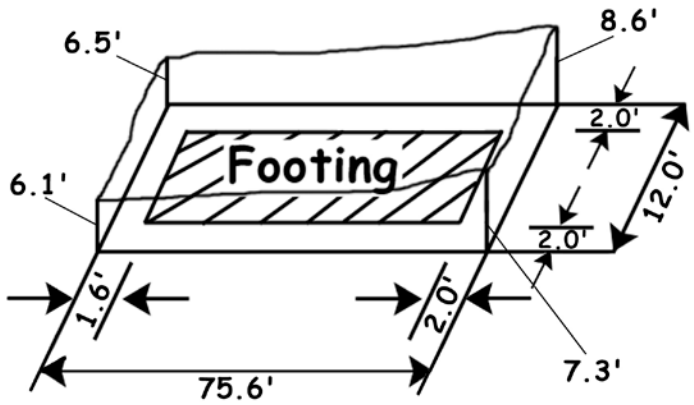

$$\text{Vol} = \left(\frac{8.6' + 7.3' + 6.1' + 6.5'}{4}\right) \times 75.6' \times 12.0' \times 1/27 = 239.4 \text{ CY}$$

NOTE:
Max allowable pay width = 2.0 ft + ftg. Width + 2.0 ft.
Max allowable pay length = 2.0 ft. + ftg. Length + 2.0 ft.

See FB #3, p. 23 for layout

IL494-0425

BC 628 (Rev. 8/04)

Illinois Department of Transportation

Inspector's Daily Report

County

Section

Route

District

Contract No.

Job No.

Project

JOB STAMP

Date 8-15-12

Contractor or Sub. Stan's Sewer Co.

Weather Clear, 70's

	Initial(s)	Date
Inspected by:	RCW	8-15-12
Measured by:	RCW & LMF	8-15-12
Calculated by:	RCW	8-15-12
Checked by:	MJF	8-23-12

Item Code #	Fund Code (Opt.)	Item	Location	Quantity and Units	Evidence of Material Inspection (Optional)	Posted in Q Book
20800150		Trench Backfill	MH #3 to MH#4	55.2 CY	Approved Srce. & Shipment Ticket	
					(Mid-America S&G)	
55022000		SS 2 RCP CL 3 24	MH# 3 to MH#4	66.6 FT	List and Mark (CMCM)	

This is: ☐ an estimated progress measurement (item no.: _____)

√ a final field measurement (item no.: 20800150, 55022000)

Remarks: (e.g., instruction to Contractor, special problems, sketches with dimensions for final measurements, computations, number of persons working, hours worked) Use reverse side, if needed.

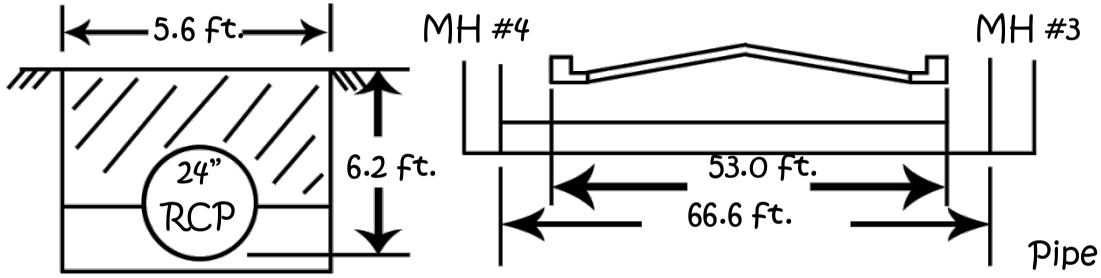

Trench Backfill:

Pay Length = 2' + 53' + 2' = 57.0'

Trench Width > Max Pay Width

Therefore Use Table

$0.968 \frac{CY}{FT} \times 57.0' = 55.2\ CY$

Pipe Markings: C-76-III

7-12-12 CMCM

CALC BY: jws 11-8-12
CHECK BY: MLC 11/8/12

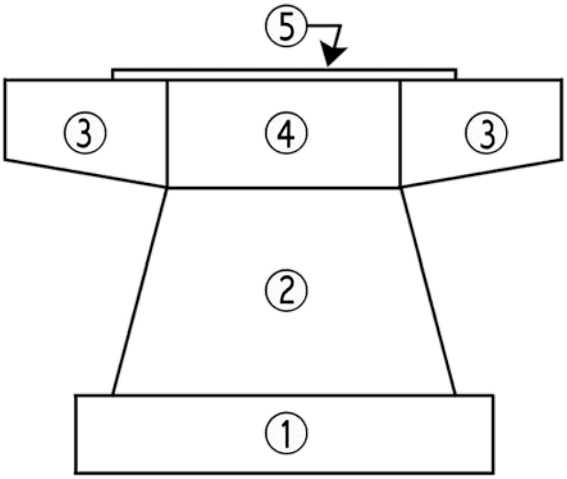

50300225

CONCRETE STRUCTURES

1. 8.5' × 2.25' × 18.33' × 1/27 (no deduction for steel H-pile) = 12.98

2. $\frac{12.0 + 16.0}{2} \times 16.25' \times 2.5' \times \frac{1}{27}$ = 21.06

3. $2\left(\frac{2.5 + 5.5}{2}\right) \times 8.00' \times 2.5' \times \frac{1}{27}$ = 5.93

4. 12.00' × 5.50' × 2.50' × 1/27 = 6.11

5. 16.00' × 0.11' × 2.17' × 1/27 = 0.14

Total Conc. Pier 2 46.2 cu yd

50800105

REINFORCEMENT BARS

Bar	Size	No.	Length Ea.	#5	#6	#9	#11
h9	5	4	27' – 9"	111.0			
h10	5	4	23' – 0"	92.0			
h11	5	36	11' – 9"	423.0			
n	5	36	4' – 10"	174.0			
p1	11	10	27' – 9"				277.5'
p2	5	8	9' – 3"	74.0			
s1	5	56	6' – 8"	373.3			
s2	5	36	8' – 8"	312.0			
s3	5	18	9' – 8"	174.0			
t1	9	22	8' – 3"			181.5'	
u1	6	6	10' – 3"		61.5'		
v7	5	36	20' – 6"	738.0			
w1	5	8	18' – 0"	144.0			
		Total Length Each Size		2615.3'	61.5'	181.5'	277.5'
		× lbs./ft.		1.043	1.502	3.400	5.313
		Total lbs. each size		2727.8	92.4	617.1	1474.4

Total lbs. rebar pier #2 = 4912 lbs.

SUMMARY OF FIELD COMPUTATIONS

JOB STAMP

County
Section
Route
District
Contract No.
Job No.
Project No.

50300225 CONC STRUCT
50300255 CONC SUP-STR
50800105 REINFORCEMENT BARS
50800205 REINF BARS, EPOXY CTD.

LOCATION	CALCULATED BY	CHECKED BY	PLAN QTY.	CALC. QTY.	PAY QTY.
CONCRETE SUPERSTRUCTURES					
DECK	JCS 8-23-12	BDL 9-1-12	257.4 CY	259.8 CY	259.8 CY
PARAPETS	JCS 8-23-12	PLAN CHECKS	23.0	23.2	23.2
		TOTAL	280.4 CY		283.0 CY

ADD ~~2.0~~ CY AUTH #2

2.6

CONCRETE STRUCTURES

2 ABUTMENTS	BDL 8-23-12	PLAN CHECKS	77.8 CY	77.5 CY	77.5 CY
PIERS 1 & 3	BDL 8-23-12	PLAN CHECKS	136.4	136.4	136.4
PIER 2	BDL 8-24-12	JCS 8-24-12	79.0	74.0	74.0
		TOTAL	293.2 CY		287.9 CY

DEDUCT 5.3 CY AUTH. #2

REINFORCEMENT BARS, EPOXY COATED

DECK	BDL 8-24-12	jcs 8-24-12	52,910 LB	52,804	52,804 LB
PARAPETS	jcs 8-23-12	PLAN CHECKS	1,840	1,844	1,844
		TOTAL	54,750 LB		54,648 LB

DEDUCT 102 LBS AUTH. #2

REINFORCEMENT BARS

2 ABUTMENTS	JCS 8-30-12	PLAN CHECKS	5,760 LB	5,756 LB	5,756 LB
PIERS 1 & 3	BDL 9-1-12	PLAN CHECKS	8,690	8,691	8,691
PIER 2	BDL 8-30-12	PWR 8/30/12	6,030	5,912	5,912
		TOTAL	20,480 LB		20,359 LB

DEDUCT 121 LBS AUTH. #2

Illinois Department of Transportation

Inspector's Daily Report

County

Section

Route

District

Contract No.

Job No.

Project

JOB STAMP

Date 8-15-2012

Contractor or (Sub) Acme Construction

Weather Clear 75°

	Initial(s)	Date
Inspected by:	CJ	8-15-12
Measured by:	CJ	8-15-12
Calculated by:		
Checked by:	MR	8-15-12

Item Code #	Fund Code (Opt.)	Item	Location	Quantity and Units	Evidence of Material Inspection (Optional)	Posted in Q Book
54248500		Concrete Headwalls	RR Culvert at Lt & Rt. Sta 10+50	16.5 CY	Plant Report & Tick. & Test	
50800105		Rebar	RR Culvert at Lt & Rt. Sta 10+50	1020 lbs	List & Mark	

This is: ☐ an estimated progress measurement (item no.: _____)

√ a final field measurement (item no.: all)

Remarks: (e.g., instruction to Contractor, special problems, sketches with dimensions for final measurements, computations, number of persons working, hours worked) Use reverse side, if needed.

Built according to Std. 542111-01 for 72" pipe @ 1:2 slope.

$$\frac{17.0\ yd^3}{16.5\ yd^3} = 1.03\%$$ Yield Check Concrete

BC 628 (Rev. 8/04)

SURFACE VARIATIONS

6/26/12 PG. 39

CLEAR, 83°

ITEM XXX21600 SURF VAR BSBC I 2T

LANE	WHEEL PATH	STATION
EB	L	787+43
		788+16
		+22
		+25
		793+37
		798+75
		814+43
EB	R	788+16
		+22
		790+48
		793+37
		798+72
		+75
		814+43
TOTAL =		14 EACH

Measured By: MD 6/26/12
Calculated By: MD 6/26/12
Checked By: VC 6/26/12

NOTE: Per Article 406.11 of the Standard Specifications, the cost of one or two tons of surface mix shall be deducted from the contract for each surface variation measured in the wheel paths. This information would be shown in the explanation on the authorization:

Cost of 1 ton of Surface		
Cost of 2 tons	=	$ 73.43
14 variations @ $146.86	=	$146.86
	=	$2,056.04 total deduction

On the authorization show a negative unit price (-146.86), and a positive quantity (14 Each) which will result in a "negative addition" to the authorization.

Illinois Department of Transportation

Quantity Sheet

County 117

Section 59-1, 2(I-2); 68-1, 2(I-2)

Route FAI 55

District 06
Contract No. 72B21
Job No. C-96-023-12

Project

Page 16
Item 70100800
TRAF CONT PROT 701401
Fund 07E0A01
Plan Quantity 1.000
Unit Measure L SUM
Contract Unit Price 28000.00

Authorizations

Number	Date App'vd	Add	Deduct	Total

Cnty Const Sfty	Quantity
117 I000 2A	1.000

Date	Station to Station Location or Description	Quantities Placed This Date	Quantities Placed To Date	Quantities Placed Pay Est	Evidence of Material Inspection	Progress Document Source
	From Progress Schedule Total				N/A	- - - - -
	Est. Months of Use = 9					
3/22/12	Initial Setup	0.25	0.25			
4/3/12	0.5 MO/9 MO. X 65%	0.04	0.29	#1		
4/27/12	1 MO/9MO x 65%	0.07	0.36	#2		
5/29/12	"	0.07	0.43	#3		
6/25/12	"	0.07	0.50	#4		
7/24/12	"	0.07	0.57	#5		
8/29/12	"	0.07	0.64	#6		
9/20/12	"	0.07	0.71	#7	*Note: The Total Value Of Work Items Covered By This Traffic Control Item Increased By 10%. See Calc. On Opposite Page.	
10/25/12	"	0.07	0.78	#8		
11/27/12	TRAF CONT. REMOVED	0.22	1.0	#9		
			FINAL			

Source of documentation
for final quantity: - - - - - -

BC 625 (Rev. 4/98)

XXX03100 T.C. PRICE ADJUSTMENT FOR STD. 701401

DESCRIPTION	UNIT	UNIT PRICE	PLAN QTY	PLAN COST	FINAL QTY	FINAL COST
CLA PATCH T2 12	SQ.YD.	$185.00	155	$28,675.00	169.6	$31,376.00
CLA PATCH T3 12	SQ.YD.	$160.00	48	$7,680.00	59.5	$9,520.00
CLA PATCH T4 12	SQ.YD.	$155.00	31	$4,805.00	30.2	$4,681.00
CLA PATCH T2 14	SQ.YD.	$200.00	159	$31,800.00	193.1	$38,620.00
CLA PATCH T3 14	SQ.YD.	$190.00	16	$3,040.00	0.0	$0.00
PATCH REINF.	SQ.YD.	$60.00	420	$25,200.00	459.1	$27,546.00
SAW CUTS	FT.	$1.00	3059	$3,059.00	3241.4	$3,241.40
SUBGRADE REPAIR	DOLLAR	$1.00	0	$0.00	852.05	$852.05
CLA PATCH T2 13	SQ.YD.	$190.00	11	$2,09000	10.6	$2,014.00
TIE BARS	EACH	$15.00	12	$180.00	10.0	$150.00
			TOTAL	$106,529.00		$118,000.45

$$\frac{(\text{FINAL COST} - \text{PLAN COST})}{\text{PLAN COST}} = \frac{(118{,}000.45 - 106{,}529.00)}{106{,}529.00}$$

$= 10.768\% > 10\%$

THEREFORE - ADJUSTMENT NEEDED

P = 28,000 (BID UNIT PRICE FOR STD. 701401)

$$X = \frac{(118{,}000.45 - 106{,}529.00)}{106{,}529}$$

ADJ. UNIT PRICE = 0.25P + 0.75P[1 + (X - 0.1)]

= 28,161.36

ADJUSTMENT = $28,161.36 - $28,000 = $161.36

Measured By:
Calculated By: MD 6/26/12
Checked By: VMC 6/26/12

PAY XXX03100 = $161.36

Illinois Department of Transportation

Quantity Sheet

County 117

Section 59-1, 2(I-2); 68-1, 2(I-2)

Route FAI 55

District 06
Contract No. 72B21
Job No. C-96-023-12

Project

Page 27
Item XXX03100
Traf Cont Price Adj
Fund 07E0A01
Plan Quantity 0
Unit Measure L SUM
Contract Unit Price 161.36

Authorizations

Number	Date App'vd	Add	Deduct	Total
16	12/19/12	1.0		1.0

Cnty Const Sfty	Quantity
117 I000 2A	0.000

Date	Station to Station Location or Description	Quantities Placed			Evidence of Material Inspection	Progress Document Source
		This Date	To Date	Pay Est		
12/12/12	Price Adjustment	1.0	1.0		N/A	See calc file
	Of 70100800 Traf.		FINAL			
	Cont. & Protection					
	Std 701401					

Source of documentation for final quantity: See spreadsheet in calc file

BC 625 (Rev. 4/98)

87301245 ELCBL C SIGNAL 14 5C

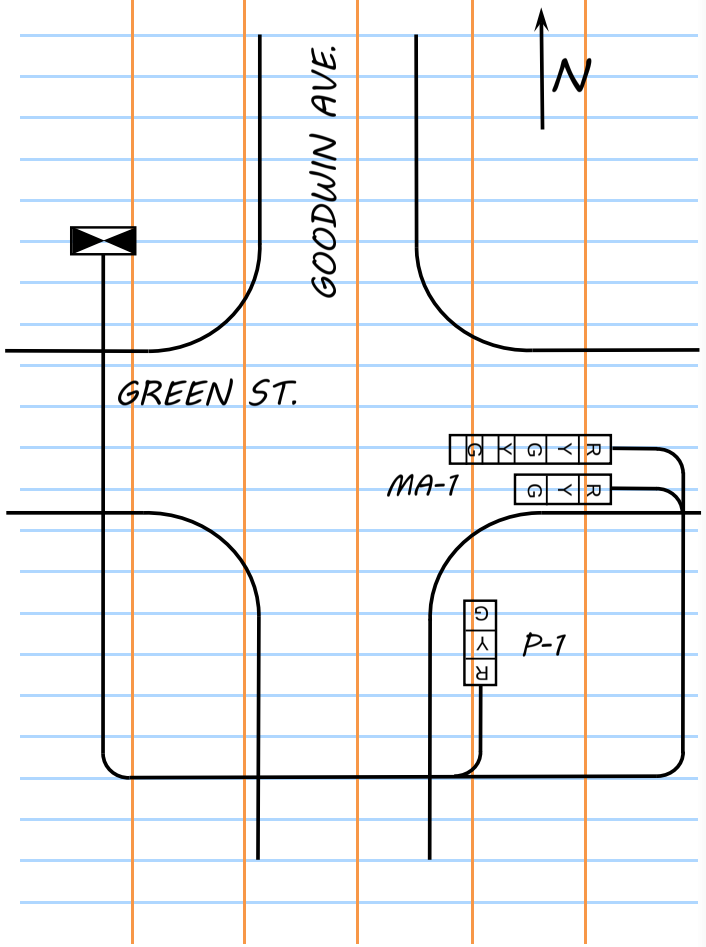

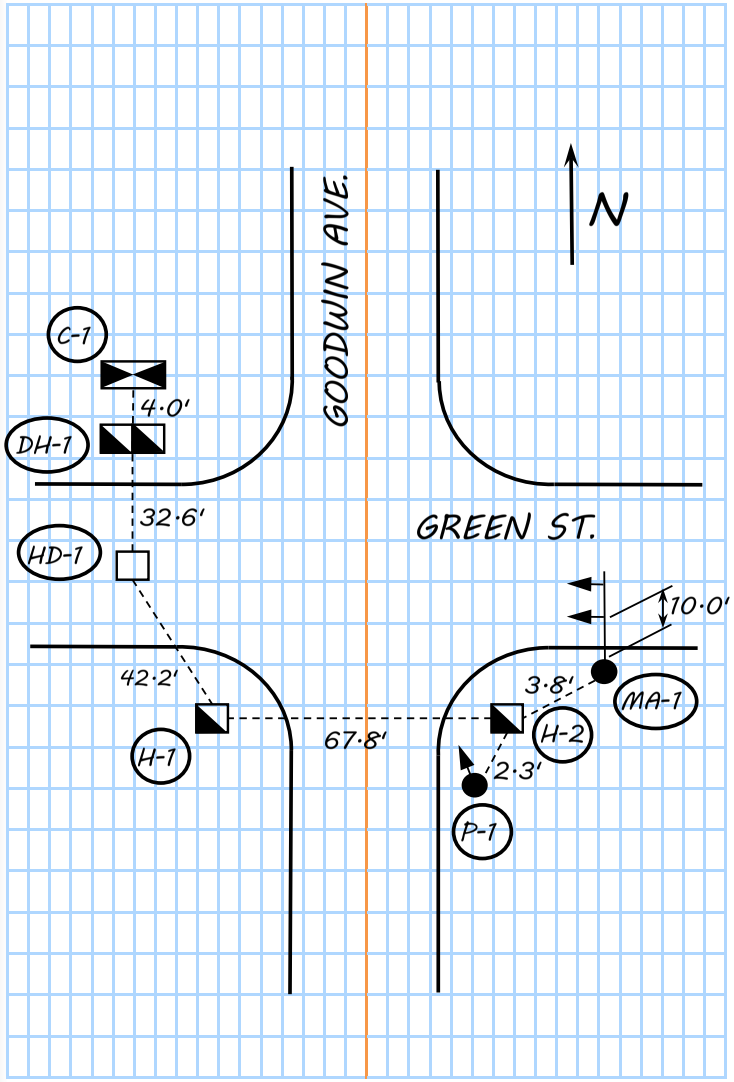

87301245 ELCBL C SIGNAL 14 5C

DATE	FROM	TO	LENGTH	SLACK	VERTICAL	RUN TOTAL	TOTAL	NOTES
6/21	C-1	DH-1	4·0'	13·0'	3·0'			SEE PAGE 43 FOR SCHEMATIC AND MEASUREMENTS
	DH-1	HD-1	32·6'	6·5'				
	HD-1	H-1	42·2'	6·5'				
	H-1	H-2	67·8'	6·5'				
"A-1"	SUBTOTAL		146·6'	32·5'	3·0'			
	H-2	P-1	2·3'		3·0'			
	P-1	SIGNAL HEAD			13·0'	200·4'		
"A-1"	C-1	H-2	146·6'	32·5'	3·0'			
	H-2	MA-1	3·8'		3·0'			
	MA-1	SIGNAL HEAD	10·0'		20·0'	218·9'	419·3'	

Final Measurement: 419.3'

Measured By: EAL & CR 6/26/12
Calculated By: EAL 6/26/12
Checked By: CR 6/26/12

PIPE CULVERT

ITEM	DESCRIPTION	STA.	DATE INST.	STAKED LENGTH	MEASURED LENGTH	PAY LENGTH
542A0235	P CUL CL A 130	10+50	7/9/12	31.0′	31.2′	31.0′ √
"	"	11+90	"	27.0′	28.3′	27.0′ √
"	"	13+24	7/10/12	50.0′	49.3′	49.3′ √
542A0241	P CUL CL A 136	14+18	"	24.0′	24.0′	24.0′ √
542A0247	P CUL CL A 142	15+95	7/11/12	112.0′ *	112.7′	112.0′ √
542A0235	P CUL CL A 130	18+02	"	21.0′	21.0′	21.0′ √

* PLAN LENGTH OF 100.0′ IS IN ERROR.

SUBCONTRACTOR: ROGERS CONSTRUCTION

WEATHER:

7/9/12	SUNNY, 79°
7/10/12	SUNNY, 82°
7/11/12	PARTLY CLOUDY, 75°

ALL FROM AMER. PIPE CO.
(APPROVED LIST & MARK)

TOTAL PAY LENGTHS:

542A0235	128.3′ √
542A0241	24.0′ √
542A0247	112.0′ √

STAKED LENGTH CHECKED BY: MD & VC 7/6/12

Measured By:	MD & VC	7/11/12
Calculated By:	MD	7/11/12
Checked By:	VMC	7/11/12

February 27, 2012

County
Section
Route
Contract No.

Don Doe, Superintendent
ACME Construction
1200 North Easy Street
Anyplace, IL

Dear Mr. Doe:

As specified in Article 512.16 of the Standard Specifications for Road and Bridge Construction, you are hereby being provided this itemized list of authorized lengths of metal pile shells to furnish for the structure for the above route and section.

It has been determined from the test piles driven on February 20, 2012 that the following lengths should be furnished:

E Abut	23 pile @ 24’	=	552 lin. ft.
Pier 1	32 pile @ 30’	=	960 lin. ft.
W Abut	23 pile @ 36’	=	828 lin. ft.

Very Truly Yours,

John Smith

John Smith
District Engineer

Note:
Final documentation for FURNISHING PILES consists of a copy of the itemized list which was given to the Contractor and field measurements of the delivered piling.

DATE: TUESDAY 6/26/12

WEATHER: MOSTLY SUNNY, 60° AM

PARTLY CLOUDY, 76° PM

CONTRACTOR: NEWMARK (7 AM - 3:30 PM)

PAY ITEMS:

51200956 FURN METAL PILE SHELLS, 12" x 0.179"

51202305 DRIVING PILES

CREW: 1 FOREMAN, 4 CARPENTERS,

2 OPERATORS

EQUIPMENT: 1 CRANE (LINK BELT LS 138H II)

1 HAMMER APE D19-42

4190 LB RAM

E_{MAX} = 47 K · FT @ H = 11.25'

E_{MIN} = 23 K · FT @ H = 5.5'

SINGLE ACTING HAMMER

NOMINAL REQ'D BEARING: 256 KIPS

NUMBER REQ'D: 7, INCLUDING TEST PILE

FURNISHED LENGTH: 50' (SEE LETTER 6/12/12)

NOMINAL DRIVEN BEARING:

$$R_{NDB} = \frac{6.6 F_{eff} E \ln(10 N_b)}{1000}$$

Measured By: EA & ML 6/26/12

Calculated By: EA 6/26/12

Checked By: MSL 6/26/12

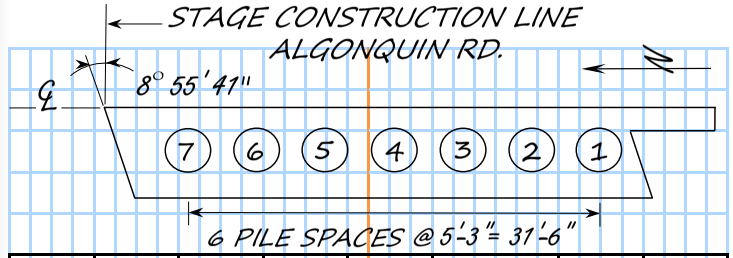

HEAT NO.	PILE NO.	FURN. LEN.	DEL. LEN.	CUT OFF	DRIVEN LEN.	BLOW /IN.	FINAL E K · FT
615203	1	50.0'	50.02'	1.92'	48.10' √	3.6	23.0
615203	2	50.0'	51.12'	8.08'	43.04' √	2.7	25.1
615203	3	50.0'	50.00'	4.92'	45.08' √	1.7	29.3
615203	4	50.0'	50.03'	6.00'	44.03' √	2.1	27.2
615203	5	50.0'	50.08'	5.33'	44.75' √	2.7	25.1
168847	6	50.0'	50.04'	3.42'	46.62' √	2.1	27.1
	7	TEST PILE					
		300.0' √			271.62" √		

PAY: 51200956 → 300.00' √

51202305 → 271.62' √

PILE BEARING ACCEPTANCE TABLE								
H	5.5	6.0	6.5	7.0	7.5	8.0	8.5	FT.
E	23.0**	25.1	27.2	29.3	31.4	33.5	35.6	K · FT
N_b	3.6	2.7	2.1	1.7	1.4	1.2	1.0*	BLOWS/IN

* Controlled by IDOT Spec.
** Controlled by hammer limits.

PG. 23

Illinois Department of Transportation

Test Pile Driving Record

Structure Number 016-2861 Date Driving Started 6/21/2012 Date Completed 6/22/2012 Sheet 1 of 1

Abutment/Pier No. East Abut. (Stage 1) Calculated by RMW Route FAP 343

Pile Type & Size Metal Shell 12" dia w/.179" walls Checked by WMK Section 70D-Y-B-R & 70HB-R-1

Nominal Required Bearing 372 kips Estimated Plan Length 69 ft. County COOK

Pile Cutoff Elevation 873.77 ft. Authorized Furnished Length 78 ft. Contract 62897

Ground Surface Elev. At Pile While Driving 840.23 ft.* Closest Boring(s) B-1 & sb-5 Driven Bearing Verification Gates

Hammer Make & Model Delmag D30-32 Hammer Cushion Material & Thickness Conbest , 2" thick

Max. Operating Energy 55,898 ft.-lbs. Min. Operating Energy 25,383 ft.-lbs. Pile Helmet Weight 4250 lbs.

Tip Elevation (Feet)	Distance Below Cut Off	Blows Per (Inch)	Hammer Energy Developed	Nominal Driven Bearing		Tip Elevation (Feet)	Distance Below Cut Off	Blows Per (Inch)	Hammer Energy Developed	Nominal Driven Bearing
840.23	31.54					811.23	61.54	1.1	36400	248
839.23	32.54					810.23	62.54	1.1	34125	237
838.23	33.54					809.23	63.54	1.0	31850	212
837.23	34.54					808.23	64.54	0.9	36400	219
836.23	35.54					807.23	65.54	1.1	36400	248
835.23	36.54					806.23	66.54	1.2	40650	282
834.23	37.54	<0.5	<25383			805.23	67.54	1.1	38675	258
833.23	38.54	<0.5	<25383			804.23	68.54	1.3	40950	294
832.23	39.54	<0.5	<25383			803.23	69.54	1.3	40950	294
831.23	40.54	<0.5	<25383			802.23	70.54	1.3	47775	326
830.23	41.54	<0.5	<25383			801.23	71.54	1.5	45500	339
829.23	42.54	<0.5	<25383			800.23	72.54	2.5	45500	422
828.23	43.54	<0.5	<25383			799.23	73.54	2.2	47775	413
827.23	44.54	<0.5	<25383			798.23	75.54	2.5	43225	409
826.23	45.54	0.5	27300	102		797.23	76.54	2.5	43225	409
825.23	46.54	0.5	27300	102		796.23	77.54	2.5	45500	422
824.23	47.54	0.5	31850	118						
823.23	48.54	0.7	27300	144						
822.23	49.54	0.7	27300	144						
821.23	50.54	0.7	27300	144						
820.23	51.54	0.6	27300	125						
819.23	52.54	0.6	31850	143						
818.23	53.54	0.8	29575	172						
817.23	55.54	1	29575	201						
816.23	56.54	1	27300	189						
815.23	57.54	0.5	31850	118						
814.23	58.54	0.5	31850	118						
813.23	59.54	0.5	34125	126						
812.23	60.54	0.8	34125	192						

Driving Observations and Comments: Hammer would not fire until 835.23, Could not Read Energy until elevation 825.23

*reflects being driven from bottom of plan specified precored hole elevation

min. test pile driven bearing = 372kips X 1.10 = 409 kips

First consistant Bearing around 73 ft ---- order ~ 78ft. since boring st-5 shows stiffer soil at deeper elevation.

cc: Bureau of Bridges and Structures

Printed 8/15/13 BBS 757 (Rev. 01/21/10)

Illinois Department of Transportation

Production Pile Driving Data

Structure Number 016-2861 | Date Driving Started 10/19/2012 | Date Completed 10/22/2012 | Sheet 1 of 1

Abutment/Pier No. East Abut. (Stage 1) | Calculated by RMW | Route FAP 343

Pile Type & Size Metal Shell 12" dia w/.179" walls | Checked by WMK | Section 70D-Y-B-R & 70HB-R-1

Nominal Required Bearing 372 kips | Estimated Plan Length 69 ft. | County COOK

Pile Cutoff Elevation 873.77 ft. | Authorized Furnished Length 78 ft. | Contract 62897

Ground Surface Elev. At Pile While Driving 840.23 ft.* | Closest Boring(s) B-1 & sb-5 | Driven Bearing Verification Gates

Hammer Make & Model Delmag D30-32 | Hammer Cushion Material & Thickness Conbest , 2" thick

Max. Operating Energy 55,898 ft.-lbs. | Min. Operating Energy 25,383 ft.-lbs. | Pile Helmet Weight 4250 lbs.

As driven pile layout sketch with piles numbered, north arrow included, and any significant deviations from plan locations noted

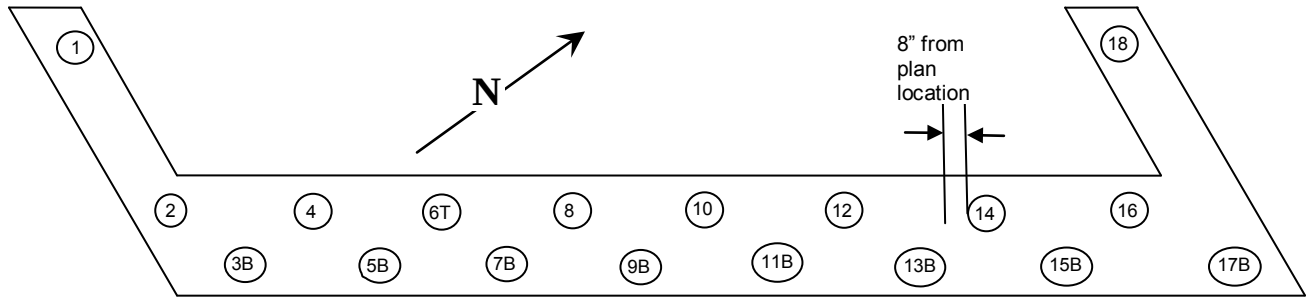

Indicate (B) at battered piles and (T) at test piles

Pile No.	Delivered Length (Feet)	Added Splice Length	Final Cutoff Length	Paid Driven Length	Paid Furnished Length	Blows Per (Inch)	Hammer Energy Developed	Nominal Driven Bearing	Driving Observations & Comments
1	81.8	0	3	78.8	78.8	2	43225	373	82 ft piles delivered as two 41 ft. sections
2	81.8	0	10.5	71.3	78	2.5	38675	381	
3B	82	0	5	77	78	3	34125	378	
4	82	0	4	78	78	2	43225	373	Bend in Pile 4 occurred 10' prior to bearing,
5B	82	0	5	80	80	2.4	38675	375	cut out bend and re-splied pile per BBS
6T	-----	-----	------	----	------	2.5	45500	422	Test pile driven on 6/22/07
7B	82.1	0	6	76.1	78	3.1	36400	398	
8	82.1	0	6	76.1	78	3.5	36400	416	
9B	82.2	0	5	77.2	78	4	36400	435	
10	78	0	1	76.6	78	2.5	38675	381	78 ft. long piles were composed of 20+38+20
11B	78.1	0	1.5	76.1	78	2	43225	373	
12	78.1	0	2	76.1	78	2.4	38675	375	
13B	78.1	10.5**	6	82.6	78	3	34125	378	
14	78.2	5**	1.5	81.7	78	2.5	38675	381	Pile hit something at 12' below precore and
15B	78	10	5.8	82.2	88	3.5	34125	399	moved out of 6" tolerence (ok per BBS)
16	78.1	10	5.8	82.2	88	3	36400	393	
17B	78.1	10	5.9	82.1	88	3.1	34125	382	
18	78.1	10	5.2	82.9	88	3.4	31850	378	
									*elevation reflects +/- 30ft. precore specified
									**Not paid as furnished since obtained from Cut
									off sections from piles 2 and 3B

cc: Bureau of Bridges and Structures

BBS 2184 (Rev. 01/21/10)

9-5-07
40600100
BIT MATLS (PRIME COAT)
STA 1 + 20
to 23 + 06

Contract 97311

This is an example of the documentation requirement for bituminous materials prime coat items paid on a gallon basis.

This adding machine tape is to be securely bound around the truck ticket(s) for each pay item for each day.

MACLAIR ASPHALT SALES, LLC
PLANT AND OFFICE
6303 COLLINSVILLE ROAD
COLLINSVILLE, ILLINOIS 62234
PHONE: (618) 271-7470 FAX: (618) 271-0830

SOLD TO: KEELEY & SONS
713
Job: 713
PARIS AVENUE
CAHOKIA, IL.
CONTRACT NO. 97311
TICKET NO. E 3
9/5/07

Acct. No.	Truck	Tons	Product	Product Description
3600	EJ16	2.29	913	PRIME RC-70

Loads: 1 Accum. Amount: 2.29 TONS

GROSS: 13.00 TN Manual Wt.
TARE: 10.71 TN Manual Wt.
NET: 2.29 TN

DAWN B.

583 gals.

Received By: _____
WARNING – HOT BITUMINOUS MIX/HAZARDOUS MATERIAL-MSD SHEET AVAILABLE

STRAIGHT BILL OF LADING
DELIVERY TIME
Shipper's No. 24645
CARRIER E.J. Dougherty
RECEIVED, subject to, the classifications and tariffs in effect on the date of the issue of this bill of lading.
at Hazelwood, Missouri 20 07 CONSIGNOR or from Spirit Asphalt Incorporated

The property described below, in apparent good order except as noted (contents and condition of contents of packages unknown) marked, consigned, and destined as indicated below, which said carrier (the word carrier being understood throughout this contract as meaning any person or corporation in possession of the property under the contract) agrees to carry to its usual place of delivery at said destination, if on its route, otherwise to deliver to another carrier on the route to said destination. It is mutually agreed, as to each carrier of all or any of said property over all or any portion of said route to destination, and as to each party at any time interested in all or any said property, that every service to be performed hereunder shall be subject to all the terms and conditions of the Uniform Domestic Straight Bill of Lading set forth (1) in Uniform Freight Classifications in effect on the date hereof, if this is a rail or rail-water shipment, or (2) in the applicable motor carrier classification or tariff if this is a motor carrier shipment.
Shipper hereby certifies that he is familiar with all the terms and conditions of the said bill of lading, including those on the back thereof, set forth in the classification or tariff which governs the transportation of this shipment, and the said terms and conditions are hereby agreed to by the shipper and accepted for himself and his assigns.

Consigned to E.J. Dougherty Oil
1501 Lincoln Ave
E. St. Louis, IL
62204

"FOR CHEMICAL EMERGENCY, SPILL, LEAK, FIRE, EXPOSURE, OR ACCIDENT CALL CHEMTREC, 1/800-424-9300 DAY OR NIGHT."

Destination Same

WEIGHT LBS INITIAL WEIGHT
11:14 AM 06/08/07
TRUCK ID: 225-178
WEIGHT IN: 30400 lb GROSS

12:01 PM 06/08/07 TARE
TRUCK ID: 225-178
Gross Wt: 77680 lb
Tare Wt: 30400 lb NET
Net Wt: 47280 lb

1 T/L

Delivering Carrier: EJ Dougherty
Customer P.O.:
Description
Product RC-70
Tank No. 45 Gravity 0.943
Lab No. RR 7015 Tank Temp. 160
Gallons 6023 Seal No.
Project No.
Keeley + Sons
RC-70 Job 713
Contract 97311

FREIGHT CHARGES
Subject to Section 7 of conditions of applicable bill of lading. If this shipment is to be delivered to the buyer without recourse on the seller, the seller shall sign the following statement:
The carrier shall not make delivery of this shipment without payment of freight and all other lawful charges.
Per
(Signature of Seller)
If charges are to be prepaid write or stamp here, "To be Prepaid."
Received $_____ to apply in prepayment of the charges on the property described hereon.
Agent or Cashier
Per
(The signature here acknowledges only the amounts prepaid.)

Calc by: MAN 9-5-07
Check by: JN 9-7-07

0. C

13.00 -
10.71 =
2.29 *
tons

0. C

2.29 x
2000 =
4580.0 *
lbs.

0. C

4580.0 ÷
8.328 ÷
0.943 =
583 *
gallons

Pay 583 Gallons

Evidence of Material Inspection : List & Bill of Lading

Illinois Department of Transportation

Weekly Trainee Report

Contractor ACME CONSTRUCTION CO.

Report No. 7 Week Ending 06-29-12

County:

Section:

Route:

District:

Contract:

Job No.:

Project:

JOB STAMP

(1) Trainee Name and Individual Identification Number	(2) Ethnic Group	(3) FHWA	(4) IDOT MRB	(5) TPG	(6) Work Classification	(7) Status	(8) Hours and Days Worked							(9) Hours this Week	(10) Hours to Date
JUANITA SANCHEZ, 6155	H	☒	☐	☐	CM	A	8	8	0	0	10	8	4	38	253
		☐	☐	☐											
ERNEST JACKSON, 7521	B	☒	☐	☐	CA	T	8	8	0	0	8	8	4	36	247
		☐	☐	☐											
		☐	☐	☐											
		☐	☐	☐											
		☐	☐	☐											
		☐	☐	☐											
		☐	☐	☐											
		☐	☐	☐											

NOTE:
Final documentation for the pay item, TRAINEES, consists of this form completed weekly for all "Trainees" employed in accordance with the Training Special Provisions included in your contract.

I hereby certify that the hours of training listed above were given to those trainees working on the above designated project.

John Smith
Contractor's Representative

These hours were checked against the contractor's payroll in addition to visual job site inspection

Rich M. Hixon
State's Representative

Illinois Department of Transportation

Inspector's Daily Report

County

Section

Route

District

Contract No.

Job No.

Project

JOB STAMP

Date 9-24-12

Contractor or Sub. Wortman-Starwalt Inc.

Weather CLEAR 80 °

	Initial(s)	Date
Inspected by:	ALG	9-24-12
Measured by:	ALG	9-24-12
Calculated by:		
Checked by:	KPR	9-24-12

Item Code #	Fund Code (Opt.)	Item	Location	Quantity and Units	Evidence of Material Inspection (Optional)	Posted in Q Book
50500405		F&E STRUCT. STEEL	N. Tri-Level MID Bridge	3140 lbs	Fabrication Inspectors	√
					Release BBS 59	

This is: ☐ an estimated progress measurement (item no.: _____)

√ a final field measurement (item no.: 50500405)

Remarks: (e.g., instruction to Contractor, special problems, sketches with dimensions for final measurements, computations, number of persons working, hours worked) Use reverse side, if needed.

Angles weighed on approved scale at Effingham Equity.
Scale No. IL 4201 (9-1-12). See wt. ticket in str. steel file.

Note: Bill of Lading from fabricator indicates
wt of steel = 3200 lb
actual wt = 3140 lb

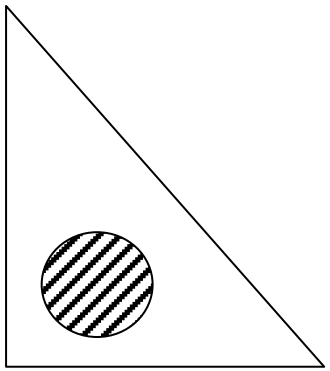

BC 628 (Rev. 9/00)

Illinois Department of Transportation

Inspector's Daily Report

County

Section

Route

District

Contract No.

Job No.

Project

JOB STAMP

Date 9-24-12

Contractor or Sub. INTERSTATE

Weather SUNNY, 70-75

	Initial(s)	Date
Inspected by:	BAB	9-24-12
Measured by:	BAB, KWN	9-24-12
Calculated by:	BAB	9-24-12
Checked by:	SM	9-24-12

Item Code #	Fund Code (Opt.)	Item	Location	Quantity and Units	Evidence of Material Inspection (Optional)	Posted in Q Book
25000400		NITROGEN FERT NUTR	ENTIRE JOB (7.0 acres)	700 LBS	SEE GUARANTEED ANALYSIS FROM BAG	√
					IN SEEDING FILE	
25000500		PHOSPHORUS FERT NUTR	"	420 LBS	"	√
25000600		POTASSIUM FERT NUTR	"	280 LBS	"	√

This is: ☐ an estimated progress measurement (item no.: _____)

√ a final field measurement (item no.: 25000400, 25000500, 25000600)

Remarks: (e.g., instruction to Contractor, special problems, sketches with dimensions for final measurements, computations, number of persons working, hours worked) Use reverse side, if needed.

Plans Require: N=100 lb/acre Phos = 60 lb/acre Pot = 40 lb/acre

Contractor delivered & used 140 bags of 10-6-4 @ 50 lb ea.

Quantity: Nit = 140 bags × 50 lbs × 10% = 700 lbs

Phos = 140 bags × 50 lbs × 6% = 420 lbs

Pot = 140 bags × 50 lbs × 4 % = 280 lbs

Fertilizer bags were counted & destroyed by Resident.

BC 628 (Rev. 8/04)

10-14-12 Clear, 60's ACE Construction

PAVEMENT PATCHING, 9"

Patch #	44200108 TYPE 2	44200112 TYPE 3	CALCULATIONS
8 1241+02		16.7	$\frac{(12.7' + 12.3')}{2} \times 12.0 \times 1/9$ =16.7 S.Y.
9 1241+98	6.7		5.0 × 12.0 × 1/9 = 6.7 S.Y.
10 1246+00		29.4	18.4 × 12.0 × 1/9 = 24.5 S.Y. Patch Depth Increase $= \frac{(14'' - 9'')}{9''} = 56\%$ ∴ Increase Qty. by 20% ∴ Pay = 24.5 × 1.20 = 29.4 S.Y.
PAGE TOTALS	6.7 S.Y.	46.1 S.Y.	

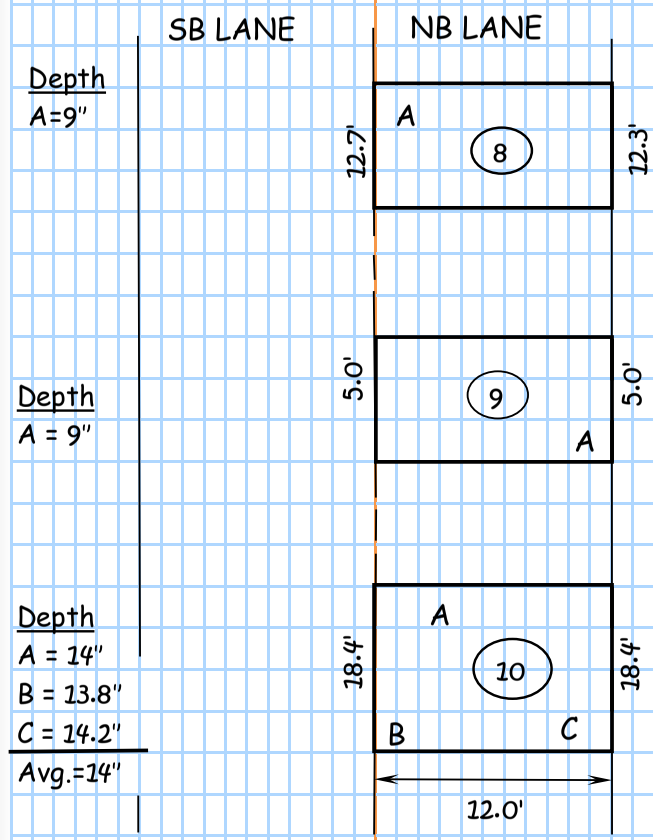

Evidence of Mat'l Insp: Plant Report, Tickets & Test

Meas. By: VC, MD 10/14/12
Calc. By: VC 10/14/12
Chkd. By: MD 10/15/12

Illinois Department of Transportation

Inspector's Daily Report

County

Section

Route

District

Contract No.

Job No.

Project

JOB STAMP

Date 7-27-12

Contractor or Sub. ACME Construction

Weather Clear, 75°

	Initial(s)	Date
Inspected by:	RG, MF	7-27-12
Measured by:	RG, MF	7-27-12
Calculated by:	RG	7-27-12
Checked by:	JR	7-27-12

Item Code #	Fund Code (Opt.)	Item	Location	Quantity and Units	Evidence of Material Inspection (Optional)	Posted in Q Book
35400400		PCC BASE CSE W 9	LT 0+25 to 23+50		Plant Report & Tickets & Test	
			RT 0+25 to 10+20	1106.7 SY		

NOTE:
Article 109.01 states that the pay width for pavement, base course, etc. shall be the exact horizontal dimension shown on the plans or ordered in writing by the Engineer.

This is: ☐ an estimated progress measurement (item no.: _____)

√ a final field measurement (item no.: 35400400)

Remarks: (e.g., instruction to Contractor, special problems, sketches with dimensions for final measurements, computations, number of persons working, hours worked) Use reverse side, if needed.

See Field Book #3
Pg. 12-14 for field
width and
depth checks

LT 0+25 to 23+50
2325' X 3' X 1/9 = 775.0 SY
RT 0+25 to 10+20
995' X 3' X 1/9 = 331.7 SY

Total = 1106.7 SY

BC 628 (Rev. 8/04)

Illinois Department of Transportation

Inspector's Daily Report

County

Section

Route

District

Contract No.

Job No.

Project

JOB STAMP

Date July 9, 2012

Contractor or Sub. ACME Const. Co.

Weather Cloudy, 83°

	Initial(s)	Date
Inspected by:	BAB	7-9-12
Measured by:	BAB & AG	7-9-12
Calculated by:	BAB	7-9-12
Checked by:	SVJ	7-9-12

Item Code #	Fund Code (Opt.)	Item	Location	Quantity and Units	Evidence of Material Inspection	Posted in Q Book
51100100		Slope wall 4"	South Abut	74.6 sy	Plant Rpt. & Tickets & Test	√

This is: ☐ an estimated progress measurement (item no.: _____)

√ a final field measurement (item no.: 51100100)

Remarks: (e.g., instruction to Contractor, special problems, sketches with dimensions for final measurements, computations, number of persons working, hours worked) Use reverse side, if needed.

All measurements on upper slope surface of wall

$$\left(\frac{19.6 + 19.8}{2}\right)(34.1) \div 9 \ \frac{sf}{sy} = 74.6 \ sy$$

See FB #4, p.12 for depth checks

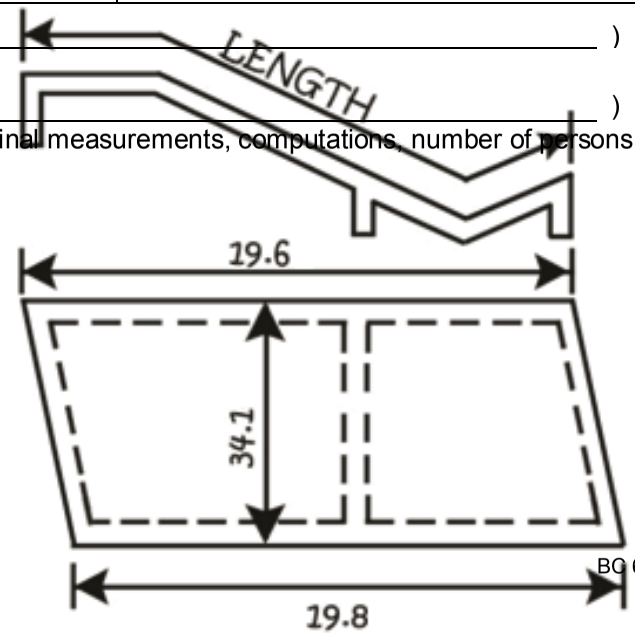

BC 628 (Rev. 8/04)

F-67

Illinois Department of Transportation

Inspector's Daily Report

County

Section

Route

District

Contract No.

Job No.

Project

JOB STAMP

Date 10-8-12

Contractor or Sub. GREENSIDE UP

Weather SUNNY 79°

	Initial(s)	Date
Inspected by:	JAJ	10-8-12
Measured by:	JAJ	10-8-12
Calculated by:	JAJ	10-8-12
Checked by:	EF	10-9-12

Item Code #	Fund Code (Opt.)	Item	Location	Quantity and Units	Evidence of Material Inspection (Optional)	Posted in Q Book
25200200	W36U	Supplemental	STA 461+00 TO	24.5 Units	Potable Source- Danville	√
		Watering	493+00 RT		Municipal water supply	

This is: ☐ an estimated progress measurement (item no.: _____)

√ a final field measurement (item no.: 25200200)

Remarks: (e.g., instruction to Contractor, special problems, sketches with dimensions for final measurements, computations, number of persons working, hours worked) Use reverse side, if needed.

Per Art. 252.08, One initial watering of 5 gal/sy and 15 additional waterings at 3 gal/sy were applied, began supplemental watering today at 3 gal/sy over 8167 sy

Truck Plate → 3,500 Gallons/Load; 7 Loads Utilized Today

3500 gal/load x 7 loads = 24,500 Gal ÷ 1000 Gal/Unit = 24.5 Units

BC 628 (Rev. 8/04)

Illinois Department of Transportation

Inspector's Daily Report

County

Section

Route

District

Contract No.

Job No.

Project

JOB STAMP

Date 5-12-14

Contractor or Sub. GREENSIDE UP

Weather Sunny, 91°

	Initial(s)	Date
Inspected by:	GJ	5-12-14
Measured by:	GJ	5-12-14
Calculated by:	GJ	5-12-14
Checked by:	EG	5-15-14

Item Code #	Fund Code (Opt.)	Item	Location	Quantity and Units	Evidence of Material Inspection (Optional)	Posted in Q Book
25301800	W36U	Seedlings	STA 26+50 LT to	23.5 Units	Letter Of Certification And	DQ#
			26+59 LT		RE Vis (From Rhimes	150
					Nursery)	

This is: ☐ an estimated progress measurement (item no.: _____)

☒ a final field measurement (item no.: 25301800)

Remarks: (e.g., instruction to Contractor, special problems, sketches with dimensions for final measurements, computations, number of persons working, hours worked) Use reverse side, if needed.

Seedlings Tied In Bunches Of 30 Plants
Counted 87 Bunches

$$\text{Final QTY} = \frac{30 \text{ PLANTS/BUNCH} \times 87 \text{ BUNCHES}}{100 \text{ PLANTS/UNIT}} = 26.1 \text{ Units}$$

Pay 90% for planting on this date: 26.1 X 0.90 = 23.5 Units

NOTE: Per **2014 Suppl. Spec.** for Article 253.17 the remaining 10% of the pay quantity will be paid after the period of establishment (253.14) or upon receipt of performance bond.

BC 628 (Rev. 8/04)

TREE REMOVAL

LOCATION	CIRCUM MEAS.	20100110 6 - 15	20100210 > 15	DATE REMOVED
613+65	53"		16.9	8-20-12
614+10	21	6.7		"
614+28	28	8.9		"
614+80	38	12.1		"
616+25	58		18.5	"
616+38	30	9.5		"
616+73	48		15.3	"
617+28	74		23.6	8-21-12
617+29	23	7.3		"
622+91	40	12.7		"
623+52	68	~~21.6~~	21.6	"
624+21	24	7.6		"
		64.8	95.9	
		UNIT DIA.	UNIT DIA.	

NOTE: Must note, "Tree tape used" if a direct reading tree tape is used to determine the tree diameter.

SUB-CONTRACTOR: R & W TREE SERVICE

DATE	6-15	>15	INSP. BY	WEATHER
8/20/12	37.2	50.7	EAL	SUNNY, 76°
8/21/12	27.6	45.2	EAL	SUNNY, 80°

Example conversion calculation from circumference measurement in inches to unit diameter:

STA 613+65: 53" ÷ 3.1416 = 16.9 unit diameter

Measured By: MRL 8/16/12
Calculated By: MRL 8/21/12
Checked By: VMC 8/21/12