Manual for

Fabrication of Precast Prestressed Concrete Products

State of Illinois
Illinois Department of Transportation

Illinois Department of Transportation

0034-20, 03/20, web

Manual for Fabrication of Precast Prestressed Concrete Products

Prepared and Published by
Illinois Department of Transportation
Bureau of Materials

Springfield, Illinois

April 1, 2020

DOCUMENT CONTROL

The Manual for Fabrication of Precast Prestressed Concrete Products is reviewed during use for adequacy and updated as necessary by the Concrete Products Engineer of the Central Bureau of Materials. The approval process for changes to this manual is conducted in accordance with the procedures outlined in the Illinois Department of Transportation's, Document Management Manual.

Electronic

Portable Document Format (PDF) has been selected as the primary distribution format. The official version of the manual is available on the Illinois Department of Transportation website and the Policy and Research Center Library site on InsideIDOT.

Hard Copy

This manual is no longer distributed in hard copy format. Users who choose to print a copy of the manual are responsible for ensuring use of the most current version.

Archived Copies

Archived versions of this manual are available to examine by contacting DOT.PolicyResearchCenter@illinois.gov.

REVISION LOG

Revision Date	Description	Approval
April 1, 2020	Table of Contents: added reference to appendices C thru E	James Krstulovich
April 1, 2020	Introduction: added references to Appendix E for shop drawing requirements and submittal	James Krstulovich
April 1, 2020	Section 1.2.4, Note 1: revised strength sampling frequency	James Krstulovich
April 1, 2020	Section 2.2.9 (3): added guidance for appropriate values of A_s (cross-sectional area of steel in one prestressing strand) and E_s (modulus of elasticity of strand).	James Krstulovich
April 1, 2020	Section 3.2.1: corrected reference to Article 508.04 and 508.06	James Krstulovich
April 1, 2020	Section 3.5.3: revised repair and remedy conditions	James Krstulovich
April 1, 2020	Section 3.5.6: revised patch repairs	James Krstulovich
April 1, 2020	Section 3.6.2: revised storage	James Krstulovich
April 1, 2020	Section 3.6.3: revised release for shipping	James Krstulovich
April 1, 2020	Section 4.1.5: corrected reference to Article 1020.05(b)(10)	James Krstulovich
April 1, 2020	Section 4.2.2: corrected links and references regarding welded wire reinforcement	James Krstulovich
April 1, 2020	Section 4.2.3: updated references from AASHTO to ASTM standards	James Krstulovich
April 1, 2020	Appendix A: updated Table of Contents	James Krstulovich
April 1, 2020	Appendix A: revised Step 8 for both “at the Plant” and “at the Jobsite” remedy proposal procedures	James Krstulovich
April 1, 2020	Appendix A: replaced WWR Placement Tolerance figures	James Krstulovich
April 1, 2020	Appendix A: added new Alternate Rebar figure	James Krstulovich
April 1, 2020	Appendix A: added two new 3-page Alternate Bottom Splitting details.	James Krstulovich
April 1, 2020	Added Appendices C, D, and E.	James Krstulovich
April 1, 2020	Corrected references to Standard Specifications and Qualified Products Lists throughout.	James Krstulovich

Table of Contents

INTRODUCTION 1

SAFETY 4

DIVISION 1 – QUALITY CONTROL/QUALITY ASSURANCE 5

SECTION 1.1 – EQUIPMENT 5
1.1.1 General 5
1.1.2 Aggregate Testing Equipment 5
1.1.3 Tensioning 6
1.1.4 Concrete Testing Equipment 6
1.1.5 Temperature Recording and Measuring Devices 6
1.1.6 Concrete Plant and Delivery Truck Equipment 7
1.1.7 Miscellaneous Equipment 7

SECTION 1.2 – QUALITY CONTROL 8
1.2.1 General 8
1.2.2 Quality System Manual 8
1.2.3 Qualifications 9
1.2.4 Quality Control Testing Requirements 13
Table Maximum Allowable Dimensional Tolerances for Deck Beams 16
Table Maximum Allowable Dimensional Tolerances for I-Beams, Bulb T-Beams, and IL-Beams 17

SECTION 1.3 – QUALITY ASSURANCE 18
1.3.1 General 18
1.3.2 Quality Assurance Requirements 18

SECTION 1.4 – ACCEPTANCE 20
1.4.1 General 20

DIVISION 2 – PRESTRESSING 22

SECTION 2.1 – STRESSING REQUIREMENTS 22
2.1.1 General 22
2.1.2 Systems of Jacking and Tensioning 22
2.1.3 Gauging Systems 22
2.1.4 Safety - Tensioning and Release of Strands 23

SECTION 2.2 – PRETENSIONING 25
2.2.1 General 25
2.2.2 Sequence of Stringing and Tensioning Strands 26
2.2.3 Preload 27
2.2.4 Final Load - Single Strand Tensioning 27
2.2.5 Final Load - Multi-Strand Tensioning 28
2.2.6 Draped Strands 28
2.2.7 Elongation Measurements 29
2.2.8 Elongation and Tensioning Corrections, and Maximum Strand Over-Pull 29
2.2.9 Methods, Nomenclature & Formulas for Computing Elongations, Tensioning Forces, Corrections and Calibrations 36

SECTION 2.3 – RELEASE OF STRANDS 43
2.3.1 General 43
2.3.2 Release Pattern 44

DIVISION 3 – CONCRETE 45

SECTION 3.1 – CONCRETE MIXTURES 45
3.1.1 Concrete Mix Design 45
3.1.2 Concrete Plant and Delivery Truck Operations 46
3.1.3 Admixtures 46

SECTION 3.2 – PLACING CONCRETE 47
3.2.1 General 47
3.2.2 Weather Conditions 48
3.2.3 Vibration of Concrete 49
3.2.3.1 Cold Joint in Hardened Concrete 50
3.2.3.2 Fold From Self-Consolidating Concrete 50
3.2.3.3 Mix Foaming 50
3.2.4 Deck Beams 50
3.2.5 Features Common to Deck Beams with Void Tubes 51
3.2.6 Specific Features of Deck Beams with Cylindrical Void Tubes 53
3.2.7 Specific Features of Deck Beams with Rectangular Void Tubes 53
3.2.8 I-Beams, Bulb T-Beams, and IL-Beams 54

SECTION 3.3 – CURING CONCRETE 55
3.3.1 General 55
3.3.2 Wet Curing 55
3.3.3 Match Curing 55
3.3.4 Accelerated or Cold Weather Curing 56

SECTION 3.4 – FINISHING AND SEALING 60
3.4.1 Finishing 60
3.4.2 Sealing 61

SECTION 3.5 – INSPECTION OF COMPLETED PRODUCTS 63
3.5.1 General 63
3.5.2 Dimensions 63
3.5.3 Honeycomb, Voids, Chips, Spalls, and Other Damage 65
3.5.4 Cracks 66
3.5.5 Miscellaneous Damage 69
3.5.5.1 Depressions 69
3.5.5.2 Laminations 69
3.5.5.3 Weak Surface 70
3.5.6 Repairs 70

SECTION 3.6 – HANDLING, STORAGE, AND TRANSPORTATION OF BEAMS 74
3.6.1 General 74
3.6.2 Storage 74
3.6.2.1 I-Beams, Bulb T-Beams, and IL-Beams 74
3.6.2.2 Deck Beams 74
3.6.2.3 Bridge Approach Slab Beams 75
3.6.2.4 Channel Beams 75
3.6.2.5 Stacking 75
3.6.3 Release for Shipment 75
3.6.4 Transportation 76
3.6.4.1 I-Beams, Bulb T-Beams, and IL-Beams 76
3.6.4.2 Deck Beams 77

DIVISION 4 – MATERIALS 78

SECTION 4.1 – CONCRETE MATERIALS 78
4.1.1 Cement 78
4.1.2 Finely Divided Minerals 78
4.1.3 Aggregates 79
4.1.4 Water 79
4.1.5 Admixtures 80

SECTION 4.2 – REINFORCING STEEL 81
4.2.1 Prestressing Steel Strand 81
4.2.2 Reinforcement 81
4.2.3 Steel Wire or Straight Rod 82

SECTION 4.3 – MISCELLANEOUS ACCESSORIES 83
4.3.1 General 83

SECTION 4.4 – REPORTS AND RECORDS 84
4.4.1 General 84
4.4.2 Recordkeeping Procedure 84
4.4.3 Materials Integrated System for Test Information and Communication (MISTIC) 85

DIVISION 5 – WELDING 86

SECTION 5.1 – WELDING 86
5.1.1 General 86
5.1.2 Procedure Qualification 86
5.1.3 Welder Qualification 87

APPENDIX A ..... A – 1

APPENDIX B ..... B – 1

APPENDIX C ..... C – 1

APPENDIX D ..... D – 1

APPENDIX E ..... E – 1

This Page Reserved

MANUAL FOR FABRICATION OF PRECAST PRESTRESSED CONCRETE PRODUCTS

(Revised January 1, 2017)

INTRODUCTION

This manual is the result of experience gained in the inspection of precast prestressed concrete products. It covers designs currently used in some detail and outlines practices and procedures that have been found to produce satisfactory results. It is not intended to preclude the development and approval of other practices and procedures that will produce equally satisfactory or superior results. In the event that the Producer proposes methods that differ from those prescribed herein, the Producer shall inform the Department immediately.

The manual is intended as a detailed specification for Producers and Inspectors in performing their work efficiently. Articles 504.06 and 639.06 of the Standard Specifications state that prestressed members "be fabricated according to the Manual for Fabrication of Precast Prestressed Concrete Products in effect on the date of invitation for bids."

The Producer shall be thoroughly familiar with the plans, specifications, and details of procedures as set forth herein. Before fabrication of the beams, including the tensioning of the strands, the Producer shall review the plans, specifications, and provisions of this manual, with the objective of avoiding any misunderstanding during the progress of the work. The Producer shall see that the superintendent, foreman, and all other personnel responsible for the fabrication, condition, and handling of the beams, until delivery to the job, are fully informed as to all the prescribed requirements.

The Producer shall obtain the complete bridge portion of the contract plans with special provisions and shall fully check and verify before submittal to the Department that shop drawings are in compliance with the contract plans. Shop drawings shall have a signature block indicating "drawn by" and "reviewed by". The drawer and reviewer shall be separate people. No casting shall start unless the Producer has a set of shop drawings approved by the Department or has written or e-mail verification of approval. Shop drawings shall be according to Article 1042.03(b) and Appendix E. A set of approved shop drawings shall be provided to the Inspector. A set of contract plans with special provisions shall be made available to the Inspector upon request.

When submitting shop drawings (see Appendix E), the Producer shall describe on the shop drawings all substitutions/modifications, strand release pattern (see Section 2.3.2), Contractor and/or Producer inserts (see Section 3.5.2), locations of air vents (see Section 3.2.5 (4)), locations of void tube drains (see Section 3.2.5 (5)), casting length of beams (see Section 1.2.4), and any other changes from the contract plans. Substitutions or modifications not permitted by Appendix A of this manual require approval from the Bureau of Bridges and Structures (BBS) due to the potential for unforeseen problems. For example, substituting a reinforcement bar with one that is larger than that called for on the contract plans can have unintended consequences such as added congestion, clearance problems, tolerance problems, and problems with bends and/or lap lengths. In addition, an unanticipated substitution/modification may change the design intent of the Engineer of Record (EOR). Altering the structural design without concurrence of the EOR effectively relieves the EOR of liability.

The Producer shall notify the Department at least 48-hours prior to the start of production, except when the Central Bureau of Materials has quality assurance responsibility for the Producer (see Section 1.3.1), in which case the notification shall be two weeks prior to the start of production.

Tensioning of strands, concrete placement operations, and loading of beams for transportation shall not extend beyond daylight hours. If the Producer proposes a lighting system for night operations, the system shall have prior approval of the Inspector.

All plants fabricating prestressed concrete products for state funded projects shall be inspected by the Department (District and/or Central Bureau of Materials) and shall meet Department Specifications. All plants fabricating prestressed concrete products for state funded projects shall also be certified under the cooperative "Precast/Prestressed Concrete Institute (PCI) and Government Agency Certification Program" (PCI Plant Certification Program). (Note: A Producer shall meet these two requirements even if they assign the entire project to another Producer who also meets these requirements. A Producer whose Quality System Manual (QSM) is approved by PCI, has passed Departmental inspection, and is awaiting the PCI Audit, will be considered in compliance. In addition, Producers who only fabricate beams with straight strands may assign all or parts of a project to Producers who fabricate beams with draped strands.) Producers who manufacture only deck beams (straight strands) shall be PCI Certified as PCI B3-IL. Producers who manufacture beams that may have draped strands (I-beams, Bulb T-beams, and IL- beams) shall be PCI Certified as PCI B4-IL. A Producer who is Certified as PCI B4-IL is automatically Certified as PCI B3-IL. PCI approval of a QSM with Department review and comment is an integral part of the PCI Certification Program. A Producer's QSM shall be developed, maintained and revised as necessary according to "Preparation Guidelines for a Structural Plant Quality System Manual" (QSM-1) which is published by PCI. Appendix IL in QSM-1 shall be used in conjunction with the main body of the document to fulfill the QSM requirements of the PCI Certification Program.

To receive the B3-IL or B4-IL Certification from PCI, the Producer shall have their Quality System Manual approved by PCI and their plant audited by PCI. In addition, Producers shall provide permission to PCI to release to the Department PCI approved copies of a Producer's QSM and all PCI Audit findings related to PCI B3-IL or B4-IL Certification. The Producer shall provide evidence to the Central Bureau of Materials that this information may be released. Upon completion of a successful audit, PCI will issue the B3-IL or B4-IL Certification to the Producer. However, the Department will permit a Producer to begin manufacture of Department products after approval of the Quality System Manual by PCI and Department (District and/or Central Bureau of Materials) inspection of the Producer's plant shows that it meets Department Specifications. It is also required that the PCI approved Quality System Manual be delivered by PCI to the District responsible for the Quality Assurance inspection, Central Bureau of Materials, and the Producer before start of production. Delivery may be through electronic means or other suitable methods. At this point, a Producer will be listed by PCI on its website as either "B3-IL Pending" or "B4-IL Pending". Since it is desired by PCI to audit work being done for the Department, the Producer shall inform PCI a minimum of two weeks before work is expected to begin, so that an audit may be scheduled. Once production has started for a Department project, the Producer will have 150 calendar days from the start of production to pass the audit and obtain B3-IL or B4-IL Certification from PCI. Failure to obtain PCI B3-IL or B4-IL certification within this time frame will prevent the Producer from starting any work let after the

150 calendar days. When the Producer passes the audit, this restriction will be removed. Work let prior to expiration of the 150 calendar days may be started and completed for the Department.

PCI will make the findings of all PCI Audits related to PCI B3-IL or PCI B4-IL Certification available to the Department. This information will be submitted to the District and Central Bureau of Materials. This includes the total grade for each division and the overall total grade given to a Producer by PCI Auditors. Producers shall notify Department personnel of and permit them to attend audit "close-out" meetings with PCI Auditors when discussions pertain to PCI B3-IL or PCI B4-IL Certification. If non-conformances are found during the PCI Audit, the Producer's response to PCI will also be provided to the District and Central Bureau of Materials by PCI.

If a Producer loses its PCI B3-IL or B4-IL Certification through the audit process, the Producer will be denied the opportunity to bid/supply on the next available Department letting. This shall apply even if the Producer is reinstated by PCI before the next letting. Ongoing work may be completed for the Department. The Producer may reapply for PCI Certification according to the provisions of PCI Manual for Quality Control: Structural Precast Concrete (MNL-116) and PCI Policy Statement Section 20.0.

Products that do not meet specification requirements shall either be declared unacceptable or be rejected by the Producer. For deficiencies that are allowed by this manual to be declared unacceptable, the Producer has the option to submit a remedy proposal according to the "Procedure to Remedy an Unacceptable Prestressed Product at the Plant" (see Appendix A). Records of all "Notices of Unacceptable Products at Plant or Jobsite" (BMPR Form PS02) shall be made available to PCI Auditors during plant audits conducted by PCI and upon request at any time. For deficiencies described in this manual that require a product to be rejected, a remedy is not allowed and the product cannot be accepted for use.

The Department reserves the right to either declare unacceptable or reject products which are deficient and/or do not meet specification requirements. This right applies regardless of whether the deficiency and/or specification requirement is implied or explicitly stated.

Records of all "Inspection Feedback to Precast Prestressed Concrete Producer" (BMPR Form PS03, see Appendix A) shall be made available to PCI Auditors during plant audits conducted by PCI and upon request at any time. The Department may notify PCI at any time if there are significant ongoing concerns with quality, which may result in an audit or other action as appropriate by PCI. All correspondence with PCI should be directed to the Director of Quality Programs.

SAFETY

Producer's Responsibilities for Safety

1. The Producer's safety program shall meet the requirements of law.
2. The Producer's safety program shall take into consideration the Department's inspection activities and shall adequately protect the Inspector.
3. The Producer's ongoing operations shall not place the Inspector in an unsafe situation. For example, a policy of good housekeeping shall be maintained to prevent hazardous conditions.
4. A copy of the Producer's safety program shall be provided to the Inspector.
5. A copy of the current edition of the PCI Safety and Loss Prevention Manual (SLP-100), shall be made available to the Inspector.
6. The Producer's equipment shall have working backup alarms; however, good safety practices shall not solely depend on them.

Inspector's Responsibilities for Safety

1. Read and abide by the Department's Employee Safety Code (Departmental Order 5-1) and references 1-1 B 8 (Work Conditions), 8-5 (Equipment and Clothing); and 11-3 P (Safety Rules) in the Personnel Policy Manual (Departmental Order 3-1). When working in the proximity of moving equipment, it is a good practice to make eye contact with the equipment operator or signal in some manner to make sure the individual is aware of your presence.
2. Read and abide by the job safety analysis. It is recommended that a job safety analysis be developed for the Inspector's position.
3. Read and abide by the Producer's safety program.
4. Read and abide by Sections 2.1.4 and 2.3.1 in this manual regarding additional information on safety.
5. Be familiar with the PCI Safety and Loss Prevention Manual (SLP-100).
6. Do not perform an inspection activity which may place you in an unsafe situation, and notify the Producer of the need for corrective action.
7. Do not approve precast prestressed products when inspection is prevented because of safety.

DIVISION 1 – QUALITY CONTROL/QUALITY ASSURANCE

SECTION 1.1 – EQUIPMENT

1.1.1 General

In order to perform the inspection and testing described in this manual, the Producer shall provide the following equipment which shall be maintained in good working condition as required by the Standard Specifications for Road and Bridge Construction, the appropriate sections of ASTM or AASHTO, or as detailed by various sections of this manual.

The equipment requirements set forth in this section shall apply to the Producer's Quality Control System. They are intended to provide minimal inspection requirements and should not be considered all-inclusive.

The Producer shall provide a suitable facility for the performance of tests and measurements required and of sufficient size to properly maintain records of the production of prestressed products. The Producer shall maintain a record of equipment calibration results at the facility. The Producer shall cease production should the equipment become inoperable. The Inspector may inspect measuring and testing devices at any time to confirm both calibration and condition. If the Inspector determines that the equipment is not within the limits of dimension or calibration described in the appropriate test method, the Inspector may require that production cease until corrective action is taken.

In addition to the above, the Producer shall be required to provide a Type B field office according to Article 670.04 of the Standard Specifications and as stated herein for use by the Department during production of precast prestressed concrete products for use on Federal, State, and Local Agency projects. In addition to the requirements of Article 670.04, the Type B field office shall be furnished with a scanner that is compatible with the Inspector’s field office computer, and at a minimum is capable of creating legible electronic documents. The field office shall be available until the product has been accepted for use by the Department.

The Inspector shall be permitted unrestricted access to inspect test equipment and to observe testing procedures. The Inspector will notify the Producer in writing of deficiencies in testing equipment or procedure.

1.1.2 Aggregate Testing Equipment

In order to verify the gradation of aggregate being utilized in the manufacture of the units of prestressed concrete, the Producer shall be required to sample and perform dry gradation analyses on the fine and coarse aggregates.

The Producer shall meet the aggregate sampling and testing equipment requirements in the Department's "Required Sampling and Testing Equipment for Concrete" document, which can be found in the Manual of Test Procedures for Materials. The aggregate equipment may be for a low- or high-volume operation.

1.1.3 Tensioning

Strand tensioning shall be accomplished utilizing equipment specified in Division 2 of this manual. Calibration records and certification of the tensioning device shall be provided by the Producer. Calibrations shall be performed by an independent testing laboratory or calibration service using calibration equipment traceable to the National Institute of Standards and Technology (NIST). If the calibration necessitates that corrections should be made during actual strand tensioning for prestress product fabrication, a certified calibration curve shall be generated for the tensioning system. The calibration curve shall be a best fit linear or polynomial function as dictated by a minimum of six data points generated during the calibration procedure. Calibrations shall be performed at any time a tensioning system indicates erratic results, and in no case at intervals greater than twelve months.

1.1.4 Concrete Testing Equipment

Concrete test equipment shall be maintained and calibrated as required by the appropriate test method, and when required by the Inspector. This information shall be documented on the Department's "Calibration of Concrete Testing Equipment" forms, which can be found at: http://www.idot.illinois.gov/home/resources/Forms-Folder/m. See Central Bureau of Materials Forms BMPR PCCQ01, BMPR PCCQ02, BMPR PCCQ03, BMPR PCCQ04, BMPR PCCQ06, BMPR_PCCQ08, BMPR_PCCQ09 and_BMPR_PCCQ10 (links embedded). The Producer shall meet the concrete sampling and testing equipment requirements in the Department's "Required Sampling and Testing Equipment for Concrete" document, which can be found in the Manual of Test Procedures for Materials.

Test equipment used to determine compressive strength shall be calibrated annually or more often if results indicate a possible discrepancy. Calibration shall be performed by an independent agency using calibration equipment traceable to the National Institute of Standards and Technology (NIST). The Producer shall provide the Department a copy of the calibration documentation.

The compression device capable of testing concrete cylinders and cores shall also be capable of automatically recording the strengths. An alternate system of recording strengths may be approved by the Engineer.

1.1.5 Temperature Recording and Measuring Devices

Concrete Temperature

Temperature restrictions as outlined in Division 3 of this manual shall be monitored by a continuous time and temperature recording device. The device shall record temperatures in degrees Fahrenheit or Celsius at intervals not to exceed 15 minutes and shall have an accuracy of ±4° F (±2° C). A temperature record chart for the curing period, including heat-up and cool-down times shall be provided to the Inspector. At least three concrete temperature recording devices shall be provided by the Producer when using steam, supplemental heat, insulated blankets with or without steam/supplemental heat, or whenever directed by the Inspector. This shall apply to each casting bed. The main reason for a minimum of three devices instead of two (see Section 3.3.4 (2)) is to compensate for a device failure or false reading. The extra device can also be used to gain additional knowledge of temperatures in a product. Note, however, that the number of temperature recording devices shall be sufficient to measure heat uniformity.

Ambient Temperature

One temperature measuring device shall be provided by the Producer to monitor ambient air temperatures. This device may be a thermometer and is not required to be a recording device.

1.1.6 Concrete Plant and Delivery Truck Equipment

The concrete plant and delivery trucks shall be approved according to Section 1103 of the Standard Specifications.

1.1.7 Miscellaneous Equipment

The Producer shall provide to the Inspector a personal computer system capable of using software developed and distributed by the Central Bureau of Materials.

SECTION 1.2 – QUALITY CONTROL

1.2.1 General

Quality control shall be the responsibility of the Producer. The Producer shall make every effort to fabricate members within tolerances and without cracks or other defects. Quality control includes the recognition of obvious defects and their immediate correction. Quality control also includes appropriate action when dimensional tolerances are being approached or equaled, when passing test results are near specification limits or to resolve test result differences with the Inspector. Quality control may require increased testing, communication of test results to the appropriate personnel and the Inspector, modification of operations, suspension of concrete production, rejection of material, or other actions as appropriate. The Inspector shall be immediately notified of any failing tests and subsequent remedial action. Passing tests shall be reported not later than the start of the next workday.

1.2.2 Quality System Manual

The Producer shall develop, maintain and revise a Quality System Manual (QSM) according to “Preparation Guidelines for a Structural Plant” (QSM-1) which is published by PCI. Appendix IL in QSM-1 shall be referred to in conjunction with the main body of the document to fulfill the QSM requirements of the Department and PCI.

The Producer shall initially submit a QSM to the District responsible for inspection and the Central Bureau of Materials for review and comment. Most of the comments on a Producer’s QSM from the District and Central Bureau of Materials shall be addressed by the Producer before submittal of the QSM to PCI. If any additional comments from the Department are required, they will be forwarded to PCI by the Central Bureau of Materials as part of the official Departmental letter of review completion delivered by electronic or other suitable means. Once the Departmental review process is completed, the Producer is responsible for submitting the revised QSM to PCI for further review and approval.

After a Producer’s QSM has been approved by PCI, approved copies (with Signature Page) will be delivered to the District responsible for inspection and Central Bureau of Materials by electronic or other suitable means. The source of delivery will be PCI. The District and Central Bureau of Materials will keep a copy of any discontinued QSM for a minimum of three years.

Construction of Department precast prestressed products shall not begin until approval of the QSM by PCI and Department inspection (District and/or Central Bureau of Materials) of the Producer’s plant shows that it meets Department Specifications (see also the Introduction to this manual).

The approved QSM shall not be construed as acceptance of any prestressed concrete product. The Department may request the QSM be amended at any time for approval by PCI concerning issues which pertain to work performed for IDOT. The Department reserves the right to halt the construction of Department precast prestressed concrete products until the QSM is reviewed by the Department and approved by PCI.

The Department (without consultation or concurrence from PCI) may suspend a Producer’s opportunity to bid/supply on Department lettings for a stated period of time under any of the following circumstances:

1. Misrepresentation of materials or products
2. Submittal of false records
3. Failure to follow this manual
4. Failure to follow the approved QSM
5. Failure to comply with the physical standards of this manual
6. Performs work determined by the Department to be detrimental to the quality of the precast prestressed product

The Regional Engineer and the Engineer of Materials (Central Bureau of Materials), or their designated representatives, shall mediate any dispute arising from the administration of this manual. If the resolution of the dispute is not satisfactory to the Producer, the Producer may submit a written appeal to the Director of Highways, or his/her designee.

1.2.3 Qualifications

The Producer shall designate a Quality Control (QC) Manager who has the experience, responsibility, and authority to make decisions regarding quality control at the production site. The QC Manager shall have successfully completed the following training courses and shall be capable of demonstrating the proper testing procedures to the Department.

1. IDOT 3-day Mixture Aggregate Technician or 5-day Aggregate Technician Course.
2. PCI Level I* / II - Quality Control Personnel Certification Program.
   *Successful completion of ACI Concrete Field Testing Technician – Grade I Course is a requirement for PCI Level I.

Duties of the QC Manager shall include, but are not limited to the following:

1. Understand the specifications and related documents regarding Quality Control/Quality Assurance (QC/QA). Read the most current approved QSM by PCI.
2. Manage overall project quality control and be responsible for each stage of fabrication and production.
3. Ensure the laboratory, concrete plant, delivery trucks, and prestressing equipment are approved by the Inspector.
4. Ensure the test equipment is maintained and calibrated as required by the appropriate test procedure.
5. Ensure the product meets the requirements of the specifications.
6. Ensure the Inspector is notified of any material supply problems.
7. Ensure the Inspector is properly notified of test results. Consult with the Inspector when questions arise concerning acceptance or rejection of materials or the final product.
8. Ensure all observations, inspections, adjustments to the mix design, test results, retest results, and corrective action are documented promptly, and in the specified format.
9. Supervise quality control personnel.

10. Ensure sufficient personnel are provided to perform the required inspections, sampling, testing, and documentation. Ensure work is accurate and done in a timely manner.
11. Provide the Inspector a means to contact him/her when not at the plant unless another individual at the plant has been given authority to make decisions.
12. Maintain detailed records of all "Notices of Unacceptable Products at Plant or Jobsite" (BMPR Form PS02) which shall be made available to PCI Auditors during plant audits conducted by PCI and upon request at any time. Detailed records include submitted remedy proposals; remedy acceptance notices; product rejection notices; post mail, e-mail and fax correspondence; etc.
13. Maintain detailed records of all "Inspection Feedback to Precast Prestressed Concrete Producer" (BMPR Form PS03) which shall be made available to PCI Auditors during plant audits conducted by PCI and upon request at any time. Details records include attached pages, Producer responses, etc.

The QC Manager may further assign quality control testing responsibilities as needed or required. Personnel testing aggregate only shall have successfully completed the IDOT 3-day Mixture Aggregate Technician or 5-day Aggregate Technician Course. Personnel conducting fresh concrete testing only shall have successfully completed the American Concrete Institute (ACI) Concrete Field Testing Technician – Grade I Course. An individual who has successfully completed the Department's Portland Cement Concrete Tester Course may provide assistance with sampling and testing, provided the individual is monitored on a daily basis by an individual who has successfully completed the ACI Grade I course. However, any adjustments to the mix shall be made by personnel who have successfully completed the ACI Grade I course.

Personnel conducting cylinder testing shall have successfully completed the ACI Grade I course or the Concrete Strength Testing Technician certification by ACI. Personnel performing strand tensioning and witnessing overall strand release (detensioning) operations shall have successfully completed the PCI Level I course. Personnel determining strand tensioning and elongation corrections, and supervising personnel performing strand tensioning and overall strand release operations shall have successfully completed the PCI Level II course.

Once the QC Manager or Producer's personnel have successfully completed a training class, the Department will not require individuals to take the class again for recertification purposes. However, since a fabrication plant is to be certified under the PCI Certification Program, recertification of an individual in a training class may be required for this program.

Duties of the PCI Level II Technician shall include, but are not limited to the following:

1. See PCI Level I Technician duties.
2. Check that products comply with approved shop drawings.
3. Supervise personnel during strand tensioning and detensioning operations. Determine strand tensioning and elongation corrections, and when required, extent of strand debonding (as detailed on the contract plans).
4. Perform aggregate moisture tests to adjust mix design aggregate batch weights (mass). Refer to the current "Portland Cement Concrete Level II Technician Course - Manual of Instructions for Concrete Proportioning" (link embedded) for information and guidance on tests and proportioning adjustments. Note: The PCI Level II Technician may train

anyone to sample and test aggregate for moisture, provided the individual is monitored on a daily basis by the PCI Level II Technician. This is not applicable to aggregate sampling and testing for gradation, or to any other type of test.

5. Ensure compliance with specifications and supervise personnel during accelerated curing operations.
6. Perform and/or supervise personnel during welding of reinforcing steel.

Duties of the PCI Level I Technician shall include, but are not limited to the following:

1. See ACI Grade I Technician duties.
2. Understand and interpret the approved shop drawings.
3. Perform strand tensioning and witness overall strand release operations, including strand debonding when required (as detailed on the contract plans).

Duties of the ACI Grade I Technician shall include, but are not limited to the following:

1. Understand the specifications and related documents regarding QC/QA. Read the Quality System Manual (QSM) and any amendments to the QSM.
2. Maintain and calibrate test equipment as required by the appropriate test procedure.
3. Sample the mixture.
4. Perform temperature, slump, slump flow (self-consolidating concrete (SCC)), flow (CLSM), J-Ring (SCC), L-Box (SCC), hardened visual stability index (SCC), and air content tests and compare with specifications. If test results are unsatisfactory or near specification limits, take appropriate action and retest when applicable. Refer to the current "Portland Cement Concrete Level I Technician Course - Manual of Instructions for Concrete Testing" (link embedded) for information and guidance on tests.
5. Perform unit weight test and determine yield.
6. Make strength and hardened visual stability index (SCC) specimens. Transport strength specimens properly and ensure correct curing. Break strength specimens. NOTE: If an individual has the responsibility of breaking strength specimens only, such as at a consultant's laboratory, this individual is required to have successfully completed the ACI Grade I course or the Concrete Strength Testing Technician certification by ACI.
7. Monitor truck revolutions and haul time.
8. Determine the required quantity of water and admixtures for adjusting the mixture, to meet specifications and field conditions. For further information for making concrete mixture adjustments, refer to the "Portland Cement Concrete Level I Technician Course - Manual of Instructions for Concrete Testing" (link embedded).
9. Observe the discharge of a mixture by the delivery truck, and take appropriate action if a problem is identified.
10. For a mixture which is not mixed on the jobsite (i.e. at the plant), ensure the required information per Article 1020.11(a)(7) is recorded on the delivery truck ticket.
11. Document all observations, inspections, adjustments to the mix design, test results, retest results, and corrective actions promptly, and in the specified format.

12. Maintain communications with plant personnel (concrete plant operator) to control the mixture, for compliance with the specifications.
13. Notify the Inspector of test results.
14. Report test results to the Quality Control Manager.
15. Supervise the Concrete Tester.

Duties of the Concrete Tester shall include, but are not limited to the following:

1. Sample the mixture.
2. Perform temperature, slump, slump flow (self-consolidating concrete (SCC)), flow (CLSM), J-Ring (SCC), L-Box (SCC), hardened visual stability index (SCC), air content and unit weight tests.
3. Make strength and hardened visual stability index (SCC) specimens.
4. Monitor truck revolutions and haul time.
5. Observe the mixture and notify the ACI Grade I Technician of any problems.
6. Assist the ACI Grade I Technician with adjustments to a mixture, by adding water or an admixture.
7. For a mixture which is not mixed on the jobsite (i.e. at the plant), ensure the required information per Article 1020.11 (a)(7) is recorded on the delivery ticket.
8. Document all observations, inspections, adjustments to the mix design, test results, retest results, and corrective actions promptly, and in the specified format.
9. Report truck revolutions, haul time, and test results to the ACI Grade I Technician. Immediate notification is required if truck revolutions, haul time, or test results are near specification limits or unsatisfactory.

Duties of the Mixture Aggregate Technician shall include, but are not limited to the following:

1. Obtain and split aggregate samples.
2. Perform gradation test for coarse and fine aggregates.
3. Document test results.

Duties of the Aggregate Technician shall include, but are not limited to the following:

1. Obtain and split aggregate samples.
2. Perform gradation test for coarse and fine aggregates.
3. Document test results.

The Producer shall display the PCI B3-IL or PCI B4-IL Certification in the QC Manager's office.

1.2.4 Quality Control Testing Requirements

The QC Manager or qualified personnel shall conduct the required testing at the following frequencies, but sampling is not required to be random:

QC Test	Frequency	IL Modified AASHTO or ASTM Test Method or Illinois Test Procedure
Dry Fine and Coarse Aggregate Gradation	Once per week	ITP 2, ITP 27, and ITP 248
Air Content	Note 1	IL Modified AASHTO R 60, and T 152 or T 196
Slump	Note 1	IL Modified AASHTO R 60 and T 119
Strength	Note 1	Note 2
Slump Flow	Note 1	Illinois Test Procedure SCC-1 and SCC-2
Visual Stability Index	Note 1	Illinois Test Procedure SCC-1 and SCC-2
J-Ring	Note 1	Illinois Test Procedure SCC-1 and SCC-3
L-Box	Note 1	Illinois Test Procedure SCC-1 and SCC-4
Hardened Visual Stability Index	First batch poured each day	Illinois Test Procedure SCC-1 and SCC-6; Note 3
Temperature	As needed to control production	IL Modified AASHTO R 60 and ASTM C 1064

Note 1: Sampling shall be at the point of placement. For each bed, a batch of concrete shall be sampled on the first batch and every 10 cu. yd. (8 cu. m) thereafter, except the minimum number of concrete batches sampled for a bed pour shall be two. Preference shall be given to sampling the first batch and the last full batch when only two batch samples are required. The frequency for strength samples may be increased from every 10 cu. yd. (8 cu. m) up to a maximum of every 25 cu. yd. (20 cu. m) with approval of the Inspector. Additional sampling may be required as determined by the Inspector.

When a concrete batch is sampled for strength per Note 2, a minimum of four 6- by 12-in. (150- by 300-mm) or six 4- by 8-in. (100- by 200-mm) cylinders shall be molded. If the Producer is performing cylinder breaks prior to test of record (28-days) to expedite shipping, the Inspector may request additional cylinders be molded for 28-day breaks to verify the mix design target strength.

The Producer shall have the option to perform either the J-Ring or L-Box test.

Note 2: Compressive strength test results shall be recorded. Concrete for the test specimens shall be obtained according to Illinois Modified AASHTO R 60. The cylinders shall be made according to Illinois Modified AASHTO T 23. Strength shall be defined as the average of two 6- by 12-in. (150- by 300-mm) cylinder breaks or three 4- by 8-in. (100- by 200-mm) cylinder breaks. Per Illinois Modified AASHTO T 23, cylinders shall be 6 by 12 in. (150 by 300 mm) when the nominal maximum size of the coarse aggregate exceeds 1 in. (25.0 mm). All

testing of cylinders shall be performed according to Illinois Modified AASHTO T 22. Specimens should always be tested to maximum load (i.e. failure), and the precision and bias provided in Illinois Modified AASHTO T 22 may be used to evaluate test results.

Note 3: The Producer shall retain hardened visual stability index cut cylinders until permission is given by the Inspector for disposal.

It is recommended that additional cylinders be cast whenever a new mix design is being used or shipment of product prior to test of record (28-days) is desired. Additional cylinders may be also necessary when match curing (see Section 3.3.3 and Appendix B).

As soon as the cylinders are made, they shall be moved immediately to their place of curing. If this cannot be done, they shall be temporarily covered according to Illinois Modified AASHTO T 23 to retain moisture until they are moved to their place of curing. Furthermore, if cylinders are not moved immediately, they shall not be moved until after the preset period (see Section 3.3.4). The utmost care shall be exercised to ensure that cylinders are not damaged during handling. All test cylinders representative of any one bed shall be cured with that bed and shall be placed in a position that provides no undue advantage as compared to any part of the product from the standpoint of strength gain.

Cylinders tested to indicate concrete strength at strand release shall be removed from the casting bed or match curing system, if applicable, approximately 1-hour prior to the time of testing unless otherwise approved by the Inspector. Since testing cylinders at elevated temperatures may affect strength, cylinders shall cool to a temperature between 70° and 90° F (20° and 30° C) before testing. Cylinders shall not be permitted to dry and shall be covered according to Illinois Modified AASHTO T 23 during the cooling period to retain moisture. Two 6- by 12-in. (150- by 300-mm) or three 4- by 8-in. (100- by 200-mm) cylinders shall be tested from each batch sampled. In order to proceed with strand release, the average strength of the cylinders from each of the concrete batch samples shall have obtained a compressive strength that meets or exceeds the specified strength.

The cylinders for 28-day strength tests shall be removed from the casting bed after release of the strands and shall be cured with the product or in the same environment. Two 6- by 12-in. (150- by 300-mm) or three 4- by 8-in. (100- by 200-mm) cylinders shall be tested from each batch sampled. In order to proceed with shipping of product, the average strength of the cylinders from each of the concrete batch samples shall have obtained a compressive strength that meets or exceeds the specified 28-day strength.

The Producer may elect to test cylinders for 28-day strength at an earlier date to expedite shipping if shipping is allowed prior to 28-days according to Section 3.6.3. However, the Producer shall not exhaust all cylinders prior to 28-days. A minimum of two 6- by 12-in. (150- by 300-mm) or three 4- by 8-in. (100- by 200-mm) cylinders from each batch sampled shall be saved for testing at 28-days, unless the Inspector waives this requirement. (The 28-day test is more representative of complete cement hydration and maximum strength development.)

If the cylinders tested prior to 28-days have all attained the required 28-day strength, the Producer may discard any remaining cylinders when permission is given by the Inspector for disposal. However, a minimum of two 6- by 12-in. (150- by 300-mm) or three 4- by 8-in. (100- by 200-mm) cylinders each month will be selected by the Inspector for testing by the Producer at 28-days, and the results will be averaged. The cylinders will be from the same batch of concrete, and testing of multiple batches of concrete each month may be warranted if the mix design is subjected to various curing methods. The test results obtained will be used to verify the Producer's mix design target strength. Mix design target strength is discussed in

Section 3.1.1. In addition, when testing cylinders, it is a good practice to determine the weight (mass) of the cylinder before testing. Weighing a strength specimen before testing is a good way to check for degree of consolidation (effort and technique). A lower weight (mass) may also indicate if the cylinder had a high air content, high water content (water has a much lower density than concrete), or other defect.

If a batch fails strength requirements, then pour records shall be examined to determine which product(s) contain concrete from the batch, the product(s) shall be declared unacceptable by the Producer, and a remedy proposal may be submitted. When submitting a remedy proposal, it is recommended to follow 9.8 “Low Strength” in the Portland Cement Concrete Level I Technician Course – Manual of Instructions for Concrete Testing.

Strand tensioning shall be recorded for each strand in the product. When required (as detailed on the contract plans), the extent of strand debonding shall be recorded for each applicable strand in the product. (See Section 2.2.8 (10) for additional information regarding debonded strand.)

Members shall be cast to produce the dimensions shown on the contract plans when installed at the jobsite. As such, the actual cast length shall be shown on the shop drawings. Factors that affect cast length include, but are not necessarily limited to, adjustments required due to profile grade, elastic shortening, creep, and shrinkage. Contract plan lengths of members depict only horizontal lengths. Producers shall adjust this length for the profile grade in order to determine the actual target contract plan length. The target contract plan length shall then be adjusted for other affects (i.e. elastic shortening, creep, and shrinkage) in order to determine the cast length.

All measurements of the product shall be recorded and compared to the contract plans and tolerances allowed. Dimensional tolerances are provided as follows, and also illustrated by sketches in Appendix A. For camber, production methods shall be in a manner that minimizes camber differential between beams.

For tolerances of items not listed in this manual, tolerances listed in the PCI Tolerance Manual (MNL-135) shall be used. For items not listed in either this manual or the PCI Tolerance Manual, the Bureau of Bridges and Structures shall be contacted.

Maximum Allowable Dimensional Tolerances for Deck Beams

	in. (mm) except as noted
Depth, top slab	± 1/2 (± 13)
Depth, bottom slab	0 to + 1/2 (0 to + 13)
Depth, overall	± 1/4 (± 6)
Depth (overall from the bottom of the beam to the top of the angle when angles are required)	± 1/8 (± 3)
Width, web	± 1/4 (± 6)
Width, overall	± 1/4 (± 6)
Length (string line measurement along bottom of beam)	± 3/4 (± 19)
Stirrup Bars, longitudinal spacing Within a distance equal to two times the depth of the beam and measured from the end of the beam In all other locations The number of stirrups shall not be less than the required number in each length. Additional stirrups may be added when the maximum allowable tolerance is exceeded provided the minimum clearance between stirrups is not less than 2 (50).	 + 1 (+ 25) + 2 (+ 51)
Stirrup Bars, from vertical alignment	± 2 (± 51)*
End Stirrup Reinforcement	± 1/4 (± 6)
Maximum distance between U and A bars that lap to form a stirrup (except in end blocks, where U and A bars shall be tied together)	2 (51)
D(E) bars around rail anchorages, clear spacing from side of beam	± 1/4 (± 6)
Variation from specified elevation end squareness or skew	± 1/2 (± 13)
Variation from specified plan end squareness or skew	± 1/8 per 12 width max ± 1/2 (± 3 per 300, max ± 13)
Beam Seat Bearing Area (variation from plane surface when tested with a straightedge)	± 1/8 (± 3)
Sweep (deviation from a straight line parallel to the centerline of beam)	± 1/8 per 15 ft., max ± 5/8 (±3 per 4.6 m, max ± 16)
Void Tube Placement Distance from end of void tube to transverse tie rod tube Distance from end of void tube to end of beam	 ± 1/2 (± 13) ± 1 (± 25)
Dowel Tubes (spacing between the centers of tubes and from the centers of tubes to the ends and sides of the beam)	± 1/2 (± 13)
Tie Rod Tubes (spacing from the centers of tubes to the ends of the beam)	± 1/2 (± 13)
Tie Rod Tubes (spacing from the centers of tubes to the bottoms of the beam)	± 1/2 (± 13)
Strand Position At points of support All other locations	 ± 1/8 (± 3) ± 1/4 (± 6)
Lifting Loops, from end of beam to centerline of loop	± 3 (± 76)
Lifting Loops, from side of beam to centerline of loop	± 1 (± 25)
Lifting Loops, projection above beam	+ 6 to - 0 (+ 152 to - 0)
Lifting Loops, embedment (Embedment may be greater than shown on plans provided clearance at bottom of beam is adequate.)	- 0
Contract Plan Inserts	± 1/2 (± 13)
Contractor Inserts	See Section 3.5.2

NOTE: Camber measurements may be required by the Department if there is a concern (i.e. no camber, negative camber, excessive camber, or differential camber).
* The allowable tolerance limit is subject to the stirrup bar longitudinal spacing, and therefore may be reduced.

Maximum Allowable Dimensional Tolerances for I-Beams, Bulb T-Beams, and IL-Beams*

	in. (mm) except as noted
Depth, flanges, webs, and fillets	± 1/4 (± 6)
Depth, overall	+ 1/4 to - 1/8 (+ 6 to - 3)
Width, flanges and fillets	± 1/4 (± 6)
Width, web	+ 1/4 to - 1/8 (+ 6 to - 3)
Length (string line measurement along bottom of beam)	± 1 (± 25)
Variation from specified elevation end squareness or skew	± 3/16 per 12 depth max ± 1 (± 5 per 300, max 25)
Variation from specified plan end squareness or skew	± 1/8 per 12 width max ± 1/2 (± 3 per 300, max 13)
Splitting Plate Assembly (placement from end)	± 5/8 (± 16)
Bearing Plates (spacing between the centers of bearing plates to the ends of the beam)	± 5/8 (±16)
Bearing Plate or Bearing Area (variation from a true horizontal plane or from a plane surface when tested with a straightedge)	± 1/8 (± 3)
Stirrup Bars (extension above top of the beam)	+ 1/4 to – 1/2 (+ 6 to - 13)
Stirrup Bars, longitudinal spacing	
Within a distance equal to two times the depth of the beam and measured from the end of the beam	+ 1 (+ 25)
In all other locations	+ 2 (+ 51)
The number of stirrups shall not be less than the required number in each length. Additional stirrups may be added when the maximum allowable tolerance is exceeded provided the minimum clearance between stirrups is not less than 2 (50).	
Stirrup Bars, from vertical alignment	± 2 (± 51)**
Sweep (deviation from a straight line parallel to the centerline of the beam)	± 1/8 per 10 ft. (± 3 per 3 m)
Strand Position	
At points of support	± 1/8 (± 3)
All other locations	± 1/4 (± 6)
Lifting Loops, from end of beam to centerline of loop	± 3 (± 76)
Lifting Loops, from side of beam to centerline of loop	± 1 (± 25)
Lifting Loops, projection above beam	+ 6 to - 0 (+ 152 to - 0)
Lifting Loops, embedment (Embedment may be greater than shown on plans provided clearance at bottom of beam is adequate.)	- 0
Contract Plan Inserts	± 1/2 (± 13)
Contractor and Producer Inserts	See Section 3.5.2 and 3.6
G6 Bar Assembly/Extended Strand Diaphragm Anchorage (projects from base of beam)	
G6 Bar or Extended Strand: bottom projection out of beam end	+ 1/2 to -2 (+13 to -51)***
Extended Strand: plumbness	+ 7 (+ 178)
G6 Bar: vertical and horizontal location	± 1/2 (± 13)
Hold Down Devices, from horizontal alignment	± 12 (± 300)
Formed Holes for Permanent Bracing	
Vertical and horizontal location	± 1 (±25)
Differential alignment (see Section 3.5.2)	± 1 (±25)

NOTE: Camber measurements may be required by the Department if there is a concern (i.e. no camber, negative camber, excessive camber, or differential camber).
* Additional guidance regarding tolerances for IL-beams can be found in Appendix A.
** The allowable tolerance limit is subject to the stirrup bar longitudinal spacing, and therefore may be reduced.
*** See Appendix A.

SECTION 1.3 – QUALITY ASSURANCE

1.3.1 General

An Inspector will be provided by the Illinois Department of Transportation. This person will have successfully completed the same training courses as required of the Quality Control Manager.

The Department Inspector may further assign QA testing responsibilities according to the procedures allowed the Quality Control Manager.

Once Department Inspectors have successfully completed a training class, they will not be required to maintain certification.

The Central Bureau of Materials has primary quality assurance responsibility for Producers located in adjacent states that are 50 or more miles from the Illinois state line, unless other arrangements are made with a District.

The Producer shall reimburse the Department's transportation, per diem (meals), lodging, and incidental travel costs for initial inspections, annual reviews, and quality assurance inspections. For transportation and lodging costs, the provider of these services shall bill the Producer directly. Travel costs will apply if the Central Bureau of Materials has quality assurance responsibility for the plant and the trip from BMPR to the plant, the plant inspection, and the return trip to the Central Bureau of Materials cannot be completed within one day's normal working hours of 8:00 AM to 4:30 PM. Reimbursement for travel costs shall be provided no later than 30 calendar days after the receipt of costs submitted by the Department.

1.3.2 Quality Assurance Requirements

The Inspector will assure that the Producer's quality control measurements and testing correctly characterize the prestressed product being made for each project. Quality assurance will be accomplished by: 1) testing of split samples as set forth below, 2) observing tests conducted by the Producer, 3) checking measurements of the precast prestressed product for comparison to contract plans and allowable tolerances. Unless otherwise noted (i.e. quality assurance at the 100% level), quality assurance need not be performed on a per product basis. The witness of testing, independent sample testing, and split sample testing will be done in a random manner as determined by the Inspector. In addition, the Inspector will witness and take immediate possession of or otherwise secure the Department's split sample obtained by the Producer.

Quality assurance testing of the aggregate gradations will be performed at a minimum level of 10% of the testing required of the Producer.

Quality assurance testing of the air content, slump flow (SCC), visual stability index (SCC), J-ring (SCC) and L-box (SCC) determinations will be performed at a minimum level of 10% of the testing required of the Producer.

Quality assurance observations or assurance testing of slump will be performed at a minimum level of 10% of the testing required of the Producer.

Quality assurance observations or assurance testing of the hardened visual stability index (SCC) will be performed at a minimum level of 50% of the testing required of the Producer.

Quality assurance observations of the strand tensioning will be performed at a minimum level of 75%.

Quality assurance observations of the extent of strand debonding, when required (as detailed on the contract plans), will be performed at a minimum level of 75%.

Quality assurance testing of compressive strengths for strand release will be performed at a minimum level of 25% of the testing required of the Producer. This testing will be as observations of the Producer's testing.

Quality assurance testing of compressive strengths for final strength will be performed at a minimum level of 25% of the level required by the Producer. This testing will be as observations of the Producer's testing.

Quality assurance observations of all fabrication details, such as: reinforcement placement; radii of bends in bent reinforcement; strand sag; form erection; and placement of tubes, guardrail inserts, chairs, lifting devices, and curbs prior to concrete placement will be performed at a minimum level of 50%.

Quality assurance observations of strand release will be performed at a minimum level of 10%.

Quality assurance dimensional tolerance measurements will be performed at a minimum level of 50%. The Producer shall provide access for inspection of all sides of the beam.

Quality assurance crack measurements will be performed at a level of 100%.

Quality assurance visual inspection will be performed at a level of 100%. The brief visual inspection shall consist of examining the product for placement of reinforcement or other hardware protruding from the product, overall dimensions, sweep, camber, chips, spalls, or anything else out of the ordinary (see Section 3.5.2 for additional information concerning length of beams and sweep). If a precast prestressed product was loaded on a truck and subsequently unloaded at the plant because delivery could not be made, it is recommended to perform another visual inspection before the next attempt for delivery because damage may have occurred.

As a minimum, an annual inspection of the Plant and Laboratory will be performed. The inspection will be performed by the District or Bureau, or the District and Bureau. However, for Plants over 50 miles from the Illinois border, the inspection frequency will be determined based upon actual production quantities for Departmental projects.

SECTION 1.4 – ACCEPTANCE

1.4.1 General

Product acceptance will be based on the Standard Specifications and the following:

(1) The Producer's compliance with all contract documents for quality control.

(2) Validation of Producer quality control test results by comparison with the Inspector's quality assurance test results using split samples. Any quality control or quality assurance test determined to be flawed may be declared invalid only when reviewed and approved by the Inspector. The Inspector will declare a test result invalid only if it is proven that improper sampling or testing occurred. The test result is to be recorded and the reason for declaring the test invalid will be provided by the Inspector.

(3) Comparison of the Inspector's quality assurance test results with specification limits using samples independently obtained by the Inspector.

(4) Producer's recorded results indicating the product meets or exceeds the specifications.

(5) Measurements of the product with respect to the contract plans and allowable tolerances.

(6) Visual inspection of the completed product for damage prior to shipping.

The Department will not accept remedied precast prestressed products that will have a diminished service life. For additional information refer to Article 105.03 of the Standard Specifications.

At the request of the Inspector, the Producer shall obtain split samples in sufficient quantities to allow comparison of test results. A split sample is one of two equal portions of a field sample, where two parties each receive one portion for testing. Split samples shall be tested by the Producer and the Inspector. Aggregate split samples and any failing strength specimen shall be retained until permission is given by the Inspector for disposal. The results of all quality assurance tests by the Inspector will be made available to the Producer. However, Producer split sample test results shall be provided to the Inspector before Department test results are revealed. Differences between the Inspector's and the Producer's split sample test results will not be considered extreme if within the following limits.

Test Parameter	Acceptable Limits of Precision
Slump	0.75 in. (20 mm)
Air Content	0.9%
Compressive Strength	900 psi (6200 kPa)
Aggregate Gradation	See "Guideline for Sample Comparison" in Appendix A of the Manual of Test Procedures for Materials.
Slump Flow (SCC)	1.5 in. (40 mm)
Visual Stability Index (SCC)	Not Applicable
J-Ring (SCC)	1.5 in. (40 mm)
L-Box (SCC)	10%
Hardened Visual Stability Index (SCC)	Not Applicable

When acceptable limits of precision have been met, but only one party is within specification limits, the failing test shall be resolved before the material may be considered for acceptance.

Split Sample Testing

If either the Inspector's or the Producer's split sample test result is not within the specification limits, and the other party is within specification limits, immediate retests on a split sample shall be performed for slump, air content, aggregate gradation, slump flow (SCC), visual stability index (SCC), J-ring value (SCC), or L-box blocking ratio (SCC). A passing retest result by each party will require no further action. If either the Inspector's or the Producer's slump, air content, or aggregate gradation split sample retest result is a failure, or if either the Inspector's or Producer's strength test result is a failure, and the other party is within specification limits; the following actions shall be initiated to investigate the test failure:

(a) The Inspector and the Producer shall investigate the sampling method, test procedure, equipment condition, equipment calibration, and other factors.

(b) The Inspector or the Producer shall replace test equipment, as determined by the Inspector.

(c) The Inspector and the Producer shall perform additional testing on split samples, as determined by the Inspector.

For aggregate gradation, slump, air content, slump flow (SCC), visual stability index (SCC), J-ring value (SCC), and L-box blocking ratio (SCC), if the failing split sample test result is not resolved according to (a), (b), or (c), and the mixture has not been placed, the Producer shall reject the material, unless the Inspector accepts the material for incorporation in the work according to Article 105.03 of the Standard Specifications. If the mixture has already been placed, or if a failing strength test result and hardened visual stability index (SCC) is not resolved according to (a), (b), or (c), the product will be considered unacceptable. The Producer may submit a remedy proposal.

If a continued trend of difference exists between the Inspector's and the Producer's split sample test results, or if split sample test results exceed the acceptable limits of precision, the Inspector and the Producer shall investigate according to items (a), (b), and (c).

Independent Sample Testing

An independent sample is a field sample obtained and tested by only one party. For aggregate gradation, slump, air content, slump flow (SCC), visual stability index (SCC), J-ring value (SCC), L-box blocking ratio (SCC), and hardened visual stability index (SCC), if the result of a quality assurance test on a sample independently obtained by the Inspector is not within specification limits, and the mixture has not been placed, the Producer shall reject the material, unless the Inspector accepts the material for incorporation in the work according to Article 105.03 of the Standard Specifications. If the mixture has already been placed or the Inspector obtains a failing strength test result, the product will be considered unacceptable. The Producer may submit a remedy proposal.

DIVISION 2 – PRESTRESSING

SECTION 2.1 – STRESSING REQUIREMENTS

2.1.1 General

The provisions set forth in this section pertain to the application and measurement of stresses applied to prestressed concrete members manufactured by the process of pretensioning. The instructions are limited to the system which consists of tensioning the strands before the concrete is placed and releasing them from their anchorages after the concrete has attained the specified strength, thus transferring to the concrete the forces resisted by the anchorages.

The loads induced by tensioning shall be determined both by observing the elongation of the strands and, independently of the elongation measurements, by a gauge suitable for the purpose. The two shall agree within 3% for straight strands and within 5% for draped strands. The required accuracy for the elongation of the strands provides an indirect, but suitable check of the applied strand tensioning load.

2.1.2 Systems of Jacking and Tensioning

Since tensioning by means of hydraulic jacks equipped with hydraulic pressure gauges is prevalent at plants in which inspection is performed, the following instructions apply to this method only. Other methods proposed for use will be jointly approved by the BBS, Central Bureau of Materials, and District responsible for inspection, if found satisfactory.

Preloads have normally been applied with hydraulic jacks. Manually operated jacks gauged by an approved dynamometer may also be used. A dynamometer can also be used as a substitute for an inoperative hydraulic low-pressure gauge.

Any system used shall be capable of applying and gauging the loads within the following tolerances:

Loads in excess of 2,000 lb. (9,000 N)	±2% of full scale (FS), i.e., the maximum capacity of the respective gauge

Since the jack ram usually is relatively small and has little friction loss, a hydraulic gauge connected to the hydraulic pressure system normally is adequate for gauging the loads produced. Such a gauge, therefore, may be used without a supplementary device, provided that the losses in the system do not produce a gauge reading which results in an error greater than 1% of the actual specified target applied load.

Automatic cut-offs are required on all systems and shall be adjusted to operate as nearly as is possible to the required load and within the specified tolerances.

2.1.3 Gauging Systems

Hydraulic gauges, load cells, dynamometers, and other devices for gauging loads shall be capable of being read accurately to within 1% of the specified target applied load. For example, the most commonly specified target applied load is 31 kips (137,900 N), and it shall be able to be read accurately by the person performing the tensioning operations to the nearest 310 lbs

(1,380 N). However, the specified target applied load for IL-beams is 43.9 kips (195,300 N), which shall be read to the nearest 439 lbs (195 N).

When a load cell and strain-indicating device is furnished, the Producer shall make diligent use of it. A check of load gauging devices should be made at any time when doubt exists as to their accuracy, as, for example, when difficulty is experienced in obtaining satisfactory agreement between the measured elongation and indicated load.

Pressure gauges, pressure transducers for hydraulic systems, or other measuring devices, such as digital readout, shall have a full range of measurement of 1½ to 2 times their normal working pressure, whether for initial or final force. Hydraulic gauges shall have reading dials not less than 6 in. (150 mm) in diameter and shall indicate the load on the jacking ram directly in lb. (N). If the same unit is used for both initial and final tensioning, the jacking system shall have separate gauges or separate scales to ensure accurate measurement of both the initial and final force. Gauge/transducer readings based on system pressure shall not be made below 10% or above 90% of the full-scale capacity unless the gauge/transducer is calibrated in that range with a verified 2% accuracy.

A gauge having a full load capacity of 45,000 lb. (200,000 N) is considered suitable for gauging the final loads for ¼, ⅜, $\frac{7}{16}$, and ½ in. (6.35, 9.53, 11.11, and 12.70 mm) strand. For $\frac{6}{10}$ in. (15.24 mm) strand, a suitable gauge should have full load capacity of at least 64,000 lb. (285,000 N). Gauges for reading preloads from 1,000 lb. (4,500 N) to 3,000 lb. (13,500 N) may have a full load capacity of 4,000 lb. (18,000 N). However, if a definite preload is established and constantly used, a gauge having a full-load capacity of twice the magnitude of the preload would be preferable.

A tensioning system employing hydraulic gauges shall have appropriate by-pass pipes, valves, and leak-proof fittings so that gauge pointers will not fluctuate but remain steady until the jacking load is released. Gauges shall be mounted at or near working eye level and within 6 ft. (2 m) of the operator and positioned so that readings can be obtained without parallax. The Producer shall halt the tensioning operation if the system is not operating satisfactorily.

2.1.4 Safety – Tensioning and Release of Strands

The Inspector is advised to use caution during tensioning operations because breakage of strands or failure of anchoring devices can result in personal injury. Three precautions are as follows.

(1) Shield

The Producer shall provide a shield with sufficient dimensions and strength to protect against the breakage of strands or failure of anchorage devices.

(2) Safe Area

The location where personal injury will not occur when a strand breaks or an anchorage device fails. The Producer shall ensure escape to this area is not impeded by miscellaneous items or equipment.

Personnel are cautioned to not stand directly behind a strand being tensioned, since a failure will normally result in the strand and debris shooting straight back.

Personnel are cautioned to not lean directly over a strand being tensioned or get their face and hands too close during measurement of the elongation. Again, the breakage of a strand or failure of an anchorage device could result in personal injury.

(3) Lights and Audible Alarm

Prior to tensioning a bed, a light and audible alarm shall be given. The Producer's light and alarm shall be adequate to be seen and heard, and both shall be in working order at all times.

Upon completion of tensioning, the casting bed is still viewed as potentially dangerous. Personnel are advised to avoid unnecessary exposure. When pouring concrete, the Producer's top tie devices shall not exceed the recommended spacing and shall be properly secured to the casting bed. After concrete has hardened, personnel still need to be cautious and aware of the safe area. In particular, personnel should be cautious of the area that is off limits during release of strands. Personnel should also be cautious when a beam is removed from the casting bed.

SECTION 2.2 – PRETENSIONING

2.2.1 General

(1) Preparation of Casting Bed. The Producer shall check the casting beds for deviations from a plane surface. Deviations sufficient to cause irregularities in the bearing area of the beams, or other irregularities that may approach or exceed the established tolerances shall be corrected.

The casting bed shall be treated with a substance that will prevent the bonding of concrete to it. An oil base release agent may be used; however, it shall be applied away from the strands, and the excess shall be wiped off before installing the forms. Regardless of how this is accomplished, it is imperative that the release agent does not come into contact with the prestressing strands.

If the bed is treated prior to stringing the strands with a substance that is apt to contaminate the strands, it shall be covered with an approved material, such as a sufficient thickness of treated wrapping paper, to prevent the substance from bleeding through. The paper is removed after stringing and tensioning of the strands. If the bed is treated after the strands are tensioned, the utmost care shall be exercised in placing the substance on the bed. If the bed is treated with a substance that sets and becomes hard, so as to prevent contamination of the strands during stringing, it shall be wiped or brushed to remove all dust or loose particles of the material before the strands are strung. In any case, the Producer shall examine the strands before the side forms are placed, and any strand found contaminated shall be replaced or satisfactorily cleaned with a solvent.

(2) Forms. Exterior forms shall be steel. Wooden bulkheads may be used for deck beams, provided they create the intended configuration, dimensions, and shape. They shall be replaced before their deterioration results in dimensions that approach tolerances. The casting bed shall have a concrete deck to which the form grillage and soffit plates shall be adequately anchored. Soffit plates shall be accurately centered, aligned, and leveled to the same plane.

Side forms shall have form plates of sufficient thickness, shall be sufficiently braced, and shall be anchored so as to withstand the forces due to vibratory placement of the concrete and to maintain correct alignment. The ends or sides of adjacent sections of form which are butt-jointed shall match smoothly and tightly and shall result in proper alignment. The side forms shall be cross-tied above the finished surface of the member at sufficiently close spacing to maintain true cross-sectional dimensions. Side forms shall be such that no more than two horizontal form lines are visible on the finished product.

The design of bulkheads shall be such that they can be placed and maintained in correct position between the side forms. Clamps, bolts, or other devices connecting the bulkheads to the side forms shall be capable of being removed or loosened before steam curing is applied, so that expansion of the side forms may occur freely and without damage to the beams. The bulkheads shall have slots or holes to permit passage of the prestressing strands and any required reinforcing steel. Sufficient space shall be left between bulkheads to properly permit the operations necessary for releasing the strands.

In the case of deck beams, provision shall be made for holding the inside forms or void tubes accurately in place to prevent flotation and misalignment.

Joints between soffit, side forms, and bulkheads shall be tight and, if necessary, shall be sealed. Holes and slots in the forms shall be plugged to prevent excessive mortar leakage.

Forms shall be free from paint or other protective substances that may cling to the surface of members. Forms shall be thoroughly cleaned before use.

If forms are approaching an unsatisfactory condition as specified herein, the Inspector may issue a BMPR Form PS03 to warn the Producer. When forms have reached an unsatisfactory condition that will make the product unacceptable, the Producer shall suspend production until the forms are renovated or replaced.

Forms, bulkheads, spacers, spreader bars, templates, and other equipment having a bearing upon accuracy of dimensions and trueness of lines of the completed beams shall be checked periodically. In no case shall the soffit or side forms be out of levelness or alignment by more than ⅛ in. in 10 ft. (3 mm in 3 m). The top surfaces of the forms (the area that determines the levelness of the riding surface) shall also be within ⅛ in. in 10 ft. (3 mm in 3 m). They shall be clean and free from incrustations of hardened concrete. The Producer shall make necessary corrections of any discrepancies observed.

(4) Bonded Fully Tensioned Strands Per Bed. All beams cast on a single bed shall be of the same cross section and have the same number of bonded fully tensioned strands (i.e. tensioned to the design loading) as is detailed in the contract plans. The practice of “masking” fully or partially tensioned strands (preventing bond between strands and concrete) that are in excess of those detailed on the contract plans will not be permitted. This includes excess strands that are used to temporarily offset internal beam stresses in order to facilitate transportation to a job site.

(5) Sacrificial Strands. The practice of using “sacrificial strands” inside of beams that are tensioned to at or near preload levels for the purpose of facilitating the tying and hanging of reinforcement is permitted. Strands used for this purpose shall be detailed on the shop drawings and shall be either ¼ in. (6.35 mm) or ⅜ in. (9.53 mm) in diameter.

2.2.2 Sequence of Stringing and Tensioning Strands

To avoid possible entanglement of strands during tensioning, a definite system of stringing and tensioning should be followed. The stringing of the strands should start with the bottom row and progress to the top row. For each row, the stringing also should progress from one side of the bed to the other. An orderly procedure of stringing and tensioning individual strands (that also includes considerations of sequencing when force and elongation corrections are required to compensate for either anchorage movement or shortening of self-stressing beds) is essential and facilitates the keeping of records.

2.2.3 Preload

An initial load, or preload, is applied to the individual strands to straighten them and eliminate undue sag, thus providing a starting or reference point for measuring elongation under the subsequent loading.

A preload of 2,000 to 4,000 lb. (9,000 to 18,000 N) is sufficient in most cases where casting beds range from 200 to 400 ft. (60 to 120 m) in length. However, for $^{6}/_{10}$ in. (15.24 mm) strand, the minimum preload shall be 2,200 lb. (9,800 N) because MNL-116 states that the minimum preload shall be 5% of the final load. Additionally, for longer casting beds, larger preloads should be used.

2.2.4 Final Load - Single Strand Tensioning

After the preload is applied, reference marks for use in determining elongation and slippage are established on the strands. They are then individually pulled to final load. The technique for accomplishing this will depend upon the facilities available and shall be according to the method described below, though proposed variations will be given consideration. The details of procedures at individual plants shall be jointly approved by the BBS, Central Bureau of Materials, and District responsible for inspection.

Each strand is tensioned to the total load required, as indicated by the gauge, including the corrections for operational losses, such as live and dead end seating, thermal expansion, anchorage movement, etc., according to the calculations described in this section, Appendix A, and the Department's general prestressing spreadsheet and IL-Beam prestressing spreadsheet (links embedded), found under "References" and "Guides/Spreadsheets" at the following link: http://www.idot.illinois.gov/doing-business/material-approvals/precast-prestress/index. The load determined from the elongation measurements shall agree within 3% for straight strands and within 5% for deflected strands with that indicated by the gauge.

If the load determined by elongation measurements does not agree with that indicated by the gauge within the required tolerance, the strand shall be re-tensioned during which operation the Producer shall look for possible misalignment of the jacking ram, entanglement of strands, and other conditions that may have had a bearing upon the accuracy of applying the load. The Producer shall also look for excessive slippage at the anchorage at the far end of the casting bed (dead end seating).

If the discrepancy still persists, the agreement between the gauge and strands may be observed by tensioning three or more additional strands. The gauge may be considered operative if agreement well within the tolerance limit is found for these. Recognizing the fact that some variation in the modulus of elasticity of the strands may sometimes exist, the tensioning of the strand in question may be accepted provided that the difference between the load determined by the elongation measurements and that indicated by the gauge does not exceed 4%. Also, no more than 10% of the total number of strands tensioned on any casting bed shall be accepted on that basis.

In any case, if the difference between the loads determined by the two methods of gauging persistently falls near or encroaches upon either one of the tolerance limits, the Producer shall discontinue the tensioning. The Producer shall notify the Department, the equipment and operation shall be carefully checked, and the source of the error determined and corrected.

2.2.5 Final Load - Multi-Strand Tensioning

When two or more strands are tensioned simultaneously by the same jack, the load shall be increased until the final load on each strand is attained, as indicated by measurements of the elongation of the strands. The combined load on the strands as indicated on the gauge shall be within 3% of the required load. The Producer shall furnish and have available two or more load cells of an approved design, which shall be placed on strands on opposite sides of the line of pull for further verification of the accuracy of the load and for checking the uniformity of pull on individual strands.

2.2.6 Draped Strands

Draped or deflected strands shall be tensioned in the deflected position. Partial tensioning of the strands in straight position and forcing them into the deflected position shall be permitted only when the details of the procedure have been submitted to and approved by the BBS.

The strands shall be held in the required deflected position with respect to the casting bed by suitable positioning devices at all points of change in slope. The devices shall be provided with a pin and roller feature that will effectively minimize friction during tensioning. They shall be of sufficient rigidity and shall have adequate support so that the position of the strands will remain substantially unchanged under the loads induced. To accommodate casting beds, a deviation in longitudinal direction, not exceeding the allowable tolerances (Section 1.2.4) from the position shown on the plans, may be permitted with respect to the hold down device on either side of the center of the beams. Symmetry of the hold down locations is preferred when possible.

Each strand shall be preloaded and tensioned to final load as outlined for single strand tensioning. The load determined by measurement of the elongation shall agree within 5% with that indicated by the hydraulic gauge. The loads determined by elongation measurements shall not be based on the length of the casting bed but on the true length of the deflected strand if the ratio of the true (or draped) length over that of the casting bed (straight strand) exceeds 1.002. The substantially greater tolerance than permitted for straight strands is occasioned by the fact that the friction in the positioning devices cannot be entirely eliminated.

If agreement within 5% is not obtained by tensioning in the usual manner from one end of the bed, the strands shall be tensioned successively or simultaneously from both ends. At each end the strand shall be pulled to the desired load and the elongation measured. The load determined from the sum of the two elongation measurements shall agree within 5% with that indicated by the gauge.

Friction at each of the positioning devices resists some of the force exerted in pulling the strand. The load actually applied to the strand, therefore, is decreased at each successive point of deflection away from the source of pull. When several beams are to be cast on the same bed, involving a large number of positioning devices, and even though tensioning is performed from both ends, the loss of stress in the strand away from the source or sources of pull may be excessive as evidenced by undue disagreement between the load determined by the elongation measurements and that indicated by the gauge. When this situation occurs, the number of points of deflection shall be reduced sufficiently so that the friction losses do not influence the tensioning beyond the permissible degree.

2.2.7 Elongation Measurements

Gauge readings are given preference over elongation measurements in single strand tensioning. Loads determined from elongation measurements, assuming that slippage and other losses are properly taken into account, are subject to errors introduced by variations of the modulus of elasticity of individual strands from that used in calculating the loads. Such errors normally have been found to be within the tolerance limits. Since gauges may become inoperative, a satisfactory check between the two methods of determining load is essential. Elongation measurements, when made with due care and accuracy, establish the dependability of loads applied.

The degree of accuracy necessary in reading the elongation depends upon the magnitude of elongation obtained, which in turn depends upon the length of strand tensioned. The load corresponding to the error of measurements should not exceed ½% of the final load. On this basis, measurements to the nearest ⅛ in. (3 mm), which should correspond to maximum errors of approximately $\frac{1}{16}$ in. (2 mm), are satisfactory for casting beds 150 ft. (50 m) in length and longer. If shorter beds are encountered, the Producer shall make the measurements to the nearest $\frac{1}{16}$ in. (2 mm).

The procedure of measuring elongations shall be conducive toward the attainment of accuracy. Reference marks may be made with a suitable pencil and shall show adequate contrast against the strand and form a sharp demarcation to ensure accuracy of readings. In placing the marks after preloading, care shall be taken that the strand is not turning and that the mark can be seen by a person standing upright. Care should be taken that any roughness of the face of the strand anchorage that may exist around the holes through which the strands are threaded does not adversely affect the accuracy of measurement.

The point to which the strand theoretically should elongate under the load to be applied, as well as the plus and minus tolerances from that point, should be indicated by fine transverse lines drawn across the rule. A variation in color, as, for example, white for the rule, red for the elongation mark, and blue for tolerance marks, has been found advantageous. The Producer shall adjust position when measuring elongations so that readings without parallax are obtained.

2.2.8 Elongation and Tensioning Corrections, and Maximum Strand Over-Pull

(1) Losses. The inherent losses of prestress, that is, those that occur by reason of creep and shrinkage of the concrete and relaxation of the prestressing steel, are considered and compensated for in the design of the beams. However, losses that are incidental to the operations of tensioning vary between casting beds and may vary between tensioning periods. These incidental losses shall be determined and satisfactorily compensated or corrected for during the tensioning of the strands. In correcting for operational losses, the term "loss" shall be understood to have reference to any condition that necessitates an algebraic addition to the elongation and, in several cases, the pulling force that is computed on the basis of theoretical mechanics and empirical observations. Such losses include, but are not limited to, those that are due to live and dead end seating of strands, movement of strand anchorages under load, and those that are due to the difference in the temperature of the strands between the time of tensioning and the time bond is developed with the concrete.

(2) Maximum Strand Over-Pull. The Department and AASHTO do not permit strands to be tensioned beyond 80% of their minimum specified tensile strength, either permanently or temporarily. Over-pulling of strands beyond the design load (in combination with elongation corrections) is typically required to compensate for Group I losses (see Section 2.2.9) which include live end seating, anchorage movement, thermal effects, shortening of self-stressing beds/forms, etc. Prior to tensioning, calculations shall be performed by the Producer to ensure that the additive combination of all required over-pulls (plus the design load) will not exceed 80% of the minimum tensile strength of the strands at any time before the concrete is poured. Depending on the specific situation, an accurate assessment of whether a strand or strands may be pulled beyond the allowable limit can be a complex task. As such, Producers should use the Department's prestressing spreadsheets for calculating required corrections for elongations and tensioning forces for this determination because it simultaneously accounts for all potential sources of over-pull from the time of tensioning up until the concrete is poured.

(3) Live and Dead End Seating. Strand vises shall be of a design that will permit no slippage after the tensioning is completed. However, some slippage will occur while strands are being tensioned and are seating after release of load at the live end. Dead end seating is considered a Group II loss while live end seating is considered a Group I loss (see Section 2.2.9). Slippage of the order of ¼ in. (6 mm) to possibly as much as ½ in. (12 mm) is typically expected with strand vises currently used. Regardless of magnitude, Producers should always compensate for dead and live end seating for day-to-day tensioning operations. At least annually, Producers shall also check or calibrate values for the expected slippages using the Departmental calibration spreadsheet for dead and live end seating. The QC Manager shall sign and submit the calibration report from the spreadsheet to the District or Bureau responsible for inspection. However, these calibrated values may or may not always be reliable during day-to-day tensioning operations. As such, Producers shall regularly observe the actual live end slippage and spot check dead end slippage during tensioning and make any further adjustments as are indicated. If the slippage from strand to strand should become excessively inconsistent, the grips within the strand vises should be replaced.

To indicate slippage that may occur after tensioning, a reference mark shall be established on each strand a uniform short distance from the strand vise face of each anchorage immediately after the bed has been tensioned. Since some time may elapse between tensioning and fabrication of the beams and pencil marks may become obliterated, reference marks for checking slippage after tensioning should be made with a band of suitable adhesive tape, such as masking tape, around each strand.

All strands shall be checked for added slippage at the anchorages immediately before the concrete is placed. If slippage of any strand is found that affects the final load on that strand by more than ½%, the strand or strands shall be re-tensioned.

(4) Rotation of Strands. In single strand tensioning, there exists a tendency for the jacking ram to rotate and, to some degree, unwind the strand. This will affect an apparent change of the modulus of elasticity of the strand such that the measured elongation does not correspond to the modulus used in calculating the applied load. Rotation of more than ½ revolution of the jacking ram during tensioning shall be prevented.

(5) Movement of Anchorages. The loads on the tensioned strands unavoidably produce some movement of the anchorages. Depending upon the construction of the anchorages, various conditions may contribute to this movement, such as deflection of

the anchorages as cantilevers, shortening of the casting bed, transverse deflection of strand grillages and perhaps others.

Anchorage movement during strand tensioning operations requires a correction be made to the elongation and pulling force and is considered a Group I loss (see Section 2.2.9). An identical correction is made for each strand. However, once final tensioning is completed for all strands in a beam, the initial strands are “under-pulled” and the final strands are “over-pulled”. This is because the anchorages move with each successive single strand tensioning operation. The average correction for all the under-pulled and over-pulled strands is approximately zero for anchorage movement after all the strands have been tensioned.

Producers shall annually make measurements to determine how much anchorages move on beds for a range of strand patterns according to the calibration procedure outlined in Appendix A and the Departmental spreadsheet for calibration of anchorage movements. The QC Manager shall sign and submit the calibration report from the spreadsheet to the District or Bureau responsible for inspection.

Anchorage movements shall be measured at the level of the uppermost row of strands in the bottom slab of deck beams and at the top of the vertical dimension of the bottom flange for I-beams, Bulb T-beams, and IL-beams. This provides a reasonable approximation of the center of gravity for most strand patterns. Unless other satisfactory and more convenient methods are available, the movements shall be determined by measuring, before and after tensioning, the horizontal distance from each anchorage to a fixed point, which may consist of a rod driven solidly into the ground behind each anchorage at a location that will not be influenced by forces exerted during tensioning.

Even if the combined movements for the anchorages are less than $\frac{1}{16}$ in. per 100 ft. (2 mm per 30 m) of strand length for a particular strand pattern, Producers should still compensate for these movements during tensioning operations. The Department’s prestressing spreadsheets used for determining corrections to pulling force and elongations as well as the Departmental calibration spreadsheet facilitates incorporating these corrections into day-to-day tensioning operations without undue burden.

(6) Thermal Effects. Since tensioned strands are held at a fixed length, temperature variations produce changes in the strand stresses. A difference in temperature between the time of tensioning and the time when the strands attain the temperature of the concrete placed around them will result in either reduction or increase of the strand stresses, depending upon whether the temperature differential causes elongation or contraction of the strands. Thermal effects are considered a Group I loss (see Section 2.2.9).

Theoretically, the temperature of the concrete at the time the bond with the strands becomes effective should be considered rather than that of the concrete mixture during placement. However, the time when this occurs is indeterminate, and the error introduced by considering the temperature of the mixture is believed to be insignificant. The temperature of the concrete at the time of placing, therefore, shall be considered the temperature that the strand attains.

When the differential temperature between the strands (i.e. ambient air temperature) at the time of tensioning and the concrete during placement exceeds 25° F (14° C), a thermal correction is required to be made for the amount the strands would expand or

contract. However, Producers have the option to correct for temperature differentials whenever strands are tensioned at a lower temperature than the expected temperature of the poured concrete. The Department's prestressing spreadsheets used for determining all corrections for elongation and pulling force allows Producers to choose from either the required or permitted option for thermal corrections.

Table 1 below provides information on permissible temperature ranges of the concrete during placement versus ambient temperature at the time of strand tensioning when no thermal correction is applied.

Table 1. No Thermal Correction for Strand Tension

English			
Ambient Temp. at Time of Tensioning (°F)	Max. or Min. Concrete Temp. for 25°F Differential (°F)	Permissible Concrete Temp.	
		Low (°F)	High (°F)
10	35	NA	NA
20	45	NA	NA
30	55	50	55
40	65	50	65
50	75	50	75
60	85	50	85
70	45 or 95	50	90
80	55	55	90
90	65	65	90
100	75	75	90

Metric			
Ambient Temp. at Time of Tensioning (°C)	Max or Min Concrete Temp. for 14°C Differential (°C)	Permissible Concrete Temp.	
		Low (°C)	High (°C)
-12	2	NA	NA
-7	7	NA	NA
-1	13	10	13
4	18	10	18
10	24	10	24
16	30	10	30
21	7 or 35	10	32
27	13	13	32
32	18	18	32
38	24	24	32

Table 2 below provides information on permissible temperature ranges of the concrete during placement versus ambient temperature at the time of strand tensioning when a thermal correction is applied (in %). Temperature corrected strands will have the design tension only when they reach the assumed concrete temperature. As such, a greater range of concrete mix temperatures is permissible during placement operations when ambient temperatures are either hot or cold and strands are thermally corrected. It should be noted, however, that at no time shall strands be tensioned if the ambient temperature is below 10° F (-12° C), and thermal corrections are discouraged when the ambient temperature at the time of tensioning is significantly greater than the expected temperature of the concrete when it is poured.

Table 2. Thermal Correction for Strand Tension

English						
Ambient Temp. at Time of Tensioning (°F)	Percent Thermal Correction (%)	Assumed Concrete Temp. (°F)	Assumed Concrete Temp. ± 25°F		Permissible Concrete Temp.	
			Low (°F)	High (°F)	Low (°F)	High (°F)
10	5	64	39	89	50	89
20	5	74	49	99	50	90
30	4	74	49	99	50	90
40	3	73	48	98	50	90
50	2	72	47	97	50	90
60	1	71	46	96	50	90
70	0	70	45	95	50	90
80	-1	69	44	94	50	90
90	-2	68	43	93	50	90
100	-3	67	42	92	50	90

Metric						
Ambient Temp. at Time of Tensioning (°C)	Percent Thermal Correction (%)	Assumed Concrete Temp. (°C)	Assumed Concrete Temp. ± 14°C		Permissible Concrete Temp.	
			Low (°C)	High (°C)	Low (°C)	High (°C)
-12	5	18	4	32	10	32
-7	5	23	9	37	10	32
-1	4	23	9	37	10	32
4	3	23	9	37	10	32
10	2	22	8	36	10	32
16	1	22	8	36	10	32
21	0	21	7	35	10	32
27	-1	21	7	35	10	32
32	-2	20	6	34	10	32
38	-3	19	5	33	10	32

In determining the correction to be applied to the load and elongation for each strand, the length of strand to consider shall be the distance between the ends of each anchor. The coefficient of expansion of the steel shall be taken as 0.0000065 in./in. per °F (0.0117 mm/m per °C) of temperature differential. If the thermal

correction to be applied to the load exceeds 5%, or the total correction associated with thermal effects and other applicable Group I losses (see Section 2.2.9) will cause any strands to be over-pulled beyond 80% of their minimum specified tensile capacity, the tensioning operations shall be deferred until a more favorable ambient temperature prevails.

When a temperature correction is made, casting shall begin within 3-days, or before the total correction associated with applicable Group I losses will cause any strands to be over-pulled beyond 80% of the minimum specified tensile capacity, whichever occurs first. If the 3-day time period governs for casting, it may be extended with the approval of the Inspector. It should be noted that all the conditions outlined above are automatically checked by the Department's prestressing spreadsheets used for determining corrections for elongation and pulling force.

(7) Strand Splices. The splicing of strands by suitable means will be permitted. Only one splice shall be allowed on any one strand length between abutments, and its location shall be such that it will not fall within a beam. In the case of single strand tensioning, since the slippage of individual splices can be checked and correction made for excessive slippage, the number of strands that may be spliced is not restricted. Though strands from only one source may be used in any one tensioning operation, there is a possibility that variation in manufacture may exist and care should be taken that the direction of twist of the wires is the same in the strands spliced.

Slippage of strand splices shall be compensated for in elongation measurements only and is considered a Group II loss (see Section 2.2.9). The slippage at all splices shall be checked by measurements between appropriate reference marks. If unusual slippage occurs that will not be compensated for, the Producer shall contact the Department.

(8) Remnant Strands. Strands that have previously been tensioned one time may be used providing that they are properly identified, clean, free of vice nicks or other damaged areas, and have attained the computed elongation when re-tensioned. Strands from different manufacturers in the same bed will not be allowed.

(9) Wire Breaks in Strands. Occasionally, during the tensioning operation, wires in the strand will break. The Producer shall check the bed after tensioning. The number of wire breaks permitted to remain on prestressed concrete beds having the following quantities of strands is:

Less than 27 strands	-	none
27 to 53 strands	-	one
54 to 80 strands	-	two
81 or more strands	-	three

The occurrence of more than the permissible number of wire breaks in any particular strand pattern (as shown above) or the occurrence of more than one broken wire in any individual strand will require that the strand or strands be removed and replaced. Permissible wire breaks shall be located, and the ends securely tied to the strand with wire. When a strand contains a wire that has broken during tensioning, it should be

pulled to the same elongation as strands with no broken wires, but not on the same load. Theoretically, the elongation should be obtained with approximately 86% of the load required for whole strand because the effective cross-sectional area is reduced by about 14%. The permissible wire breaks reflect a reduction in tensioning force for a strand pattern of about ½%.

If a strand is stressed to the full required load and locked in placed, and at a later time, one wire has broken, it is not necessary to reconnect the tensioning device in order to reduce the load. However, if a broken wire found at a later time results in the maximum number of wire breaks to be exceeded, then the strand shall be removed and replaced. This is a dangerous process because a higher load typically is required to be placed on the strand in order to release the grip of the chuck. The Producer shall take appropriate safety measures whenever performing this operation.

(10) Strand Debonding. To reduce the potential for beam end cracking due to high internal stresses, the bottom (non-harped) strands may be detailed on the contract plans to be partially debonded. Debonding shall be achieved by wrapping the ends of the strands with sheathing. The sheathing shall be a flexible PVC closed, tubular type (i.e. without a slit along its length) a minimum 0.025 in. (25 mils) thick. The inside diameter of the sheathing shall be 0.025 to 0.14 inches (25 to 140 mils) greater than the outside diameter of the strand. After strands are fully tensioned, the sheathing ends shall be sealed by either tying with wire or using a suitable material, such as silicone sealant.

In order to measure the extent of debonding, strands shall be marked at a known distance from the end of the beam to measure the amount of retraction after cutting. Other methods to determine the extent of debonding may be considered with the approval of the BBS. Debonding measurements may be required by the Department if there is a concern.

The extent of debonding can be estimated based on the anticipated retraction of the debonded strands as a portion of the total net corrected elongation (e_{CN}). The portion is the ratio of the total length of debonded strand (including distance between end of beam and anchorage) to the total bed length (i.e., strand length between anchors).

(11) Self-Stressing Forms. The shortening of self-stressing forms during strand tensioning operations requires a correction be made to the elongation and pulling force and is considered a Group I loss (see Section 2.2.9). An identical correction is made for each strand. However, once final tensioning is completed for all strands in a beam, the initial strands are “under-pulled” and the final strands are “over-pulled”. This is because the bed shortens with each successive single strand tensioning operation. The average correction for all the under-pulled and over-pulled strands is approximately zero for form shortening after all the strands have been tensioned.

Producers shall annually determine the calibration factor between predicted (theoretical) and actual form shortening for a range of strand patterns according to the calibration procedure outlined in Appendix A and the Departmental spreadsheet for calibration of beds with self-stressing forms. The QC Manager shall sign and submit the calibration report from the spreadsheet to the District or Bureau responsible for inspection.

Before a bed with self-stressing forms is first used to cast beams for a Departmental project, an Illinois Licensed Structural Engineer (IL SE) shall submit one set of initial calculations for review and approval to the Bureau of Bridges and Structures showing that any over-pulled strand will not exceed 80% of the specified minimum tensile strength prior to seating (considering all possible over-pulls). Appendix A, the Department's prestressing spreadsheets used for determining all corrections for elongation and pulling force, and the Departmental spreadsheet used for calibration of beds with self-stressing forms should be employed by the IL SE to facilitate these calculations. The Inspector shall also verify in the field the actual form shortening during a calibration procedure before a bed with self-stressing forms is used for the first time to cast beams for a Departmental project.

2.2.9 Methods, Nomenclature & Formulas for Computing Elongations, Tensioning Forces, Corrections and Calibrations

(1) General. The Producer shall be thoroughly familiar with the methods and formulas for computing strand elongations, elongation and tensioning corrections, and the procedures for calibration. It shall be the responsibility of the Producer to perform and document these calculations according to the methods and procedures provided in the Department's prestressing spreadsheets, the Departmental calibration spreadsheets, and Appendix A. The Departmental spreadsheets can be found under "References" and "Guides/Spreadsheets" at the following link: http://www.idot.illinois.gov/doing-business/material-approvals/precast-prestress/index. Embedded links for each spreadsheet are included as follows:

General Prestressing
IL-Beams Prestressing Spreadsheet
Anchorage Movement Calibration
Self-Stressing Bed Calibration
Live and Dead End Seating Calibration

A summary of the general spreadsheet in combination with pertinent guidance and discussions concerning loss determinations is provided below, along with relevant nomenclature and formulas. A detailed description of the more complex required calibration procedures is given in Appendix A. The IL-Beam prestressing spreadsheet is a version of the general prestressing spreadsheet modified specifically for IL-beams, and thus, the following discussion largely applies to it as well.

The general Departmental spreadsheet contains several reports or "tabs" that deal with prestressing only. Other tabs are used for recording concrete mix information, measured beam dimensions, etc. Prints of the reports from the general spreadsheet can be found in Appendix A. The tabs that deal with prestressing only include:

1. Elongation Computations for Single Strand Tensioning (Singlet Elongations)
2. Force Pulling Computations for Single Strand Tensioning (Singlet Forces)
3. Field Tensioning Report for Deck Beams (Box Tensioning)
4. Field Tensioning Report for I- and Bulb T-Beams (Ibeam Ten)
5. Correction for Anchorage Movement Effects (Anchorage Movement)
6. Correction for Self-Stressing Bed Effects (Self-stressing Beds)
7. Correction for Thermal Effects (Thermal)

The Singlet Elongation and Force reports summarize and tabulate the basic strand elongation and tensioning computations along with the required corrections to be applied for a particular project. The Field Tensioning reports for Deck, I- and Bulb T-beams are used to record actual measured strand elongations. The Correction reports for Anchorage Movement, Self-Stressing Beds, and Thermal compute the required adjustments in elongations and pulling forces that should be made to account for these effects.

Basic straight strand elongation, tensioning and correction computations are also applicable for draped strands in a beam that are not longer than 1.002 times the length of the straight strands. When the ratio of draped length to straight strand length exceeds 1.002, separate elongation, tensioning and correction computations are required. In all cases, the ratio of draped strand length to straight strand length should be recorded in the Department's prestressing spreadsheet.

Corrections for operational losses are generally considered to fall into two groups, I and II.

Group I losses consist of those that require corrections to be made to elongations and pulling forces. It is possible for some Group I losses to only be temporary as opposed to permanent. An example is live end seating in single strand tensioning. The required over-pull and corresponding added elongation are reduced back to a zero correction state for this effect once the jacking load is released and the strand is seated. Other Group I losses include those associated with thermal effects, anchorage movements and self-stressing beds.

Group II losses consist of those that require a correction to elongation only. For example, the elongation of a spliced strand under load consists not only of its true elongation, but also of additional elongation due to tightening and seating of the splice. This additional elongation has no effect on the load but shall be taken into account in measuring the strand elongation. Dead end seating is another example of a Group II loss.

Losses that affect only a very small number of strands in relation to the total number of strands shall be noted separately in the appropriate report (e.g. Field Tensioning), and the Producer shall make the necessary corrections for such strands individually as they are being tensioned.

When significant uncertainties or unusual circumstances arise concerning determination of appropriate corrections, the Producer shall jointly consult with the BBS, Central Bureau of Materials, and District responsible for inspection.

(2) Nomenclature.

A_B = Cross sectional area of bed (form) – in.^{2} (mm^2)
A_s = Cross-sectional area of steel in one prestressing strand – in.^{2} (mm^2)
a = Coefficient of thermal expansion for steel – in./in. per °F (mm/m per °C)
CF_{SB} = Calibration factor for a self-stressing bed/form
CF_{SBi} = Calibration factor for 1 strand pattern for a self-stressing bed/form
E_B = Modulus of elasticity of bed – psi (kPa)
E_s = Modulus of elasticity of strand – psi (kPa)
e = Basic strand elongation without corrections – in. (mm)

e_I = Total elongation correction for Group I losses per strand – in. (mm)
e_{II} = Total elongation correction for Group II losses per strand – in. (mm)
e_{am} = Total elongation correction for anchorage movement per strand – in. (mm)
e_{CG} = Total gross corrected elongation per strand – in. (mm)
e_{CN} = Total net corrected elongation per strand – in. (mm)
e_D = Elongation correction due to dead end seating per strand – in. (mm)
e_L = Elongation correction due to live end seating per strand – in. (mm)
e_{OI} = Elongation correction due to other (Group I) per strand – in. (mm)
e_{OII} = Elongation correction due to other (Group II) per strand – in. (mm)
e_{ps} = Loss per strand due to anchorage movement – in. (mm)
e_{sb} = Total elongation correction for self-stressing bed per strand – in. (mm)
e_{SP} = Elongation correction due to strand splice per strand – in. (mm)
e_{ss} = Loss per strand due to bed shortening (self-stressing bed) – in. (mm)
e_t = Elongation correction due to temperature per strand – in. (mm)
F_{si} = Specified stress in prestressing strands after seating in anchorage as shown on the plans – psi (kPa)
F_u = Minimum specified tensile strength of strand – psi (kPa)
L (L_S) = Bed Length (strand length between anchors) – in. (mm)
L_B = Form (bed) length – in. (mm)
M_T = Total anchorage movement – in. (mm)
$M_{T(m)}$ = Measured total anchorage movement – in. (mm)
N_d = Number of draped strands
N_s = Total number of strands
P_{am} = Force correction for anchorage movement per strand – lb. (N)
P_B = Total design compressive force (in bed/form) – lb. (N)
P_i = Design plan load – lb. (N)
P_{i+T} = Total corrected pulling force per strand – lb. (N)
P_L = Force correction for live end seating per strand – lb. (N)
P_{max} = Maximum permitted pulling force for a strand (80% F_u A_s) – lb. (N)
P_{OI} = Force correction due to other (Group I) per strand – lb. (N)
P_p = Preload – lb. (N)
P_S = Total design pulling force (in strands) – lb. (N)
P_{sb} = Force correction for self-stressing beds per strand – lb. (N)
P_T = Total force correction for Group I per strand – lb. (N)
P_t = Force correction for thermal per strand – lb. (N)
p_{am} = Estimated force correction for anchorage movement per strand – lb. (N)
p_{sb} = Theoretical force correction for self-stressing beds per strand – lb. (N)
S_B = Total bed shortening – in. (mm)
$S_{B(m)}$ = Measured total bed shortening for 1 strand pattern – in. (mm)
T = Change in temperature (T_2-T_1) – °F (°C)
T_1 = Air (Strand) temperature at time of tensioning – °F (°C)
T_2 = Estimated temperature of concrete at placement – °F (°C)
T_{min} = Minimum permitted temperature – °F (°C)
T_Δ = Maximum permitted temperature change – °F (°C)
ΔL_B = Theoretical total bed shortening – in. (mm)
Δ_{am} = Estimated total elongation correction for anchorage movement per strand – in. (mm)
Δ_{ps} = Estimated loss per strand due to anchorage movement – in. (mm)
Δ_{sb} = Theoretical total elongation correction for self-stressing bed per strand – in. (mm)
Δ_{ss} = Theoretical loss per strand due to bed shortening (self-stressing bed)
Δ_T = Estimated total anchorage movement – in. (mm)

(3) Methods and Formulas. Typically, the values for A_s and E_s should be those suggested by the strand manufacturer for the reel/spool. For cases in which multiple reels/spools are used in one tensioning operation, it is permissible to average the suggested values for each reel/spool used.

a. Basic Elongation Equation. The uncorrected elongation less the elongation due to the preload.

$$e = \frac{(P_i - P_p)L}{A_s E_s} \quad \text{in. (mm)}$$

The specified design plan load (P_i) for a strand is read directly from the design plans and the preload (P_p) is determined by the Producer (see also Section 2.2.3).

b. Corrected Gross Elongation. Basic Elongation plus additional corrected elongations due to Group I and Group II losses.

$$e_{CG} = e + e_I + e_{II} \quad \text{in. (mm)}$$

The corrected gross elongation includes the temporary elongation from live end seating.

c. Corrected Net Elongation. Basic Elongation plus additional corrected elongations due to Group I and Group II losses less the loss from live end seating.

$$e_{CN} = e + e_I + e_{II} - e_L \quad \text{in. (mm)}$$

The corrected net elongation excludes the temporary elongation from live end seating.

d. Elongation Correction Due to Group I Losses. Effects include live end seating, thermal, anchorage movement, self-stressing beds, and other.

$$e_I = e_L + e_t + e_{am} + e_{sb} + e_{OI} \quad \text{in. (mm)}$$

e. Elongation Correction Due to Group II Losses. Effects include dead end seating, strand splices, and other.

$$e_{II} = e_D + e_{SP} + e_{OII} \quad \text{in. (mm)}$$

f. Corrected Pulling or Tensioning Force Per Strand. Design tensioning force plus all corrections due to Group I effects.

$$P_{i+T} = P_i + P_T \quad \text{lb. (N)}$$

g. Pulling or Tensioning Force Correction Per Strand Due to Group I Losses. Effects include live end seating, thermal, anchorage movement, self-stressing beds, and other.

$$P_T = P_L + P_t + P_{am} + P_{sb} + P_{OI} \quad \text{lb. (N)}$$

h. Maximum Permitted Pulling or Tensioning Force. Based upon specification that strands shall not be tensioned past 80% of their minimum specified tensile strength.

$$P_{max} = 0.80 \times F_u \times A_s \quad \text{lb. (N)}$$

i. Maximum Permitted Temperature Change. The formula calculates the maximum permitted difference in temperature from the time the strands were tensioned until the concrete is poured.

$$T_{\Delta} = \frac{P_{max} - (P_{i+T} - P_L)}{a \times E_s \times A_s} \quad °F\ (°C)$$

The formula should typically be used for cold weather concreting. T_{Δ} implies how many degrees colder the tensioned strands can be without exceeding P_{max}.

j. Minimum Permitted Temperature. The formula calculates the minimum temperature permitted from the time the strands were tensioned until the concrete is poured.

$$T_{min} = T_1 - T_{\Delta} \quad °F\ (°C)$$

The formula should typically be used for cold weather concreting. T_{min} implies the coldest temperature the tensioned strands can attain without exceeding P_{max}.

k. Anchorage Movement Correction Formulas. See also Appendix A.

Loss Per Strand. Actual movement of anchorages per strand tensioned.

$$e_{ps} = M_T / N_s \quad \text{in. (mm)}$$

Total Elongation Correction Per Strand. Actual correction to elongation.

$$e_{am} = M_T / 2 + e_{ps} \quad \text{in. (mm)}$$

Force Correction Per Strand. Required over-pull based upon basic mechanics.

$$P_{am} = \frac{E_s e_{am} A_s}{L} \quad \text{lb. (N)}$$

l. Self-Stressing Bed Correction Formulas. See also Appendix A.

Loss Per Strand. Actual shortening of forms/bed per strand tensioned.

$$e_{ss} = S_B / N_s \quad \text{in. (mm)}$$

Total Elongation Correction Per Strand. Actual correction to elongation.

$$e_{sb} = S_B / 2 + e_{ss} \quad \text{in. (mm)}$$

Force Correction Per Strand. Required over-pull based upon basic mechanics.

$$P_{sb} = \frac{E_s e_{sb} A_s}{L} \quad \text{lb. (N)}$$

m. Thermal Correction Formulas.

Loss Per Strand. Based upon basic thermal mechanics.

$e_t = a \times L \times T$ in. (mm)

Temperature Differential.

$T = T_2 - T_1$ °F (°C)

Force Correction Per Strand. Required over-pull based upon basic mechanics.

$P_t = \frac{E_s e_t A_s}{L}$ lb. (N)

n. Anchorage Movement Correction Calibration Formulas. See also Appendix A.

Estimated Loss Per Strand. Estimated actual movement of anchorages per strand tensioned.

$\Delta_{ps} = \Delta_T / N_s$ in. (mm)

Estimated Total Elongation Correction Per Strand. Estimated actual correction to elongation.

$\Delta_{am} = \Delta_T / 2 + \Delta_{ps}$ in. (mm)

Estimated Force Correction Per Strand. Estimated required over-pull based upon basic mechanics.

$p_{am} = \frac{E_s \Delta_{am} A_s}{L_S}$ lb. (N)

o. Self-Stressing Bed Correction Calibration Formulas. See also Appendix A.

Total Design Pulling Force

$P_S = P_i \times N_s$ lb. (N)

Total Compressive Force in Self-Stressing Forms

$P_B = P_S$ lb. (N)

Theoretical Total Bed/Form Shortening.

$\Delta L_B = \left(P_B / A_B \right) \times \left(L_B / E_B \right)$ in. (mm)

Theoretical Loss Per Strand. Theoretical shortening of forms/bed per strand tensioned.

$\Delta_{ss} = \Delta L_B / N_s$ in. (mm)

Theoretical Total Elongation Correction Per Strand. Theoretical correction to elongation.

$$\Delta_{sb} = \Delta L_B / 2 + \Delta_{ss} \quad \text{in. (mm)}$$

Theoretical Force Correction Per Strand. Theoretical required over-pull based upon basic mechanics.

$$p_b = \frac{E_s \Delta_{sb} A_s}{L_S} \quad \text{lb. (N)}$$

Actual Shortening for a Self-stressing Bed. Theoretical shortening times the calibration factor.

$$S_B = CF_{SB} \times \Delta L_B \quad \text{in. (mm)}$$

Calibration Factor for an Individual Strand Pattern.

$$CF_{SBi} = S_{B(m)} / \Delta L_B$$

SECTION 2.3 – RELEASE OF STRANDS

2.3.1 General

The prestressing force shall not be transferred (i.e. strands released) to the concrete until the appropriate cylinders (see Section 1.2.4) have attained the specified compressive strength. In addition, the release of the strands shall be accomplished while the concrete is still moist from curing. The beam shall be warm to the touch if steam curing is used. Concrete that is allowed to dry and cool after steam curing ends will contract. This contraction is restrained by the tensioned strands and may result in the formation of vertical and transverse cracks, unless the strands are released.

The Producer shall expeditiously initiate the release of strands. Crews shall quickly remove the tarps and forms on a bed and release the strands in an uninterrupted step-by-step operation without attending to production elsewhere (e.g. on another bed). The situation can become critical in cool weather, and special care shall be exercised to prevent damage to the beams. The covering may be raised at the beam ends sufficiently for the purpose of releasing the strands and again dropped to permit the beams to cool at the specified rate (see Section 3.3.4).

Pours on Friday that result in form removal and strand release on Monday are not recommended because of the increased risk for cracking.

Strands shall be released in a manner such that the energy is released gradually into the beam. Sudden release may result in cracking of the concrete. The general procedure is to cut the strands with a torch. Strands shall be heated using a heating tip with a low oxygen flame so that the metal gradually loses strength. The flame shall be played along the strand over a length of at least 6 in. (150 mm) at such a rate that the failure of the first wire in the strand shall not occur until a minimum of 5-seconds after heat is first applied.

Unrestrained camber in the beam during release of strands, especially from the initial release of hold-downs, may cause excessive cracks in the beam as well as excessive strain in the last few unreleased strands, causing them to snap. These adverse effects can be minimized by weights or vertical restraint applied over the beam. The Producer should consider these corrective measures in order to maintain a safe work environment and prevent damage to the concrete.

Prestressing strands for noise abatement wall posts, piling, and similar applications shall be trimmed 1 ± ⅛ in. (25 ± 3 mm) back into the concrete. A foam recess plug cast into the concrete shall be used to prevent spalling of the concrete when the strands are burned back with a torch. The dimensions of the foam plug shall be approved by the Engineer. The resulting hole shall be filled with an epoxy meeting ASTM C 881 Type IV, grade and class to meet conditions.

Extended prestressing strands for IL-beams shall be bent as shown on the plans. Heat- or cold-bending will be permitted. Other methods shall be approved by the Inspector.

Prestressing strands for all other applications shall be trimmed within ⅛ in. (3 mm) of the concrete, and the ends of the strands shall be given a coat of polyurethane sealant meeting Type S, Grade NS, Class 25, Use T or NT of ASTM C 920 or two coats of zinc dust spray or paint meeting the requirements of ASTM A 780. Coatings shall be applied before corrosion appears and according to the manufacturer's specifications. The zinc dust spray or paint shall

be allowed to dry according to the manufacturer's specifications prior to the application of the second coat. Care shall be taken to ensure extended prestressing strands for IL-beams are not coated.

2.3.2 Release Pattern

The release pattern shall be determined by the Producer and documented on the shop drawings. There are several factors the Producer shall consider when developing a release pattern for a particular beam. Some of these include:

1. Strands shall be released in a symmetrical pattern and in a manner that will create a minimum of eccentricity of the force acting upon the members.
2. The release of draped strands in relation to the release of straight strands to minimize damage or overstressing of the member.
3. Both ends of the bed and all intermediate termination of members throughout the bed shall be released simultaneously and symmetrically to minimize sliding of the members.
4. Items such as forms, ties, inserts or other devices that restrict longitudinal movement of the member shall be released or loosened to prevent damage.
5. PCI "Manual for Quality Control for Plants and Production of Structural Precast Concrete Products"- Division 5.

The Department's approval of the shop drawings acknowledges whether a strand release pattern was included. The effectiveness of the release pattern in achieving an acceptable product is the responsibility of the Producer.

DIVISION 3 – CONCRETE

SECTION 3.1 – CONCRETE MIXTURES

3.1.1 Concrete Mix Design

The mix design, submittal information, trial batch, and Engineer verification shall be according to Section 1020 of the Standard Specifications and as stated herein. According to Article 1020.05, it is the Producer's responsibility to design the mixture that will meet specifications. The Producer shall provide a 28-day mix design target strength. For information on mix design target strength, refer to 7.0 “Determining the Concrete Mix Design Target Strength” in the Portland Cement Concrete Level III Technician Course - Manual of Instructions for Design of Concrete Mixtures. For new mix designs, test information shall be provided to show the target strength can be met. For a previously verified mix design, if test results indicate the target strength can’t be consistently met, this will be justification to reject the mix design. However, target strength will not be used to declare a product unacceptable. An unacceptable product can only occur when the specified 28-day strength is not met (see Section 1.2.4).

Before the work begins, the Producer shall obtain approval from the Department regarding the proportions of the proposed materials. Coarse aggregate gradations shall be according to Table 1 of Article 1020.04 of the Standard Specifications. It is also the responsibility of the Producer to exercise quality control with respect to the mixture so that each batch of concrete will meet the requirements of the specifications.

The Producer shall consult with the Department as to the correction to be made of the measured air content by reason of the air contained within the aggregate particles. The accuracy of such correction shall be checked with sufficient frequency to ensure determination of reliable air content.

The air content shall be within the range of 5.0 to 8.0% and preferably should fall in the proximity of 6.5%. Any batch having air content outside of these limits shall not be used. However, in the case of low air content, if the Producer's practices permit, correction may be made by further addition of air-entraining admixture to the batch and subsequent effective mixing (typically 40 additional revolutions for a truck mixer). In the case of high air content, the Producer may, with the Inspector’s approval, add to the mixer non-air entraining portland cement in the proportion necessary to bring the air content within the specified limits, or the concrete may be further mixed, within the limits of time and revolutions specified, to reduce air content. Refer to Article 1020.08 for additional requirements.

The slump of the concrete shall be between 1 and 4 in. (25 mm to 100 mm). The maximum slump may be increased to 7 in. (175 mm) when a high range water-reducing admixture is used or to 8.5 in. (215 mm) when the high range water-reducing admixture is the polycarboxylate type.

If, after the start of placing concrete, the test results indicate that the batching and/or mixing equipment is not producing a uniform workable mix, operations shall be suspended after the completion of a beam until the causes have been determined and corrected.

3.1.2 Concrete Plant and Delivery Truck Operations

The concrete shall be central-mixed or truck-mixed. The stationary mixer or truck mixer and batching equipment shall be an integral part of the precast prestressed plant. Variations in plastic concrete properties shall be minimized between batches and shall include having the truck mixer discharge all wash water prior to batching the concrete materials or receiving concrete from a stationary mixer.

The plant shall be equipped with an automatic recording system capable of recording the quantity batched and the amounts of coarse and fine aggregates, cement, finely divided minerals (if applicable), water, admixture(s), time, and date of each batch. The Producer shall maintain batch records in the project files.

In the case of a breakdown in on-site concrete equipment, concrete from an off-site location may be used to complete casting of a product. The concrete plant and delivery trucks furnishing the concrete shall be approved according to the Department's Policy Memorandum, "Approval of Concrete Plants and Delivery Trucks."

3.1.3 Admixtures

The use of admixtures shall be according to Article 1020.05(b) of the Standard Specifications.

SECTION 3.2 – PLACING CONCRETE

3.2.1 General

Placing and consolidating of concrete shall be as specified in Article 503.07 of the Standard Specifications and as stated herein. In addition, for self-consolidating concrete pours, the maximum distance of horizontal flow from the point of deposit shall not exceed 15 ft (4.6 m). The placement operation shall be moved as required to ensure the leading edge of the flowing concrete does not exceed 15 ft (4.6 m). For a bed of beams, a single beam shall be completely filled with concrete before placement of concrete in the next beam. For deck beams with void tubes installed in place prior to the pour, the concrete shall be placed on one side of the void tube until the concrete flows completely under the void tube to the other side. Once this has been completed, the concrete placement operation may be moved to the other side. The Producer shall take measures to prevent leakage of concrete through openings in the bulkheads. The portions of the reinforcement bars that extend above the surface may be protected by plastic or other suitable wrappers during concrete placement to keep them free of concrete, or they shall be thoroughly cleaned after the concrete has been placed.

It is the Producer's responsibility to ensure the side forms, the bulkheads, and all items that are required to be incorporated into the concrete are accurately positioned and effectively secured so that they will remain at the required positions within the tolerances stipulated during the operations of placing and consolidating the concrete. The Producer shall correct immediately any irregularities observed in any phase of the manufacturing of the beams.

Reinforcement bars shall be furnished, stored, and installed according to Articles 508.01 to 508.06 of the Standard Specifications and as stated herein. The prevailing practice for placing and securing reinforcement is to preassemble bar and stirrup reinforcement into cages for convenient handling. The bars shall be fastened together according to Article 508.05. Worn tie wire guns shall be replaced. Extra tie bars shall be furnished as necessary for maintaining satisfactory integrity during handling and placing. Spot welding will be permitted for non-epoxy coated reinforcement where approved by the Engineer and according to Division 5.

Reinforcement bars shall be cut and bent at the mill, plant or shop according to Article 508.04 and to the shapes shown on the plans for fabrication of precast prestressed concrete products. Drive rolls on shear beds, and back-up barrels on benders shall be protected with a suitable covering to minimize damage during the fabrication process of epoxy coated reinforcement bars.

Patching and repair of cut, bent, or damaged epoxy coated reinforcement bars shall be according to Article 508.04. The epoxy repair cure time requirement is waived for the repair of the epoxy coating during placement of the top reinforcement cage, after the initial concrete lift, as part of the pouring sequence for deck beams.

To facilitate the construction of reinforcement cages and eliminate the possibility of floating bars, auxiliary bars may be included for tying reinforcement. Auxiliary bars (typically #3 bars) are added reinforcement, which are not part of the structural design. Auxiliary bars shall be epoxy coated if other reinforcement bars are epoxy coated.

Steel wire or straight rod may be used to secure void drains, dowel tubes, or other miscellaneous items provided the diameter is smaller than #3 reinforcement bar. Steel wire or straight rod shall be epoxy coated or galvanized if reinforcement bars are epoxy coated.

Depending upon the type of beam to be fabricated, the reinforcement may be placed either before or after the side forms are positioned. Welding shall not be performed near the strands, and sparks from the welding operations shall not be permitted to drop on the strands. During placement of the reinforcing, no items shall be thrown or permitted to drop on the tensioned strands, such as tools and other heavy or sharp metallic objects that may cause nicks in the wires of the strands. Ends of wires for holding reinforcement or other items in position shall be bent downward from the top and inward from the sides of the beam.

Elimination of sag of the strands, especially of those in the bottom row, is important in any case, but of special importance where the weight of the reinforcement is carried partially or entirely by the strands. For beam lengths in excess of 30 ft. (10 m), a suitable chair shall be placed at the midpoint of beams between the casting bed and the bottom row of strands to hold the strands in position. Chairs shall be placed at additional points and for shorter beam lengths, as necessary, when sag in the reinforcement assembly is observable. The chair height shall be such as to maintain the strands within the specified tolerance.

Chairs shall be of sufficient strength to hold strand or reinforcement in place. The chairs (supports) shall be according to Article 508.06, but plastic tipped chairs shall not be used to support black bars.

3.2.2 Weather Conditions

Concrete placement shall not begin at outdoor facilities during inclement weather. The Producer shall have adequate weather protection provisions accessible at all times for outside production activities. If the concrete placement operations are in progress when the adverse weather conditions occur, protective covering shall immediately be placed over all exposed concrete. If more than a trace amount of precipitation (as determined by the Inspector) is finished or incorporated into the fresh concrete, the product shall be declared unacceptable and a remedy proposal may be submitted.

Wind breaks are not required but are recommended in hot weather to protect the concrete from plastic shrinkage cracks. Fog spraying with water in hot weather is also recommended. Fogging will raise the humidity above the concrete surface and help prevent plastic shrinkage cracks. If fogging is performed, it is important that water not accumulate on the concrete surface.

Wind breaks are also recommended in cold weather to protect the concrete from freezing.

Concrete shall not be placed at ambient temperatures below freezing, unless there is adequate assurance that the organization of the work and the facilities available are such that the work will be completed and steam or supplemental heat is applied before damage to the concrete occurs from freezing. The concrete shall be delivered at the forms at a temperature not less than 50°F (10° C) nor more than 90° F (32° C). However, this range may be less based on the provisions of Section 2.2.8(5). The initial concrete temperature should be maintained as nearly as possible during the pour. Concrete placement shall not begin when the ambient temperature is below 25° F (-4° C) with the forms and concrete protected from the wind. If the forms or concrete are exposed to wind, wind speed in combination with ambient air temperature shall govern as shown in the table below.

Ambient Air Temperature	Maximum Wind Speed
40° F (4° C)	36 mph (58 Km/hr)
35° F (2° C)	18 mph (29 Km/hr)
32° F (0° C)	12 mph (19 Km/hr)
30° F (-1° C)	10 mph (16 Km/hr)
25° F (-4° C)	0 mph (0 Km/hr)

Wind speed should be measured at the pour location with an anemometer provided by the Producer or at the closest official weather station as approved by the Inspector. Information on wind speed and the closest official weather station can be found at: http://www.noaa.gov/index.html. If concrete becomes frozen at any time after placement and before the concrete has attained a compressive strength of 500 psi (3450 kPa), the Producer shall reject the product and no remedy proposal will be accepted. (Note that ice crystal imprints are a good indication the concrete froze before attaining a compressive strength of 500 psi (3450 kPa). A 2-power handheld lens may be needed to see these imprints.) If the concrete is subjected to more than one freeze/thaw cycle before it has attained a compressive strength of 3500 psi (24130 kPa), the Producer shall reject the product and no remedy proposal will be accepted.

It shall be noted that as the wind speed increases, it will take less time to cool the concrete to ambient air temperature. In addition, it shall be noted that regardless of the wind speed, the coldest that the concrete can get is ambient air temperature. The important reason for mentioning these two facts is that exposing concrete to the wind in cold weather for an extended period of time should be avoided. The non-uniform concrete temperature throughout the product, especially near the concrete surface, will cause the overall concrete strength in the product to be less uniform.

3.2.3 Vibration of Concrete

Vibrators shall conform to the requirements of Article 504.03 of the Standard Specifications. The Producer shall note the special requirements for hand vibrators in Article 1103.17(a) of the Standard Specifications when epoxy coated reinforcement is used in beams; however, a vibrator with a non-metallic head may be coated by someone other than the manufacturer, if approved by the Inspector. External vibration may be used in conjunction with internal vibration, if approved by the Inspector. The Producer's QC personnel shall observe the placing and consolidation of the concrete. The use of the vibrators should receive particular attention. The vibration shall be sufficient for complete consolidation. However, excessive vibration may cause segregation in the mixture. Carelessness in performance of the work, such as permitting vibrators to remain stationary in the concrete for a period longer than required to adequately consolidate, shall be guarded against. Care shall be taken to avoid seams or cold joints between successive layers of concrete. It is essential that the operations proceed at a rate sufficiently fast to avoid excessive time intervals between the placement of successive layers and that, during the vibration of each layer, the vibrating element is caused to penetrate slightly into the preceding layer.

3.2.3.1 Cold Joint in Hardened Concrete

A cold joint is visible as a distinct and separate layer in hardened concrete. It occurs when there has been a delay in placing a subsequent lift of concrete. The lift may have been vibrated, but not sufficiently to combine it with the previous lift. Good concrete delivery and consolidation practices will prevent this problem.

In the case of equipment breakdown and a long delay before operations are resumed, it may be possible to prevent a cold joint by periodically vibrating the concrete. The time interval for vibrating the concrete should be 15 minutes or less, depending on field conditions. If possible, cover the concrete with wet burlap or cotton mats between intervals. Be careful to not vibrate so much that the concrete segregates. Vibration shall stop if there is any indication the concrete is beginning to get firm. If this occurs, it is probably too late to prevent the cold joint.

The Inspector is advised that discoloration between lifts of concrete is not always an indication of a cold joint. For example, a discoloration may occur due to a different water/cement ratio. A mix with a relatively higher water/cement ratio will typically be lighter in color. A discoloration may also be caused by the condition of the forms or amount of form release applied to the forms.

3.2.3.2 Fold From Self-Consolidating Concrete

A fold resulting from self-consolidating concrete is identified by the visible line between concrete lifts and is very similar to a cold joint. A fold is the result of the thixotropic nature of SCC. Thixotropy is a liquid state when stirred or shaken that returns to a hardened state when left standing. In the case of SCC, the concrete starts out very fluid and will subsequently “stiffen” very soon after placement. Excessive time between concrete lifts will produce a poor bond between each layer of placed concrete. Therefore, it is very important to rod the SCC with a piece of lumber or conduit when the concrete has lost its fluidity. A vibrator used in a manner that does not cause the coarse aggregate to separate from the mortar may also be used to restore fluidity.

3.2.3.3 Mix Foaming

Mix foaming or other detrimental material may be observed during placement or at the completion of a self-consolidating concrete pour. In this case, the material may be removed while the concrete is still plastic.

Mix foaming is an indication that the self-consolidating concrete is not cohesive (or stable) and may have excess water.

3.2.4 Deck Beams

The following items shall be considered for all deck beams.

(1) Tie Rod Tubes. Tie rod tubes are placed in transverse direction at beam diaphragms, as shown on the plans, to accommodate plain round tie rods that are threaded on both ends. PVC tie rod tubes should remain in place after fabrication and their inside diameter shall match that specified on the contract plans.

(2) Dowel Bar Tubes. When required, two tubes are placed in vertical position at beam ends to form holes to accommodate dowel bars. PVC dowel bar tubes should remain in place after fabrication and their inside diameter shall match that specified on the contract plans.

(3) Inserts for Guardrail Posts in Curb Beams. Inserts shall be positioned according to the plans. They shall be securely held in place by suitable means.

(4) Highly Skewed Beams. Deck beams with large skews have a tendency to develop cracking at the acute corners of the beam. In order to prevent this cracking, the Producer may square off the sharp corner (called a point block) on deck beams with skews greater than or equal to 25 degrees. See “Point Block Detail” in Appendix A. Whenever a Producer elects to use point blocks, they shall be shown on the shop drawings. Also, the Producer should inform the Contractor, as it may require extra forming.

(5) Lift Pours. Concrete temperature, ambient temperature, use of retarder, time between lifts, etc. shall be carefully considered to avoid a cold joint for lift pours that involve the placement of the top reinforcement cage after the initial lift of concrete. When concrete for more than one (1) beam at a time is poured, the Producer shall record the elapsed time between the beginning of the bottom and top pours. See also Sections 3.2.6, 3.2.7 and 3.5.5.

3.2.5 Features Common to Deck Beams with Void Tubes

(1) General. During the fabrication of deck beams with void tubes, the Producer shall check the thickness of the bottom layer of concrete before the void tubes are placed in lift pour construction described in Section 3.2.4 (5). It is also necessary that the position of the voids be checked during casting or means provided so that the position of the voids is ensured. Voids can be held in position by use of templates or spacer studs which are removed after placing the concrete. Discrepancies found shall be corrected. In the case of cylindrical void tubes, difficulty will be encountered if the holes in the side forms are not in line with the horizontal diameter of the void tubes with relation to the side forms during the progress of the work. The Producer shall observe and correct the spacing between the tubes, especially when more than two rows are used.

The thickness of the layer of concrete over each void tube in deck beams shall be checked as soon as the surface is finished at sufficiently close intervals to discover possible dislocations of the tubes during placement of the concrete. When measurements indicate that the thickness of the concrete is outside the allowable tolerance, additional measurements shall be made to discover the limits of the area. The Producer shall note the locations of such areas. Any beam in which the thickness of the concrete areas above one or more void tubes does not fall within the tolerance stipulated in Section 1.2.4 shall be rejected by the Producer and no remedy proposal will be accepted.

The Producer shall have available suitable gauges or probes for making the measurements. A suitable probe for checking the thickness of concrete above the void tube can be made of a piece of fabric reinforcing, utilizing a length of the W5.5 wire with a cross-piece of W2.5 wire. The distance below the cross-piece is made equal to the

required thickness of concrete. The wire above the cross-piece may be bent into a handle. A similar probe may be used for checking the thickness of the bottom layer, though the cross-piece may be replaced with a circular disc, and a longer handle above the disc would be advantageous. Probes shall be regularly checked for wear. Measurements of the distance between the side forms and void tubes require information as to the thickness of the metal in the form and may be made with any suitable probe.

Cavities left from removal of templates shall be effectively repaired. In no case shall deck beams be finished to a higher elevation or be provided with a slight crown for the purpose of providing sufficient cover over void tubes or reinforcing bars that have been displaced during consolidation of the concrete.

(2) Void Tubes. Void tubes shall be cellular polystyrene, according to ASTM C 578 (Types I - II and IV - XV), that shall withstand the forces imposed upon them during fabrication without substantial deformation such as bulging, sagging, or collapsing. Cardboard is not permitted to be used for void tubes.

The outside dimensions of void tubes shall be as shown on the plans. When two or more sections of tube are used to make up a required length, they shall be either:

1. Effectively spliced together and the joint sealed to prevent concrete leakage between sections with drains and vents placed as specified on the contract plans, or

2. Equipped with additional drains and vents on each side of the splice. Void section lengths should be a minimum of 10 ft. (3 m) to minimize the number of drains and vents. The gap between sections shall not exceed ½ in. (10 mm).

(3) Angles. When required, an angle is incorporated transversely at the beam ends, one leg being flush with the top of the beam and the other flush with the end of the beam. It may be held in place by being bolted to a template clamped to the form. Anchors, as shown on the plans, extending into the beam are welded to the angle to hold it rigidly in the concrete. The Producer shall check the vertical positioning of this angle with extreme care as the allowable tolerance is only ±⅛ in. (3 mm). When the template is removed, protruding bolts should be cut off flush with the angle. When vertical legs of angles are to be painted, all foreign material shall be thoroughly removed from the surface.

(4) Air Vents. During placement and curing of the concrete, the air within the void tubes expands and exerts pressure against the inner surface of the tubes. Experience indicates that the pressure may cause outward bulging of void tubes sufficient to damage the concrete while it is in semi-plastic state. Air vents, therefore, shall be used in connection with both rectangular and cylindrical void tubes. Vent tubes shall be plastic or an equivalent material.

The locations of all air vents shall be described on the shop drawings.

Vent tubes shall extend above the top surface of the beams approximately 1 in. (25 mm) to prevent entrance of water into the void tubes. Upon removal of the enclosure covering and the curing material (Article 1020.13 of the Standard Specifications) on top of the beams, the vent tubes shall be removed or cut flush with the concrete and the holes filled within 48-hours. The holes shall be filled with an epoxy

meeting ASTM C 881 Type IV, grade and class to meet conditions. The use of a cork pushed into the hole may serve as a stop for the sealing material. If approved by the Inspector, the beams may be stored for a period of time longer than 48-hours in such a manner as to preclude the possibility of water (from rain or other sources) entering the vent tubes, but the vent tubes shall be filled before final shipment.

(5) Void Tube Drains. Void tube drains are required in all deck beams. They consist of sections of pipe or other approved material of the same length as the distance of the void tubes from the casting bed, positioned as shown on the plans and held rigidly in place during the concrete placement operations. The drains shall be sealed against the entrance of concrete. The Producer shall check to see that the drains are open before the beams are shipped. Void tube drains shall be plastic or an equivalent material.

The locations of all void tube drains shall be described on the shop drawings.

3.2.6 Specific Features of Deck Beams with Cylindrical Void Tubes

(1) Void Tubes. The cylindrical void tubes are placed longitudinally, side-by-side, and shall be held positively in place. They may be held in position by the use of metal fittings (saddles or chairs) placed permanently on top of them or by use of tie wires and spacer templates. If tie wires are used, they should be looped around light bars placed transversely below the bottom row of strands at a maximum spacing of 30 in. (760 mm) and tied to the strands and brought up vertically around the tubes. The spacer templates may be removed after the tubes are secured by the tie wires.

The bottom layer of concrete may be placed and brought to the correct thickness before the void tubes are positioned. The Inspector may approve the placing of void tubes before the start of the concrete placement operations. Such approval will be granted provided the void tubes will be held in the correct position during placement and consolidation of the concrete and correct placement of void tube drains will result.

(2) Fabric Reinforcement. The fabric reinforcement usually consists of W5.5 wire and W2.5 spaced at 3 and 8 in. (75 mm and 200 mm), respectively. The W5.5 wires run vertically in the side reinforcement and transversely in the top reinforcement. The details shall be as shown on the plans. The fabric reinforcement shall be securely held in position so as to maintain the required clearances and shall be placed before the side forms are set.

The side fabric reinforcement is bent inward horizontally as shown on the plans. The inward bent bottom leg shall be placed below the bottom row of strands and effectively tied to them.

3.2.7 Specific Features of Deck Beams with Rectangular Void Tubes

Rectangular void tubes are placed on concrete that is struck off accurately to the thickness of the bottom slab to eliminate the possibility of void spaces below the tubes in lift pour construction described in Section 3.2.4 (5). Substitution of void tubes of a cross-section differing from that shown on the plans will not be permitted without approval by the Bureau of Bridges and Structures.

The tubes may be held in position by the use of epoxy coated metal fittings (saddles or chairs) placed permanently on top of them or by the use of templates with spacer studs which are removed after placing the concrete but before the concrete has set.

When templates with spacer studs are used, it is recommended that strips of ¼ in. (6 mm) plywood or equivalent not exceeding 6 in. (150 mm) in width, which remain in place, be placed transversely across the void tubes under the studs to prevent puncturing of the tubes. The strips of plywood or equivalent will be disregarded in checking the thickness of the top slab. Alternatively, ¼ in. (6 mm) plywood or equivalent not exceeding 4 in. (100 mm) in width, which remain in place, may be placed longitudinally across the void tubes under the studs. Other arrangements may be approved, but templates having massive cross-pieces in lieu of spacer studs, which tear out undue amounts of concrete upon removal, shall not be used. Templates should be placed not more than 30 in. (750 mm) apart. The Producer shall check to see that the tubes are placed correctly and remain in the correct position.

3.2.8 I-Beams, Bulb T-Beams, and IL-Beams

I-beams and Bulb T-beams shall be constructed according to the plans and specifications, within the stipulated tolerances. This includes formed holes and inserts. They shall be securely held in place by suitable means.

Proper access to beams for tarping purposes shall be provided to avoid footprints on beams and low stirrups due to stepping on stirrups. See also Section 3.5.5.

Care shall be taken for proper consolidation at beam ends which are highly congested. See also Section 3.2.3.

SECTION 3.3 – CURING CONCRETE

3.3.1 General

Proper curing of concrete is critical to the development of the strength and durability of precast prestressed concrete products. Curing includes both the moisture and temperature conditions during the critical early life of the concrete. The retention of moisture ensures the continued hydration of cement and prevents the formation of plastic shrinkage cracking.

To avoid initial drying of the concrete, curing shall be commenced immediately after finishing by covering the exposed surface with not less than two layers of wet burlap or one layer of cotton mats. The material is not required to be in contact with the concrete. Care shall be taken to prevent marring of the surface. The wet burlap or cotton mats shall be covered with an impermeable covering such as polyethylene sheeting. The wet covering and polyethylene sheeting shall be left in place even for steam curing.

Products shall not be permitted to dry prior to release of strands. Wet curing in connection with soaker hose is preferred. However, periodic wetting is also acceptable. Curing products after strand release is at the option of the Producer. Acceptable curing methods are indicated in Article 1020.13.

Concrete shall not be placed until the methods, protection, and facilities for heating have been approved by the Inspector.

3.3.2 Wet Curing

Applicable wet curing methods as stipulated in Article 1020.13 of the Standard Specifications shall apply.

3.3.3 Match Curing

Match curing is a method for curing companion test specimens at the same temperature as the product. Using concrete temperature recording devices to monitor both product and test specimens, a match curing system can provide for test specimens a curing environment via temperature control (by applying heat as needed) that is similar to that of the product. Because the temperature generated within the product is normally more than that generated within an individual test specimen, match curing test specimens results in a more accurate assessment of the strength of the concrete in the product.

Match curing will be an option for curing cylinders tested to indicate concrete strength at strand release only (see Section 1.2.4). Match curing shall be according to Illinois Test Procedure 320 (see Appendix B). The procedure covers requirements for making and curing cylindrical concrete test specimens at or near the same temperature as that measured in a concrete product. Three temperature match-curing systems are specified: insulated jacket molds, air chamber, and water bath systems. Commercial systems for all three are available. Concrete temperature recording device placement should follow the requirements and recommendations noted in 3.3.4 (2) herein, except the temperature recording intervals shall not exceed 1 minute.

3.3.4 Accelerated or Cold Weather Curing

(1) General. Steam, supplemental heat, or insulated blankets (with or without steam/supplement heat) is permitted year-round. For supplemental heat, any method is permitted except for gas-fired heaters used to directly heat exposed concrete surfaces due to the risk of severe carbonation of the concrete.

For steam curing, the arrangement of the steam pipes and the perforations shall be such that local excessively hot spots do not occur, and jets of steam do not impinge directly against forms, members, or test specimens. Provisions shall be made for effective circulation of steam around and over the top of the members by placing frames at suitable intervals, extending at least 4 in. (100 mm) over the sides of the form, and draping a suitable covering over them. The Producer shall provide a complete closure around the casting bed and steam pipes. At no time will the covering material be allowed to dry out. If the steam cannot produce enough moisture to keep the covering saturated, the addition of a soaker hose or other approved water source shall be applied.

For supplemental heat, the arrangement shall be such that local excessively hot spots do not occur, and heat does not impinge directly against forms, members, or test specimens. Provisions shall be made for effective circulation of steam around and over the top of the members by placing frames at suitable intervals, extending at least 4 in. (100 mm) over the sides of the form, and draping a suitable waterproof enclosure to contain both heat and moisture. The Producer shall provide a complete enclosure around the casting bed. At no time will the covering material be allowed to dry out.

During cold weather, the Producer shall use steam, supplement heat, or insulated blankets (with or without steam/supplemental heat) in order to ensure the concrete is maintained at a temperature not less than 40° F (4° C) during the curing period (prior to reaching the strength required for strand release).

Steam or supplemental heat may begin after the preset period, which shall be determined by the Producer. The preset period is defined as the time of initial setting according to ASTM C 403, “Standard Test Method for Time of Setting of Concrete Mixtures by Penetration Resistance.” The preset period temperature-time graph shall be determined according to ATSM C 403 and the Precast/Prestressed Concrete Institute (PCI) Manual for Quality Control for Plants and Production of Structural Precast Concrete Products (MNL 116).

Per PCI, “The length of the preset period is dependent on factors such as the type of cement, use of admixtures, w/cm, temperature, and other mix characteristics. Because of the wide possible variation of initial set times, determination of the actual initial set time per ASTM C 403 is very important.

For a given concrete mix design, the preset period may be established from test data at various initial concrete temperatures. A minimum of three ASTM C 403 time of setting test results should be plotted on a temperature-time graph. It is preferable to use test data obtained at 10° F (6° C) intervals. The extreme data points should cover the anticipated range of concrete placement temperatures. The best fitting smooth curve is then drawn through the data points. To determine an appropriate preset time, plot the actual concrete placement temperature on the best-fit curve and find the associated time of initial set. The preset period determined from the graph should be rounded up to the

next half-hour. (However, the Department will require the Producer to add 30-minutes to the initial set time.)

Any changes in the concrete mix components that are likely to affect the preset time should be considered cause for performing new ASTM C 403 tests."

In addition, per the Department, initial set time testing should be done at least once a month to ensure the temperature-time graph is still representative of the concrete mixture.

A preset period shall be a minimum of 3-hours. ASTM C 403 testing is not required when the preset period is 4-hours or more for a Type III cement. For all other types of cement, ASTM C 403 testing is not required when the preset period is 5-hours or more. However, if a retarder is used, the preset period shall be 7-hours or more to avoid ASTM C 403 testing for all types of cement.

A preset period is not applicable (but 1 hour is recommended), and ASTM C 403 testing is not required when steam or supplemental heat is used primarily to keep the concrete warm, and minor acceleration of concrete strength gain is desired. The air temperature of the enclosure shall not exceed 90° F (32° C), and the concrete temperature rate of increase shall not exceed 20° F (11° C) per hour until a 90° F (32° C) concrete temperature is obtained.

When the ambient temperature is below 50° F (10° C), it may be necessary to apply steam or supplemental heat during the preset period. The concrete temperature may be increased during the preset period at a rate not to exceed 10° F (6° C) per hour. The total permissible temperature gain during the preset period shall not exceed 40° F (22° C) higher than the placement temperature or 104° F (40° C), whichever is less. The Inspector is advised that it is important to avoid excessive heat which raises the concrete temperature above this limit during the preset period. This is to prevent a significant strength reduction that could reach 60% at 28-days in severe cases. When significant heat is applied after the preset period, the strength reduction at 28-days is more likely to be an acceptable magnitude of approximately 5%.

When the steam or supplemental heat is applied, the rise in temperature first takes place in the side forms causing some differential movement between the forms and the concrete. It is important, therefore, that all devices holding bulkheads, recess blocks, and inserts in place are removed or loosened after the preset period and before the steam or supplemental heat is applied so that the side forms are relatively free to expand without causing an undue drag on the concrete in any part of the beams. Furthermore, to minimize such movement, as well as undue temperature differences within the concrete, the rate of increase of the temperature of the concrete shall not exceed 36° F (20 °C) per hour. The maximum concrete temperature permitted during curing is 150° F (65° C). When the concrete temperature during curing exceeds 150° F (65° C), the Producer shall take corrective action to meet the 150° F (65° C) targeted maximum for subsequent pours. A BMPR Form PS03 will also be issued by the Inspector when the concrete temperature is greater than 150° F (65° C) to 158° F (70° C). When the concrete temperature exceeds 158° F (70° C), the Producer shall declare the product unacceptable and a remedy proposal may be submitted. Acceptance of the remedy by the Engineer will be based on the cement and finely divided minerals used in the concrete mixture, and the exposure of the product in the field to precipitation, surface water, high humidity, or moist conditions. If the remedy is

accepted, protective coat or a concrete sealer shall be applied to the product. Vent tubes shall be in place and shall be arranged so that no water can enter the void tubes.

The maximum cooling rate of the concrete in the element shall be 50° F (28° C) per hour until the temperature is 40° F (22° C) or less above ambient temperature outside the curing enclosure.

Forms shall be removed during steam or supplemental heat curing only with the permission of the Inspector. Such permission may be granted if it is reasonably certain that the decrease in concrete temperature will not occur at a rate faster than 50° F (28° C) per hour. This requirement is critical in cold weather and especially during freezing temperatures for all products. Within the time specified in Note 11 of the Index Table in Article 1020.13 of the Standard Specifications, the Producer shall remove the forms; drape wet burlap or cotton mats over the beam top, sides, and ends; replace the closure cover; and resume the steam curing. Longer beams (greater than about 80 to 90 ft. (24.4 to 27.4 m)) are particularly susceptible to cracking due to shrinkage and other effects when they are cooled at a rate which is approaching 50° F (28° C) per hour. As such, the resumption of steam or supplemental heat appreciably before the specified allotment of time has elapsed is recommended as a best practice crack prevention measure for longer beams.

The Producer shall remove bulkheads without applying an impact perpendicular to the face of the bulkheads. A hammer no larger than 2 lbs. (0.9 kg) may be used.

(2) Concrete Temperature Recording Devices. The Producer is required to have concrete temperature recording devices according to Section 1.1.5. Temperature recording devices shall be used when using steam, supplement heat, insulated blankets with or without steam/supplemental heat, match curing of companion test specimens, or whenever directed by the Inspector. The Producer shall endeavor to monitor the approximate locations where: (1) the slowest and lowest concrete temperature occurs, and consequently, least favorable location for the development of strength; (2) the fastest and highest concrete temperature occurs; and (3) a location in case of device failure or false reading, or to gain additional knowledge of temperatures in a product.

When steam or supplemental heat is not used, it is suggested to find the center of the thickest section of the member for placing the temperature probe to locate the hottest concrete, and to place the probe 2-6 in. (50-150 mm) from the top or bottom surface of the thinnest section for locating the coolest concrete. It should be noted that concrete placed last will have a delayed peak temperature when compared to all previously placed concrete. Beam ends will also tend to be cooler because the prestressing strands may conduct heat from the beam. For the beam end, it is suggested to place the probe 14-22 in. (350-550 mm) from the end. Thus, the thinnest section located near the beam end that includes the concrete placed last is a good place to check for the slowest and lowest concrete temperature rise. The thickest section located away from the beam end that includes the concrete placed first is a good place to check for the fastest and highest concrete temperature rise.

In the situation where steam or supplemental heat is used, the hottest or coolest location will depend on how far the location is from the heat source and how much the location generates heat from hydration. When no steam or supplemental heat is used, the top flange could be the coolest. However, if steam or supplemental heat is used, the top flange could be the hottest because of the close location to the heat source, whereas

a thicker section could be cooler because of its distance from the heat source. Even though the thicker section is farther from the heat source, it still has the opportunity to be warmer than the top flange if the thicker section generates enough heat from hydration.

In no case shall a temperature recording device be placed in an air vent tube or covered with plastic to allow reuse.

Temperatures shall be monitored until detensioning operations are completed, and as necessary for match curing of companion test specimens.

SECTION 3.4 – FINISHING AND SEALING

3.4.1 Finishing

(1) General. For deck beams, I-beams, Bulb T-beams, and IL-beams, the Producer's job number, a designation that relates the position of the beam in the structure, and the date cast shall be etched on the top surface of one end. A small area may be finished smooth to allow for the etching.

Surfaces that will be exposed to view in the completed structure shall be given a normal finish according to Article 503.15(a). If the surface contains an excessive number of marks caused by air bubbles trapped against the form, as determined by the Inspector, a mortar consisting of 1-part portland cement and 1 ½-parts fine sand may be applied, and the surface sack rubbed. Rust stains from curb reinforcing and other unsightly blotches shall be removed.

Special considerations should be given to beams that are to be used in highway or railway grade separation structures. If the method used does not produce results to the satisfaction of the Inspector, it may be necessary to require the full degree of rubbing as described in Article 503.15(b) for such structures.

Depressions from the hold-down devices in beams with draped strands shall be thoroughly cleaned of oil and grease and filled with a mortar of the proportion of 1-part portland cement and 1½-parts fine sand. As an alternate, the Producer may follow the patch repair methods described in Section 3.5.6. This work shall be performed before the beams are shipped to the jobsite.

When applying the final finish as specified herein, the Producer should note that special attention may be necessary when finishing self-consolidating concrete. Roughening the surface of fresh self-consolidating concrete may require trial and error to determine a method that produces suitable results. The thixotropic characteristics of self-consolidating concrete (see Section 3.2.3.2) may require care be taken to avoid causing the concrete to revert to its liquid state during and after roughening. Furthermore, temperature and other climatic conditions may also influence how easy or difficult it is to roughen the surface as specified. The method for roughening the surface of self-consolidating concrete shall be approved by the Inspector. Unless otherwise noted, sandblasting may also be an option, particularly if corrective action is needed to provide a roughened surface meeting the requirements.

(2) Deck Beams. The top surface of deck beams shall be screeded with a straightedge and finished with a hand float. Further finishing shall be delayed until the water sheen appears, but not to the point of rendering further manipulation ineffective.

The top surface of deck beams detailed with no wearing surface or a bituminous wearing surface without a waterproofing membrane system shall be textured with a broom finish

The top surface of deck beams detailed with a waterproofing membrane shall not be broom finished but shall be free of depressions or high spots with sharp corners and the top edge of the shear keys shall be rounded or chamfered approximately ¼ in. (6 mm).

The top surface of deck beams detailed with a concrete wearing surface shall be prepared at the fabrication plant with one of the following methods in order of preference:

1. Use Surface Retarder. Surface to be bonded with concrete shall be prepared by washing with water under pressure or by sandblasting to expose clean, well bonded aggregate to an amplitude of approximately ¼ in. (6 mm). To facilitate the removal of the cement paste, the exposed surface shall be thoroughly covered with a surface retarder.

2. Use Steel Shot Blasting. Surface to be bonded with concrete shall be prepared by blasting with steel shot to an amplitude of approximately ¼ in. (6 mm). Equipment shall utilize moisture and oil traps of sufficient capacity to remove contaminants from the air and prevent oil or other contaminants from being deposited on the beam surface.

3. Use Steel Comb. This method shall only be used when weather conditions preclude use of surface retarder or when reinforcement extends out of the surface that would be damaged by steel shot blasting. Surface shall be roughened in the transverse direction to an amplitude of approximately ¼ in. (6 mm) using a 1/8 in. (3 mm) flat wire texture broom with maximum 1 in. (25 mm) wire spacing.

(3) I-Beams, Bulb T-Beams, and IL-Beams. The top surface of I-beams, Bulb T-beams, and IL-beams shall be finished initially with a hand float. Further finishing shall be delayed until the water sheen appears, but not to the point of rendering further manipulation ineffective.

For I-beams and IL-beams with a narrow top flange, the top surface shall subsequently be roughened in the transverse direction to an amplitude of approximately ¼ in. (6 mm) with a 1/8 in. (3 mm) flat wire texture broom with maximum 1 in. (25 mm) wire spacing.

For Bulb T-beams, a portion of the top surface shall receive a smooth finish with a steel trowel. This shall start from the top flange edge and extend 9 ± ¼ in. (230 ± 6 mm) inward for each side. The remaining area shall be roughened as required for an I-beam.

For IL-beams with a wide top flange, the top surface shall be prepared as required for Bulb T-beams, except the trowel finish shall extend only 7 ± ¼ in. (180 ± 6 mm) inward.

3.4.2 Sealing

Protective coat shall be according to Section 1023 of the Standard Specifications and shall be applied to fascia deck beams on the side exposed to view and the adjacent side underneath for a distance extending a minimum of 9 in. (229 mm).

For all I-beams, Bulb T-beams, and IL-beams, protective coat shall be applied to all surfaces at the end of the beam except for the top surface of the top flange and the bottom surface of the bottom flange. The protective coat shall be applied from the end of the beam to a distance equal to the height of the beam and to other areas where cracks are less than 0.007 in. (0.18 mm) in width. In addition, protective coat shall be applied to fascia I-beams, Bulb T-

beams, and IL-beams on all the surfaces of the side exposed to view for the entire length of the beam including the adjacent side underneath (bottom surface of the bottom flange).

Protective coat shall be applied after short term visible crack growth has subsided for deck, I-beams, Bulb T-beams, and IL-beams. The earliest the protective coat may be applied is on the 4th calendar day if short term crack growth has subsided. The 1st calendar day shall be the date casting was completed. The protective coat shall consist of one (1) application of the mixture and it shall be at a rate of 300 sq. ft./gal. or less. Application of protective coat shall also be according to paragraphs 2 and 4 of Article 503.19 of the Standard Specifications.

In lieu of protective coat, a concrete sealer according to Section 1026 of the Standard Specifications may be used at the option of the Producer. See the "Qualified Product List of Concrete Sealers" (link embedded) under "Qualified Product Lists" at the following link: http://www.idot.illinois.gov/doing-business/material-approvals/concrete/index for application limitations, since the concrete age for a concrete sealer may be longer than what is required for protective coat. Application of a concrete sealer shall be according to Article 587.03.

SECTION 3.5 – INSPECTION OF COMPLETED PRODUCTS

3.5.1 General

The Producer shall perform a complete inspection of the product within two working days of strand release. This inspection is given the designation “post-pour inspection”. If the product will remain in storage for more than three weeks after date of manufacture, the Producer shall re-inspect the product for dimensional tolerances, and any damage or cracking approximately 7 calendar days before shipping. This inspection is given the designation “pre-delivery inspection”. In addition, the Producer shall perform a summary visual inspection of the product immediately after being loaded for transportation to the construction site. If a precast prestressed product was loaded on a truck and subsequently unloaded at the plant because a delivery could not be made, the Producer shall perform another summary inspection immediately after being reloaded for transportation to the construction site.

If a product does not meet specifications, the Producer shall immediately notify the Inspector. If a product is not required to be rejected by this manual, a remedy proposal may be submitted according to the “Procedure to Remedy an Unacceptable Prestressed Product at the Plant” (see Appendix A).

3.5.2 Dimensions

For dimensional tolerance information, refer to Section 1.2.4. The Producer shall establish a reference point for bed set-up measurements. The Producer shall inform the Inspector of this point so that all check measurements of the finished product can be made from the same point as the set-up. The Producer shall check all the dimensions of each product to see if they are within the specified tolerances. Influence of temperature on measurements shall be considered negligible, except for beam length measurements and as noted below for initial sweep.

Products having dimensions outside of the specified tolerance limits shall be declared unacceptable by the Producer and a remedy proposal may be submitted. Length and sweep can change over time, and in addition to a post-pour or pre-delivery inspection, a product may be rechecked at any time at the discretion of the Inspector. Beams tend to shrink or become shorter over time. Producers are advised to take this effect into account, especially for longer beams and/or if beams are anticipated to be stored at a Producer’s plant for an extended period of time. When a product is out of tolerance for sweep, initial corrective measures such as shimming may be taken with the approval of the Inspector. However, if the product is still out of tolerance for sweep, the product shall be declared unacceptable and a remedy proposal may be submitted. If the corrective measures are unable to get the sweep back into tolerance prior to shipping, the product shall be rejected, and no additional remedy proposal will be accepted from the Producer. In regard to sweep, be advised that for the post-pour inspection, reliable measurements for initial sweep should be made before the product is exposed to direct sunlight. If the beam is exposed to uneven sunlight, it will cause temperature differentials that may cause the beam to temporarily warp. Long term sweep is measured for pre-delivery and jobsite inspections. Its magnitude can be reflective of time dependent effects from storage conditions (such as beams being out-of-plumb and non-rigid dunnage), slight deviations in strand placement from the contract plan dimensions, etc. Excessive initial sweep can also be a source of subsequent long-term sweep.

Inserts and Attachments

Inserts and attachments for a product are necessary to assist with construction and erection, and the Department prefers to have these items cast in the product instead of drilling. The Producer shall identify the location and placement of all inserts and attachments on the shop drawings, which shall include the dimensional tolerance for placement. Contractor and Producer requested inserts and attachments shall not interfere with any reinforcement or structural component details shown on the contract plans.

Contractor requested inserts and attachments with tolerances shall be designated on the shop drawings with the boxed notation “CR”. Producer requested inserts and attachments shall be designated on the shop drawings with the boxed notation “PR”. Inserts and attachments specified on the contract plans need not have a special designation, but their locations and placements shall be identified on the shop drawings.

The Producer shall notify the Inspector if an insert or attachment specified on the contract plans is either missing or placed out of tolerance. The Producer shall either reject the beam or declare the beam unacceptable. If a beam is declared unacceptable, a remedy proposal may be submitted by the Producer.

The Producer shall notify the Inspector and Contractor if a Contractor requested insert or attachment is either missing or placed out of tolerance. The Contractor shall either reject the beam, accept the beam, or direct the Producer to remedy the beam. A remedy proposal will not be required from the Producer. The Contractor shall provide a letter or e-mail to the Inspector indicating what corrective measures are required, and if they will be performed at the plant or jobsite. The letter or e-mail shall be forwarded by the Inspector directly to the Bureau of Bridges and Structures (BBS) for review and approval. BBS may request assistance from the Central Bureau of Materials as required. Upon review, BBS will notify the Inspector of the decision by BBS.

If a Producer requested insert or attachment is either missing or placed out of tolerance, the Producer shall either accept the beam, reject the beam, or provide a letter or e-mail to the Inspector indicating the corrective measures required. A remedy proposal will not be required from the Producer. The letter or e-mail shall be forwarded by the Inspector directly to the BBS for review and approval. BBS may request the assistance from the Central Bureau of Materials as required. Upon review, BBS will notify the Inspector of the decision by BBS.

Formed Holes for Permanent Bracing

The connection angles for the permanent bracing shall be attached to the beams as shown in the contract plans prior to shipment. The 15/16 in. (24 mm) diameter holes in the connection angles may be drilled by the supplier or drilled at the Producer’s plant to account for potential fabrication scenarios described below. If fabrication errors in the placement of the formed hole require plant drilling of the connection angle hole, an un-drilled angle shall be used. Over-drilling or re-drilling of existing holes is not permitted.

The permanent bracing tolerances listed in Section 1.2.4 herein determine whether a product is acceptable or unacceptable; however, unlike most of the other tolerances, corrective action may still be required by the Producer to properly connect the permanent bracing angle even if it meets the tolerances. There are two tolerances associated with these formed holes. One is the location and the other is the differential alignment of the hole.

The location tolerance is addressed by requiring the Producer to drill the holes in the steel attachment angles or bent plates and securing them to the beams before shipping. The angles or bent plates have 6 in. (150 mm) legs to accommodate the hole location tolerances horizontally. The height of the angles or bent plates shall be ordered long enough to accommodate the hole location tolerance vertically. Appendix A has three related figures: one depicting the recommended permanent bracing angle orientation and connection to the beams and the other two depicting the target hole locations with the permissible limits of the holes. The Producer shall clearly depict the geometry of the connection angles and the unique orientation and placement on each beam in the shop drawings.

The differential alignment tolerance, which is the differential measurement (Δ) to the hole made on each side of the beam, shall be handled as follows:

1. Δ ≤ ¼ in. (6 mm);
   No action required.
2. ¼ in. (6 mm) < Δ ≤ ½ in. (13 mm);
   Provide beveled washers or remove PVC pipe and seal concrete inside the hole.
3. ½ in. (13 mm) < Δ ≤ 1 in. (25 mm);
   Provide beveled washers.
4. Δ > 1 in. (25 mm);
   Declare product unacceptable and a remedy proposal may be submitted.

If the Producer elects to re-drill a misaligned hole in the concrete instead of the actions listed in 2 and 3 above, the product shall be declared unacceptable and a remedy proposal may be submitted.

3.5.3 Honeycomb, Voids, Chips, Spalls, and Other Damage

The damage limits specified for honeycomb, voids, chips, spalls, and other damage shall be based on dimensions after concrete removal.

The Producer may perform a repair without submitting a remedy proposal for the following conditions:

1. Damage is not in the bearing area or in the middle third (lengthwise) of the beam.
2. Length of the cumulative damage does not exceed 5% of the length of the product.
3. Maximum cross-sectional area of the damage perpendicular to the wall does not exceed 2% of the minimum cross-sectional area of the concrete in the product.
4. Damage did not occur during handling and shipping.
5. Damage does not expose strands.
6. Anticipated construction patches for hold down devices.

The Producer shall declare the product unacceptable and a remedy proposal may be submitted for the following conditions:

1. When the cumulative length of the damage exceeds 5% of the length of the product or 2% of the minimum cross-sectional area of the concrete in the product.
2. When damage exposes one or two strands.
3. Damage in the bearing area does not exceed 10% of the total bearing area. The bearing area for deck beams is defined by the area of the beam end that is in contact with the fabric bearing pads. The bearing area of I-beams and Bulb T-beams is defined by the area of the beam end that is covered by the bottom splitting plate. The bearing area of IL-beams is defined by the first 18 in. (455 mm) from the beam end as a minimum. Larger bearing areas may be defined on the contract plans.
4. When damage exposes more than two strands but is limited to the end area where the strands have been cut. An example of this is a corner spall.
5. When damage occurs during handling and shipping. (Note: For this type of damage, the Producer shall indicate in the remedy proposal if damage was the result of beam torsion.)
6. Damage is in the middle third (lengthwise) of the beam.

The Producer shall reject the product and no remedy proposal will be accepted for the following conditions:

1. Damage in the bearing area exceeds 10% of the total bearing area.
2. Damage that exposes more than two prestressed strands and is not limited to the end area where the strands have been cut.
3. Damage that exposes a void tube.

3.5.4 Cracks

Crack width determinations shall be made by the Producer. Crack diagrams by the Producer are only required when a product is declared unacceptable. The Producer shall provide two types of crack measuring devices. The first shall be a pocket size crack comparator (small transparent ruler or feeler gauge capable of measuring cracks as small as 0.005 in. (0.125 mm)) or equivalent. The second shall be a graduated magnifying device (magnifying power 10 to 20 X, capable of measuring cracks as small as 0.002 to 0.004 in. (0.05 to 0.10 mm)) or equivalent. As an aid, it is suggested to spray the concrete surface with water to help locate cracks.

On rare occasions it may be necessary to determine crack depth. Drilling to determine crack depth shall be approved by the Engineer, and only non-hammer type drills shall be used. Drilling shall be performed in ¼ in. (6 mm) increments, with subsequent visual inspections to determine if the crack has terminated. The resulting hole shall be filled with an epoxy meeting ASTM C 881 Type IV, grade and class to meet conditions.

Precast prestressed concrete piles or posts that contain cracks shall be declared unacceptable by the Producer and a remedy proposal may be submitted. All portions of cracks that have a width greater than 0.002 in. (0.05 mm) shall be measured. Additionally, crack sizes

of 0.002 in. (0.05 mm) and smaller which follow a strand or cross more than 10% of the strands shall also be measured.

The type, size, and location of permissible cracks for precast prestressed beams for post-pour, pre-delivery and jobsite inspections are described below. Note that post-pour crack inspections are to be conducted after detensioning is completed. Post-pour, pre-delivery and jobsite crack dimensions are typically different because cracks are expected to grow over time and/or during transportation and handling.

1. Splitting Cracks at Beam Ends

   If cracking at beam ends occurs, it shall be limited to the end block (distance from the end of the beam to the beginning of the embedded void) for deck beams and a distance H (depth of the beam) measured from the beam ends for I-beams and Bulb T-beams. "Permissible Crack Types for PPC Deck, I-Beams, Bulb T-Beams, and IL-Beams" are illustrated in Appendix A.

   Once cracks have been measured, the Producer shall compare them to the Permissible Crack Guidelines shown below to determine acceptability. A repair may be performed without submitting a remedy proposal when cracking is within the following guidelines for post-pour, pre-delivery and jobsite inspections.

   <u>Permissible Crack Guidelines for Deck Beams</u>

   1. Horizontal cracks as shown in Appendix A may occur in prestressed beams due mainly to the splitting forces. These cracks usually wrap around the beam ends. The maximum cumulative crack width on a beam end for this type of crack is 0.015 in. (0.38 mm). For example, 1 horizontal crack of 0.015 in. (0.38 mm) or 3 cracks that are 0.005 in. (0.13 mm) would be acceptable. The crack widths shall be measured from the end view of the beam.

   2. Diagonal cracks as shown in Appendix A may occur in prestressed beams with this configuration. The maximum cumulative crack width for this type of crack is 0.015 in. (0.38 mm).

   3. Transverse cracks as shown in Appendix A may occur in prestressed beams. The maximum crack width for this type of crack is 0.010 in. (0.25 mm), and the maximum cumulative crack width is 0.020 in. (0.50 mm).

   4. "Half-moon" cracks as shown in Appendix A may occur in prestressed beams when most of the permissible strand locations are utilized in the center. The maximum crack width for this type of crack is 0.007 in. (0.18 mm). In some cases, especially if the cracks wrap around the underside of the beam, the concrete inside the crack may be unsound, and if that is the case, the rules in Section 3.5.3 shall be followed.

   <u>Permissible Crack Guidelines for I-Beams, Bulb T-Beams, and IL-Beams</u>

   1. Horizontal cracks as shown in Appendix A may occur in prestressed beams due mainly to the splitting forces. These cracks form at the beam ends and usually wrap around the web. The maximum crack width for any single horizontal crack on a beam end shall be 0.007 in. (0.18 mm) and the maximum cumulative crack width on a beam end for this type of crack is 0.015 in. (0.38 mm). For example, 3 horizontal

cracks that are 0.005 in. (0.13 mm) or 5 cracks that are 0.003 in. (0.08 mm) would be acceptable. The crack widths shall be measured from the end view of the beam.

2. Diagonal cracks as shown in Appendix A may occur in prestressed beams with multiple draped strands due mainly to the splitting forces. Diagonal cracks that are "reversed" or rotated 90° from those shown in Appendix A may also occur in Bulb T-beams with multiple draped strands. These cracks will typically appear from 1 to 3 ft. (0.30 m to 0.90 m) from the ends of beams in and around the web and top flange interface. The maximum crack width for any single diagonal crack shall be 0.007 in. (0.18 mm).

3. Cracks at formed holes or inserts as shown in Appendix A may occur in prestressed beams with these details. The maximum crack width for this type of crack is 0.007 in. (0.18 mm).

2. Crazing Cracks

Crazing cracks are caused by shrinkage of the surface layer. This shrinkage can be a result of poor or inadequate curing, finishing while there is bleed water on the surface, too wet a mix, and other causes. Crazing cracks do not affect the structural integrity of a beam and rarely do they affect durability or wear resistance. Crazing cracks are permissible in a beam if their occurrence meets the description given below as determined by the Inspector.

Crazing cracks are rarely more than ⅛ in. (3 mm) deep. Crazing is apparent to the eye as a network of fine random cracks or fissures. Irregular hexagonal areas enclosed by crazing cracks are typically no more than 1½ in. (40 mm) across and may be as small as ½ or ⅜ in. (12 or 20 mm). Generally, craze cracks develop at an early age (1- to 7-days). They are often not readily visible until the surface has been wetted and is beginning to dry out.

3. Plastic Shrinkage Cracks

Plastic shrinkage cracks appear in the surface of fresh concrete soon after it is placed and while it is still being finished. They are relatively shallow, longitudinal along the beam, and usually parallel to each other on the order of about 3 to 24 in. (75 to 600 mm) apart. Plastic shrinkage cracking is the result of rapid evaporation of moisture from the concrete surface. The cracks occur when water evaporates from the surface faster than bleed water can appear at the surface.

Products with plastic shrinkage cracks that are 0.007 in. (0.18 mm) or greater, or when the total length of all cracks exceeds 24 in. (610 mm), shall be declared unacceptable and a remedy proposal may be submitted.

4. Restraint or Vertical Cracks

Restraint or vertical cracks (see Appendix A) are more likely to occur in longer beams than for those with short to medium spans. Note that cracks may also occur on the tops of beams (not shown in Appendix A). These cracks are normally ⅛ in. (3 mm) deep or less and are typically the result of drying shrinkage or thermal contraction.

For I-beams, Bulb T-beams, and IL-beams with spans of 80 ft. (24.4 m) or greater, cracks more than 30 in. (0.76 m) from beam ends that are 0.006 in. (0.15 mm) or less in width after detensioning are permissible. All deck beams, I-beams, Bulb T-beams, and IL-beams with spans less than 80 ft. (24.4 m) that have cracks more than 30 in. (0.76 m) from beam ends shall be declared unacceptable. All deck beams, and I- and Bulb T-beams with cracks less than or equal to 30 in. (0.76 m) from beam ends shall be declared unacceptable.

Prestressed beams with cracks exceeding the Department's post-pour, pre-delivery and jobsite limits or have cracks which do not fall into any of the categories above (as determined by the Inspector) shall be declared unacceptable by the Producer and a remedy proposal may be submitted. Additionally, for the post-pour, pre-delivery, and jobsite inspections, beams with cracks that follow a strand or cross more than 10% of the strands, regardless of the width, shall be declared unacceptable by the Producer and a remedy proposal may be submitted. In such cases there is a possibility of strand debonding.

When a product is declared unacceptable due to cracking, the Inspector will include all sketches documenting the exact location, size, length and pattern of cracks, along with the camber measurements and documentation of any strand slippage on Form BMPR PS02.

3.5.5 Miscellaneous Damage

3.5.5.1 Depressions

Products that have been stepped on resulting in permanent depressions shall be declared unacceptable by the Producer and a remedy proposal may be submitted. Products with depressions may have displaced reinforcement or voids.

3.5.5.2 Laminations

Whenever there is a reason to suspect a cold joint or fold, the following initial visual inspection in conjunction with examining exploratory cores may be used to determine if a lamination actually exists. A lamination will permit water access and reduce the life expectancy and durability of the beam.

In the case of the initial visual inspection, if water weeps from the cold joint or fold immediately after form removal, this indicates a lamination exists. The product shall be rejected by the Producer and no remedy proposal will be accepted. However, if no water is observed, this does not assure a cold joint or fold does not exist. The visible line may be at the form surface only, or an actual lamination may extend into the beam. Therefore, coring will need to be performed.

The Producer may propose exploratory core samples be taken. The locations should focus on those areas with the highest concern, and consideration should be given to spacing the cores every 10 to 15 ft. (3 to 4.5 m) if the cold joint or fold is extensive in length. The Inspector will make the final determination on the appropriate number of cores and their locations but may consult with the Bureau of Bridges and Structures. The cores should be approximately 1 in. (25 mm) in diameter, centered over the visible line, and extend approximately 2 in. (50 mm) into the beam. Care shall be taken to ensure that no reinforcing

steel or prestressing strand is damaged by the core sampling operation. Once the exploratory core sample is obtained, use the following three steps to examine the core and determine if a lamination exists.

1. The first step is to firmly tap the core on a hard and flat surface. If the core separates into two halves along the visible line, this is confirmation a lamination exists, and the product shall be rejected.

2. If the core doesn't break, the second step is to allow the core to dry, since it will be wet from the coring operation. As the core dries, observe if the visible line remains wet after the surface of the core dries. Preference should be given to the inner portion of the core sample, since the formed face may have honeycomb or other issues that are not related to the suspected cold joint or fold. If it remains wet, this is confirmation a lamination exists, and the product shall be rejected.

3. If the visible line does not remain wet, the third step is to examine the core and core hole for consolidation. If visual inspection shows coarse aggregate crossing what is suspected to be the lamination, this is an indication that the concrete was adequately consolidated and no cold joint or fold exists. However, if the inspection still shows a distinct layer in the core or core hole, this is confirmation that a lamination exists, and the product shall be rejected.

The Inspector will make the final determination if there is a cold joint or fold. To repair core holes, the materials discussed in Section 3.5.6 under (1) Repairs may be used. The selected repair material shall be approved by the Inspector. Refer to Section 3.2.3.1 for more information on cold joint and Section 3.2.3.2 for information on a fold from self-consolidating concrete.

3.5.5.3 Weak Surface

If the top surface (as cast) is weak and can be easily scratched with a pocketknife in a dry condition after reaching final strength, the product shall be declared unacceptable and a remedy proposal may be submitted. Refer to Section 3.2.3.3 for information on mix foaming from self-consolidating concrete.

3.5.6 Repairs

The Producer shall notify the Inspector prior to beginning repair procedures that do not require a remedy proposal. The Inspector will witness and inspect all repairs and perform any required quality assurance testing. When a product has been declared unacceptable, the "Procedure to Remedy an Unacceptable Prestressed Product at the Plant" shall be followed.

(1) Patch Repairs

The primary concern with patching of prestressed concrete beams is that the patch material and the surrounding concrete are not monolithic. This raises the probability that the patch will loosen with future weathering and shrinkage, resulting in loss of cross-sectional area of the beam and, potentially, corrosion of the steel and strand due to chloride intrusion. It is preferable to perform repairs prior to strand release whenever possible.

Formwork for patch repairs shall be securely held in place with bar clamps, glue or other means approved by the Inspector. Formwork proposed to be held in place with screws shall be submitted to the Engineer for review and approval.

Any area requiring patching that is in the middle third (lengthwise) of a beam and in the "A" region as defined for each beam depth and type in Appendix C shall require preloading of the beam prior to patching according to Sections 2.14.1 and 2.14.2 of the IDOT Structural Services Manual (link embedded).

In these cases, the Producer shall submit a loading scheme prepared by an Illinois Licensed Structural Engineer to the Bureau of Bridges and Structures for review and approval. I-, Bulb T-, and IL-beams will be required to be preloaded at the job site before patching; preloading shall not begin until after the beams have been set and the composite bridge deck has been cast. See Section 3.6.3 for additional details. Deck beams can be properly preloaded at the fabrication plant and shall be repaired there.

Areas requiring patching in the middle third (lengthwise) of a beam and above the "A" region do not require a preload and shall be covered with an FRP patch. The patch shall extend 6 inches beyond the edge of the damage in all directions and shall additionally be coated with a vapor permeable, UV-resistant polymer or acrylic-based coating that is grey in color. See Appendix D for more details.

When a damaged area is to be repaired, all loose material shall be removed, and the area cut back until coarse aggregate will break under chipping rather than dislodging. The sides of the repair area shall be shaped with one or more faces having minimum depths of 1 in. (25 mm) and as perpendicular as possible to the surface of the area. The area shall be cleaned by brushing. The prepared surface and up to 4 in. (100 mm) outside the repair area shall be wetted a minimum of 1-hour before application of the repair material. The surface shall be maintained in a dampened condition during the 1-hour period. Immediately before placing the repair material, any excess water shall be removed.

Anchoring of patches through the use of drilled and chemically adhered rebar or bolts is generally not required but is also not prohibited. Under certain circumstances, however, anchoring of patches may be necessary. Examples include a spalled or broken area in the top flange of I-beams, Bulb T-beams, or IL-beams, and a spalled or broken area in the top of deck beams that will only have a bituminous wearing surface or no wearing surface as part of the final structural configuration in the field. Spalled or broken areas of products in other areas as much as 2 to 3 in. (50 to 75 mm) in depth need not be anchored.

The repair material shall be a no-slump concrete mix using the product's component materials which can be packed solidly into the repair area by hand, under vibration, or using oil free compressed air. The proportions of the repair material shall be adjusted to ensure adequate consolidation. A coarse aggregate shall only be used when the minimum depth of the repair is at least 3 times the maximum aggregate size. The presence of reinforcement should also be considered when selecting aggregate for the repair material. The maximum aggregate size shall be no more than ¾ of the clear spacing around the reinforcement. The patch material shall be cured for 3-days according to Article 1020.13(a)(3) or (5) of the Standard Specifications and shall obtain a strength equivalent to or higher than the specified strength for the product. At the discretion of the Department, a strength verification test may be performed according to Illinois Modified AASHTO T 22 and T 23.

As an alternative to the no-slump concrete mix, a prepackaged repair material may be used, provided the resulting appearance or color is not objectionable to the Inspector.

The prepackaged repair material shall be a no-slump mix which can be packed solidly into the repair area by hand or under vibration. Curing shall be according to the manufacturer's recommendations. The prepackaged repair material shall be from the "Qualified Product List of Nonshrink Grouts," the "Qualified Product List of Packaged, Dry, Rapid-Hardening Cementitious Materials for Concrete Repairs," the "Qualified Product List of Polymer Modified Portland Cement Mortar," or the "Qualified Product List of Packaged, Dry, Combined Materials for Mortar" (links embedded). The prepackaged material shall be appropriate for the size and depth of repair and shall obtain a strength equivalent to or higher than the specified strength for the product. At the discretion of the Department, a strength verification test may be performed according to the Department's material specification for the packaged product. The approved lists may be found on the Internet under "Qualified Product Lists" at the following link: http://www.idot.illinois.gov/doing-business/material-approvals/concrete/index

As an alternative to a no-slump concrete mix or prepackaged repair material, the Producer may propose to use a suitable epoxy (Type, Grade, Class) according to ASTM C 881. This alternative is typically advantageous for very shallow or small repairs where aesthetics is not a concern.

(2) Crack Repairs

Cracks are regarded as potential locations for the start of deterioration of the concrete because of salt and freezing water.

The cracks on the sides and the bottom surface of a product shall be repaired as follows:

1. Protective coat or a concrete sealer shall be applied to cracks less than 0.007 in. (0.18 mm) in width. (Note: If protective coat is selected by the Producer in Section 3.4.2, then the same protective coat shall also be used for crack repairs. Likewise, if a concrete sealer is selected in Section 3.4.2, then the same concrete sealer shall also be used for crack repairs.)
2. Cracks that are 0.007 in. (0.18 mm) through 0.015 in. (0.38 mm) in width shall be pressure injected according to Section 590 of the Standard Specifications.
3. Any portion of a crack that falls within the shear key area of a deck beam shall not be repaired, since the protective coat, concrete sealer, or epoxy may impede the bond between the keyway grout and the beam.

The cracks on the top surface of a product that will be exposed to the weather, and are not protected by such things as a bridge deck or wearing surface shall be repaired as follows:

1. A low viscosity epoxy-polysulfide resin penetrating sealer; or a Type IV, Grade 1, Class A, B, or C epoxy according to ASTM C 881; or pressure injection of the cracks according to Section 590 of the Standard Specifications shall be used. If caulk or other material is used during the repair of a crack, it shall be ground off.

(3) Repairs With Drilling

All repairs that require drilling shall be performed with a non-hammer type drill. Sketches shall be provided as part of the remedy proposal which indicates the locations of drilled holes in relation to the strands and reinforcement. In some instances, the Department may require hole surfaces to be roughened.

(4) Correcting Plumbness of Extended Strands for IL-Beams

Plumbness of extended strand for IL-beams shall be corrected prior to shipment. Heat- or cold-bending will be permitted. Other methods shall be approved by the Inspector.

(5) Precast/Prestressed Concrete Institute (PCI) Repair Manual

PCI has a publication titled “Manual for the Evaluation and Repair of Precast, Prestressed Concrete Bridge Products.” Information in this manual may be used to supplement Department repair methods.

(6) Load Testing of Prestressed Beams

In certain circumstances, load testing of prestressed beams may be allowed by the Engineer of Record to determine acceptability.

SECTION 3.6 – HANDLING, STORAGE, AND TRANSPORTATION OF BEAMS

3.6.1 General

The members shall be maintained in an upright position at all times and shall be supported only at the ends. During lifting, they shall be supported only by the inserts or devices provided for that purpose. The lifting device(s) and lifting loop details and designs will be shown on the contract plans. Current standard details and designs specify ½ in. (12.70 mm) prestressing strand for lifting loops; however, a simple strand-for-strand substitution will be allowed if substituting $^{6}/_{10}$ in. (15.24 mm) strand for ½ in. (12.70 mm) strand. Otherwise, the Producer may utilize an alternate lifting system provided the following criteria are met:

1. The Producer retains an Illinois Licensed Structural Engineer to design the system for lifting and handling according to the PCI Design Handbook, Precast Prestressed Concrete, 8th Edition (MNL-120). A Factor of Safety of 4 shall be required. Calculations and details shall be sealed by the Illinois Licensed Structural Engineer and submitted to the BBS for its records.
2. The lifting system shall have a minimum of two lift points for I-Beams, Bulb T-beams, and IL-beams. A minimum of four lift points shall be required for deck beams.
3. The centroid of the proposed lifting device or devices from each beam end shall match the centroid of the lifting device or devices from each beam end shown on the contract plans.
4. All lifting devices shall be detailed on the shop drawings.
5. The Producer shall coordinate with the Central Bureau of Materials to include the lifting system in the Producer's QSM.

When piles are picked up with adjustable slings, blocking should be used to prevent breaking off corners of the pile. The pick-up points should be plainly marked on all piles before removal from the casting bed and all lifting shall be done at these points.

3.6.2 Storage

The supports of the beams shall be placed on a solid foundation and maintained in a level position to prevent differential settlement and beam twisting. Before beams are stored, each shall be identified according to Section 3.4.1.

3.6.2.1 I-Beams, Bulb T-Beams, and IL-Beams

Beams shall be fully supported on battens placed perpendicular to the centerline of the beam. Battens shall be a minimum 6 in. (150 mm) wide and shall be located no less than 12 in. (300 mm) and no more than 24 in. (600 mm) from each beam end.

3.6.2.2 Deck Beams

Beams shall be fully supported across their width on battens placed parallel to the beam skew. Battens shall be a minimum of 4 in. (100 mm) wide and shall be located no less than 8 in. (200 mm) and no more than 24 in. (600 mm) from the obtuse corner of each beam end.

3.6.2.3 Bridge Approach Slab Beams

Beams shall be fully supported across their width on battens placed parallel to the beam skew. Battens shall be a minimum of 4 in. (100 mm) wide and shall be located no less than 16 in. (400 mm) and no more than 42 in. (1050 mm) from the obtuse corner of each beam end.

3.6.2.4 Channel Beams

Beams shall be fully supported across their width on battens placed parallel to the beam skew. Battens shall be a minimum 4 in. (100 mm) wide and shall be located no less than 8 in. (200 mm) and no more than 18 in. (450 mm) from the obtuse corner of each beam end.

3.6.2.5 Stacking

Bridge approach slab beams and deck beams may be permitted to be stacked. The supports for all beams shall be in the same vertical plane, and the battens for beams on top of the base beam shall be fully supported parallel with the skew and across the beam width minus 3 in. (75 mm) from each edge. Care shall be taken that stacking does not interfere with or damage lifting devices or exposed reinforcement, and the uppermost beam shall not be used as a storage place for shorter beams or heavy equipment.

3.6.3 Release for Shipment

When a prestressed product has attained the specified strength, the earliest the product may be loaded, shipped, and used shall be as follows:

1. Precast prestressed concrete deck beams – the 5th calendar day.
2. Precast prestressed concrete I-beams, Bulb T-beams, and IL-beams used for single-span bridges less than or equal to 100 ft (30 m) long – the 5th calendar day.
3. Precast prestressed concrete I-beams, Bulb T-beams, and IL-beams used for single-span bridges greater than 100 ft (30 m) long or for multi-span bridges – the 31st calendar day.

The 1st calendar day shall be the date casting was completed. The purpose of the 5-day waiting period is to allow sufficient time for any potential cracks to develop. The purpose of the 31-day waiting period is to allow a large percentage of the creep, shrinkage, shortening and camber to occur in the beam and thereby minimize design and construction problems.

Prior to shipment of deck beams, all shear keyway surfaces shall be cleaned to remove form oil or other bond breaking material. Cleaning shall be done by sand, abrasive or water blasting the keyway areas between the top of the beam and the bottom edge of the key to the satisfaction of the Inspector.

Beams released for shipment by the Inspector shall be stamped ILL OK for notification to the resident engineer. Beams shall not be stamped ILL OK prior to the Inspector receiving the final distribution shop drawings. It is recommended to place the stamp where information that identifies the product is written. For beams, a stamp at each end is recommended. If an ILL OK stamp has become worn, it is to be discarded and a new stamp obtained from the Central Bureau of Materials. Consultants who do inspection for the Department are responsible for their

ILL OK stamps. The ILL OK stamp ink can fade with time, and therefore the stamp should be applied near the time of shipment.

Departmental Inspectors with ILL OK stamps can be found on the "Numeric List of Assignments of Rubber Stamps Used to Identify Materials Offered for Illinois Department of Transportation" (link embedded).

Consultants with ILL OK stamps who do inspection for the Department can be found on the "Organizational List of Assignments for Consultant Inspector Rubber Stamps Used to Identify Materials Offered for Illinois Department of Transportation" (link embedded).

The Inspector is to never apply the ILL OK stamp before repairs are completed and inspected for approval. In addition, the Inspector shall have completed the quality assurance requirements in Section 1.3.2 before stamping the product. It is understood that the Inspector conducts quality assurance activities and is not present during or directly involved with every aspect of the fabrication process. The ILL OK stamp is evidence of the validation of the Producer's quality control activities by the Inspector's quality assurance activities.

If a product is shipped without an ILL OK stamp, the Inspector shall notify the Resident Engineer (Owner or Representative of the Owner in the case of Local Agency projects). The Resident Engineer, Owner, or Representative of the Owner shall issue a PS02 form and is responsible for communicating with the Inspector at the plant regarding QA, QC, acceptance and rejection issues.

In very rare cases, the receiving District or Local Agency may request a product to be delivered prior to approval of a remedy, such as in the case of a remedy that is best accomplished at the jobsite. In this situation, the Inspector shall not stamp the product ILL OK, and the Central Bureau of Materials shall be notified of the situation. The Inspector shall not release the product for shipment until directed by the Central Bureau of Materials.

3.6.4 Transportation

The Producer shall be responsible for stability and any damage caused during transportation. The Producer shall utilize transportation loading configurations satisfying all PCI requirements and recommendations and the IDOT requirements below. The Producer shall have an Illinois Licensed Structural Engineer evaluate the transportation loading configuration according to Section 8.10 of the latest version of the PCI Bridge Design Manual. Variables such as the roll stiffness of the truck, anticipated superelevation of the delivery route, and so on, shall be considered in the analysis. These sealed calculations need not be submitted for review and approval but shall be available to the Department upon request.

Wood blocks or other suitable material shall be placed between the beam and the supports and between all restraining devices of the beam to prevent chipping of the concrete. If damage is observed, the product shall be declared unacceptable and a remedy proposal may be submitted.

3.6.4.1 I-Beams, Bulb T-Beams, and IL-Beams

The centerline of the support locations during transportation shall be located no closer than 20 inches (510 mm) relative to the beam ends and no further away than the centroid of the lifting loops.

To assist in transportation, the fabricator may place up to four 1 ¼ inch (32 mm) diameter holes per beam end in the web. The hole location(s) shall be centered over the truck supports and vertically located in the upper half of the beam. When utilizing two holes they shall be at least 12 inches (300 mm) apart. Care shall be taken to avoid all strands, reinforcement bars, and splitting steel rods.

3.6.4.2 Deck Beams

The centerline of the support locations during transportation shall be located no closer than 15 inches (375 mm) and no further away than 3.0 ft (915 mm) relative to the beam ends.

DIVISION 4 – MATERIALS

The Producer shall ensure that all materials used in the manufacture of the products meet the requirements of the Standard Specifications. See Article 106 of the Standard Specifications for more information. The finished product will not be accepted unless all materials are approved.

SECTION 4.1 – CONCRETE MATERIALS

Materials for concrete shall conform to Article 1020.02 of the Standard Specifications.

4.1.1 Cement

Except for IL-beams, the minimum and maximum cement factor and minimum portland cement content shall be according to Article 1020.04 of the Standard Specifications. For IL-beams, the minimum cement factor and minimum portland cement content shall be according to Article 1020.04; however, the maximum cement factor shall be 8.00 cwt/cu. yd (475 kg/cu. m).

The Qualified Producer List of Cement Plants (link embedded) may be found on the Internet under "Qualified Product Lists" at the following link: http://www.idot.illinois.gov/doing-business/material-approvals/cement/index.

4.1.2 Finely Divided Minerals

The amount of Class C or F fly ash shall not exceed that specified in Article 1020.05(c)(1) of the Standard Specifications. The replacement ratio (fly ash:cement replaced) shall be a minimum of 1:1.

The amount of ground granulated blast-furnace slag shall not exceed that specified in Article 1020.05(c)(2) of the Standard Specifications. Microsilica or high reactivity metakaolin may be used with approval from the Inspector according to Article 1020.05(c)(3) and Article 1020.05(c)(4), respectively, of the Standard Specifications.

The minimum and maximum amount of finely divided minerals shall be according to Article 1020.05(c)(5)e. and Article 1020.05(c)(5)f. of the Standard Specifications.

The amount of finely divided minerals to mitigate the risk of alkali-silica reaction in concrete shall be according to Article 1020.05(d)(2) of the Standard Specifications.

The Qualified Producer List of Finely Divided Minerals (link embedded) may be found on the Internet under "Qualified Product Lists" at the following link: http://www.idot.illinois.gov/doing-business/material-approvals/cement/index

4.1.3 Aggregates

The fine aggregate shall be from an AGCS source and conform to the requirements for fine aggregate for portland cement concrete and mortar according to Article 1003.02 of the Standard Specifications.

The coarse aggregate shall be from an AGCS source, shall meet the requirements for superstructure concrete, and gradations shall be according to Table 1 of Article 1020.04 of the Standard Specifications. Superstructure aggregate shall be Class A quality containing no more than 2% total by weight (mass) of deleterious materials. Deleterious materials shall include substances whose disintegration is accompanied by an increase in volume which may cause spalling of the concrete.

The current Approved/Qualified Producer List of Aggregate Sources (link embedded) is available on the Internet under "Qualified Product Lists" at the following link: http://www.idot.illinois.gov/doing-business/material-approvals/aggregate/index

An exception will be granted for the AGCS program if the Producer is the responsibility of the Central Bureau of Materials. However, an exception will not be given for the aggregate quality requirement. The Department's AGCS program may be substituted with another state agency's aggregate gradation control system program, if determined to be comparable to the Department's program. At this time, Indiana's Certified Aggregate Program (CAP) and Michigan's Prequalified Supplier Program for Aggregates are considered to be comparable to the Department's program.

To obtain an AGCS exception, the Producer shall indicate that the aggregate source is not in Illinois and does not participate in the AGCS program or comparable program. In addition, the acceptable gradation bands of the aggregate shall be established by the Producer, and this information shall be provided to the Department. Approval of the coarse aggregate gradation bands will be given if the critical sieve, as determined by the Inspector, does not exceed ±8%. Approval of the fine aggregate gradation bands will be given by the Inspector if no sieve exceeds ±20%.

The Producer shall sample the coarse aggregate and perform sieve analyses as required by Section 1.2.4 during the progress of the work, and as necessary to ensure that reasonable control of the gradation is maintained during the handling and batching. Sieve analyses shall be reported only when performed and shall not be repeated on successive reports of inspection. Excessive accumulations of dust in the bin, which may enter into individual batches, shall be guarded against.

Aggregate stockpiling and handling shall be according to the document on "Stockpiling and Handling of Aggregate" in the Manual of Test Procedures for Materials.

4.1.4 Water

Water from sources suitable for drinking may be accepted for use without being tested. Water from other sources, not previously approved, shall be sampled and tested according to Article 1002.02 of the Standard Specifications.

4.1.5 Admixtures

All admixtures shall be from the Department's "Qualified Product List of Concrete Admixtures" or "Qualified Product List of Corrosion Inhibitors" (links embedded). The current lists are available on the Internet under "Qualified Product Lists" at the following link: http://www.idot.illinois.gov/doing-business/material-approvals/concrete/index

If noted on the design plans, a corrosion inhibitor shall be added according to Article 1020.05(b)(10). Calcium nitrite corrosion inhibitor will also act as an accelerator.

SECTION 4.2 – REINFORCING STEELS

The steel strand, reinforcement, and auxiliary bars shall be according to Articles 504.02 and 639.02 of the Standard Specifications. Steel wire or straight rod shall have a diameter less than #3 reinforcement bar and shall be according to AASHTO M 32 or ASTM A 36. The use of auxiliary bars and steel wire or rod is discussed in Section 3.2.1.

4.2.1 Prestressing Steel Strand

Except as otherwise approved by the Inspector, each strand reel shall be identified by heat number and reel number. Each strand reel shall have a tag showing the modulus of elasticity recommended for calculating elongation.

Strands from more than one source shall not be used in any one tensioning operation.

The Producer shall furnish to the Inspector, as directed, one test sample of two 4 ft. (1.5 m) lengths cut from each coil or reel with a torch in a manner that will weld or fuse together the ends of the individual wires of the strand. Samples shall be taken at the Prestressed Concrete Producer's plant or yard from coils or reels intended for use in only IDOT, Illinois Local Agency, or Illinois Tollway projects. Samples shall be identified by heat number and reel number, except as otherwise approved by the Inspector. They shall not be coiled for shipment to the laboratory for testing.

All strands shall be clean according to Article 1006.10 of the Standard Specifications. Strands having kinks, bends, nicks, or other defects shall not be used.

4.2.2 Reinforcement

Reinforcement bars and welded wire reinforcement fabric shall be obtained from sources on the Department's "Qualified Producer List of Certified A706 Reinforcing Bar and/or Dowel Bar" and "Qualified Producer List of Certified Welded Wire Reinforcement" (links embedded). Epoxy coated reinforcement bars and epoxy coated welded wire reinforcement shall be obtained from approved sources on the Department's "Qualified Producer List of Certified Epoxy Coating Plants" (link embedded); epoxy coated welded wire reinforcement can be manufactured by those producers capable of "Custom" line types. Each of these lists can be found under "Qualified Product Lists" at the following link: http://idot.illinois.gov/doing-business/material-approvals/metals/index

When reinforcement bars are to be epoxy coated, auxiliary bars shall also be epoxy coated. Furnishing and installation of reinforcement shall comply with Section 3.2. Storage and protection of reinforcement for products shall be according to Article 508.03 of the Standard Specifications.

For each IL-beam project, the Producer shall furnish to the Inspector test samples of welded wire reinforcement as outlined in Section 7.4.2 and Appendix G of Policy Memorandum "Epoxy Coating Plant Certification Procedure," which can be found under "Procedures" at the following link: http://idot.illinois.gov/doing-business/material-approvals/metals/index

All reinforcement bars shall be clean according to Article 1006.10 of the Standard Specifications.

4.2.3 Steel Wire or Straight Rod

When reinforcement bars are epoxy coated, steel wire or straight rod shall be epoxy coated or galvanized. The epoxy coating shall be according to ASTM A 884 with a minimum coating of 7 mils (175μm). The galvanization shall be according to either AASHTO M 111 or M 232. The patching and repair of cut, bent, or damaged epoxy coated steel wire or straight rod shall be with a two-part epoxy according to ASTM D 3936 (Article 508.04). Aerosol can type epoxies are not permitted. The patching and repair of cut, bent, or damaged galvanized steel wire or straight rod shall be according to ASTM A 780.

SECTION 4.3 – MISCELLANEOUS ACCESSORIES

4.3.1 General

Lifting devices, inserts, bearing plates, tie rod tubes, dowel bar tubes, angles, and void tube drains shall be fabricated and anchored or tied in place, as shown on the plans, and shall comply with the applicable provisions of the Standard Specifications.

All metal hardware cast into concrete, such as inserts, brackets, cable clamps, metal casings for formed holes, and other miscellaneous items shall conform to Article 1006.13 of the Standard Specifications and as stated herein. This specification requires hot dipped galvanizing according to AASHTO M 111 or M 232 and specifies permitted insert types and proof loads. Ends of items that have been cut, such as metal casings for formed holes, and other metal hardware that has an area or areas for which the galvanizing has been compromised shall be touched up with two coats of zinc dust spray or paint meeting the requirements of ASTM A 780. Typical materials used for formed holes include thin galvanized metal casings and PVC pipe sections. If PVC pipe sections used for formed holes remain in place after fabrication, their inside diameter shall match that specified on the contract plans.

Transverse tie rod assemblies and dowel rods for deck beams shall conform to the Guide Bridge Special Provision “Concrete Deck Beams”. Steel tie rod assemblies shall be according to ASTM F 1554 Grade 55 (Grade 380). After fabrication, the transverse tie assemblies shall be hot dipped galvanized according to AASHTO M 232. The small articles may be zinc coated according to AASHTO M 298, Class 50.

Dowel rods shall be according to ASTM F 1554 Grade 55 (Grade 380) or A 706 Grade 60 (Grade 414). Dowels shall either be epoxy coated according to AASHTO M 284 or galvanized according to AASHTO M 111.

Void tubes shall comply with Section 3.2.5. Void tubes damaged during storage, exposure to the elements, or handling shall not be used unless repaired.

Strand vises shall be capable of anchoring the strand without slippage after seating. Steel cores for vises shall be proof tested by the manufacturer to at least 90% of the ultimate strength of the strand. Chucks shall be maintained in serviceable condition, and any that become visibly worn or distorted or show evidence of allowing post-seating slippage of the strand shall be discarded.

SECTION 4.4 – REPORTS AND RECORDS

4.4.1 General

The reports listed below and found in Appendix A shall collectively comprise the Final Report, which is required for each contract. Computer generated reports will be provided by the Department.

The Producer shall maintain a diary of all activities related to product sampling, testing, repairs, corrective action, and essential observations not provided for on the reports. The Producer shall retain diary records for a minimum period of three years.

The Producer shall retain quality control test records and equipment calibration records for a minimum period of three years. The Producer shall retain copies of purchase orders and/or invoices for all materials for a minimum period of two years. The Producer shall retain Quality System Manuals (discontinued), shop drawings, shipping records, etc. for a minimum period of three years.

4.4.2 Recordkeeping Procedure

For each contract, the Producer shall complete the following reports:

(1) Final Report Cover Sheet
(2) Sources and Quantities in Mix
(3) Prestress Concrete Beam Pour
(4) Deck Beam/I-Beam/Bulb T-Beam Tolerance Report
(5) Correction for Group I and Group II Effects on Strand Elongations
(6) Correction for Group I Effects on Strand Forces
(7) Field Tensioning Report for Deck Beam/I-Beam/Bulb T-Beam
(8) Correction for Anchorage Movement Effect on Strand Elongations and Loads
(9) Correction for Self-Stressing Bed Effects on Strand Elongations and Loads (if applicable)
(10) Correction for Thermal Effects on Strand Elongations and Loads

The individual reports collectively comprise the Final Report. The Final Report shall be submitted to the Inspector for review 72-hours prior to shipment of the beams to the jobsite. The Inspector will review the Final Report and sign the Final Report Cover Sheet. The QC Manager shall also review the Final Report and sign the Final Report Cover Sheet.

One copy of the Final Report shall be forwarded to the Central Bureau of Materials, where it will be archived for a minimum of ten years. The original signed copy of the Final Report Cover Sheet, along with the remaining forms in the Final Report, shall be retained for three years at the plant. With the exception of the original signed copy of the Final Report Cover Sheet, the report may be stored in a digital format at the plant.

One copy of all BMPR Form PS02's, remedies, and the approval/denial documentation shall be retained for three years at the Producer's plant by the Inspector.

4.4.3 Materials Integrated System for Test Information and Communication (MISTIC)

MISTIC is a database for tracking the use of approved materials. The Inspector is advised that prestressed products are accepted on plant tests, but these tests are not entered into MISTIC. To enter an assignment for a prestressed product into MISTIC, use VIS to make the assignment, even though the Manual for Materials Inspection indicates that prestressed products are accepted by TEST. In addition, when making assignments, the following material code numbers are used:

#27601 Beams, I, Bridge, Precast Prestressed Concrete
#27602 Beams, Bulb T, Bridge, Precast Prestressed Concrete
#27603 Beams, IL N, Bridge, Precast Prestressed Concrete (Narrow Flange)
#27604 Beams, IL W, Bridge Precast Prestressed Concrete (Wide Flange)
#27701 Beams, Deck, Bridge, Precast Prestressed Concrete
#27702 Beams, Deck, Bridge, Solid Profile, Precast Prestressed Concrete
#27805 Post, Precast Prestressed Concrete Noise Abatement
#27806 Panel, Precast Prestressed Concrete (Sight Screen)
#33701 Pole, Light, Precast Prestressed Concrete
#36602 Piling, Prestressed Precast Concrete
#47751 Pipe, Concrete Prestressed Cylinder, Lined, ANSI/AWWA C301
#47752 Pipe, Concrete Prestressed Cylinder, Embedded, ANSI/AWWA C301

For more information on MISTIC or to get a new material code created, contact the Central Bureau of Materials.

DIVISION 5 – WELDING

SECTION 5.1 – WELDING

5.1.1 General

Tying of reinforcement bar shall be according to Article 508.05 and Section 3.1.1. Welding will be permitted only at specific bar intersections previously approved by the Engineer. Drawings indicating previously approved locations for welds have been included in Appendix A.

The Producer will be required to submit and receive approval from the Engineer for alternate welding patterns if other than those in Appendix A. The Producer shall include all approved welding locations in the currently approved QSM by PCI.

Welders and welding procedures shall be qualified by tests described herein prior to welding reinforcing steel.

Welding will be permitted only at specific bar intersections previously approved by the Engineer. Splicing of the reinforcing steel by welding will not be permitted. Although there are no calculated strength requirements, the welds shall be adequate to hold the crossing bars in position during the placement of concrete. A low current shall be used to avoid notching and undercutting while still providing a weld with fusion to both bars and minimal porosity or slag inclusions. Whenever there are indications of gross porosity or inclusions, cracks, lack of fusion to either bar, or undercutting of the bars more than $\frac{1}{16}$ in. (2 mm), the weld shall be removed by grinding and replaced to the Inspector's satisfaction or the damaged bars shall be replaced as directed.

Welding shall not be done when the ambient temperature is below 20° F (-7° C), when surfaces are wet or exposed to rain, snow, or high winds, or when welders are exposed to inclement weather. When the temperature is below 50° F (10° C), bars within 2 in. (50 mm) of each joint shall be preheated to at least 50° F (10° C).

Welding shall be done by the shielded metal arc process using only low hydrogen classifications E 7018 or E 7028. Alternate welding procedures may be performed according to the "American Welding Society D1.4 – Structural Welding Code – Reinforcing Steel." The Producer shall make the document available to the Inspector.

The electrodes shall be stored in either unopened hermetically sealed containers or storage ovens held at a minimum temperature of 250° F (118° C). Electrodes not used within 4-hours after either opening the hermetically sealed containers or removal from the storage oven shall be re-dried for at least 4-hours in the storage oven before use. Storage ovens shall be systematically stocked and monitored so electrodes are only re-dried once. Previously re-dried electrodes exposed more than 4-hours shall be discarded. Electrodes which have been wet or have lost some of their coating shall also be discarded.

5.1.2 Procedure Qualification

The Producer shall qualify a weld procedure to be used in fabrication. The procedure shall indicate the type and size of electrode, type of current, polarity, and amperage. A minimum of four intersection specimens shall be made using the parameters of the proposed

procedure. Each intact specimen shall be inspected visually and then the specimen shall have bars broken apart to examine fusion areas. Each specimen shall indicate no evidence of cracks, gross porosity or inclusions, lack of fusion to either bar, or show undercut exceeding $\frac{1}{16}$ in. (2 mm) in either bar. In the case of one specimen failing any of the above, an additional set of four specimens shall be prepared and shall not indicate any of the above discontinuities. If any specimen of the second set of four shows discontinuities, the Producer shall be required to submit another procedure for qualification.

5.1.3 Welder Qualification

Each production welder shall qualify by welding a minimum of four specimens using a qualified procedure (amperage within ±15% of that indicated in the procedure). Each specimen shall be free of rejectable discontinuities per Section 5.1.2. If any specimens are rejected, the welder may weld 4 additional specimens which shall all be acceptable. Rejection of any of the second 4 specimens requires the welder to wait 30-days and show written evidence of additional training before retesting.

Tests for qualifying procedures and welders shall be done in the presence of the Inspector. The Producer shall request such inspection at least 5 working days in advance. Samples shall be composed of two bars of each size used in the members. All test specimens shall be sent to the Central Bureau of Materials for evaluation per Section 5.1.2 and determination of qualification. The same weld test may be used to qualify the procedure and a welder if specified on the form accompanying the specimen's submittal. Form BMPR PS01 is to be used for the welding procedures and welder qualification tests and is to be submitted to the Central Bureau of Materials. The Bureau of Materials will forward a copy to the Bureau of Bridges and Structures for comment. A sample of Form BMPR PS01 is provided in Appendix A.

Once qualified, weld procedures are valid indefinitely unless repeated rejections of production welds lead the Inspector to require requalification or a new procedure. Welder qualification is also valid indefinitely, subject to written evidence of the welder's continuing use of the process at least every 6-months, unless the Inspector revokes qualification based on gross or recurring nonconformance.

This Page Intentionally Left Blank

APPENDIX A

Tables of Standard Prestressing Loads for Various Strands ..... A – 3
Table of Decimal Equivalents ..... A – 4
Procedure to Remedy an Unacceptable Prestressed Product at the Plant ..... A – 5
Procedure to Remedy an Unacceptable Prestressed Product at the Jobsite ..... A – 7
Form BMPR PS02 – Notice of Unacceptable Product at Plant or Jobsite ..... A – 9
Form BMPR PS03 – Inspection Feedback to Precast Prestressed Concrete Producer ..... A – 10
*Final Report ..... A – 11
*Sources and Quantities in Mix ..... A – 12
*Prestress Concrete Beam Pour ..... A – 13
*Deck Beam Tolerance Report ..... A – 14
*I- and Bulb T-Beam Tolerance Report ..... A – 15
*Correction for Group I and Group II Effects on Strand Elongations ..... A – 16
*Correction for Group I Effects on Strand Forces ..... A – 17
*Field Tensioning Report for Deck Beams ..... A – 18
*Field Tensioning Report for I- and Bulb T-Beams ..... A – 19
*Correction for Anchorage Movement Effects on Strand Elongations and Loads ..... A – 20
*Correction for Self-Stressing Bed Effects on Strand Elongations and Loads ..... A – 21
*Correction for Thermal Effects on Strand Elongations and Loads ..... A – 22
Point Block Detail ..... A – 23
Fabrication Tolerances for Deck Beams (English) ..... A – 24
Fabrication Tolerances for Deck Beams (Metric) ..... A – 25
Fabrication Tolerances for I-Beams, Bulb T-Beams, and IL-Beams (English) ..... A – 26
Fabrication Tolerances for I-Beams, Bulb T-Beams, and IL-Beams (Metric) ..... A – 27
Alternate Straight Top Strand Placement for IL-Beams with G2(E) Bars (English) ..... A – 28
Alternate Top Flange Reinforcement for IL36 – IL72 Beams (English) ..... A – 29
Alternate Bottom Flange WWR for IL-Beams (English) ..... A – 30
WWR Placement Tolerances for IL27 Beams (English) ..... A – 31
WWR Placement Tolerances for IL36 – IL72 Beams (English) ..... A – 32
Alternate Rebar Substitution for WWR in IL27 – IL72 Beams ..... A – 33
3-page detail for IL27 Beams:
Alternate Bottom Splitting Plate Details for IL27 Beams Without Bearings ..... A – 34
Alternate Bottom Splitting Plate Details for IL27 Beams With Bearings ..... A – 35
Construction Sequence for Alternate Threaded #3 Bars ..... A – 36

3-page detail for IL36 – IL72 Beams:

Alternate Bottom Splitting Plate Details for IL36 – IL72 Beams Without Bearings... A – 37

Alternate Bottom Splitting Plate Details for IL36 – IL72 Beams With Bearings..... A – 38

Construction Sequence for Alternate Threaded #3 Bars..... A - 39

Permanent Bracing for PPC Beams ..... A – 40

Permanent Bracing for 36 in. and 42 in. I-Beams (English) ..... A – 41

Permanent Bracing for 36 in. and 42 in. I-Beams (Metric) ..... A – 42

Permanent Bracing for 48 in. Thru 72 in. Beams (English) ..... A – 43

Permanent Bracing for 48 in. Thru 72 in. Beams (Metric) ..... A – 44

Permanent Bracing for 27 in. and 36 in. IL-Beams (English) ..... A – 45

Permanent Bracing for 45 in. Thru 72 in. IL-Beams (English)..... A – 46

G6 Bar Fabrication Tolerances for I-Beams and Bulb T-Beams (English) ..... A – 47

G6 Bar Fabrication Tolerances for I-Beams and Bulb T-Beams, Detail A (English)..... A – 48

G6 Bar Fabrication Tolerances for I-Beams and Bulb T-Beams (Metric) ..... A – 49

G6 Bar Fabrication Tolerances for I-Beams and Bulb T-Beams, Detail A (Metric)..... A – 50

Cross Sections Thru Lifting Loop at Conduit Pipe ..... A – 51

Theory and Methods – Calibration and Practice – Anchorage Movement ..... A – 53

Theory and Methods – Calibration, Practice, and Maximum Number Strands Permitted – Self-Stressing Beds/Forms..... A – 58

Permissible Crack Types for PPC Deck Beams ..... A – 63

Permissible Crack Types for PPC I- and Bulb T-Beams..... A – 64

Form BMPR PS01 – Qualification Test for Welders and Welding Procedures..... A – 65

Acceptable Welding Locations for I-Beams..... A – 66

Acceptable Welding Locations for Bulb T-Beams..... A – 67

Guidelines and General Information for Department Personnel During PCI Audits ..... A – 69

* Note that the spreadsheets images included here in Appendix A are from the Department's General Prestressing Spreadsheet. Not shown herein, is the IL-Beams Prestressing Spreadsheet, which is a version of the general prestressing spreadsheet modified specifically for IL-beams, and thus, very similar in look and design. Both spreadsheets can be found under "References" and "Guides/Spreadsheets" at the following link: http://www.idot.illinois.gov/doing-business/material-approvals/precast-prestress/index.

TABLES OF STANDARD PRESTRESSING LOADS FOR VARIOUS STRANDS

* F_u = 270 ksi (Grade 270) (English)			
Nominal Diameter in.	Nominal Steel Area sq. in.	Total Prestressing Load lb.	
		Stress Relieved	Low – Relaxation
3/8	0.085	16,000	17,200
7/16	0.115	21,700	23,200
1/2	0.153	28,900	30,900
6/10	0.217	---	43,900

* F_u = 1860 MPa (Grade 270) (Metric)			
Nominal Diameter mm	Nominal Steel Area sq. mm	Total Prestressing Load N	
		Stress Relieved	Low – Relaxation
9.53	54.84	71,400	76,500
11.11	74.19	96,600	103,500
12.70	98.71	128,500	137,700
15.24	140.00	---	195,300

* F_u = Minimum specified ultimate tensile strength.

TABLE OF DECIMAL EQUIVALENTS (English Units)

Fraction	Decimal Equivalent
1/16	0.0625
1/8	0.1250
3/16	0.1875
1/4	0.2500
5/16	0.3125
3/8	0.3750
7/16	0.4375
1/2	0.5000
9/16	0.5625
5/8	0.6250
11/16	0.6875
3/4	0.7500
13/16	0.8125
7/8	0.8750
15/16	0.9375
1	1.0000

Procedure to Remedy an Unacceptable Precast or Precast Prestressed Product at the Plant

Step 1: If the Producer decides to reject and replace a product at the Producer's plant, the Producer shall notify the Inspector in writing and no BMPR PS02 form is required. If the Producer and/or Inspector determine that a precast or precast prestressed product at the Producer's plant is unacceptable and the Producer intends to submit a remedy proposal, the Inspector will complete Form BMPR PS02. The Producer may submit a remedy for the unacceptable product according to Article 105.03 of the Standard Specifications. The Producer shall promptly notify the Department if a remedy will be submitted.

Step 2: If the Producer desires to remedy the unacceptable product, the Producer shall submit in writing, the following information in a timely manner and well before anticipated delivery of the product:

a) Form BMPR PS02.
b) An explanation of why the defect occurred and how it will be prevented in the future.
c) The repair method and sequence.
d) The time required to perform the repair, if more than one day.
e) Quality control testing to be performed on the repair materials, or state "none to be performed."
f) A technical data sheet for each material to be used.
g) The business entity that will do the repair if other than the Producer.
h) Provide applicable structural computations which have been sealed by a licensed Illinois Structural Engineer retained by the Producer. The licensed Illinois Structural Engineer retained by the Producer will not be permitted to become the Engineer of Record (EOR) for acceptance of the product.
i) For Local Agency projects only, the contact person and email address. For County Engineers, the Producer may want to refer to www.iaceng.org for this information.

Step 3: The Inspector will verify the accuracy of the information submitted. The inspecting District Office (Materials Engineer or Physical Test Engineer) will correspond with the Owner and provide them the remedy. The Owner is defined as the receiving District Office or Local Agency. For the receiving District Office, the Materials Engineer should be contacted.

Step 4: The Owner will determine if the proposed remedy may be considered, or it may reject the product. Reasons for rejection include, but are not limited to, the product will not perform as intended (diminished service life) or there are excessive occurrences of manufacturing defects by the Producer. For District projects, the District Bridge Maintenance Engineer should be consulted when determining whether the service life may be diminished.

Step 5: If the Owner determines the proposed remedy will be considered, a copy of the proposed remedy shall be forwarded to the Bureau of Bridges and Structures (BBS) for review. However, a Local Agency, at its option, may conduct its own review and determine approval/disapproval of the remedy request. In these cases, the Local Agency shall obtain documentation of approval with the EOR or a licensed Illinois Structural Engineer not retained by the Producer. If this option is chosen, then the remedy procedure continues with Step 8.

Step 6: BBS will review the remedy for structural adequacy and, if necessary, coordinate their review with the EOR for the Department or Local Agency. If necessary, BBS will consult with the Central Bureau of Materials and provide a copy of the proposed remedy for review. The Bureau of Materials will notify BBS if the materials are acceptable and may provide other

information as appropriate. The review by the Central Office (BBS and Bureau of Materials) will be based on applicable codes and Departmental policies and experience.

Step 7: BBS will notify the Owner of the Central Office's recommendations. However, final approval/rejection will be determined by the Owner. For approval, precast and precast prestressed products shall have structural adequacy as determined by BBS, satisfactory materials as determined by the Central Bureau of Materials, and no diminished service life as determined by the Owner.

Step 8: The Owner will notify the inspecting District Office if they approve or reject the proposed remedy and shall copy BBS. If a Local Agency conducts its own review to determine approval/rejection of the remedy request, the documentation copied to the BBS (for record keeping purposes only) from the Local Agency shall include any computations or any other documentation/statements supporting the decision from the EOR or a licensed Illinois Structural Engineer not retained by the Producer. The District will forward the remedy resolution to the District Bridge Maintenance Engineer—or, if a Local Agency structure, the Owner will retain a copy—to keep with the bridge file for this structure to ensure the condition rating inspector has access to this information.

Step 9: The Producer may proceed with the repair if approved. Since the Owner has incurred engineering costs to review and process the remedy and may need to monitor the repair and perform additional maintenance, a contract price adjustment may be appropriate according to Article 105.03. The Owner will be responsible for discussing the contract price adjustment with the Contractor. In regard to a contract price adjustment, it is assumed that the Contractor has discussed it with the Producer. The Producer shall then make arrangements with the Inspector to have the repair inspected. The repair shall be done at the convenience of the Inspector.

Step 10: The Inspector will witness and inspect the repair and perform any required quality assurance testing. When required, the Central Bureau of Materials will provide quality assurance testing to be used by the Inspector. Once the repair is completed and all quality control test results have been provided to the Inspector, the Producer may request the product be approved. The Inspector will approve the repair if the agreed Department requirements have been met. The Inspector will then stamp the product "ILL OK" if all contract specification requirements have been met. Repair work which fails to meet the requirements will be administered according to Article 105.03.

Step 11: The Inspector should discuss corrective measures with the Producer to avoid future defects. The Inspector should explain to the Producer that future defects (within reason) will not be tolerated, product will be rejected, and proposed remedies may be denied.

Note: The same procedure above shall be used when the Central Bureau of Materials is responsible for inspection instead of the District.

Procedure to Remedy an Unacceptable Precast or Precast Prestressed Product at the Jobsite

Step 1: If the Resident determines a precast or precast prestressed product at the jobsite is unacceptable according to, the BMPR Policy Memorandum, "Quality Control/Quality Assurance Program for Precast Concrete Products," or Article 504.06(a), as applicable, Form BMPR PS02 will be completed and a copy given to the Contractor. The Contractor may remove and replace the product or submit a remedy for the unacceptable product according to Article 105.03 of the Standard Specifications. If the Contractor decides to remove and replace the product, the Contractor shall notify the Resident and the remedy procedure is terminated. For cases where a product arrives at the jobsite without an ILL OK stamp, see Section 3.6.3.

Step 2: If the Contractor desires to remedy the unacceptable product, the Contractor shall submit in writing, the following information:

a) Form BMPR PS02.
b) An explanation of why the defect occurred and how it will be prevented in the future.
c) The repair method and sequence.
d) The time required to perform the repair, if more than one day.
e) Quality control testing to be performed on the repair materials or state "none to be performed."
f) A technical data sheet for each material to be used.
g) The business entity that will do the repair if other than the Contractor.
h) Provide applicable structural computations which have been sealed by a licensed Illinois Structural Engineer retained by the Contractor or Producer. The licensed Illinois Structural Engineer retained by the Contractor or Producer will not be permitted to become the Engineer of Record (EOR) for acceptance of the product.

Step 3: The Resident will verify the accuracy of the information submitted.

Step 4: The District Office or Local Agency will determine if the proposed remedy may be considered, or it may reject the product. Reasons for rejection include, but are not limited to, the product will not perform as intended (diminished service life). For District projects, the District Bridge Maintenance Engineer should be consulted when determining whether the service life may be diminished.

Step 5: If the District Office or Local Agency determines the proposed remedy will be considered, a copy of the proposed remedy shall be forwarded to the Bureau of Bridges and Structures (BBS) for review. However, a Local Agency, at its option, may conduct its own review and determine approval/disapproval of the remedy request. In these cases, the Local Agency shall obtain documentation of approval with the EOR or a licensed Illinois Structural Engineer not retained by the Producer. If this option is chosen, then the remedy procedure continues with Step 8.

Step 6: BBS will review the remedy for structural adequacy and, if necessary, coordinate their review with the EOR for the Department or Local Agency. If necessary, BBS will consult with the Central Bureau of Materials and provide a copy of the proposed remedy for review. The Bureau of Materials will notify BBS if the materials are acceptable and may provide other information as appropriate. The review by the Central Office (BBS and Bureau of Materials) will be based on applicable codes and Departmental policies and experience.

Step 7: BBS will notify the District Office or Local Agency of the Central Office's recommendations. However, final approval/rejection will be determined by the District Office or

Local Agency. For approval, precast and precast prestressed products shall have structural adequacy as determined by BBS, satisfactory materials as determined by the Central Bureau of Materials, and no diminished service life as determined by the District Office or Local Agency.

Step 8: The District Office or Local Agency will notify the Contractor if they approve or reject the proposed remedy and shall copy BBS. If a Local Agency conducts its own review to determine approval/rejection of the remedy request, the documentation copied to the BBS (for record keeping purposes only) from the Local Agency shall include any computations or any other documentation/statements supporting the decision from the EOR or a licensed Illinois Structural Engineer not retained by the Producer. The District Office or Local Agency will record the remedy resolution in the bridge file for this structure to ensure the condition rating inspector has access to this information.

Step 9: The Contractor may proceed with the repair if approved. Since the District Office or Local Agency has incurred engineering costs to review and process the remedy and may need to monitor the repair and perform additional maintenance, a contract price adjustment may be appropriate according to Article 105.03. The Contractor shall then make arrangements with the Resident to have the repair inspected. The repair shall be done at the convenience of the Resident.

Step 10: The Resident will witness and inspect the repair and perform any required quality assurance testing. When required, the Central Bureau of Materials will provide quality assurance testing to be used by the Resident. Once the repair is completed and all quality control test results have been provided to the Resident, the Contractor may request the product be accepted. The Resident will accept the product if the agreed Department requirements have been met. Repair work which fails to meet the requirements will be administered according to Article 105.03.

Step 11: The Resident should discuss corrective measures with the Contractor to avoid future defects. The corrective measures may apply to the Contractor or the Producer who supplied the product to the Contractor. The Resident should explain to the Contractor that future defects (within reason) will not be tolerated, product will be rejected, and proposed remedies may be denied.

Illinois Department of Transportation

Notice of Unacceptable Product at Plant or Jobsite

Instructions: This form is to be completed if the Producer at the plant or Contractor at the jobsite intends to submit a remedy proposal. Items marked with an asterisk (*) may not apply to non-prestressed precast products.

Precast or Precast Prestressed Concrete Product _____ Date _____

Plant Name/Location _____ Contract No. _____

Specified Size _____ County _____

Producer Job No. _____ Section _____

Beam Number(s)* _____ Date Poured _____ Route _____

Structure Number* _____ Job No. _____

Receiving District/Agency _____ Project _____

State defects and, if practical, sketch and dimension the damaged area. Photograph(s) should also be included.

IDOT Inspector Name (Print): _____

IDOT Inspector Signature _____ Date _____

Original: Maintained at Plant Location for PCI Audit* (Send to Department Inspector at Plant if problem identified at jobsite.)
Copies to: Producer (for product(s) at Plant)
Contractor (for product(s) at Jobsite)
District Office performing inspection (Materials Engineer)
Individual who completed form

BMPR PS02 (Rev. 01/01/15)

Illinois Department of Transportation

Inspection Feedback to Precast Prestressed Concrete Producer

***Instructions*:** This form is required to be completed a minimum of once a month by the Department Inspector at the Precast Prestressed Concrete Plant. Other Department personnel who visit the plant and perform an inspection may complete this form. Department field personnel (e.g., resident engineers) may complete this form if problems are identified in the field. This form is intended to provide the Producer customer feedback as part of the Precast/Prestressed Concrete Institute (PCI) Plant Certification Program. The Inspector is to identify quality control issues involving Department products. For example, the Inspector should identify where more attention is needed because specifications are not being met, or will not be met if corrective action is not taken. If an issue is a repeat occurrence within the past twelve months, indicate the date it was previously documented. Problems identified on form BMPR PS02 should not be repeated on this form. If there are no issues, this should also be documented. Use as many sheets as necessary to provide feedback, since it may be easier to list one issue on each sheet.

Plant Name/Location _____

Department Feedback:

_____
_____
_____
_____
_____
_____
_____
_____
_____
_____

Name (Print): _____

Signature: _____ Date _____

Producer Response (optional):
Instructions: The Producer will be allowed 14 calendar days from the signed date above to respond. After this time, it will be assumed the Producer chose not to respond.

_____
_____
_____
_____
_____
_____
_____
_____
_____
_____

Name (Print): _____

Signature: _____ Date _____

Original: Maintained at Plant Location for PCI Audit (Copies distributed by Department Inspector at Plant since Producer may have response.)
Copies to: District Office performing inspection (Materials Engineer)
Department Inspector at Plant
Individual providing feedback, if not Department Inspector at Plant

BMPR PS03 (Rev. 11/17/09)

Final

Revised 10/10/11

Illinois Department of Transportation

Bureau of Materials & Physical Research

FINAL REPORT

Report of Inspection of Precast Prestressed Concrete

Manufactured by:		Number and Size Description	BEAMS:	Date:
Address:		Each		
Contractor:				County:
Consignee:				Section:
Consignee Location:				Route:
Producers Job# / Bed#:				Job No.:
Structure No.:				Project:
Structure No 2:				Rd.Dist.:
				Contract
Date Shipped:				

Beams: Total:

Test Results

Attached are copies of the individual BEAM inspection reports with detailed measurements and test results.

Report Numbers:

ID Beam Numbers :

Remarks:

On the basis of our observations and tests, the above beams comply with the specification requirements. Resident shall inspect beams for damage during transit and erection.

Signature: _____

Inspected by:

Copies to:

This material is accepted and stamped Ill.-OK

Signature: _____

Reviewed By:

Source

Revised 10/10/11

Illinois Department of Transportation

Bureau of Materials & Physical Research

PLANT INSPECTION REPORT FOR PRECAST PRESTRESSED CONCRETE UNITS

SOURCES AND QUANTITIES IN MIX

Beam Job No.:		Beam No.:	1		5	
Report:			2		6	
Beam Code No.:			3		7	
Beam Name:			4		8	
Payment Measure:		Deck Beams:				
Producer:		I Beams:				
P/S #:		Piling:				
Contractor:		Bulb Tees:				
Weather:		Retaining Wall:				
Bed No.:		Deck Planks:				
Length:	in.	Draped Strands:				

Date:	
Date Printed:	10/11/2011
Route:	
Section:	
Project:	
County:	
Contract:	
Job No.:	
Rd. Dist./City:	

Design#		Your Design No. (Optional)
Design#		IDOT Design Number

Job No:

Bed No.:

	CODE	ITEM	UNIT	QUANTITY	P/S #	P/S	P/S Loc	Notes
Cement								
Flyash								
CA 1								
CA 2								
FA								
AEA								
WRDA								
DCI								
RET								
SUPER								
MICRO								
WATER								

PRODUCERS AND SUPPLIERS OF NON-MIX COMPONENTS

CODE	ITEM	UNIT	Size/Quantity	P/S #	P/S	P/S Loc	NOTES

Remarks:

Inspector:

Pour Sheet 1 Job#/Bed#: ____ ____

Stop Air Temperature: ____ Degree F

ILLINOIS DEPT. OF TRANSPORTATION
PRESTRESS CONCRETE BEAM POUR

Revised 10/10/11

DATE: ____ DESIGN: ____

NUMBER: ____ REPORT: ____

COUNTY: ____ BED#: ____ INSP.: ____

	BEAM >>>	Pour:												Cure Type:	
		Pour Data 1	Pour Data2	Remarks	Pour Data 1	Pour Data2	Remarks	Pour Data 1	Pour Data 2	Remarks	Pour Data 1	Pour Data 2	Remarks	Started	
START TIME - hh:mm am:															
STOP TIME - hh:mm am:														Completed	
BURLAP TIME - hh:mm am:															
AIR TEMP.:	Degree F													Spec. Conc. Temp Range	
CONCRETE TEMP.:	Degree F													Degree F	
CUYDS PER BEAM:	cuyd/bm														Per Cu. Yd.
MIX CUYD/BATCH:	cuyd/btch														(Std. Measures)
CEMENT:	lbs/cuyd													Cement:	
FLY ASH:	lbs/cuyd													Fly Ash:	
COURSE AGG. 1:	lbs/cuyd													Coarse Agg:	
COURSE AGG. 2:	lbs/cuyd													Course Agg:	
FINE AGG.:	lbs/cuyd													Fine Agg:	
AEA:	oz/cwt													AEA:	
WRDA:	oz/cwt													WRDA:	
DCI :	oz/cwt													DCI:	
RETARDER :	oz/cwt													Retarder:	
SUPERPLASTIC.:	oz/cwt													Super:	
MICRO	lbs/cuyd													Micro:	
WATER:	gal/cuyd													Water:	
														Specified Max Slump	
															in.
														Specified Max Air	
															%
														Specified Min Air	
															%
SLUMP:	in.														
AIR:	%													Specified Cut	
CYLINDER 1 Load (Cut):				(Cut Date)			(Cut Date)			(Cut Date)			(Cut Date)		psi
STRENGTH (Reported)	psi													Specified Ship	
DATE mm/dd/yy:															psi
AGE:	hr.													Tarp Time:	
														Water/Steam:	
CYLINDER 2 Load (Cut):				(Cut Date)			(Cut Date)			(Cut Date)			(Cut Date)	Cut Strand:	
STRENGTH (Reported)	psi														
DATE mm/dd/yy:														Plan Yards:	
AGE:	hr.													Actual Yards:	
CYLINDER 3 Load (Ship):				(Ship Date)			(Ship Date)			(Ship Date)			(Ship Date)	Type:	
STRENGTH (Reported)	psi														
DATE mm/dd/yy:														Spec. Max. Internal Temp	
AGE:	hr.													Degree F	

REMARKS: ____

Inspector: ____

Box Tol

Revised 10/10/11

Illinois Department of Transportation

Bureau of Materials & Physical Research

PLANT INSPECTION REPORT FOR PRECAST PRESTRESSED CONCRETE UNITS

DECK BEAM TOLERANCE REPORT

Beam Job No.:		Beam No.:	1		5		Date:	
Report:			2		6		Date Printed:	10/11/2011
Beam Code No.:			3		7		Route:	
Beam Name:			4		8		Section:	
Payment Measure:		Deck Beams:					Project:	
Producer:		I Beams:					County:	
P/S #:		Piling:					Contract:	
Contractor:		Bulb Tees:					Job No.:	
Weather:		Retaining Wall:					Rd. Dist./City:	
Bed No.:		Deck Planks:						
Length:	in.	Draped Strands:						

Beam		Length		Width	Depths			Sweep	Camber	Stirrup Bars				D(E) Bars
		Left ft.-in.	Right ft.-in.	in.	Overall in.	Top Slab in.	Bot. Slab in.	in.	in.	Longitudinal Spacing	Vertical Alignment	End Stirrups	U and A Bars	@ Rail Anch
	Top:													
	Bottom:													
	Top:													
	Bottom:													
	Top:													
	Bottom:													
	Top:													
	Bottom:													
	Top:													
	Bottom:													
	Top:													
	Bottom:													
	Top:													
	Bottom:													

Beam	Tubes			End Squareness or Skew		Strand Position		Lifting Loops				Inserts		Beam Seat
	Void	Dowel	Tie Rod	Elevation	Plan	Pts. of Sup.	Other Loc.	From End of Beam	From Side of Beam	Projection Above Bm.	Ebmed-ment	Contract Plans	Contractor	Area

Note: Indicating OK or NG is acceptable for many of the input fields.

Remarks:

Inspected by:

Ibeam Tol

Revised 10/10/11

Illinois Department of Transportation

Bureau of Materials & Physical Research

PLANT INSPECTION REPORT FOR PRECAST PRESTRESSED CONCRETE UNITS

I- AND BULB T-BEAM TOLERANCE REPORT

Beam Job No.:		Beam No.:	1		5		Date:
Report:			2		6		Date Printed: 10/11/2011
Beam Code No.:			3		7		Route:
Beam Name:			4		8		Section:
Payment Measure:		Deck Beams:					Project:
Producer:		I Beams:					County:
P/S #:		Piling:					Contract:
Contractor:		Bulb Tees:					Job No.:
Weather:		Retaining Wall:					Rd. Dist./City:
Bed No.:		Deck Planks:					
Length:	in.	Draped Strands:					

Beam		Length		Widths		Depths			Sweep	Camber	Stirrup Bars			Splitting	Bear. Plate/
		Left ft.-in.	Right ft.-in.	Flanges in.	Web in.	Overall in.	Flanges in.	Web in.	in.	in.	Longitudinal Spacing	Vertical Alignment	Projection Above Bm.	Plate	Beam Seat Area
	Top:														
	Bottom:														
	Top:														
	Bottom:														
	Top:														
	Bottom:														
	Top:														
	Bottom:														
	Top:														
	Bottom:														
	Top:														
	Bottom:														
	Top:														
	Bottom:														
	Top:														
	Bottom:														

Beam	G6 Bars			End Squareness or Skew		Strand Position		Hold Down Devices	Lifting Loops				Inserts		Permanent Bracing	
	Projection	Horizontal	Vertical	Elevation	Plan	Pts. of Sup.	Other Loc.	Horiz. Align.	From End of Beam	From Side of Beam	Projection Above Bm.	Ebmed-ment	Contract Plans	Contractor	V and H Location	Different. Alignment

Note: Indicating OK or NG is acceptable for many of the input fields.

Remarks:

Inspected by:

Singlet Elongations

Revised 10/10/11

Illinois Department of Transportation

Bureau of Materials & Physical Research

PLANT INSPECTION REPORT FOR PRECAST PRESTRESSED CONCRETE UNITS

CORRECTION FOR GROUP I AND GROUP II EFFECTS ON STRAND ELONGATIONS

Beam Job No.:		Beam No.:	1		5		Date:	
Report:			2		6		Date Printed:	10/11/2011
Beam Code No.:			3		7		Route:	
Beam Name:			4		8		Section:	
Payment Measure:		Deck Beams:					Project:	
Producer:		I Beams:					County:	
P/S #:		Piling:					Contract:	
Contractor:		Bulb Tees:					Job No.:	
Weather:		Retaining Wall:					Rd. Dist./City:	
Bed No.:		Deck Planks:						
Length:	in.	Draped Strands:						

Definition of Variables

e = Basic strand elongation without corrections

e_{am} = Total elongation correction for anchorage movement per strand

e_{sb} = Total elongation correction for self-stressing bed per strand

e_t = Elongation correction due to temperature per strand

e_L = Elongation correction due to live end seating per strand

e_D = Elongation correction due to dead end seating per strand

e_{SP} = Elongation correction due to strand splice per strand

e_{OI} = Elongation correction due to other (Group I) per strand

e_{OII} = Elongation correction due to other (Group II) per strand

e_I = Total elongation correction for Group I losses per strand

e_{II} = Total elongation correction for Group II losses per strand

e_{CG} = Total gross corrected elongation per strand

e_{CN} = Total net corrected elongation per strand

A_s = Cross sectional area of strand

P_i = Design plan load

P_p = Preload

E_s = Modulus of elasticity of strand

L = Bed length (strand length between anchors)

Notes: Group I losses correct for load and elongation. Group II losses correct for elongation only.

Basic Elongation Data and Calculations

Basic Elongation $e = \frac{(P_i - P_p)\,L}{A_s E_s}$ in. L = in.

Strands	Reel/Pack	A_s Area (sq. in.)	E_s Mod. El. (psi)	P_i Design Load (lbs.)	P_p Preload (lbs.)	e (in.)
A						
B						
C						
D						

Summary of Group I and Group II Elongation Corrections

	Group I					Total	Group II			Total
	e_L	e_t	e_{am}	e_{sb}	e_{OI}	e_I	e_D	e_{SP}	e_{OII}	e_{II}
Strands	(in.)	(in.)	(in.)	(in.)	(in.)	(in.)	(in.)	(in.)	(in.)	(in.)
A										
B										
C										
D										

Summary of Group I and II Elongation Corrections Gross and Net

$e_{CG} = e + e_I + e_{II}$ in. $e_{CN} = e + e_I + e_{II} - e_L$ in.

Strand	e (in.)	e_I (in.)	e_{II} (in.)	e_{CG} (in.)	e_L (in.)	e_{CN} (in.)
A						
B						
C						
D						

Permitted Gross and Net Ranges for Corrected Elongations

Max Straight Strand e = e_{CG} or e_{CN} x 1.03 in. Max Draped Strand e = e_{CG} or e_{CN} x 1.05 in.

Min Straight Strand e = e_{CG} or e_{CN} x 0.97 in. Min Draped Strand e = e_{CG} or e_{CN} x 0.95 in.

Strand	Gross Range of Permitted Elongations (Fractional for English Units)					Net Range of Permitted Elongations (Fractional for English Units)				
	e_{CG}	Straight Strands		Draped Strands		e_{CN}	Straight Strands		Draped Strands	
	Corrected Gross (in.)	e_{CG}-3% Minimum	e_{CG}+3% Maximum	e_{CG}-5% Minimum	e_{CG}+5% Maximum	Corrected Net (in.)	e_{CN}-3% Minimum	e_{CN}+3% Maximum	e-5% Minimum	e+5% Maximum
A										
B										
C										
D										

Remarks:

Inspector:

Form LX-666

Singlet Forces

Revised 10/10/11

Illinois Department of Transportation
Bureau of Materials & Physical Research
PLANT INSPECTION REPORT FOR PRECAST PRESTRESSED CONCRETE UNITS
CORRECTION FOR GROUP I EFFECTS ON STRAND FORCES

Beam Job No.:		Beam No.:	1		5		Date:	
Report:			2		6		Date Printed:	10/11/2011
Beam Code No.:			3		7		Route:	
Beam Name:			4		8		Section:	
Payment Measure:		Deck Beams:					Project:	
Producer:		I Beams:					County:	
P/S #:		Piling:					Contract:	
Contractor:		Bulb Tees:					Job No.:	
Weather:		Retaining Wall:					Rd. Dist./City:	
Bed No.:		Deck Planks:						
Length:	in.	Draped Strands:						

Definition of Variables

e_{am} = Total elongation correction for anchorage movement per strand
e_{sb} = Total elongation correction for self-stressing bed per strand
e_t = Elongation correction due to temperature per strand
e_L = Elongation correction due to live end seating per strand
A_s = Cross sectional area of strand
L = Bed length (strand length between anchors)
E_s = Modulus of elasticity of strand
P_{max} = Maximum permitted pulling force for a strand (80% $F_u A_s$)
F_u = Minimum specified tensile strength of strand
a = Coefficient of expansion for steel

P_{am} = Force correction for anchorage movement per strand
P_{sb} = Force correction for self-stressing beds per strand
P_t = Force correction for thermal per strand
P_L = Force correction for live end seating per strand
P_{OI} = Force correction due to other (Group I) per strand
P_T = Total force correction for Group I per strand
P_i = Design plan load
P_{i+T} = Total corrected pulling force per strand
T_Δ = Maximum permitted temperature change
T_{min} = Minimum permitted temperature
T_1 = Air (Strand) temperature at time of tensioning

Notes: Group I losses correct for load and elongation. Group II losses correct for elongation only.

Calculations and Summary of Group I Force Corrections

Anchorage Movement $P_{am} = E_s\, e_{am}\, A_s / L$ lbs.
Self-Stressing Beds $P_{sb} = E_s\, e_{sb}\, A_s / L$ lbs.
Thermal $P_t = E_s\, e_t\, A_s / L$ lbs.
Live End Seating $P_L = E_s\, e_L\, A_s / L$ lbs.
Other Specifed by user

Strands	Reel/Pack	P_{am} (lbs.)	P_{sb} (lbs.)	P_t (lbs.)	P_L (lbs.)	P_{OI} (lbs.)	P_T (lbs.)
A							
B							
C							
D							

Corrected Loads, Maximum Permitted Loads, and Maximum Permitted Temperature

$P_{max} = 0.80 \times F_u \times A_s$ lbs.

$T_{min} = T_1 - T_\Delta$ Deg. F

$T_\Delta^{*} = (P_{max} - (P_{i+T} - P_L)) / (a \times E_s \times A_s)$ Deg. F

*Maximum permitted temperature change to not exceed P_{max} (5% temperature correction limitation applies to temperature sheet only.) Live end seating is not considered in this determination since it is not present after tensioning operations are completed.

**T_Δ and T_{min} assume thermal correction by over-pulling (cold weather). Negative values for T_Δ indicate maximum permitted load already exceeded. Positive values for T_Δ may occur even if maximum permitted load is exceeded.

Strand	Reel/Pack	P_i Design Plan Ld. (lbs.)	P_T Tot. Corr. (lbs.)	P_{i+T} Corrected Ld. (lbs.)	P_{max} Maximum Permitted Ld. (lbs.)	Maximum Perm. Ld. Exceeded?	T_Δ^{**} Maximum Permitted Temp. Change (Deg. F)	T_{min}^{**} Minimum Permitted Temperature (Deg. F)
A								
B								
C								
D								

Remarks:

Inspector:

Form LX-666

Box Tensioning 1

Revised 10/10/11

Illinois Department of Transportation

Bureau of Materials & Physical Research

PLANT INSPECTION REPORT FOR PRECAST PRESTRESSED CONCRETE UNITS

FIELD TENSIONING REPORT FOR DECK BEAMS

Beam Job No.:		Beam No.:	1		5		Date:		
Report:			2		6		Date Printed:	10/11/2011	
Beam Code No.:			3		7		Route:		
Beam Name:			4		8		Section:		
Payment Measure:		Deck Beams:					Project:		
Producer:		I Beams:					County:		
P/S #:		Piling:					Contract:		
Contractor:		Bulb Tees:					Job No.:		
Weather:		Retaining Wall:					Rd. Dist./City:		
Bed No.:		Deck Planks:							
Length:	in.	Draped Strands:							

Time: _____ hh:mm Jack No.: _____ Air temp: _____

Manufacturer: _____ No. of Strands: _____

Strands	Reel/Pack	Dia.	Mod. El.	Corrected Ld.	Corrected Net El.	Corrected Net El. - 3% Minimum	Corrected Net El. + 3% Maximum
A							
B							
C							
D							

Bottom Rows*

Reel/Pack	ROW #1 Net El.

Reel/Pack	ROW #2 Net El.

Bottom Rows*

Reel/Pack	ROW #3 Net El.

Reel/Pack	ROW #4 Net El.

Reel/Pack	ROW #5 Net El.

Reel/Pack	ROW #6 Net El.

Reel/Pack	ROW #7 Net El.

Reel/Pack	ROW #8 Net El.

Reel/Pack	ROW #9 Net El.

Top Rows**

Reel/Pack	ROW #1 Net El.

Reel/Pack	ROW #2 Net El.

*Bottom Row Numbers from Lowest to Highest In Beam

**Top Row Numbers from Highest to Lowest In Beam

LOAD CELL DATA

Load Cell No.	Cell Factor lbs./Micro ins.	Cell Reading Micro ins.

Remarks: _____

Inspector: _____

Form LX-675B

Ibeam Ten 1

Revised 10/10/11

Illinois Department of Transportation
Bureau of Materials & Physical Research
PLANT INSPECTION REPORT FOR PRECAST PRESTRESSED CONCRETE UNITS
FIELD TENSIONING REPORT FOR I- AND BULB T-BEAMS

Beam Job No.:		Beam No.:	1		5		Date:	
Report:			2		6		Date Printed:	10/11/2011
Beam Code No.:			3		7		Route:	
Beam Name:			4		8		Section:	
Payment Measure:		Deck Beams:					Project:	
Producer:		I Beams:					County:	
P/S #:		Piling:					Contract:	
Contractor:		Bulb Tees:					Job No.:	
Weather:		Retaining Wall:					Rd. Dist./City:	
Bed No.:		Deck Planks:						
Length:	in.	Draped Strands:						

Time: _____ hh:mm Jack No.: _____ Air temp: _____

Manufacturer: _____

Total No. of Strands: _____

Strands	Reel/Pack	Dia.	Mod. El.	Corrected Ld.	Corrected Net El.	Straight Strands Corrected Net El. - 3% Minimum	Straight Strands Corrected Net El. + 3% Maximum	Draped Strands Corrected Net El. - 5% Minimum	Draped Strands Corrected Net El. + 5% Maximum
A									
B									
C									
D									

Bottom Rows (Non-Draped)* No. of Straight Strands: _____ **Bottom Rows (Non-Draped)***

Reel/Pack	ROW #1 Net El.

Reel/Pack	ROW #2 Net El.

Reel/Pack	ROW #3 Net El.

Reel/Pack	ROW #4 Net El.

Reel/Pack	ROW #5 Net El.

Reel/Pack	ROW #6 Net El.

Reel/Pack	ROW #7 Net El.

Reel/Pack	ROW #8 Net El.

*Bottom Row Numbers from Lowest to Highest In Beam

Top Rows (Draped)** No. of Draped Strands: _____ **Top Rows (Draped)****

Reel/Pack	ROW #1T Net El.

Reel/Pack	ROW #2T Net El.

Reel/Pack	ROW #3T Net El.

Reel/Pack	ROW #4T Net El.

Reel/Pack	ROW #5T Net El.

Reel/Pack	ROW #6T Net El.

Reel/Pack	ROW #7T Net El.

Reel/Pack	ROW #8T Net El.

Length Ratio Draped / Straight

**Top Row Numbers from Highest to Lowest In Beam

LOAD CELL DATA

Load Cell No.	Cell Factor lbs./Micro ins.	Cell Reading Micro ins.

Remarks: _____

Inspector: _____

Form LX-6751

Anchorage Movement

Revised 10/10/11

Illinois Department of Transportation

Bureau of Materials & Physical Research

PLANT INSPECTION REPORT FOR PRECAST PRESTRESSED CONCRETE UNITS

CORRECTION FOR ANCHORAGE MOVEMENT EFFECTS ON STRAND ELONGATIONS AND LOADS

Beam Job No.:		Beam No.:	1		5		Date:	
Report:			2		6		Date Printed:	
Beam Code No.:			3		7		Route:	
Beam Name:			4		8		Section:	
Payment Measure:		Deck Beams:					Project:	
Producer:		I Beams:					County:	
P/S #:		Piling:					Contract:	
Contractor:		Bulb Tees:					Job No.:	
Weather:		Retaining Wall:					Rd. Dist./City:	
Bed No.:		Deck Planks:						
Length:	**in.**	Draped Strands:						

Definition of Variables

e_{am} = Total elongation correction for anchorage movement per strand

e_{ps} = Loss per strand due to anchorage movement

N_s = Total number of strands

M_T = Total anchorage movement

P_{am} = Force correction for anchorage movement per strand

A_s = Cross sectional area of strand

E_s = Modulus of elasticity of strand

L = Bed length (strand length between anchors)

Anchorage Movement Data and Calculations

Loss Per Strand $e_{ps} = M_T / N_s$ in.

Force Correction per Strand $P_{am} = E_s\, e_{am}\, A_s / L$ lbs.

Total Elongation Correction per Strand $e_{am} = M_T / 2 + e_{ps}$ in.

N_s = _____

L = _____ in.

M_T = _____ in.

Strands	Reel/Pack	A_s Area (sq. in.)	E_s Mod. El. (psi)	e_{am} Tot. Elong. Correction Per Strand (in.)	P_{am} Force Correction Per Strand (lbs.)
A					
B					
C					
D					

Remarks:

Inspector:

Self-Stressing Beds

Revised 10/10/11

Illinois Department of Transportation

Bureau of Materials & Physical Research

PLANT INSPECTION REPORT FOR PRECAST PRESTRESSED CONCRETE UNITS

CORRECTION FOR SELF-STRESSING BED EFFECTS ON STRAND ELONGATIONS AND LOADS

Beam Job No.:		Beam No.:	1		5		Date:	
Report:			2		6		Date Printed:	10/11/2011
Beam Code No.:			3		7		Route:	
Beam Name:			4		8		Section:	
Payment Measure:		Deck Beams:					Project:	
Producer:		I Beams:					County:	
P/S #:		Piling:					Contract:	
Contractor:		Bulb Tees:					Job No.:	
Weather:		Retaining Wall:					Rd. Dist./City:	
Bed No.:		Deck Planks:						
Length:	**in.**	Draped Strands:						

Definition of Variables

e_{sb} = Total elongation correction for self-stressing bed per strand

e_{ss} = Loss per strand due bed shortening (self-stressing bed)

N_s = Total number of strands

S_B = Total bed shortening

P_{sb} = Force correction for self-stressing beds per strand

A_s = Cross sectional area of strand

E_s = Modulus of elasticity of strand

L = Bed length (strand length between anchors)

Self-Stressing Bed Data and Calculations

Loss Per Strand $e_{ss} = S_B / N_s$ in.

Total Elongation Correction per Strand $e_{sb} = S_B / 2 + e_{ss}$ in.

Force Correction per Strand $P_{sb} = E_s\, e_{sb}\, A_s / L$ lbs.

N_s = _____

L = _____ in.

S_B = _____ in.

Strands	Reel/Pack	A_s Area (sq. in.)	E_s Mod. El. (psi)	e_{sb} Tot. Elong. Correction Per Strand (in.)	P_{sb} Force Correction Per Strand (lbs.)
A					
B					
C					
D					

Remarks:

Inspector:

Thermal

Revised 10/10/11

Illinois Department of Transportation

Bureau of Materials & Physical Research

PLANT INSPECTION REPORT FOR PRECAST PRESTRESSED CONCRETE UNITS

CORRECTION FOR THERMAL EFFECTS ON STRAND ELONGATIONS AND LOADS

Beam Job No.:		Beam No.:	1		5		Date:	
Report:			2		6		Date Printed:	10/11/2011
Beam Code No.:			3		7		Route:	
Beam Name:			4		8		Section:	
Payment Measure:		Deck Beams:					Project:	
Producer:		I Beams:					County:	
P/S #:		Piling:					Contract:	
Contractor:		Bulb Tees:					Job No.:	
Weather:		Retaining Wall:					Rd. Dist./City:	
Bed No.:		Deck Planks:						
Length:	in.	Draped Strands:						

Definition of Variables

e_t = Elongation correction due to temperature per strand

a = Coefficient of expansion for steel

T_1 = Air (Strand) temperature at time of tensioning

T_2 = Estimated temperature of concrete at placement

T = Change in temperature (T_2-T_1)

P_t = Force correction for thermal per strand

P_i = Design plan load

A_s = Cross sectional area of strand

E_s = Modulus of elasticity of strand

L = Bed length (strand length between anchors)

Thermal Data and Calculations

Loss per Strand $e_t = a \times L \times T$ in.

Force Correction Per Strand $P_t = E_s\, e_t\, A_s / L$ lbs.

Thermal Correction* Always?	

a = 0.0000065 in. per in. of strand per Degree F

T_1 = Degree F

L = in.

T_2 = Degree F

T = $T_2 - T_1$ = Degree F

P_i = lbs.

*If "No" is chosen for Always? for thermal correction and self-stressing bed option, a correction will be made for $\Delta T > 25°$ F or 14° C for cold weather.
Thermal corrections for hot weather are discouraged and should be manually input by the user in the thermal sheet. The "Thermal Correction Always" option assumes air temperature lower than concrete temperature.

Strands	Reel/Pack	A_s Area (sq. in.)	E_s Mod. El. (psi)	e_t Elongation Correction Per Strand (in.)	P_t Force Correction Per Strand (lbs.)	% Correction (P_t / P_i)	% Correction OK?
A							
B							
C							
D							

If the correction to be applied exceeds 5% of the Design Plan Load (P_i), the tensioning operation shall be deferred until a more favorable ambient temperature prevails

Remarks:

Inspector:

Form LX-669

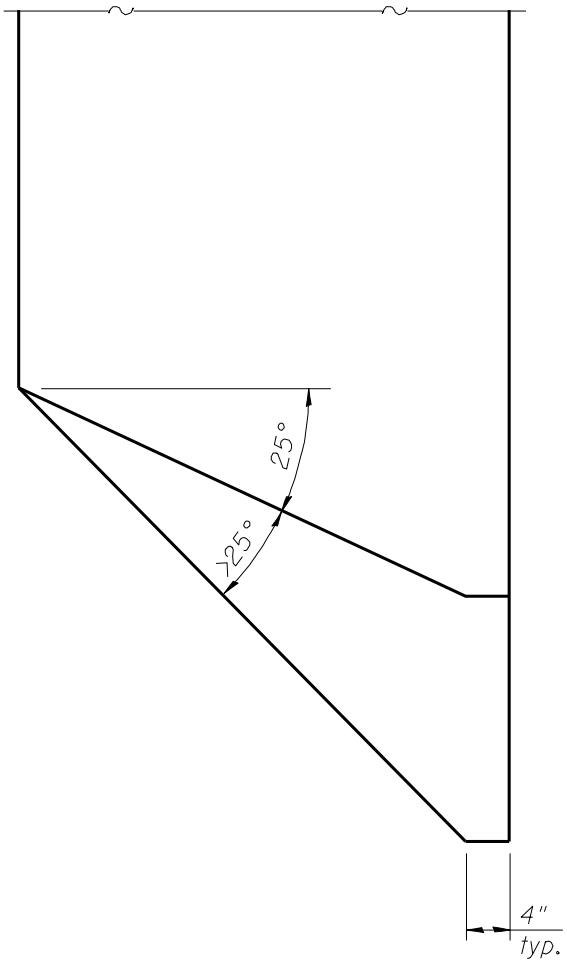

PLAN VIEW SHOWING END
OF TYPICAL DECK BEAM

POINT BLOCK DETAIL

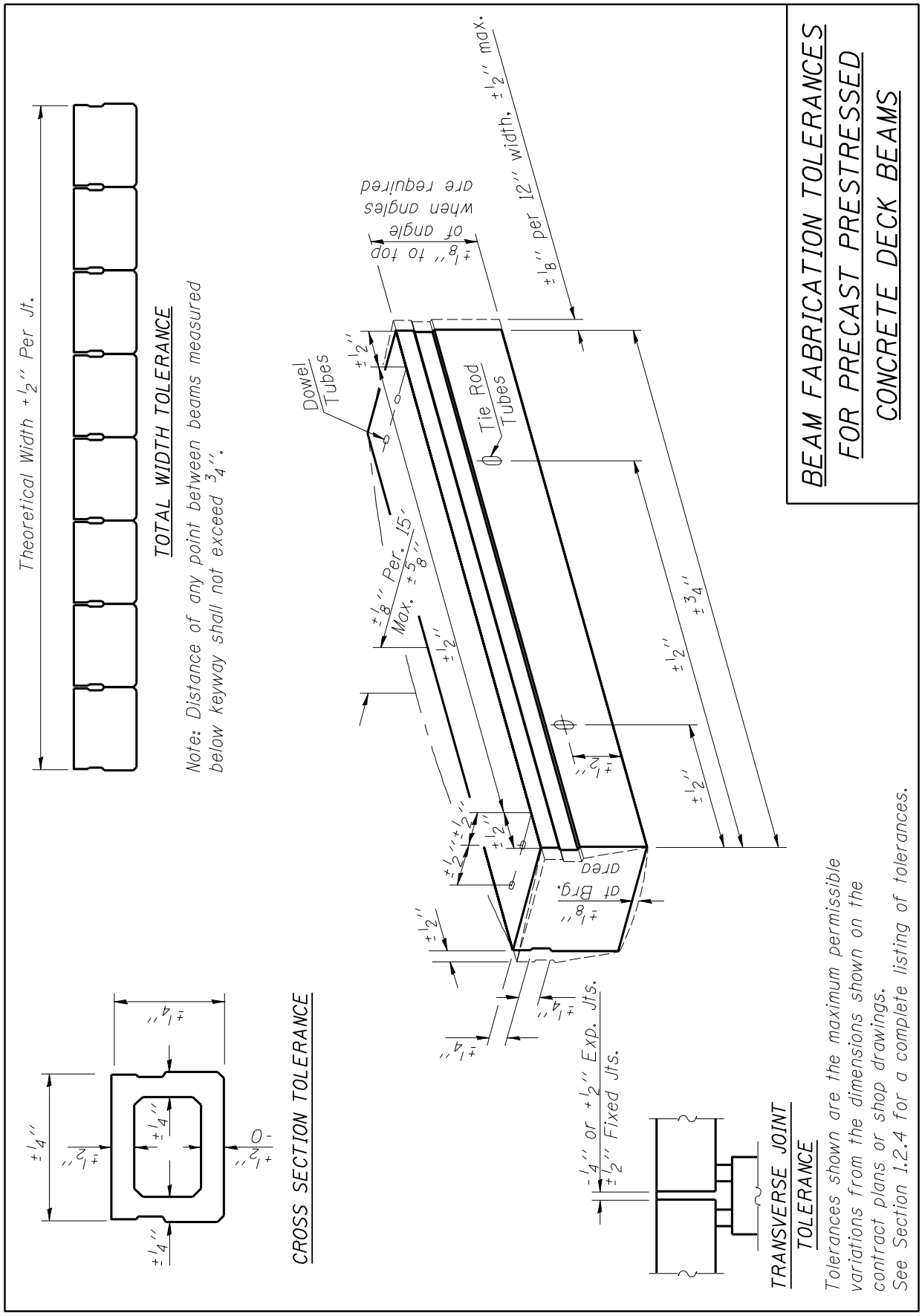
BEAM FABRICATION TOLERANCES
FOR PRECAST PRESTRESSED
CONCRETE DECK BEAMS
Theoretical Width ±1/2'' Per Jt.
TOTAL WIDTH TOLERANCE
Note: Distance of any point between beams measured below keyway shall not exceed 3/4''.
±1/8'' per 12'' width. ±1/2'' max.
±1/8'' to top of angle when angles are required
Dowel Tubes
Tie Rod Tubes
±1/8'' Per. 15' Max. ±5/8''
±1/2''
±3/4''
±1/8'' at Brg. Grad
±1/4''
±1/4'' or ±1/2'' Exp. Jts.
±1/2'' Fixed Jts.
CROSS SECTION TOLERANCE
TRANSVERSE JOINT TOLERANCE
Tolerances shown are the maximum permissible variations from the dimensions shown on the contract plans or shop drawings.
See Section 1.2.4 for a complete listing of tolerances.

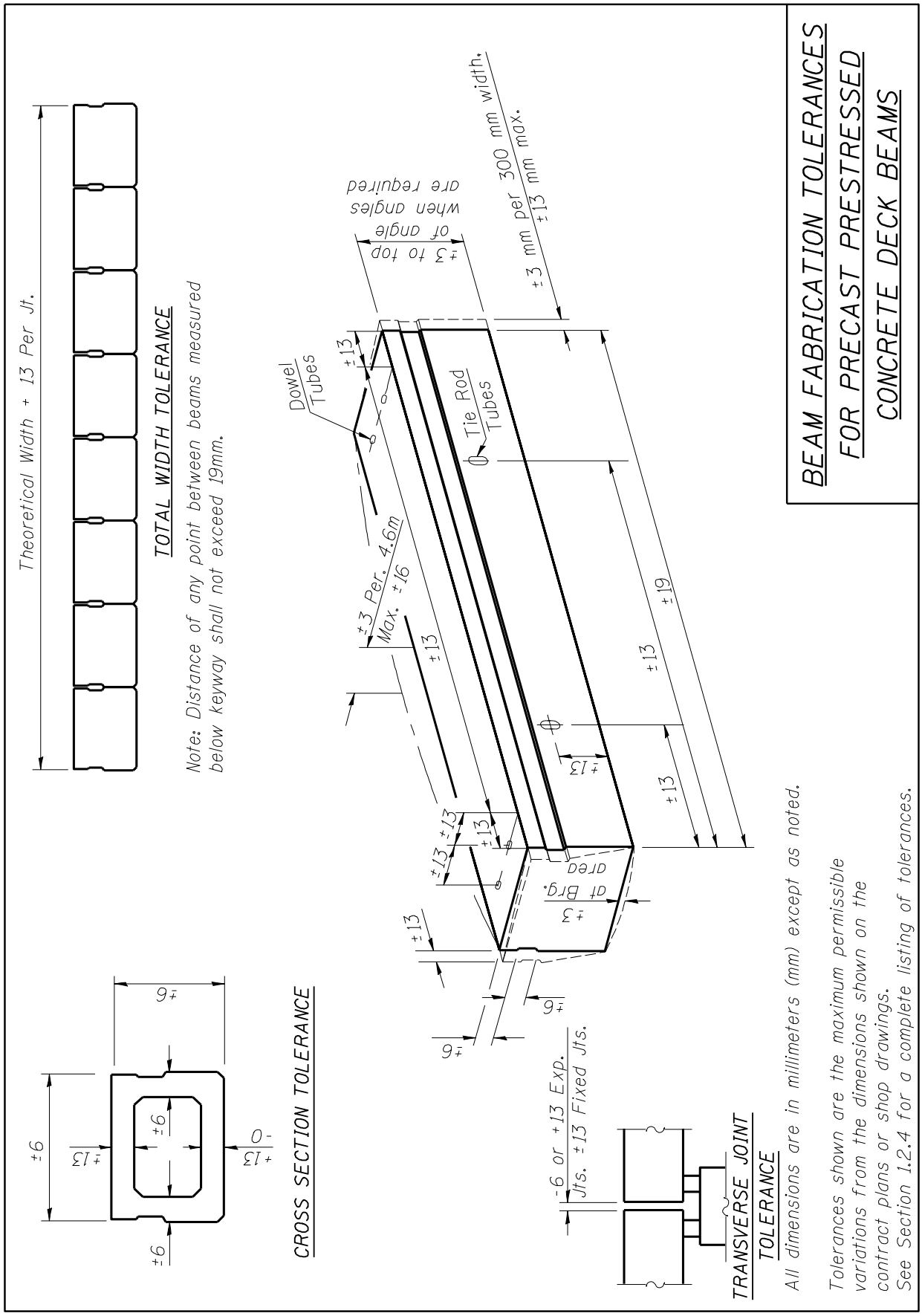
BEAM FABRICATION TOLERANCES
FOR PRECAST PRESTRESSED
CONCRETE DECK BEAMS
Theoretical Width + 13 Per Jt.
TOTAL WIDTH TOLERANCE
Note: Distance of any point between beams measured below keyway shall not exceed 19mm.
±3 mm per 300 mm width.
±13 mm max.
±3 to top of angle when angles are required
Dowel Tubes
Tie Rod Tubes
±3 Per. 4.6m
Max. ±16
±13
±19
±3 at Brg. Qred
±6
CROSS SECTION TOLERANCE
-6 or +13 Exp.
Jts. ±13 Fixed Jts.
TRANSVERSE JOINT
TOLERANCE
All dimensions are in millimeters (mm) except as noted.
Tolerances shown are the maximum permissible variations from the dimensions shown on the contract plans or shop drawings.
See Section 1.2.4 for a complete listing of tolerances.

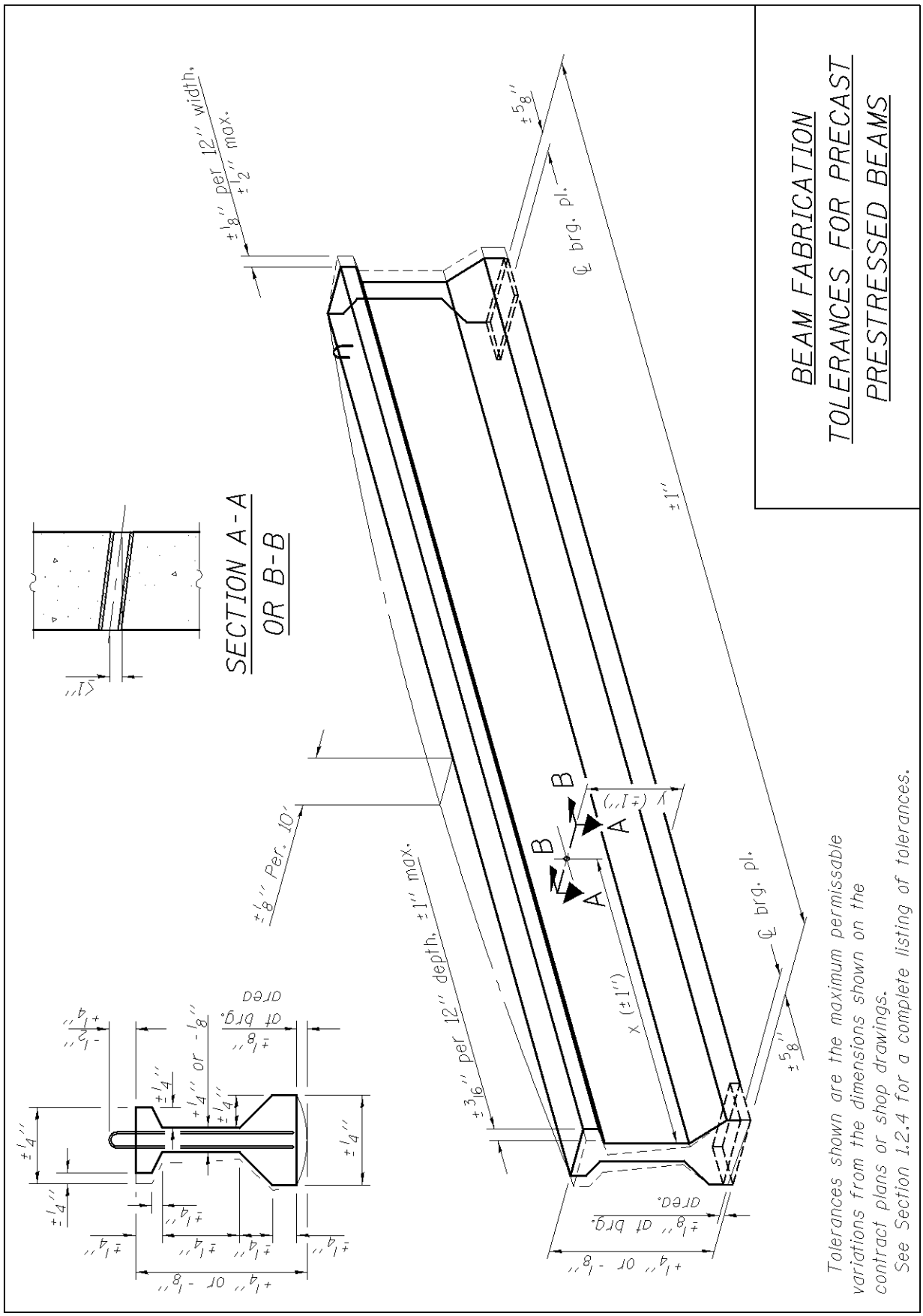
BEAM FABRICATION
TOLERANCES FOR PRECAST
PRESTRESSED BEAMS
SECTION A-A
OR B-B
±1/8'' per 12'' width, ±1/2'' max.
±5/8''
℄ brg. pl.
±1''
±1/8'' Per. 10'
±3/16'' per 12'' depth, ±1'' max.
x (±1'')
(±1'')
A
B
±1/4''
±1/4'' or -1/8''
±1/8'' at brg. area
+1/4'' or -1/8''
Tolerances shown are the maximum permissable variations from the dimensions shown on the contract plans or shop drawings.
See Section 1.2.4 for a complete listing of tolerances.

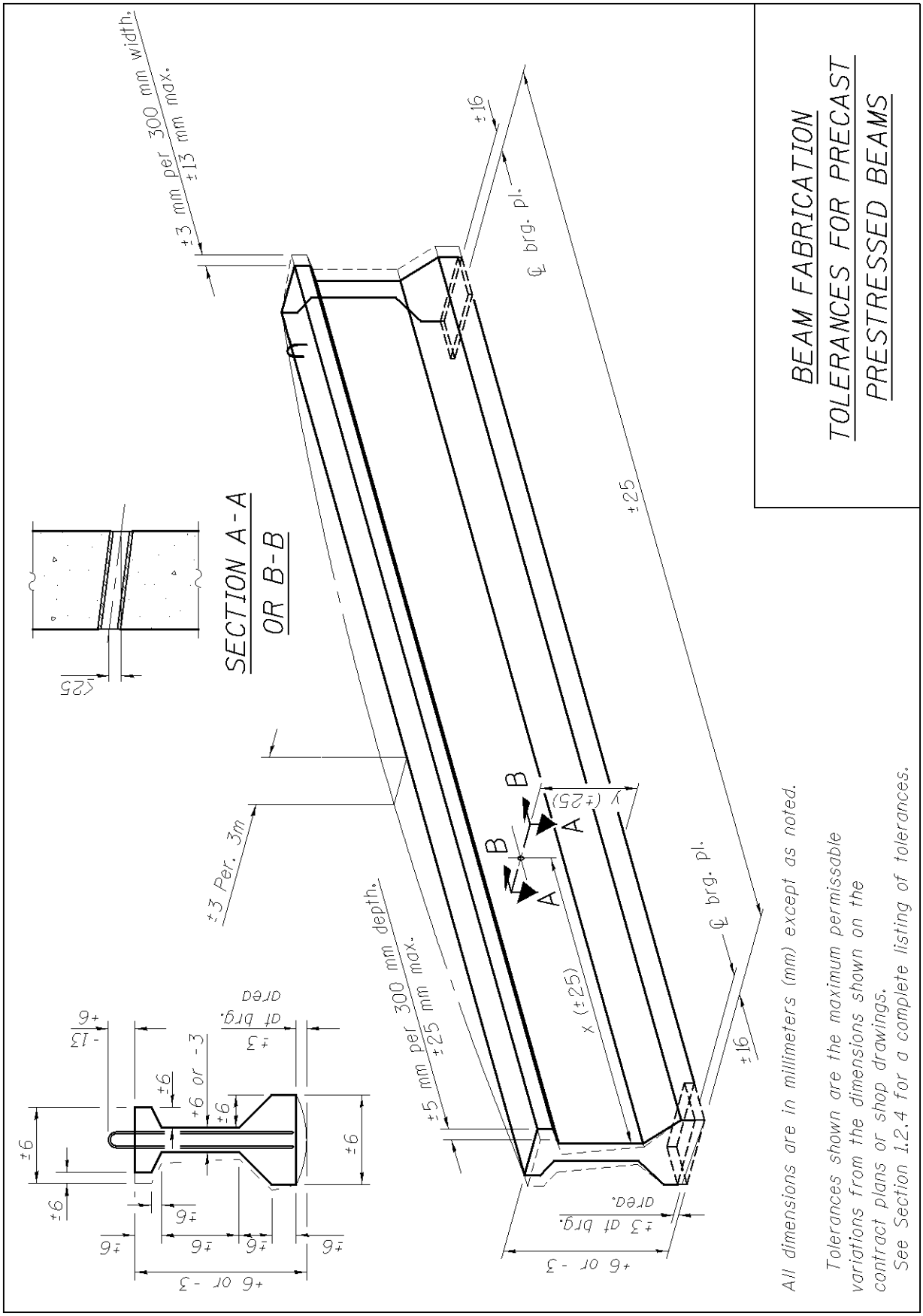

All dimensions are in millimeters (mm) except as noted.

Tolerances shown are the maximum permissable variations from the dimensions shown on the contract plans or shop drawings.
See Section 1.2.4 for a complete listing of tolerances.

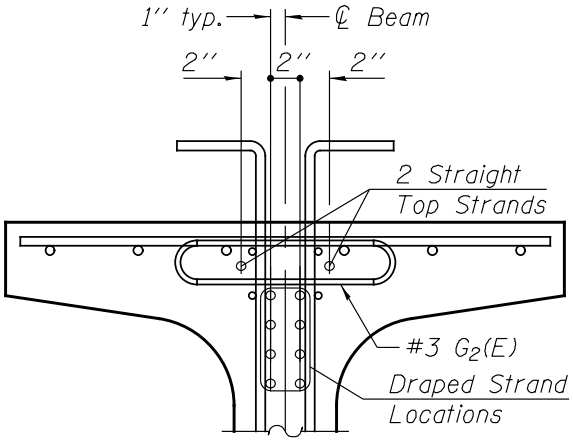

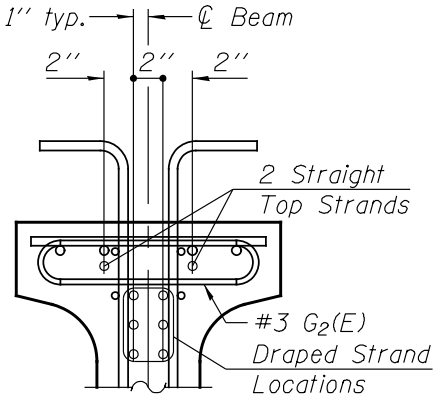

IL27 BEAM SECTION

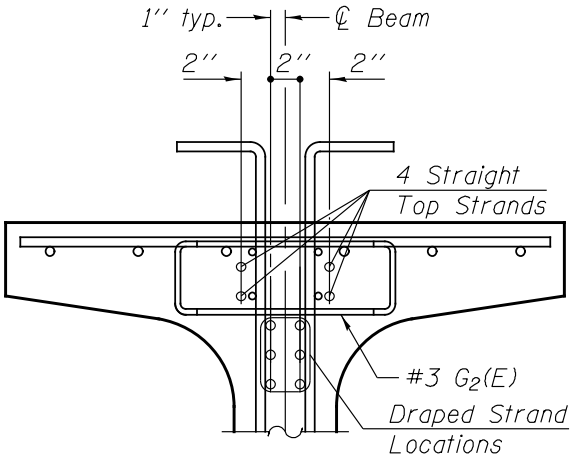

IL36 THRU 72 BEAM SECTION

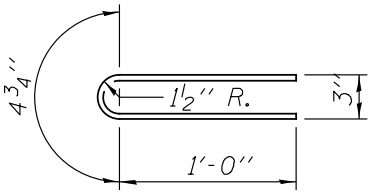

w/ 2 Straight Strands

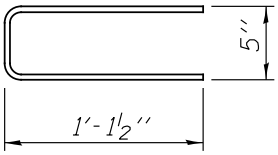

w/ 4 Straight Strands

#3 G2(E) BAR

Standard strand patterns for the IL beam shapes have either 2 or 4 fully stressed straight top strands. These strands are directly above the draped strands and may cause fabrication issues with the strand placement devices outside of the beam. To alleviate this problem the fabricator may move the top straight strands horizontally outward 2 inches as shown in the beam cross sections and provide confinement reinforcement; pairs of #3 G2(E) bars at 6 inch centers for a distance of 2x (Beam depth) from each end of the beam.

ALTERNATE STRAIGHT TOP STRAND PLACEMENT FOR IL BEAMS WITH REQUIRED CONFINEMENT G2(E) BARS

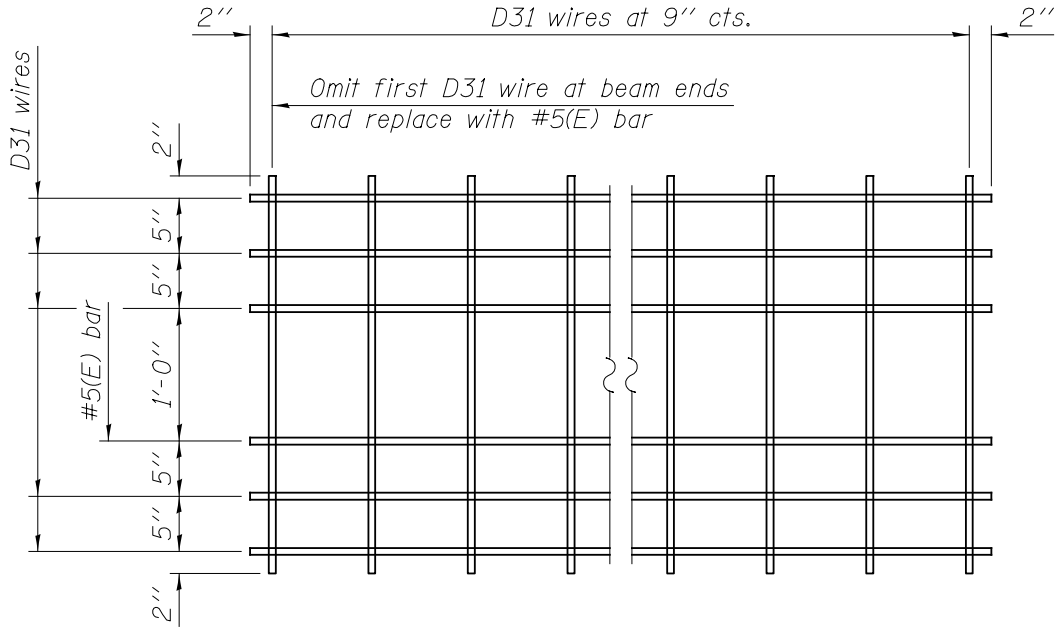

38 INCH FLANGE WIDTH

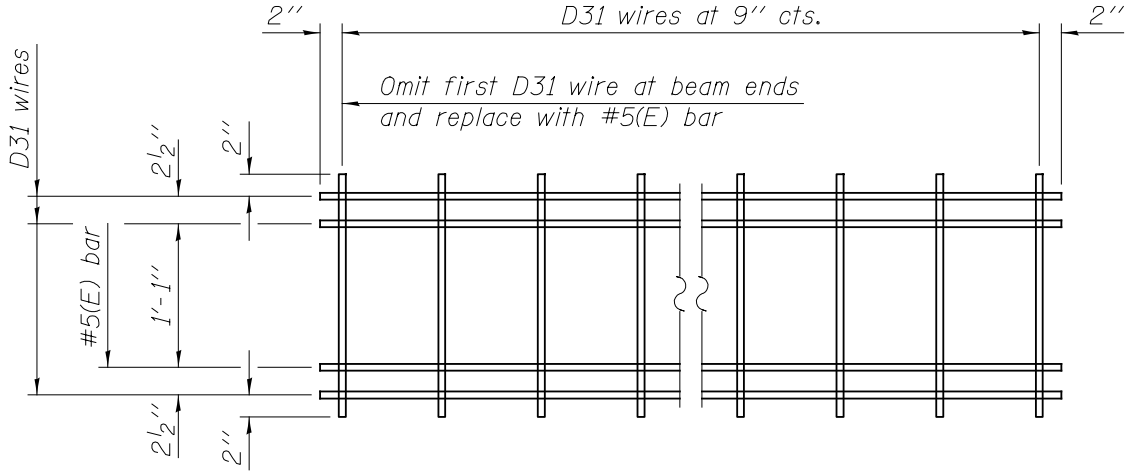

24 INCH FLANGE WIDTH

ALTERNATE M1 WWR DETAIL

The #5(E) bars shown shall be tied in place and have a minimum lap of 2'-2''. Multiple sheets of M1 WWR shall be spliced together as specified on the bridge plans.

ALTERNATE TOP FLANGE REINFORCEMENT FOR IL36-IL72 BEAMS

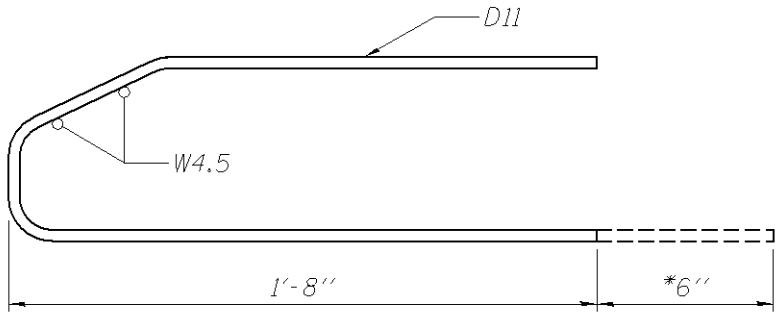

IL27 BEAM
(M_2 and M_3 WWR)

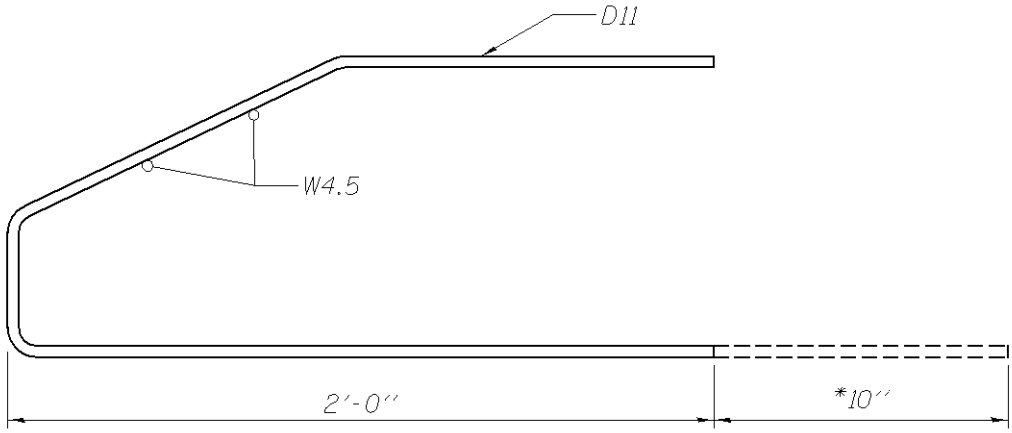

IL36 THRU 72 BEAMS
(M_2 thru M_4 WWR)

*Permissable WWR extension to assist with tying.

ALTERNATE BOTTOM FLANGE WWR FOR IL BEAMS

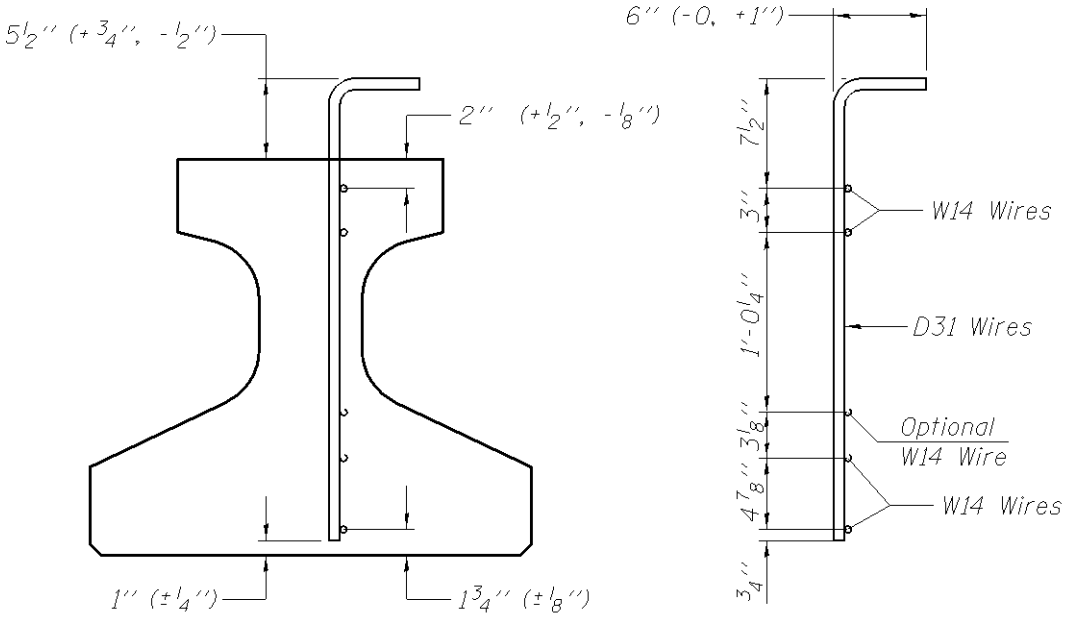

BEAM SECTION

WEB WWR

The contract plan dimensions detailed for M4 thru M6 WWR are by design. Variations in placement of the WWR may be made based on the tolerances shown in the Beam Section. If necessary, the fabricator may utilize auxiliary reinforcement to assist in holding the flange reinforcement in position or optional W14 wires may be added to the initial fabrication of the WWR as detailed. Caution should be noted that even slight misplacements of wire in fabrication may result in compounded errors and not serve well for the intended purpose. Removing wires from fabricated WWR and re-attaching them will not be permitted.

WWR PLACEMENT TOLERANCES AND OPTIONAL WIRE LOCATIONS FOR IL27 BEAMS

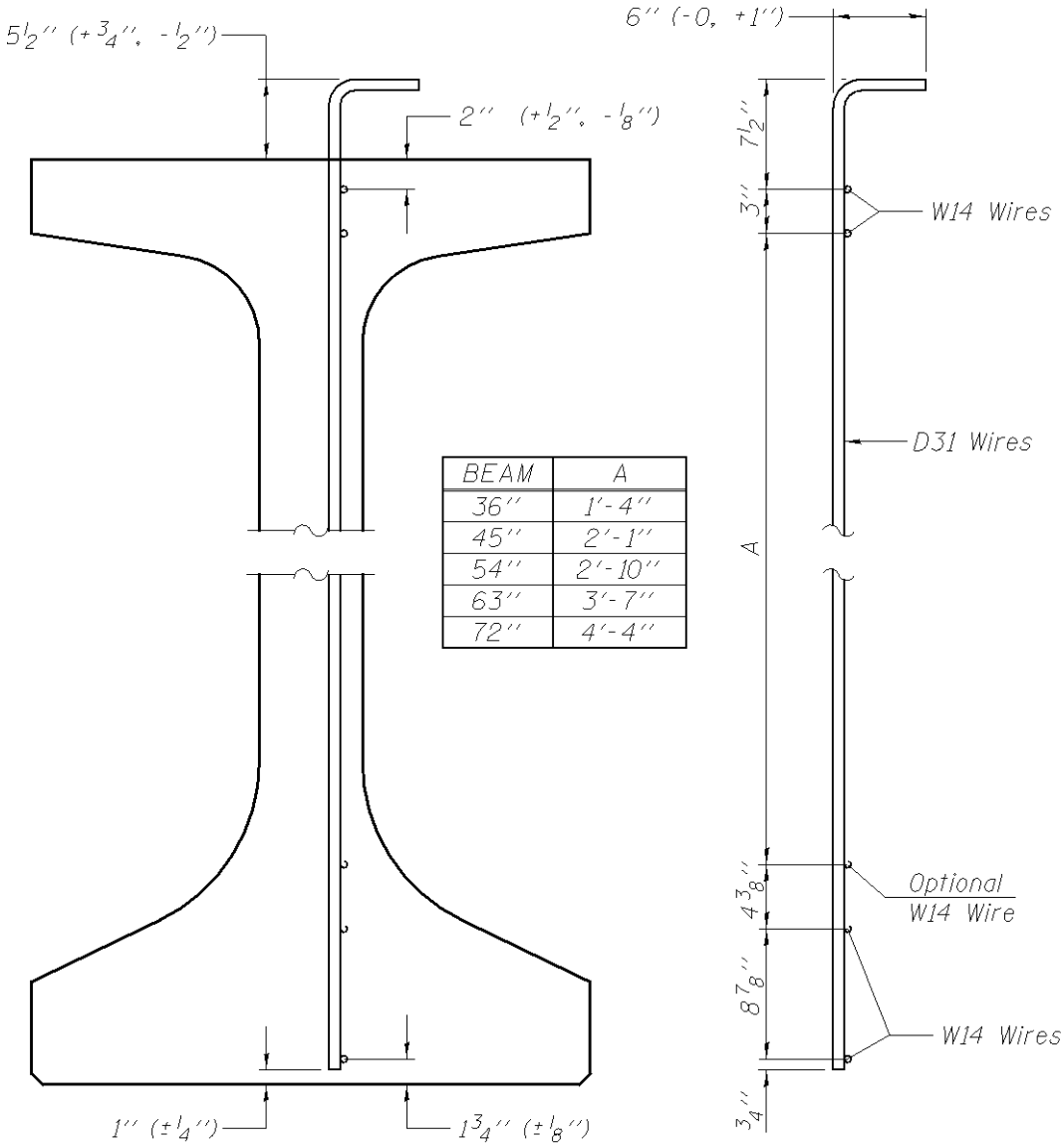

BEAM	A
36''	1'-4''
45''	2'-1''
54''	2'-10''
63''	3'-7''
72''	4'-4''

BEAM SECTION

WEB WWR

The contract plan dimensions detailed for M5 thru M8 WWR are by design. Variations in placement of the WWR may be made based on the tolerances shown in the Beam Section. If necessary, the fabricator may utilize auxiliary reinforcement to assist in holding the flange reinforcement in position or optional W14 wires may be added to the initial fabrication of the WWR as detailed. Caution should be noted that even slight misplacements of wire in fabrication may result in compounded errors and not serve well for the intended purpose. Removing wires from fabricated WWR and re-attaching them will not be permitted.

WWR PLACEMENT TOLERANCES AND OPTIONAL WIRE LOCATIONS FOR IL36 THRU 72 BEAMS

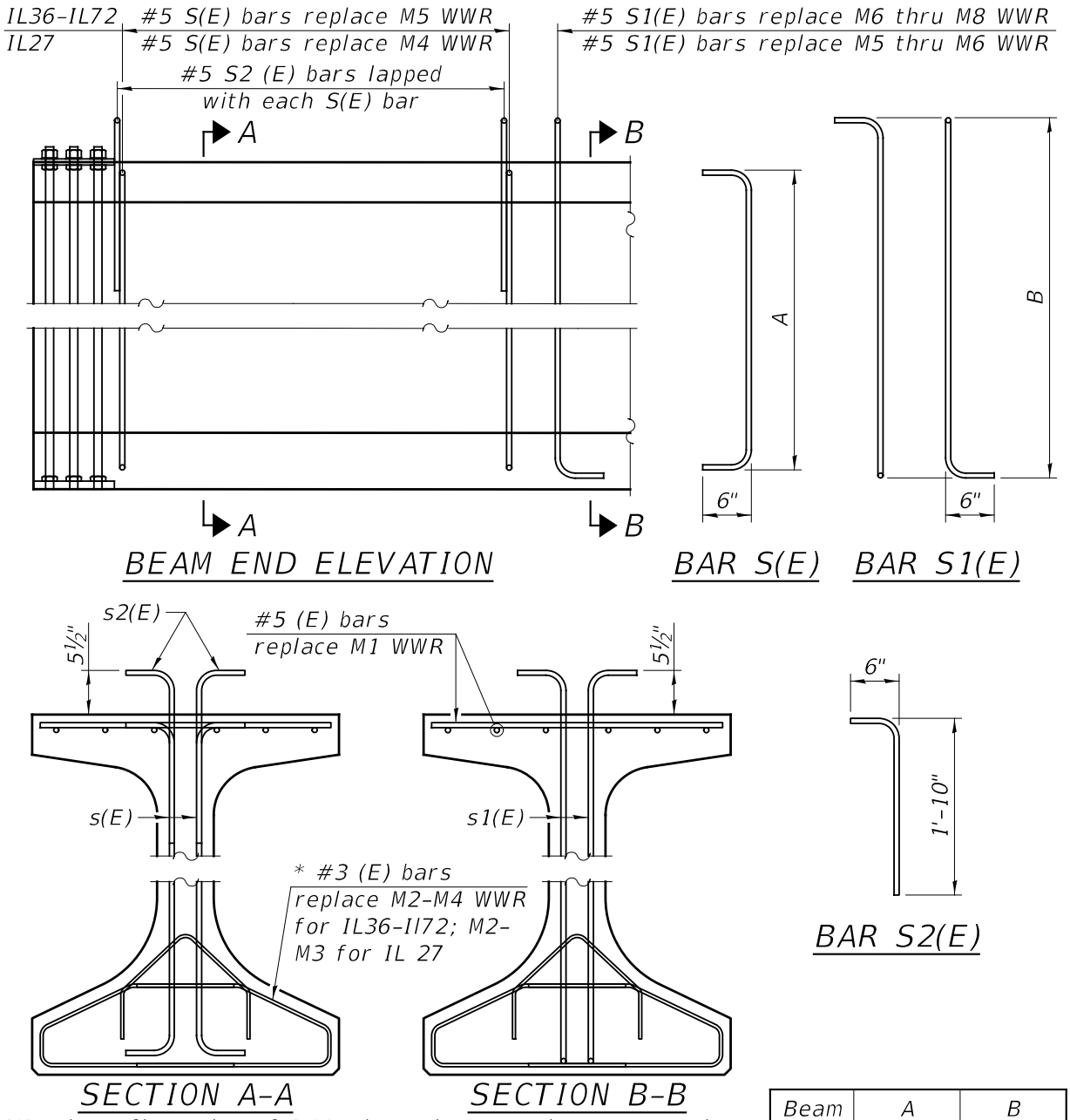

*Match configuration of D11 wires shown on the contract plans.

Beam	A	B
IL27	1'-11⅝"	2'-7⅛"
IL36	2'-8⅝"	3'-4⅛"
IL45	3'-5⅝"	4'-1⅛"
IL54	4'-2⅝"	4'-10⅛"
IL63	4'-11⅝"	5'-7⅛"
IL72	5'-8⅝"	6'-4⅛"

Notes:

S(E), S1(E) and S2(E) reinforcement shall be either D31 wire according to A1064 grade 70 or reinforcement bar according to A706 Grade 80 or a combination thereof. Contract plans which specify Grade 60 for WWR may additionally use A706 Grade 60 for reinforcement substitution and/or a combination thereof. All other reinforcement shall be A706 Grade 60.

Rebar substitutions shall match the spacings of the WWR shown on the contract plans.

Note the W14 wires and the W4.5 wires of the WWR may be eliminated with this alternate reinforcement scheme.

38 inch wide top flange shown, narrow top flange similar.

ALTERNATE REBAR SUBSTITUTION FOR WWR IN IL27-IL72 BEAMS

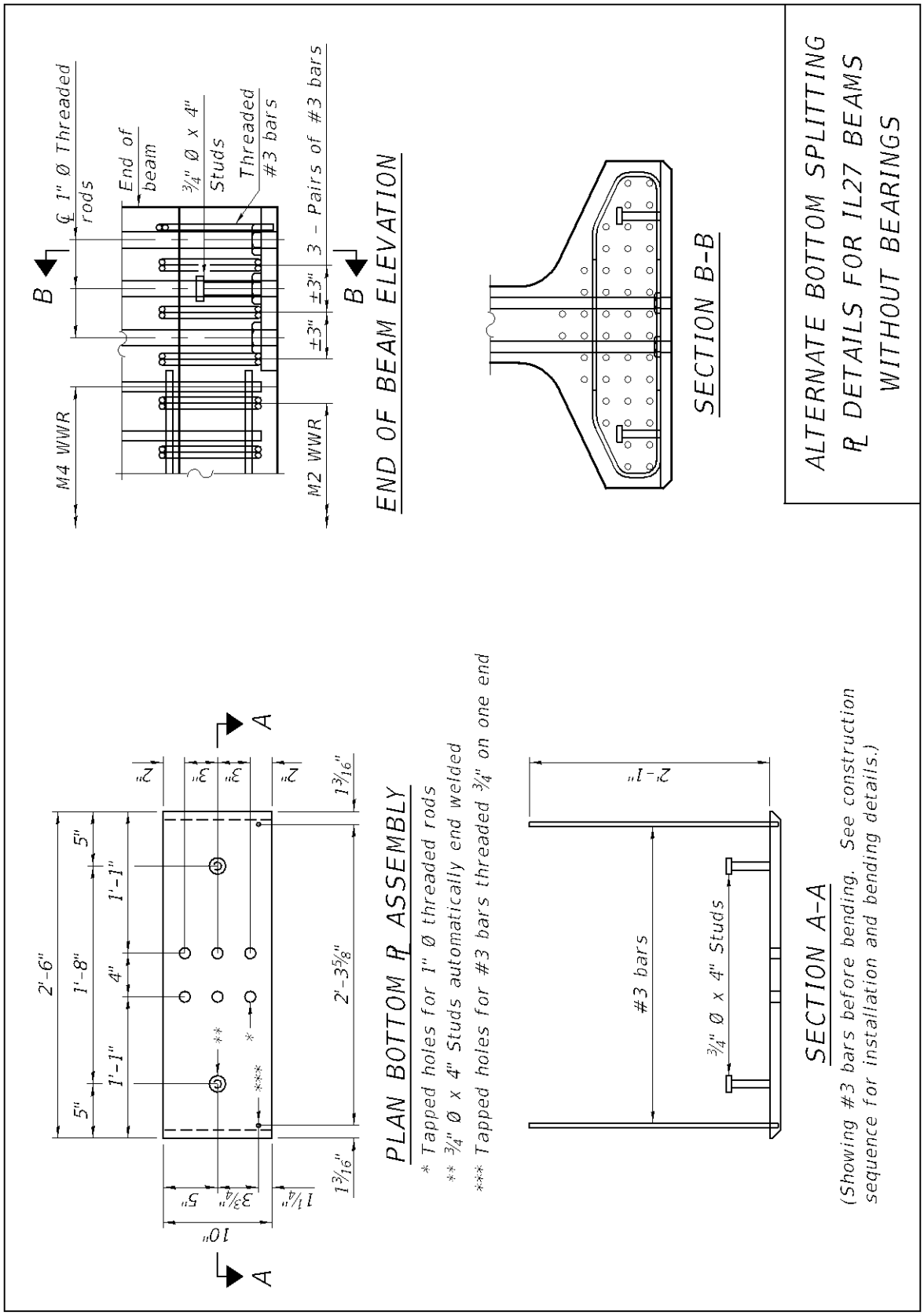

3-PAGE DETAIL FOR IL27 BEAMS (PAGE 1 OF 3)

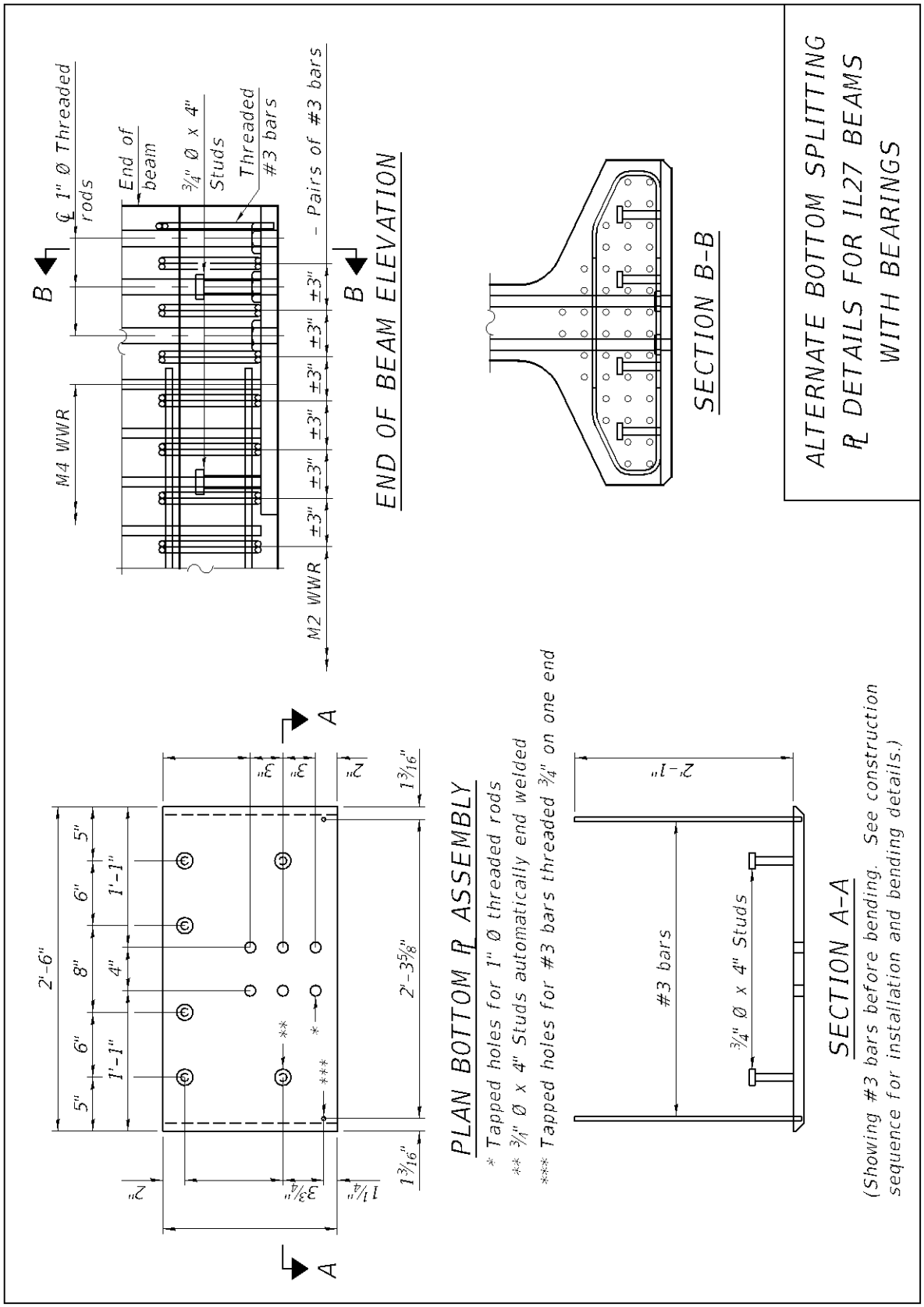

3-PAGE DETAIL FOR IL27 BEAMS (PAGE 2 OF 3)

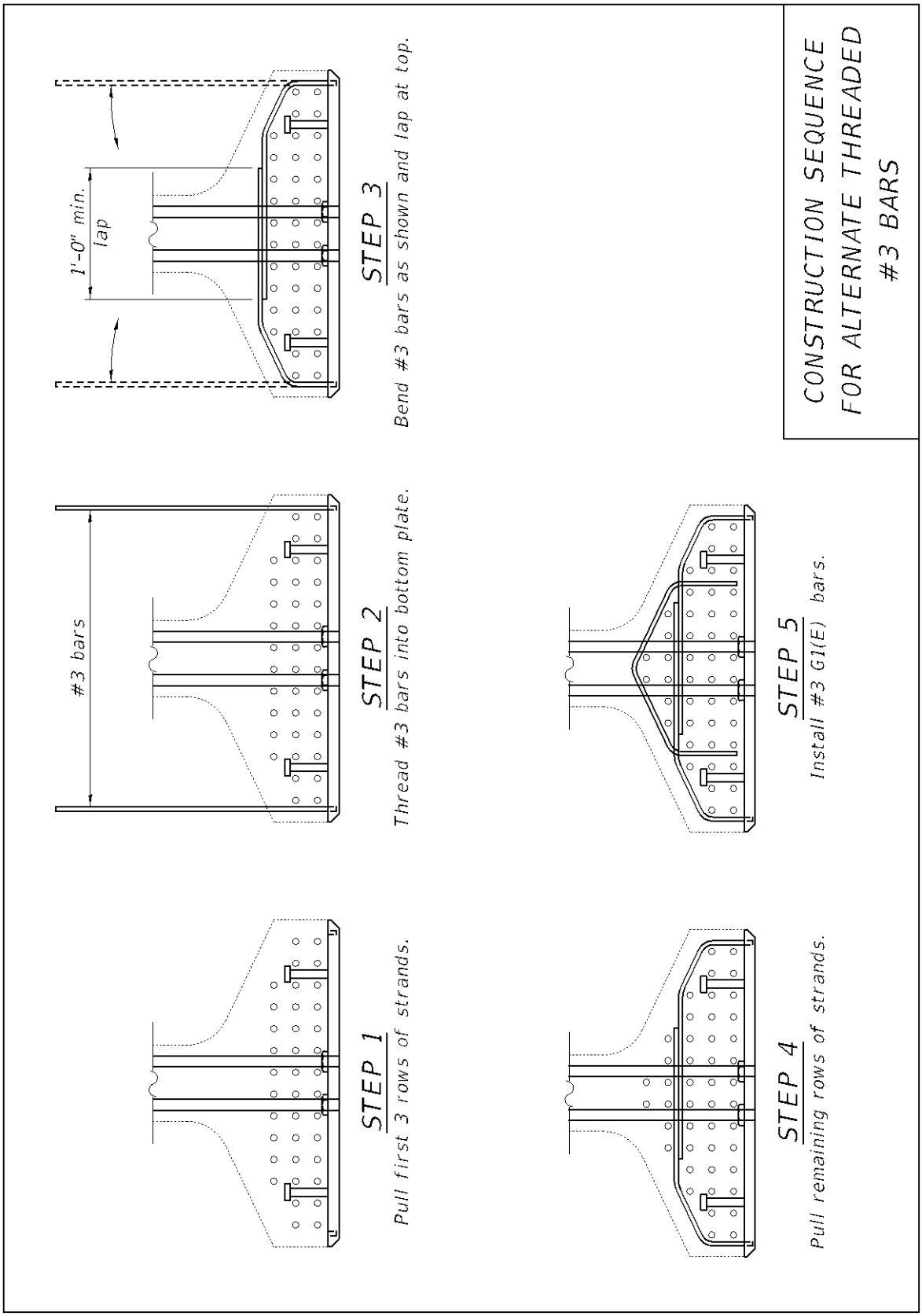

3-PAGE DETAIL FOR IL27 BEAMS (PAGE 3 OF 3)

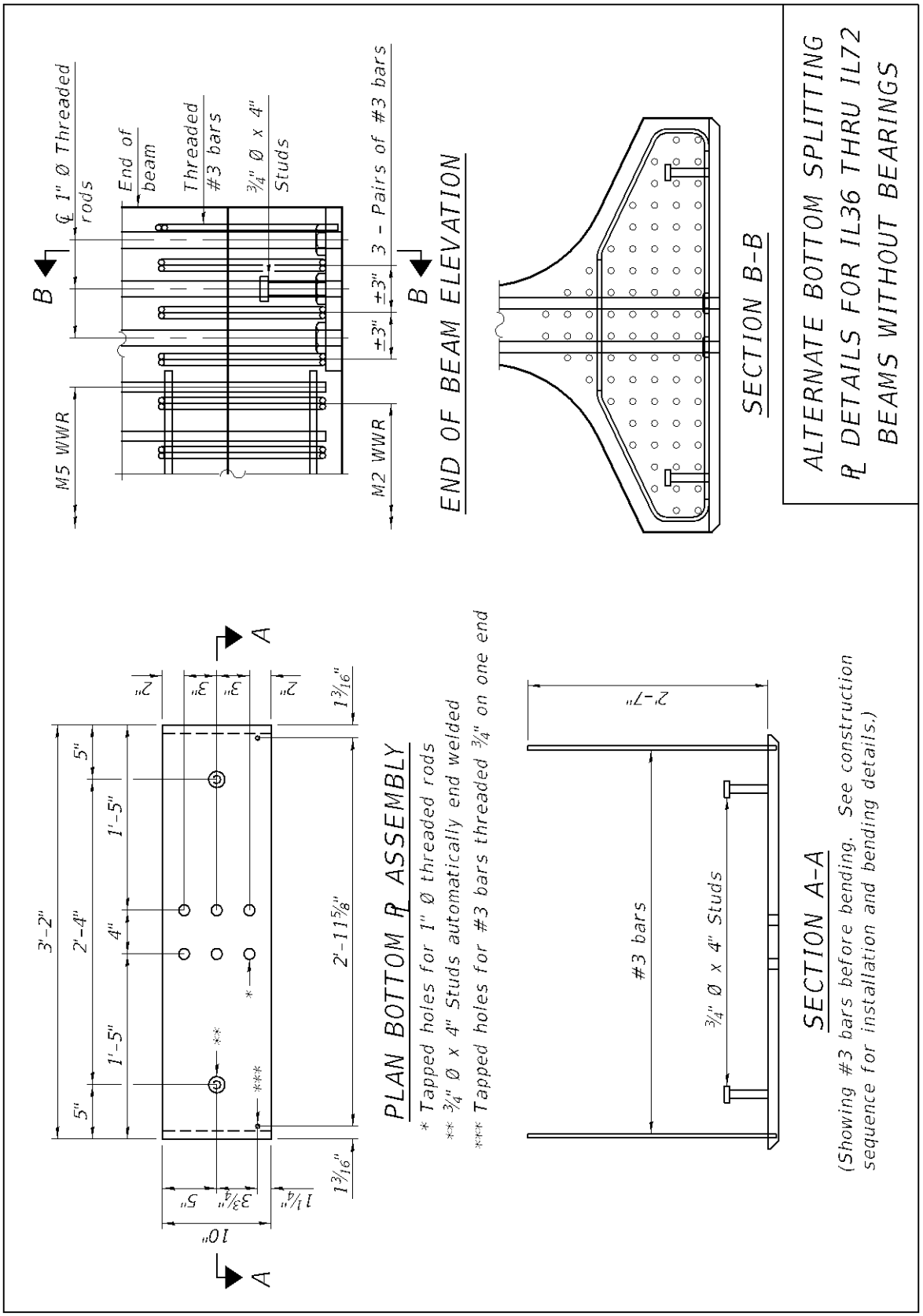

3-PAGE DETAIL FOR IL36 – IL72 BEAMS (PAGE 1 OF 3)

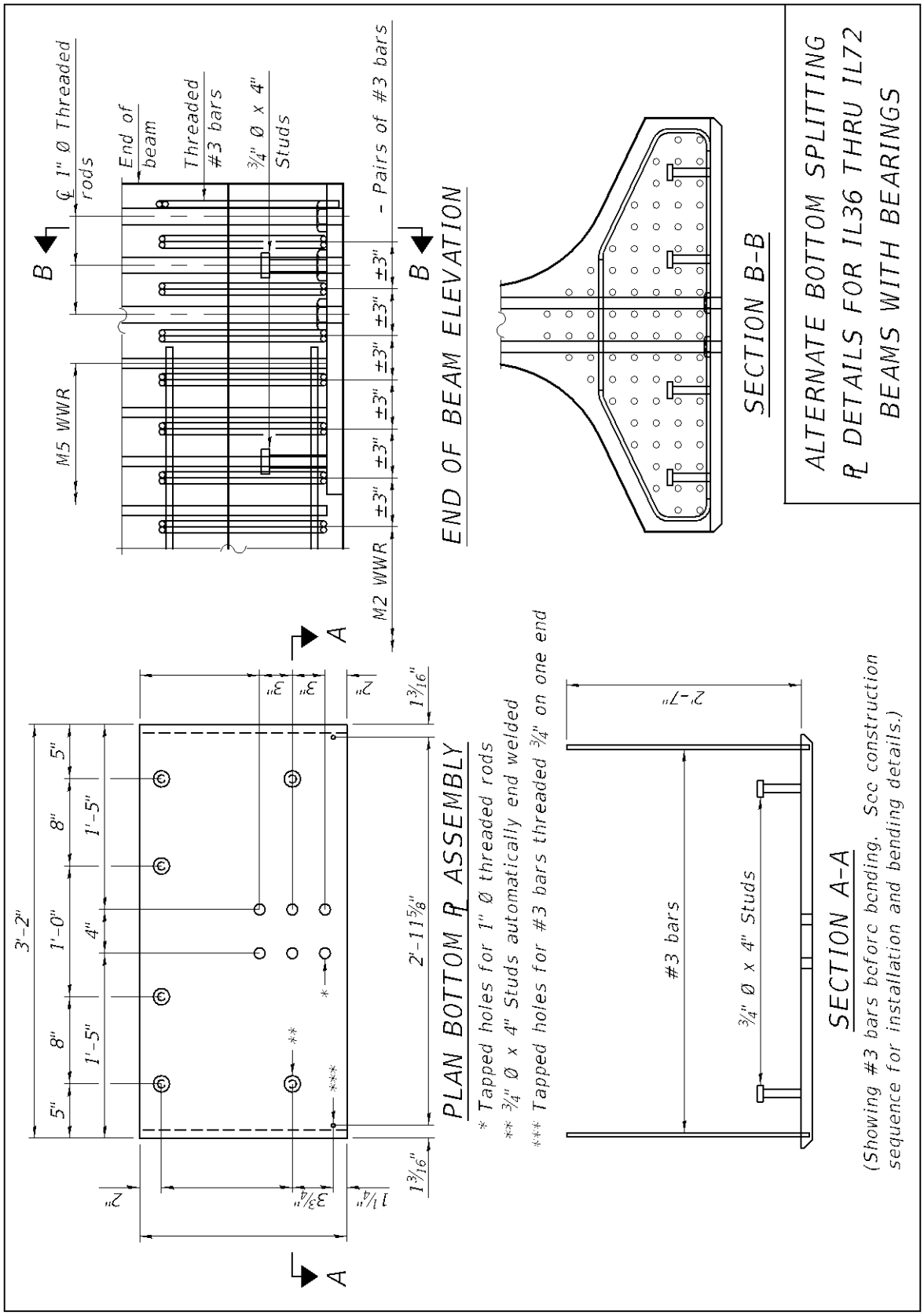

3-PAGE DETAIL FOR IL36 – IL72 BEAMS (PAGE 2 OF 3)

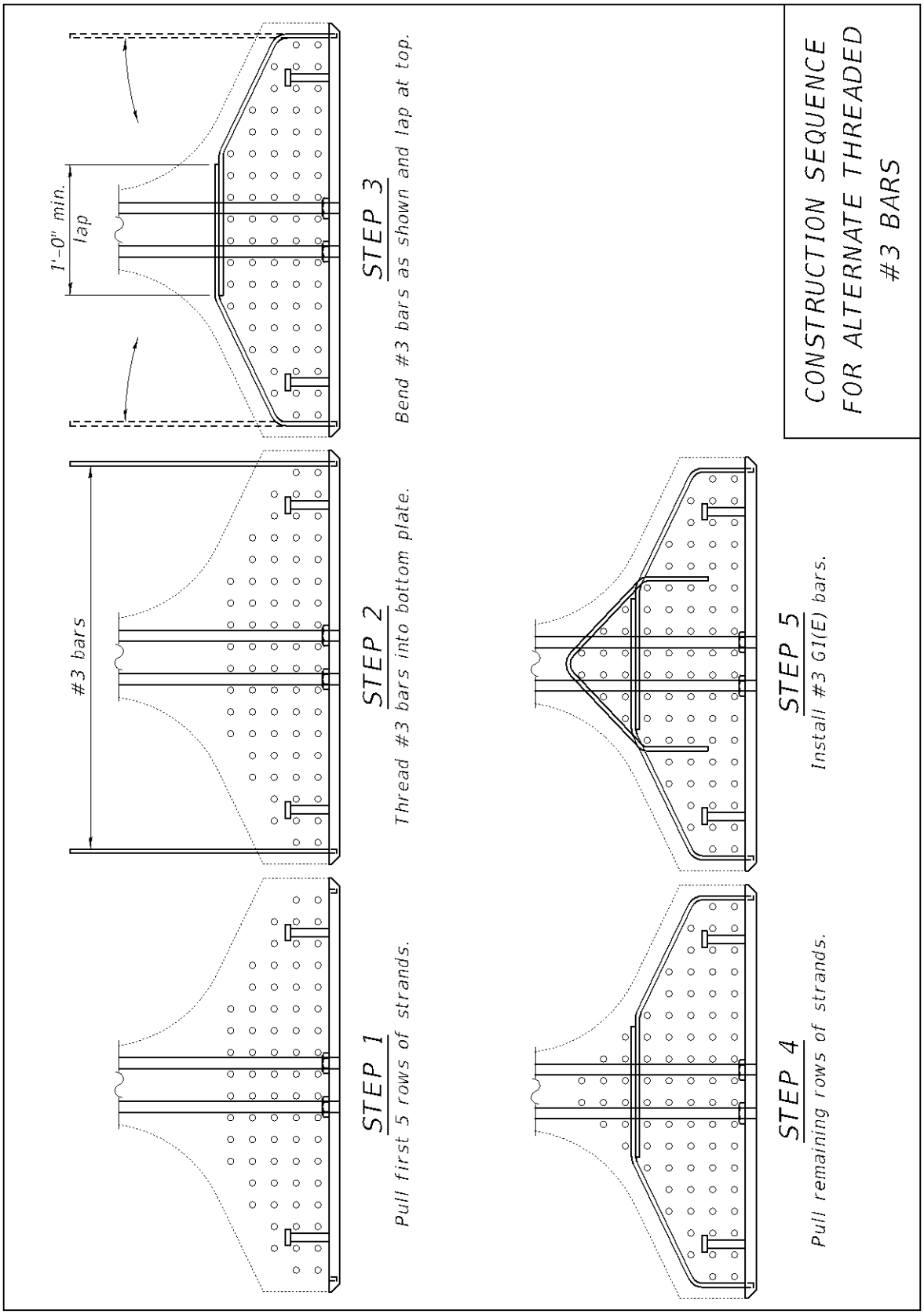

3-PAGE DETAIL FOR IL36 – IL72 BEAMS (PAGE 3 OF 3)

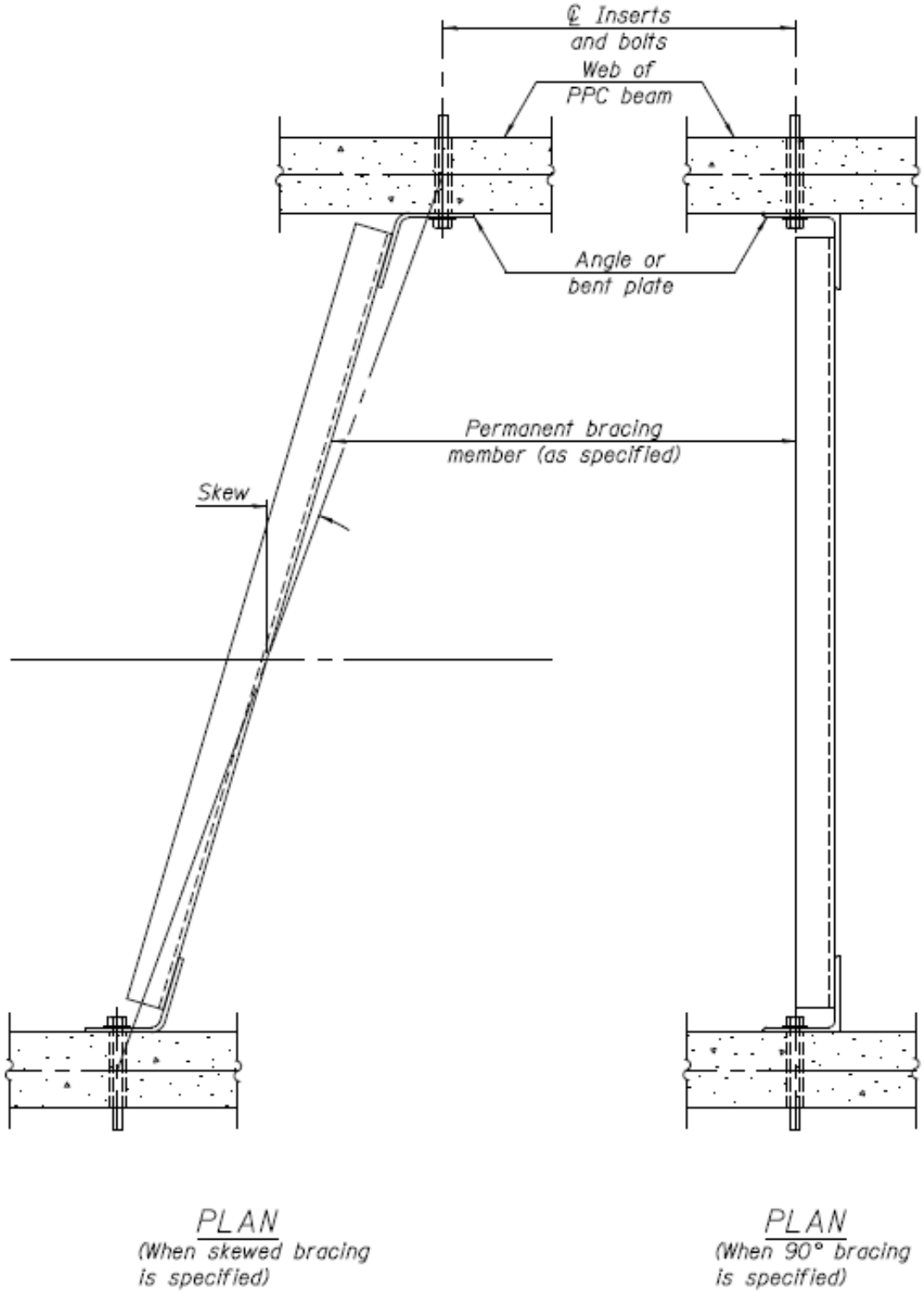

PERMANENT BRACING
FOR PPC BEAMS

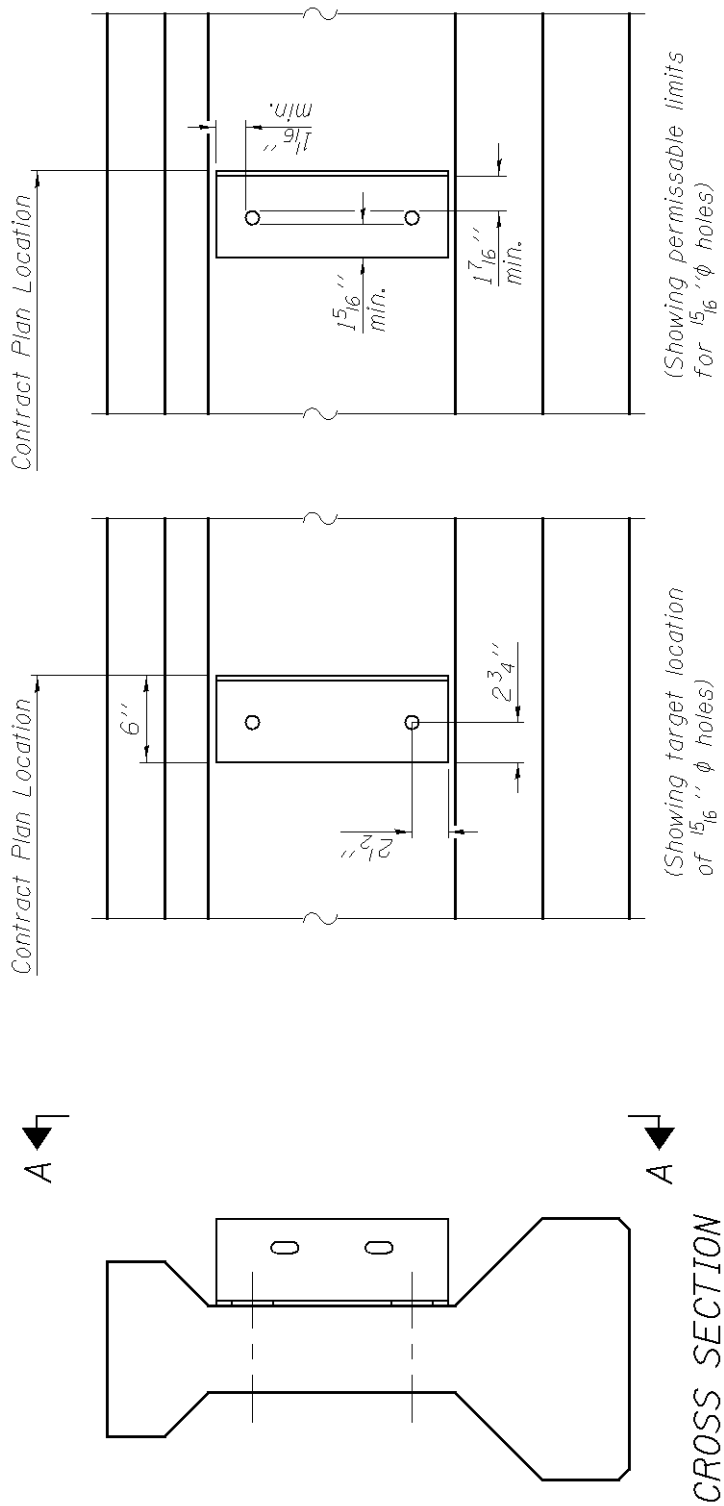

PERMANENT BRACING FOR 36'' & 42'' I-BEAMS

Notes

The permanent bracing angles shall be attached at the prestressed plant before shipping. The 15/16'' diameter holes shall be drilled at the prestress plant such that the angle remains at the contract plan location and the hole stays within the permissable limits shown in view A-A.

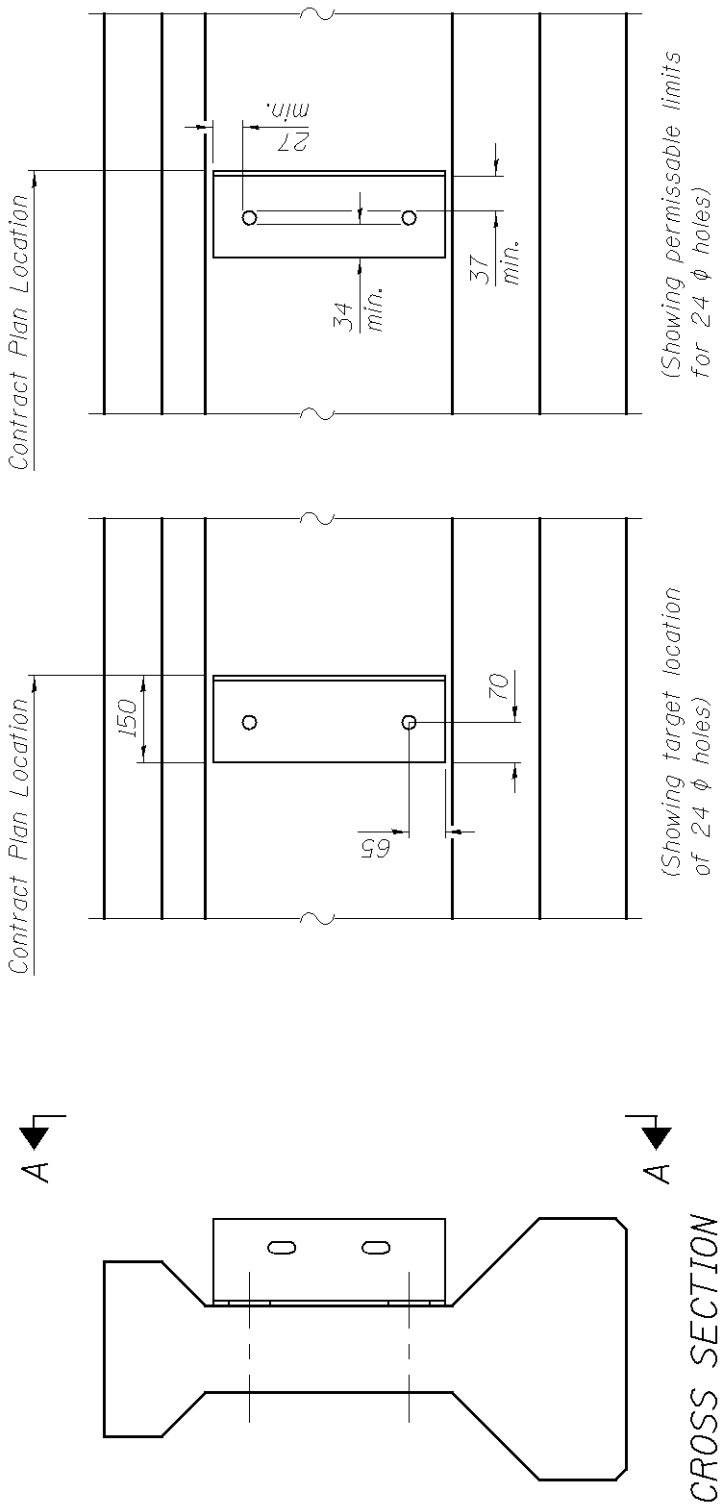

PERMANENT BRACING FOR 914 & 1067 I-BEAMS

Notes

The permanent bracing angles shall be attached at the prestressed plant before shipping. The 24 diameter holes shall be drilled at the prestress plant such that the angle remains at the contract plan location and the hole stays within the permissable limits shown in view A-A.

All dimensions are in millimeters (mm) except as shown.

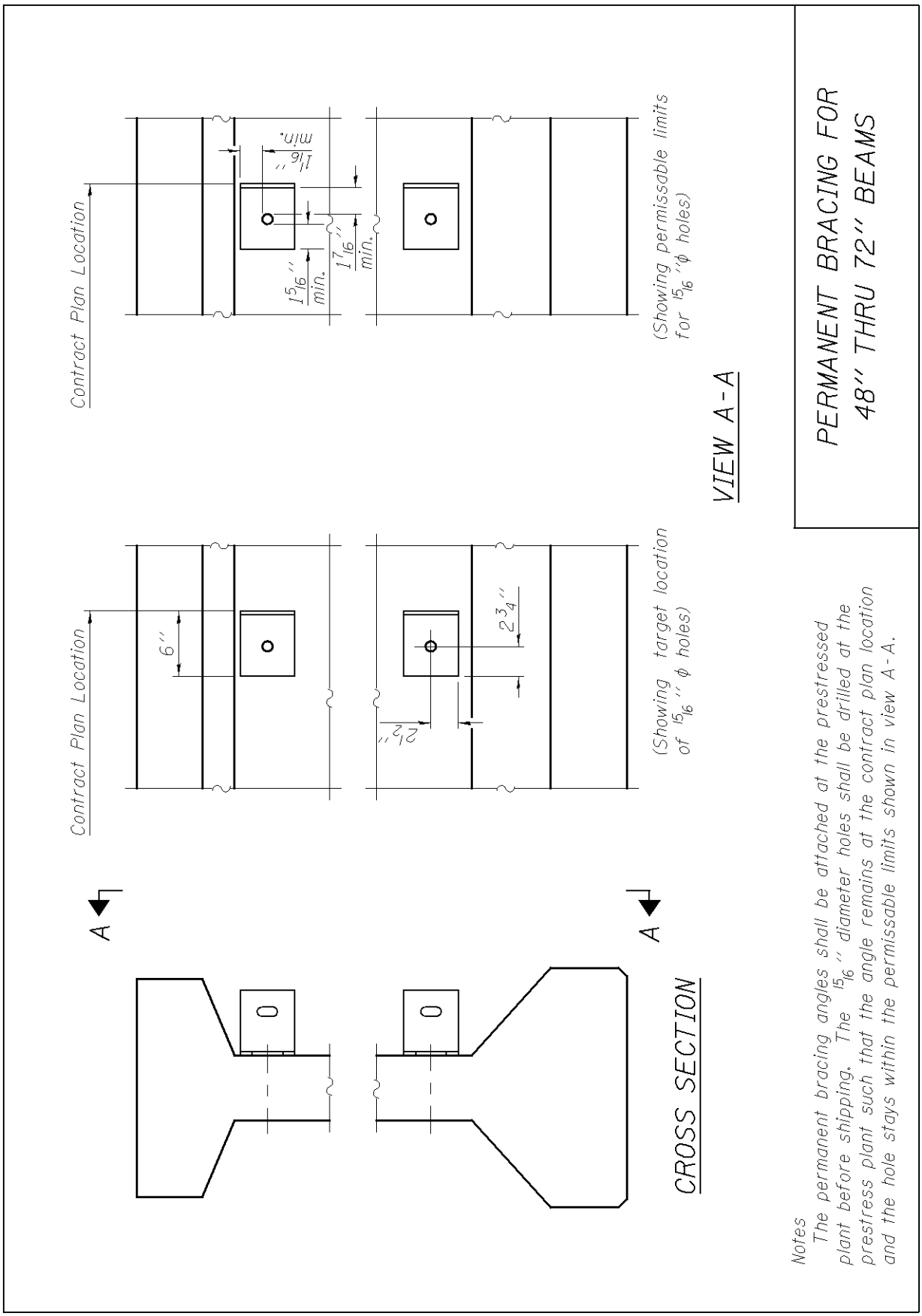
Contract Plan Location
1 15/16'' min.
1 7/16'' min.
1 1/16'' min.
(Showing permissable limits for 15/16'' ϕ holes)
VIEW A-A
PERMANENT BRACING FOR 48'' THRU 72'' BEAMS
Contract Plan Location
6''
2 1/2''
2 3/4''
(Showing target location of 15/16'' ϕ holes)
A
A
CROSS SECTION
Notes
The permanent bracing angles shall be attached at the prestressed plant before shipping. The 15/16'' diameter holes shall be drilled at the prestress plant such that the angle remains at the contract plan location and the hole stays within the permissable limits shown in view A-A.

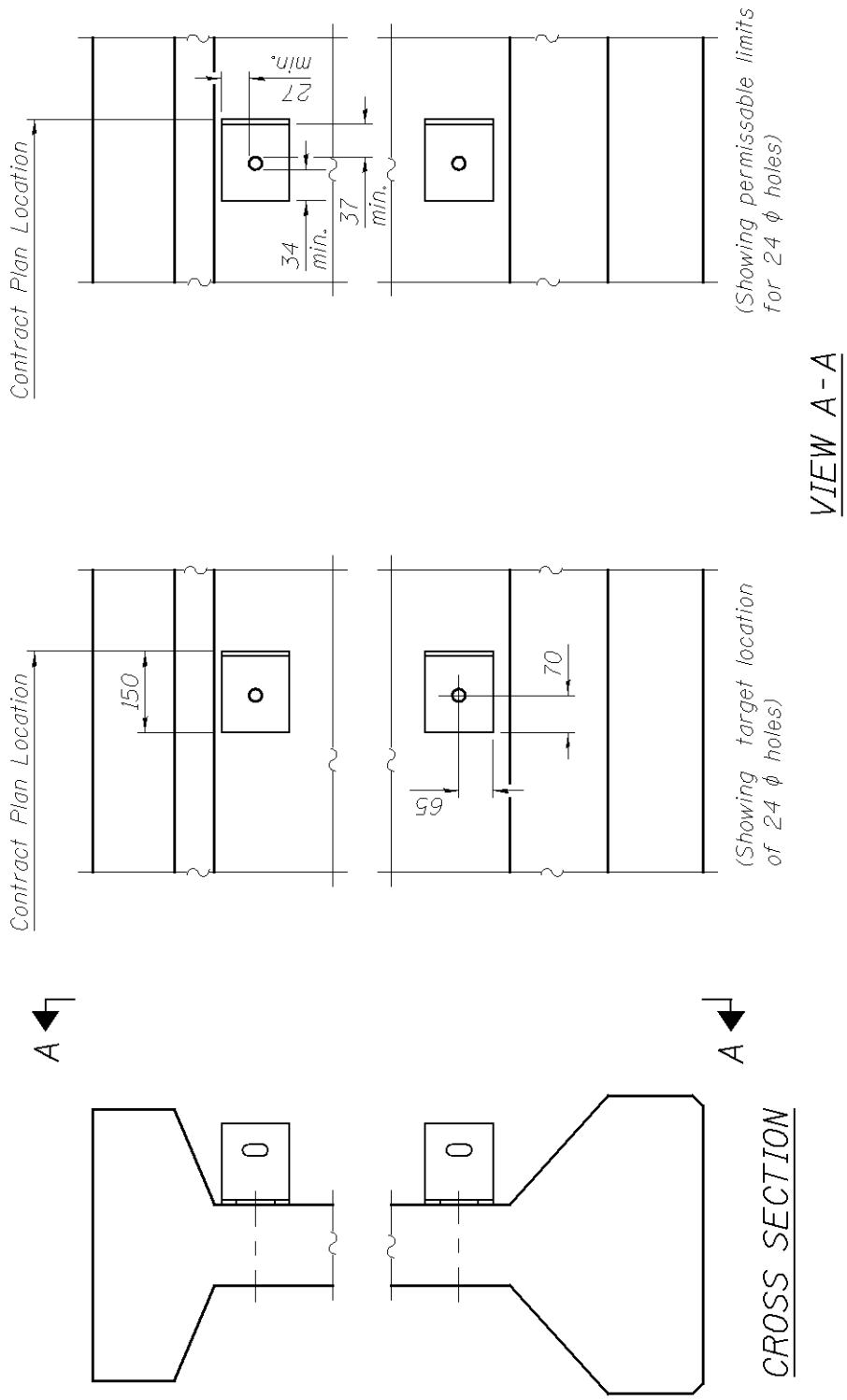

PERMANENT BRACING FOR 1219 THRU 1829 BEAMS

Notes

The permanent bracing angles shall be attached at the prestressed plant before shipping. The 24 diameter holes shall be drilled at the prestress plant such that the angle remains at the contract plan location and the hole stays within the permissable limits shown in view A-A.

All dimensions are in millimeters (mm) except as noted.

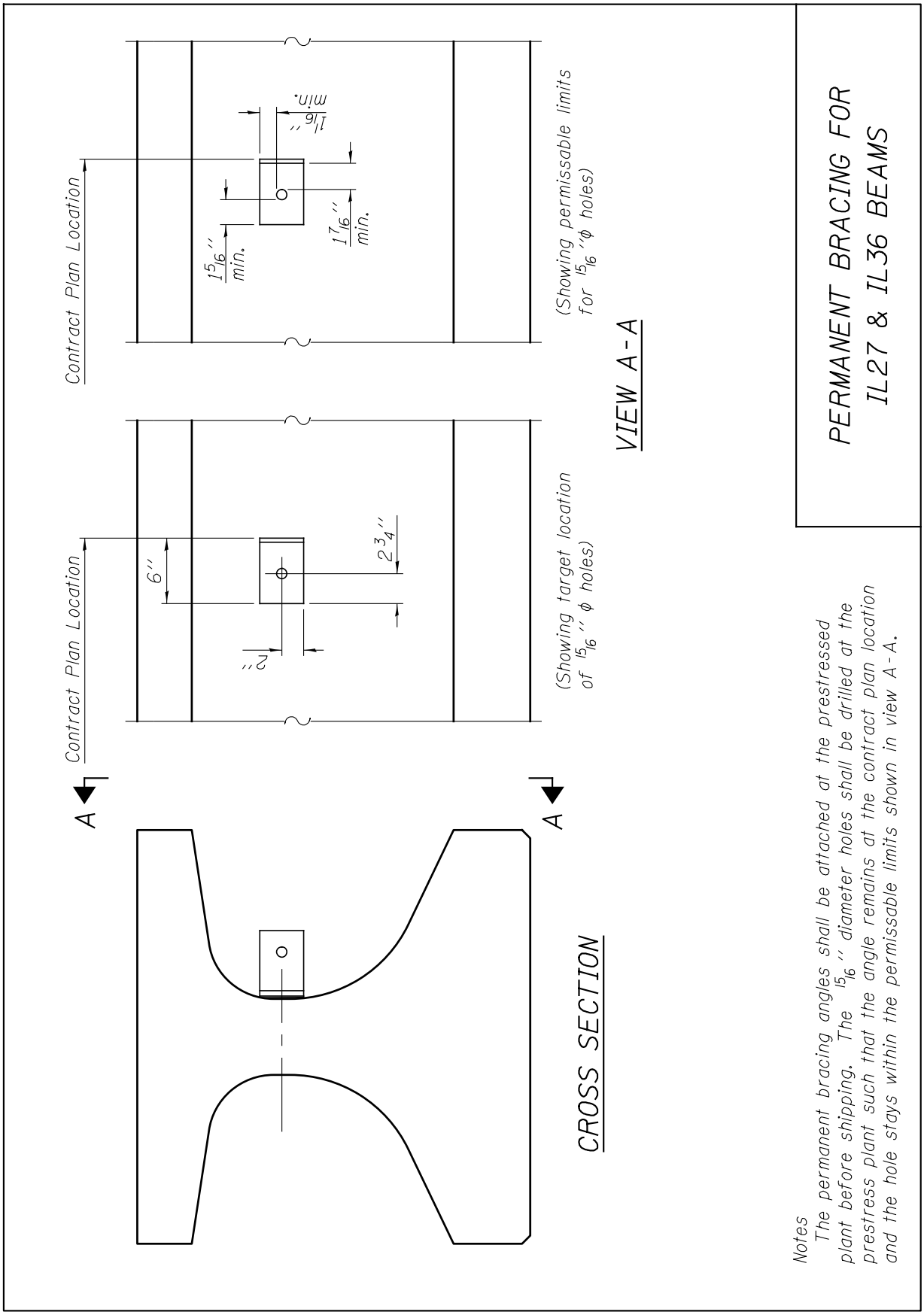
Contract Plan Location
1 5/16'' min.
1 7/16'' min.
1 1/16'' min.
(Showing permissable limits for 15/16'' ϕ holes)
VIEW A-A
Contract Plan Location
6''
2''
2 3/4''
(Showing target location of 15/16'' ϕ holes)
A
A
CROSS SECTION
PERMANENT BRACING FOR IL27 & IL36 BEAMS
Notes
The permanent bracing angles shall be attached at the prestressed plant before shipping. The 15/16'' diameter holes shall be drilled at the prestress plant such that the angle remains at the contract plan location and the hole stays within the permissable limits shown in view A-A.

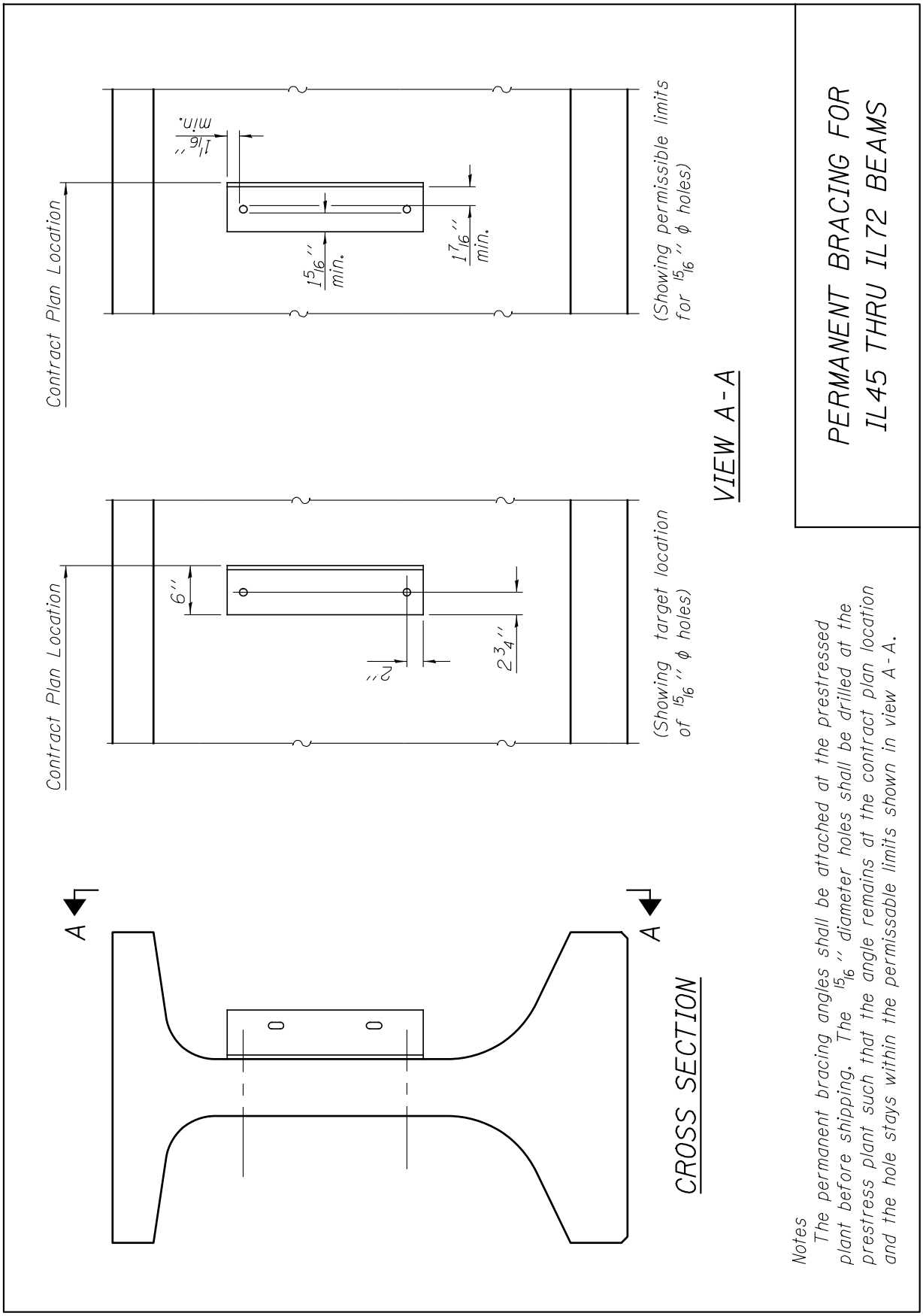
Contract Plan Location
11/16'' min.
15/16'' min.
17/16'' min.
(Showing permissible limits for 15/16'' ϕ holes)
VIEW A-A
PERMANENT BRACING FOR IL45 THRU IL72 BEAMS
Contract Plan Location
6''
2 3/4''
2''
(Showing target location of 15/16'' ϕ holes)
A
A
CROSS SECTION
Notes
The permanent bracing angles shall be attached at the prestressed plant before shipping. The 15/16'' diameter holes shall be drilled at the prestress plant such that the angle remains at the contract plan location and the hole stays within the permissable limits shown in view A-A.

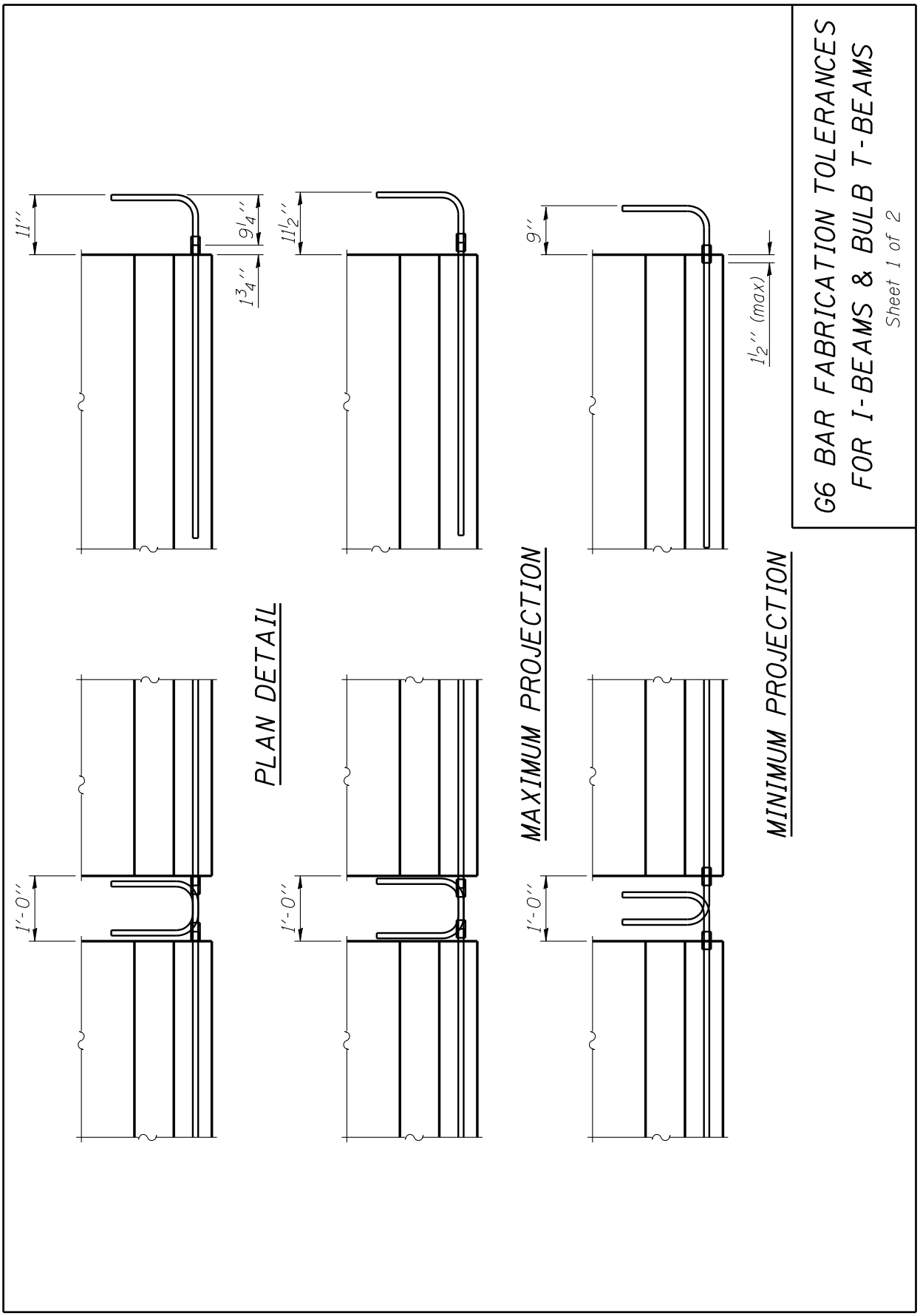
11''
9 1/4''
1 3/4''
11 1/2''
9''
1 1/2'' (max)
1'-0''
1'-0''
1'-0''
PLAN DETAIL
MAXIMUM PROJECTION
MINIMUM PROJECTION
G6 BAR FABRICATION TOLERANCES
FOR I-BEAMS & BULB T-BEAMS
Sheet 1 of 2

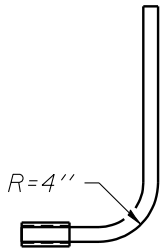

DETAIL A

Notes:

The tolerance for the G6 bar assembly projection out of the beam end is based upon field constructability constraints and geometric fabrication limitations from a specific supplier. The $9\frac{1}{4}$" leg of the hook bar may be smaller provided a supplier can make it and there is adequate length to thread the coupler flush with the end of the bar as shown in "Detail A". The entire G6 bar assembly shall be provided as a complete system from one supplier. If the fabricator elects to utilize assembly projections near the minimum limit a blockout in the beam may be necessary to allow for proper installation of the coupler into the beam after casting.

A minimum thread engagement of $1\frac{1}{4}$" on both sides of the coupler is required for proper installation.

G6 BAR FABRICATION TOLERANCES
FOR I-BEAMS & BULB T-BEAMS

Sheet 2 of 2

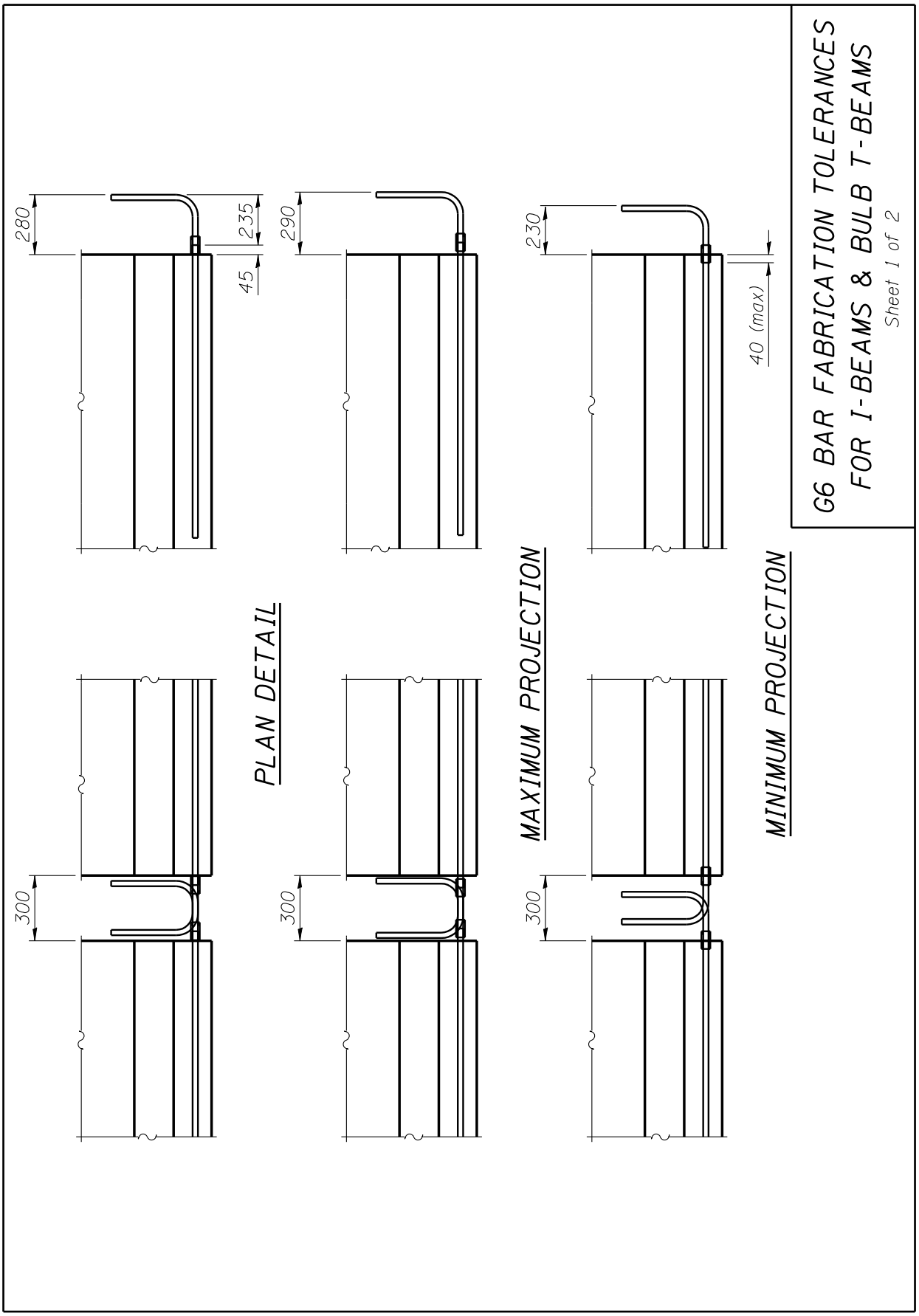
280
235
45
290
230
40 (max)
300
300
300
PLAN DETAIL
MAXIMUM PROJECTION
MINIMUM PROJECTION
G6 BAR FABRICATION TOLERANCES
FOR I-BEAMS & BULB T-BEAMS
Sheet 1 of 2

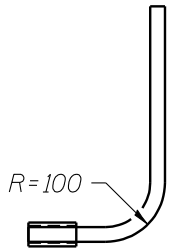

DETAIL A

Notes:

The tolerance for the G6 bar assembly projection out of the beam end is based upon field constructability constraints and geometric fabrication limitations from a specific supplier. The 235 leg of the hook bar may be smaller provided a supplier can make it and there is adequate length to thread the coupler flush with the end of the bar as shown in "Detail A". The entire G6 bar assembly shall be provided as a complete system from one supplier. If the fabricator elects to utilize assembly projections near the minimum limit a blockout in the beam may be necessary to allow for proper installation of the coupler into the beam after casting.

A minimum thread engagement of 32 on both sides of the coupler is required for proper installation.

All dimensions are in millimeters (mm) except as noted.

G6 BAR FABRICATION TOLERANCES FOR I-BEAMS & BULB T-BEAMS

Sheet 2 of 2

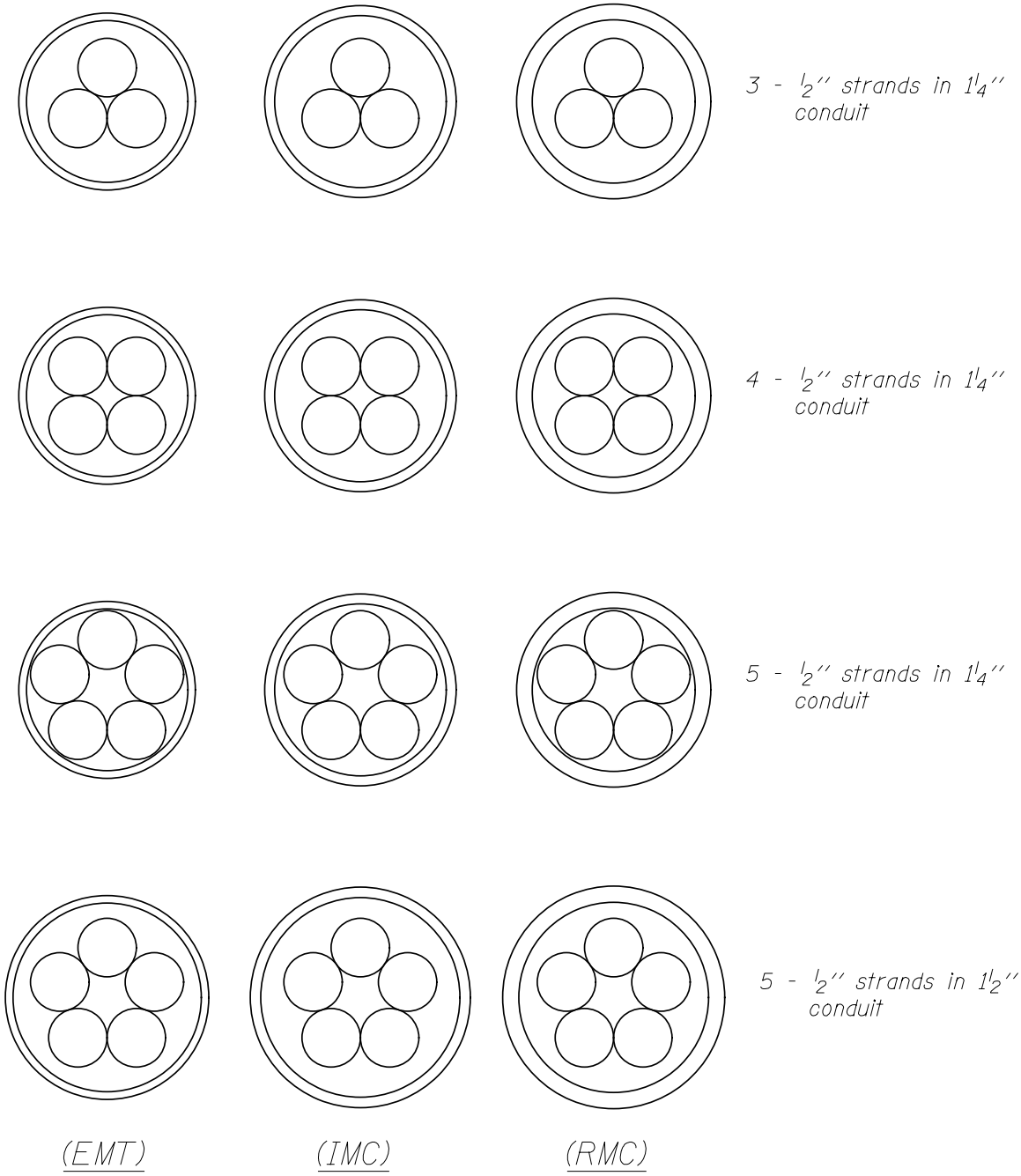

RMC = Rigid Metal Conduit.
IMC = Intermediate Metal Conduit.
EMT = Electrical Metal Conduit.

Notes:

Rigid Metal Conduit (RMC) is not recommended because it may split or crack in the bending process.

1 1/2'' diameter conduit may be permitted for 5 strand packs only.

CROSS SECTIONS THRU LIFTING LOOP AT CONDUIT PIPE

This Page Intentionally Left Blank

Theory and Methods

Calibration and Practice

Anchorage Movement

Introduction

A calibrated relationship between the number of tensioned strands and expected anchorage movement for beds that exhibit this type of “shortening” shall be determined and/or re-verified on an annual basis by Producers.

Given below are discussions concerning some basic theories concerning the mechanics of anchorage movement as well as an empirical procedure for calibration. This is a companion document that is intended to be used in conjunction with the Departmental spreadsheet for calibration of beds which exhibit anchorage movement.

When determining the corrections for elongation and over-pulling of strands for beds that exhibit anchorage movement, a theoretical value for total movement is usually not able to be determined which can then be adjusted by a calibration factor. As such, the calibration procedure is potentially iterative in nature, especially for new beds. There also may or may not be a linear relationship between the number of strands tensioned and actual total anchorage movement.

Development of a calibrated relationship between the number of tensioned strands and expected anchorage movement entails making estimates of total anchorage movement for several strand patterns and then verifying these estimates by measurements of movement from actual tensioning operations. If the estimated movements are not sufficiently close to those measured after tensioning, at least one more iteration should be performed until the estimated and actual anchorage movements converge within a certain percentage of each other.

The Departmental spreadsheet for calibration of beds that exhibit anchorage movement establishes a graphical relationship between the number of strands pulled and expected movement. The information from this graph can be used in the Department’s general spreadsheet that is used to determine corrections for elongation and over-pulling of strands from all potential sources of error for beams to be delivered to an actual project.

Estimated Corrections

Basic Concepts

The following are the most important concepts and basic formulae for understanding the theory of anchorage movement associated with strand tensioning in prestressing beds:

1. Anchorages for prestressing beds that are not sufficiently “rigid” can tend to appreciably move or rotate inward (or some combination of the two) during tensioning operations. In most cases, these movements are small and do not indicate that the structural system used to resist the tension in the strands is “under strength”. There are several potential sources for this lack of rigidity which can be difficult to pinpoint and may be inherent to the structural design configuration of the bed itself. Due to this uncertainty, a relationship between the number of strands pulled (i.e. the total force applied to the bed) and total anchorage movement is potentially non-linear in nature.

2. Hooke's Law applies to the strands and they are deforming in the elastic range, which can be expressed as:

   $E\varepsilon = \sigma$

   Where: E = Modulus of elasticity for strands (E_s) (psi or kPa)
   ε = Strain (in./in. or mm/mm)
   = $\Delta L / L$
   σ = Stress (psi or kPa)
   = P / A

   Where: ΔL = Change in length of strand (in. or mm)
   L = Total length of strand (L_S) (in. or mm)
   P = Force in strand (P_{am}) (lb. or N)
   A = Cross sectional area of a strand (A_s) (in.^{2} or mm^2)

   Consequently, Hooke's Law can be rewritten as:

   $E (\Delta L / L) = P / A$

   Rearranging terms leads to,

   $\Delta L = (P / A) \times (L / E)$

   And,

   $P = (\Delta L \times E \times A) / L$

   These two basic formulae or mechanics relationships are useful for calculating several types of corrections, including those for beds which exhibit anchorage movement. Note that the variable names are "generic" here except as noted in some of the definitions above.

3. For single strand tensioning, the overall average force for a strand in a group of tensioned strands is equal to the design pulling force (P_i). However, this does not imply that all strands have equal force. Strands pulled at the beginning of a tensioning operation for a beam will be permanently "under-pulled" and strands pulled at the end of a tensioning operation will be permanently "over-pulled" after tensioning operations are fully completed. There is a non-uniform pulling force because some of the tension from each strand is potentially absorbed by the end anchorages as appreciable movement instead of rigidly resisting the full tension. At the same time the anchorages are moving, the strand currently being tensioned, and all previously pulled strands, are "relaxing".

Estimated Movement Procedure

The estimated corrections for strand pulling force and elongation can be calculated using the basic concepts described above with the following procedure:

1. For a given number of tensioned strands, simply estimate anchorage movement (Δ_T). For an established bed, the Producer should have some general idea of the magnitude of total anchorage movement for a given number of tensioned strands. In which case, the estimated anchorage movement may be relatively accurate. For a new bed, there may be no basis for the estimation of movement. As such, it is simply a guess.

2. Determine estimated elongation correction per strand, Δ_{am}, as:

   $\Delta_{am} = \Delta_T / 2 + \Delta_T / N_s$

   Or,

   $\Delta_{am} = \Delta_T / 2 + \Delta_{ps}$

   Where: $\Delta_{ps} = \Delta_T / N_s$
   N_s = No. of strands

   Notes: Δ_{am} can be considered the estimated correction per strand for anchorage movement while the actual correction is denoted as e_{am} in the Department's prestressing spreadsheets.

   In a simplistic sense, if the estimate is accurate (and the relationship between the number of tensioned strands and total anchorage movement is sufficiently linear), the term Δ_{ps} can be thought of as the amount the anchorages move for each strand tensioned. Essentially, a force corresponding to Δ_{ps} (or Δ_T / N_s) flows from the strand into the bed end anchorages and manifests itself as an appreciable, but slight deflection. At the same time, the strand also "relaxes" a slight amount. After half of the strands have been tensioned, the total anchorage movement will be about $\Delta_T / 2$. As such, the first strand tensioned will have also relaxed by about $\Delta_T / 2$. At this stage of tensioning operations, the first strand pulled will have a tension that is equivalent to the design load (P_i) and the current strand will be over-pulled by about $\Delta_T / 2$. After all the strands have been tensioned, the first strand will have further relaxed another $\Delta_T / 2$. Therefore, the first strand will now be under-pulled by $\Delta_T / 2$, while the strand pulled at the midway point of tensioning operations is pulled to about the design elongation because it has only relaxed by $\Delta_T / 2$. The last strand is, of course, over-pulled by about $\Delta_T / 2$. Consequently, the gross average force for all the strands after all tensioning operations are completed is P_i, and the total force is equal to $P_i \times N_s$. As a result, the last strand tensioned has the maximum permanent over-pull associated with an elongation of $\Delta_T / 2$ (with the elongation associated with Δ_{ps} flowing into movement of the end anchorages) and all other strands have a temporary over-pull associated with an elongation of $\Delta_T / 2$.

3. Determine the estimated force correction per strand, p_{am}, as:

   $p_{am} = (\Delta_{am} \times E_s \times A_s) / L_S$

   Where: E_s = Modulus of elasticity of strands (psi or kPa)
   A_s = Cross sectional area of strand (in.^{2} or mm^2)
   L_S = Total length of strands (in. or mm)

   Notes: p_{am} can be considered the estimated correction per strand for anchorage movement while the actual correction for anchorage movement is denoted as P_{am} in the Department's prestressing spreadsheets.

Graphical Calibration

The estimated and actual total anchorage movements do not necessarily have to correspond exactly in order to avoid another iteration. However, the correlation between the two should be fairly reasonable. If any one of the estimated and actual values for total anchorage movement deviate from each other by more than 15 %, another iteration should be performed. The new estimates for the next iteration should be the measured total anchorage movement values from the first iteration. If there are significant differences from estimated and measured values from year-to-year, these may be indicators of a potential problem or problems with the bed or other equipment utilized during strand tensioning.

The following procedure should be used to calibrate a bed for anchorage movement. This procedure is identical to that programmed into the Departmental spreadsheet for calibration of beds with anchorage movements. Note that the annual calibration of an existing bed may take place over a reasonable period of time as part of normal tensioning operations during Producer fabrication of beams. A reasonable period of time may range from 2 weeks to 3 months for an existing bed depending on the Producer's anticipated production schedule. For new beds, a full initial calibration before a bed is used to produce beams for IDOT may be required by the Department.

1. Choose four strand patterns that reflect a reasonable range of beam lengths which are either historically representative of those that have been fabricated in the past or are expected to be fabricated in the near future. In simplistic terms, choose patterns that range in number of strands from small to large. If patterns with draped strands are chosen, the ratio of the draped strand length to straight strand length should be less than or equal to 1.002.

2. Estimate Δ_T, and calculate Δ_{am}, and p_{am} (as defined above) for each chosen strand pattern.

3. Determine all other applicable force and elongation corrections to be applied (e.g. live end seating, dead end seating, thermal, etc.)

4. Perform actual tensioning operations for the four chosen strand patterns using the corrections determined in 1 to 3 above.

5. Measure the actual total anchorage movement, $M_{T(m)}$, for each of the four chosen strand patterns.

6. Calculate the ratio of measured total anchorage movement to the estimated values for the four chosen strand patterns. If one or more of these ratios is greater than 1.15 or less than 0.85, another iteration should be performed (i.e. repeat steps 1 to 6).

7. Construct a graph that establishes a relationship between the number of strands tensioned and total anchorage movement as shown below.

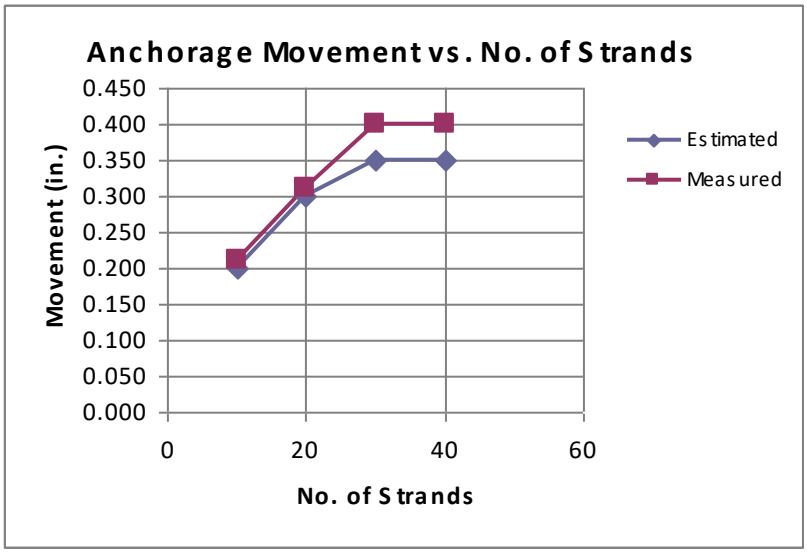

Practice

In order to determine the total expected anchorage movement, M_T, for actual tensioning operations for a particular strand pattern, simply read from the chart above (from the Department's calibration spreadsheet) and use the "Measured" line.

Theory and Methods

Calibration, Practice and Maximum Number Strands Permitted

Self-Stressing Beds/Forms

Introduction

Calibration factors to be used when calculating corrections for elongation and over-pulling of strands on beds with self-stressing forms shall be determined and/or re-verified on an annual basis by Producers. Given below is the theory and procedure to be used by Producers for calibration of a bed that employs forms of this type. This is a companion document that is intended to be used in conjunction with the Departmental spreadsheet for calibration of beds with self-stressing forms. Note that each individual form requires its own calibration.

When determining the corrections for elongation and over-pulling of strands on beds with self-stressing forms, the theoretical value for total form or bed shortening (ΔL_B) should always be calculated first. The theoretical value is multiplied by a calibration factor (CF_{SB}) to arrive at a more accurate number for total form shortening (S_B) for a given strand pattern. S_B is the total form shortening that is input into the Department's prestressing spreadsheets which is used to determine corrections for elongation and over-pulling of strands from all potential sources of error for beams to be delivered to an actual project.

A discussion of the theoretical mechanics associated with self-stressing forms and how to account for their shortening during strand tensioning is given below. A following discussion provides a method for determining the calibration factor, CF_{SB}, for beds with self-stressing forms. Sections on use of calibration factors in practice and determining the maximum number of strands permitted for a set of self-stressing forms are also included.

Theoretical Corrections

Basic Concepts

The following are the most important concepts and basic formulae for understanding the theory of shortening associated with strand tensioning for beds with self-stressing forms:

1. The total force in a set of self-stressing forms will always be equal to the total force in the strands, which can be expressed as:

   $P_B = P_S$

   Where: P_B = Total force in forms (lb. or N)
   P_S = Total force in all strands (lb. or N)

2. Hooke's Law applies to the forms and the strands, and they are both deforming in the elastic range, which can be expressed as:

   $E\varepsilon = \sigma$

   Where: E = Modulus of elasticity of steel for forms (E_B) and for strands (E_s) (psi or kPa)
   ε = Strain (in./in. or mm/mm)
   = $\Delta L / L$
   σ = Stress (psi or kPa)
   = P / A

   Where: ΔL = Change in length of forms (ΔL_B) or strands (ΔL_S) (in. or mm)
   L = Total length of forms (L_B) or strands (L_S) (in. or mm)
   P = Force in forms (P_B) or strands (P_S) (lb. or N)
   A = Cross sectional area of forms (A_B*) or strands (A_s) (in.^{2} or mm^2)

   * For A_B, this value may typically be recommended by the Manufacturer of the forms and may also be a "composite" area that takes into account other aspects of a form's tendency to shorten. These aspects can include asymmetric geometries and form stiffeners.

   Consequently, Hooke's Law can be rewritten as:

   $E (\Delta L / L) = P / A$

   Rearranging terms leads to,

   $\Delta L = (P / A) \times (L / E)$

   And,

   $P = (\Delta L \times E \times A) / L$

   These two basic formulae or mechanics relationships are useful for calculating several types of corrections, including those for beds with self-stressing forms. Note that the variable names are "generic" here except as noted in the definitions above.

3. For single strand tensioning, the overall average force for a strand in a group of tensioned strands is equal to the design pulling force (P_i). However, this does not imply that all strands have equal force. Strands pulled at the beginning of a tensioning operation for a beam will be permanently "under-pulled" and strands pulled at the end of a tensioning operation will be permanently "over-pulled" after tensioning operations are fully completed. There is a non-uniform pulling force because some of the tension from each strand "flows" into the forms, causing them to continually shorten as tensioning operations proceed. At the same time the forms are shortening, the strand currently being tensioned, and all previously pulled strands, are "relaxing".

Procedure

The theoretical corrections for strand pulling force and elongation can be calculated using the basic concepts described above with the following procedure:

1. Determine the total design pulling force for a set of strands, which can be expressed as:

   $P_S = P_i \times N_s$

   Where: P_i = Design plan load per strand (lbs or N)
   N_s = Total number of strands.

2. Set P_S (force in strands) = P_B (force in forms), and determine total bed shortening (ΔL_B) using Hooke's Law, which can be expressed as:

   $\Delta L_B = (P_B / A_B) \times (L_B / E_B)$

   Where: A_B = Cross sectional area of the forms (in.^{2} or mm^2)
   L_B = Length of forms (in. or mm)
   E_B = Modulus of elasticity of the forms (psi or kPa)

   Note: ΔL_B can be considered the theoretical total bed or form shortening while the actual total bed or form shortening is denoted as S_B in the Department's prestressing spreadsheets.

3. Determine the theoretical elongation correction per strand as:

   $\Delta_{sb} = \Delta L_B / 2 + \Delta L_B / N_s$

   Or,

   $\Delta_{sb} = \Delta L_B / 2 + \Delta_{ss}$

   Where: $\Delta_{ss} = \Delta L_B / N_s$

   Notes: Δ_{sb} can be considered the theoretical correction per strand for form shortening while the actual correction for bed or form shortening is denoted as e_{sb} in the Department's prestressing spreadsheets.

   In a simplistic sense, the term Δ_{ss} can be thought of as the length the forms shorten for each strand tensioned. Essentially, a force corresponding to Δ_{ss} (or $\Delta L_B / N_s$) flows from the strand and into the forms causing them to compress a slight amount and the strand to "relax" a slight amount. After half of the strands have been tensioned, the total form or bed shortening will be about $\Delta L_B / 2$. As such, the first strand tensioned will have also relaxed by about $\Delta L_B / 2$. At this stage of tensioning operations, the first strand pulled will have a tension that is equivalent to the design load (P_i) and the current strand will be over-pulled by about $\Delta L_B / 2$. After all the strands have been tensioned, the first strand will have further relaxed another $\Delta L_B / 2$. Therefore, the first strand will now be under-pulled by $\Delta L_B / 2$, while the strand pulled at the midway point of tensioning operations is pulled to about the design elongation because it has only relaxed by $\Delta L_B / 2$. The last strand is, of course, over-pulled by

about ΔL_B / 2. Consequently, the gross average force for all the strands after all tensioning operations are completed is P_i, and the total force is equal to P_S (and P_B). As a result, the last strand tensioned has the maximum permanent over-pull associated with an elongation of ΔL_B / 2 (with the elongation associated with Δ_{ss} flowing into the forms) and all other strands have a temporary over-pull associated with an elongation of ΔL_B / 2.

4. Determine the theoretical force correction per strand, p_b, as:

   $p_b = (\Delta_{sb} \times E_s \times A_s) / L_S$

   Where: E_s = Modulus of elasticity of strands (psi or kPa)
   A_s = Cross sectional area of strand (in.^{2} or mm^2)
   L_S = Total length of strands (in. or mm)

   Notes: p_b can be considered the theoretical correction per strand for bed or form shortening while the actual correction for bed or form shortening is denoted as P_{sb} in the Department's prestressing spreadsheets.

Calibration

The theoretical and actual shortening of self-stressing beds generally will not correspond exactly, nor should they be expected too. In fact, the two may deviate significantly depending on the exact configuration of the forms and the bed. Complex form geometry, stiffeners, friction, etc. can all cause the theoretical and actual shortening to differ by as much as 75%. However, if the calibration factors differ significantly from year-to-year, this may be an indicator of a potential problem or problems with the self-stressing forms or other equipment utilized during strand tensioning.

The following procedure should be used to calibrate self-stressing forms. This procedure is identical to that programmed into the Departmental spreadsheet for calibration of beds with self-stressing forms. Note that the annual calibration of an existing bed may take place over a reasonable period of time as part of normal tensioning operations during Producer fabrication of beams. A reasonable period of time may range from 2 weeks to 3 months for an existing bed depending on the Producer's anticipated production schedule. For new beds or for Producers who have not fabricated beams for IDOT before, a full initial calibration before a bed is used to produce beams for IDOT will be required by the Department.

1. Choose three strand patterns that reflect a reasonable range of beam lengths which are either historically representative of those that have been fabricated in the past or are expected to be fabricated in the near future. In simplistic terms, choose patterns that have a small, medium and large number of strands. If patterns with draped strands are chosen, the ratio of the draped strand length to straight strand length should be less than or equal to 1.002.

2. Calculate ΔL_B, Δ_{sb}, and p_b (as defined above) for each chosen strand pattern.

3. Determine all other applicable force and elongation corrections to be applied (e.g., live end seating, dead end seating, etc.)

4. Perform actual tensioning operations for the three chosen strand patterns using the corrections determined in 1 to 3 above.

5. Measure the actual total bed shortening, $S_{B(m)}$, for each of the three chosen strand patterns.

6. Calculate the ratio of measured bed shortening to the theoretical values, $CF_{SBi} = S_{B(m)} / \Delta L_B$, for the three chosen strand patterns.

7. Calculate the average of the three values for CF_{SBi} to determine the final calibration factor for the bed/forms, CF_{SB}.

Practice

In order to determine the total bed shortening, S_B, for actual tensioning operations for a particular strand pattern and set of forms after calibration (or re-calibration), the following equations should be employed:

$$S_B = CF_{SB} \times \Delta L_B = CF_{SB} \times (P_B / A_B) \times (L_B / E_B)$$

In which $P_B = P_S$ and is calculated as $P_i \times N_s$.

Maximum No. of Strands Permitted

The Department and AASHTO do not permit any strand to be tensioned (either permanently or temporarily) to greater than 80% of its minimum specified tensile capacity, F_u. This includes the summation of over-pulls from all potential required corrections.

It is probably most straightforward to use the Department's prestressing spreadsheets that calculate corrections for elongation and over-pulling of strands from all potential sources of error in order to determine the maximum number of strands permitted for a set of self-stressing forms.

Producers should simply iterate using a successively larger number of strands (employing a calibrated determination of S_B) until the summation of the design plan force and all corrections is just below 80% of F_u. The maximum force check is made in the Singlet Forces tab of the Department's prestressing spreadsheets.

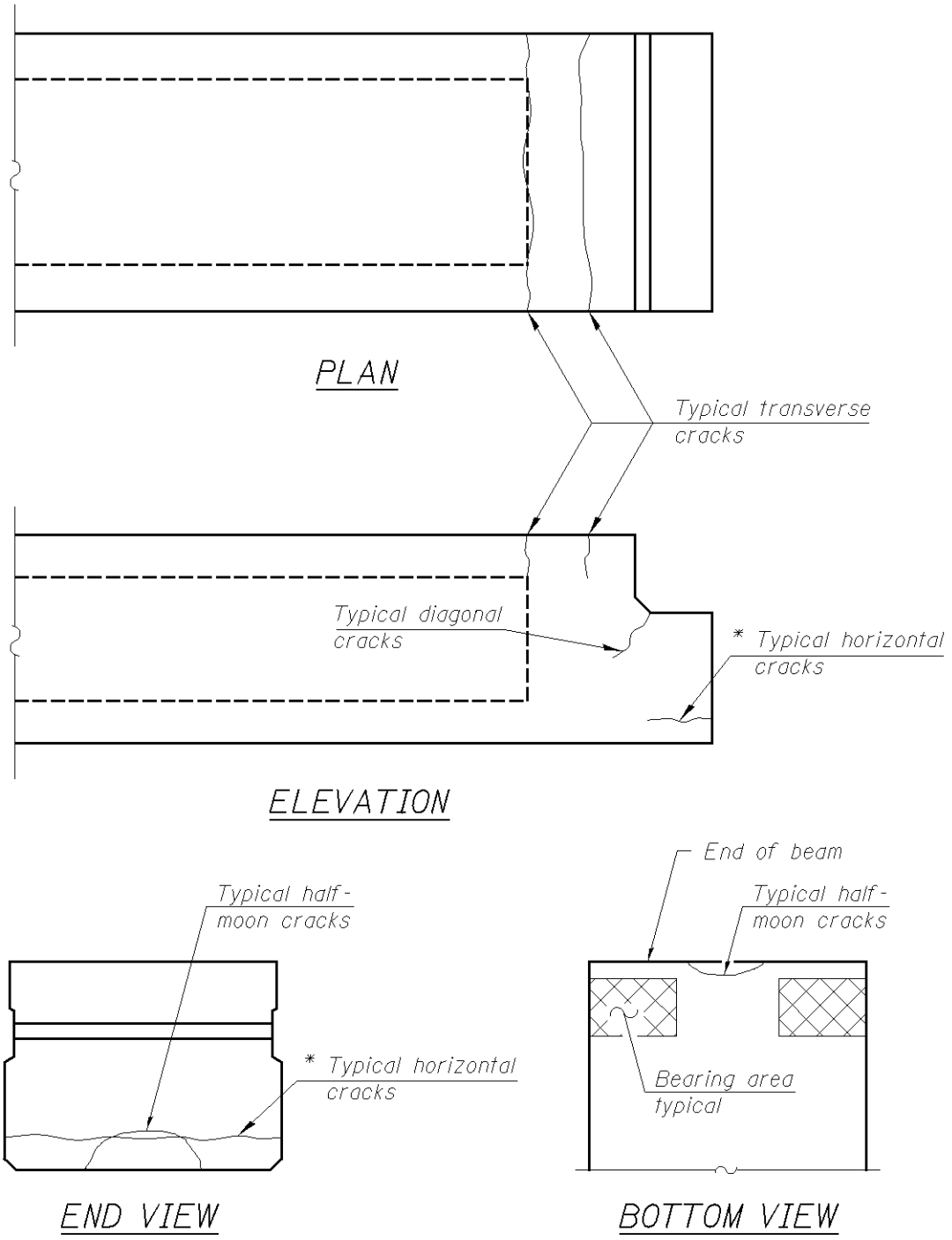

* No cracks, regardless of size, are permitted to follow a strand or cross more than 10% of the strands.

PERMISSIBLE CRACK TYPES FOR PPC DECK BEAMS

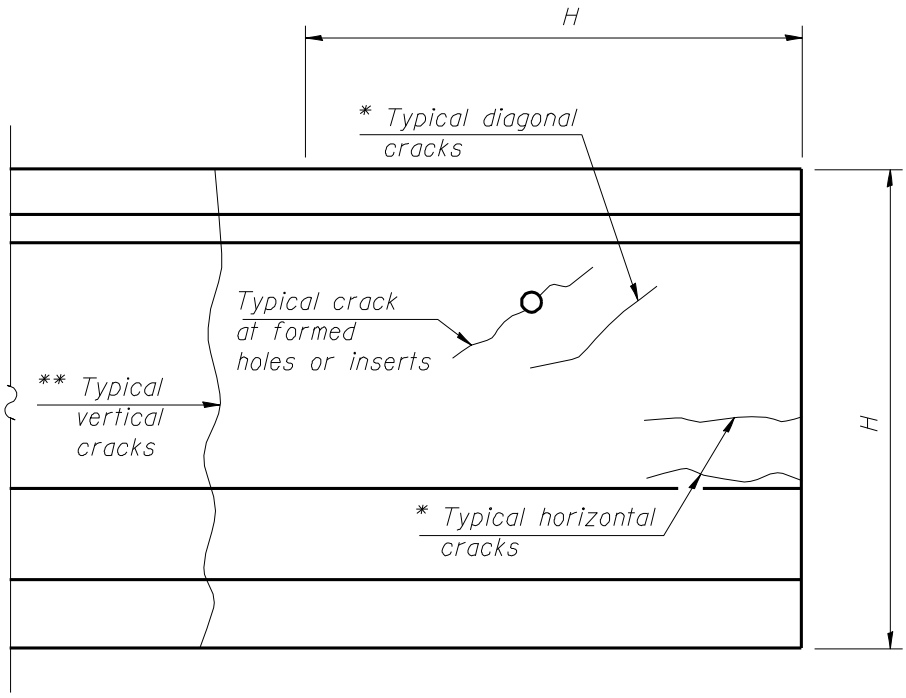

ELEVATION

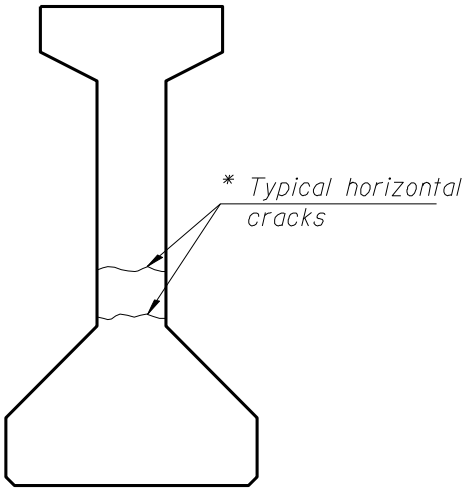

END VIEW

* No cracks, regardless of size, are permitted to follow a strand or cross more than 10% of the strands.

** Permitted only 30'' or more from beam ends .

PERMISSIBLE CRACK TYPES FOR PPC I-BEAMS & BULB T-BEAMS

Illinois Department of Transportation

Qualification Test for Welders and Welding Procedures

Date: _____

Company: _____ Location: _____

Name of Person to be Qualified: _____

Reinforcing Steel Manufacturer: _____

Identifying Bar Making: _____

Size of Reinforcing Bars: Longitudinal: _____ Vertical: _____

Position of Welding*: ☐ Flat ☐ Vertical-up

Welding Machine and settings: _____

Amperage: _____ Polarity: ☐ Straight ☐ Reverse Current: ☐ AC ☐ DC

Welding Rod: Type: _____ Mfg. _____ Mfg. Designation _____ Size _____

Samples marked as follows: _____

Remarks:

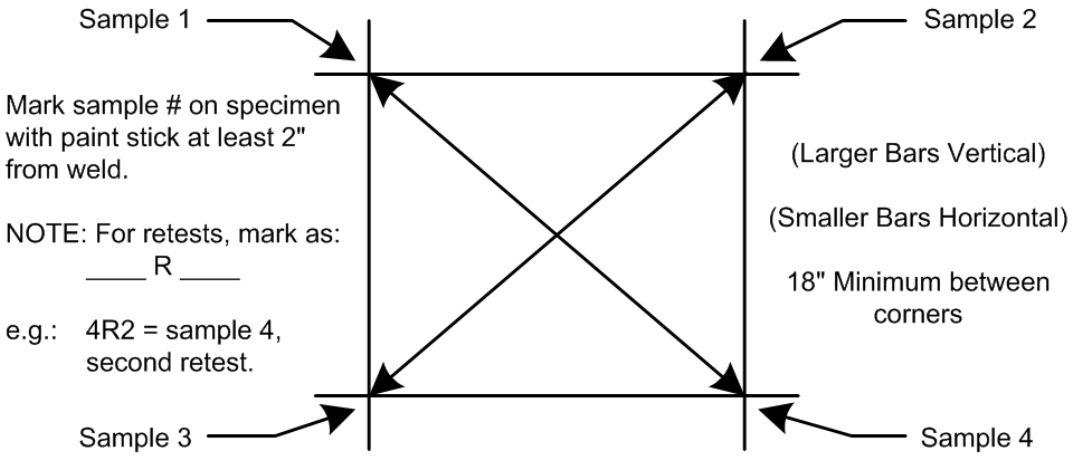

NOTE: Use hacksaw or shears to cut sample bars.
Use same size bars as normally used in beams.
Sample specimen size should be 9" x 9" when submitted to Bureau.

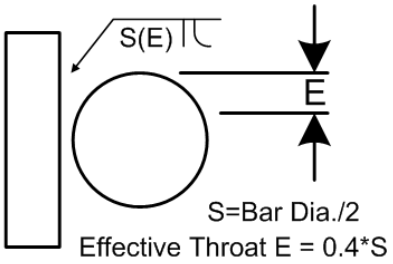

Joint Configuration

Note: If joint configuration detail has vertical bar to left, weld position is flat (downhand) and welder/weld procedure is only qualified for flat. If joint configuration detail has horizontal bar to left, then weld must be vertical-up and welder/weld procedure is qualified for flat or vertical-up.

IDOT Inspector Name (Print) _____

IDOT Inspector Signature _____

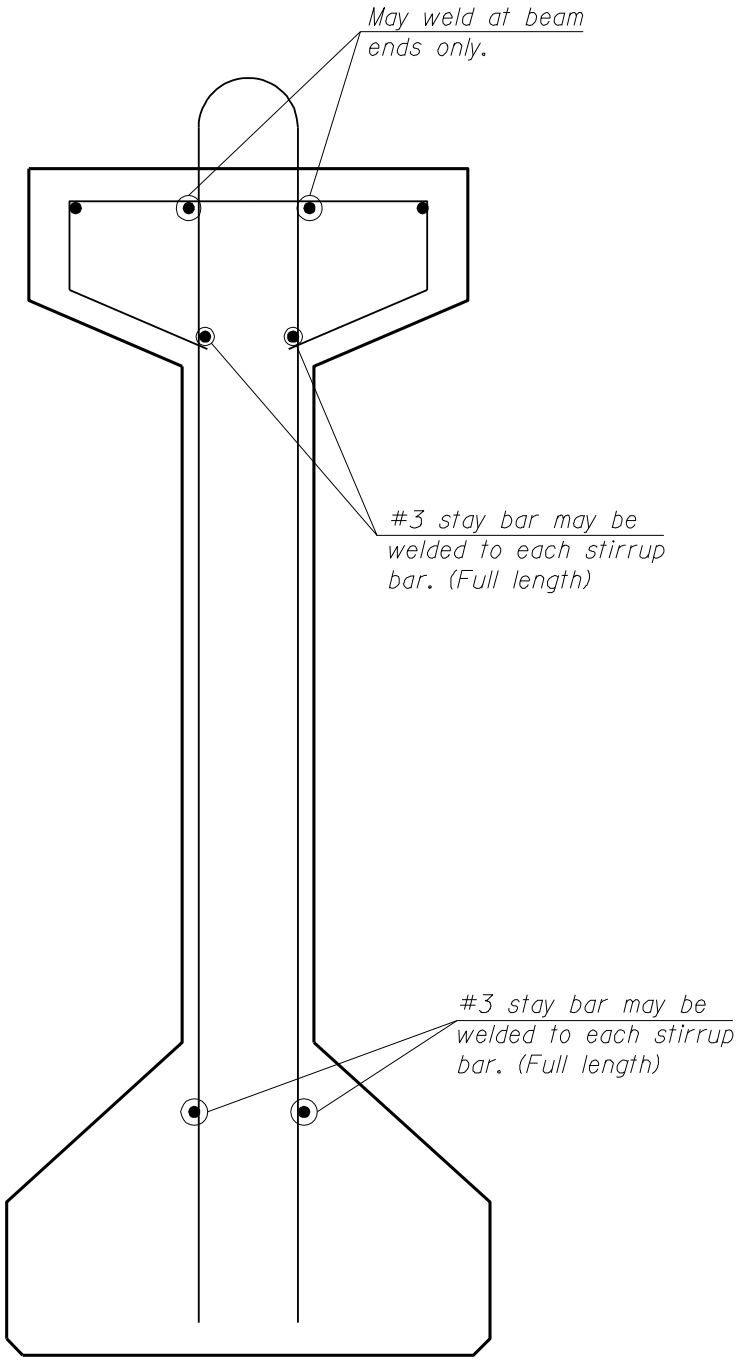

ACCEPTABLE WELDING LOCATIONS FOR PPC I-BEAM

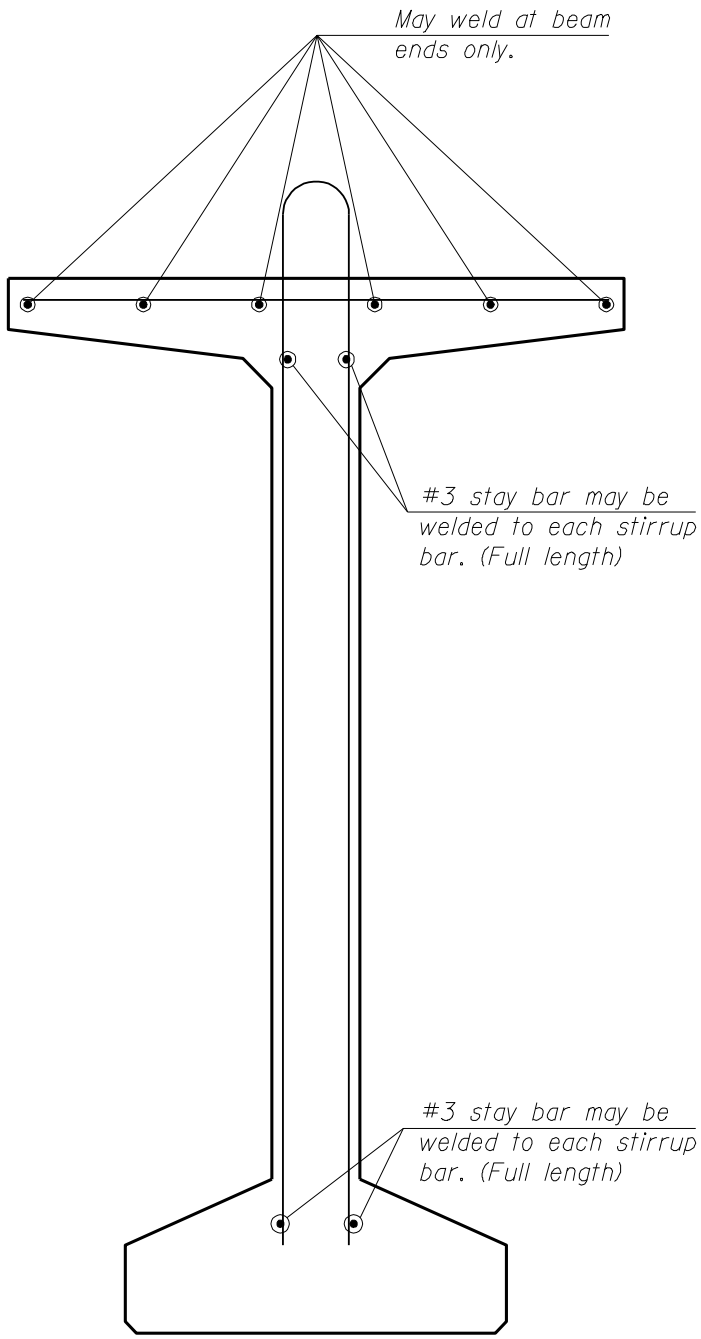

ACCEPTABLE WELDING LOCATIONS FOR BULB T-BEAM

This Page Intentionally Left Blank

Guidelines and General Information for Department Personnel During PCI Audits

The following is a list of guidelines and general information for Materials Engineers, Physical Test Engineers and Inspectors on what the general protocol and procedures are during a PCI audit:

1. Inspectors should inform their supervisor (Physical Test Engineer) immediately when a PCI Auditor comes to a Producer's plant unannounced. The Physical Test Engineer or Inspector should also inform the Central Bureau of Materials (Concrete Products Engineer and/or Engineer of Concrete and Soils). The Bureau of Materials may elect to be in attendance at a PCI Audit.

2. PCI Auditors will be conducting their audits as per normal procedures, but they will also be looking at completed IDOT Forms PS02 and PS03 as well as the completed IDOT PS02 and PS03 Log Forms in the Producer's (and/or Inspector's) files as part of the process.

    i. PCI Auditors may or may not ask Department personnel questions about the information contained in the PS02, PS03 and log forms on file for clarification purposes, etc.
    ii. It is also permitted for Department personnel to offer unsolicited clarifications about what is described on PS02, PS03 and log forms on file.
    iii. PCI understands that what is written on these forms may or may not be the best representation of a particular situation or series of events.

3. In the past, Department personnel may have had little to no interaction with PCI Auditors during the course of their work. However, note that some interaction with PCI Auditors is permitted, but it is also important to keep in mind that the Auditor typically has a lot of work to do in a short period of time. PCI Auditors have been instructed to talk with the Inspector, preferably at the beginning of the audit.

4. Department personnel are permitted (and it is encouraged) to attend audit "close-out" meetings. However, attendance should only be for discussions that pertain to PCI B3-IL and PCI B4-IL Certification. PCI B3 is the designation for products with non-draped or straight strands (deck beams) and B4 is for products with draped and non-draped strands (deck beams, I-beams, Bulb T-beams, and IL-beams). The IL designation indicates "State-Specific Bridge Group" PCI Certification for a Producer who fabricates beams for the Department.

5. PCI will make the findings of PCI Audits related to PCI B3-IL and PCI B4-IL Certification available to the Department. This includes the total grade for each division and the overall total grade given to a Producer by a PCI Auditor. Note that previously PCI Audit findings were kept confidential.

This Page Intentionally Left Blank

APPENDIX B

ILLINOIS TEST PROCEDURE 320[1]

MATCH CURING OF CONCRETE TEST SPECIMENS

Effective Date: March 3, 2015

1. SCOPE

1.1. This recommended practice covers procedures for making and curing cylindrical concrete specimens at the same temperature as that measured in a concrete member. This test method, developed by the Illinois Department of Transportation, is based on AASHTO PP 54-06 with revisions recommended by ICT project R27-98, "Evaluation of Concrete Cylinder Match Curing & Evaluation of 4" by 8" Cylinders."

1.2. The concrete sample used to make the specimens shall be taken from the concrete being placed in the same member where the temperature is to be measured.

1.3. The values stated in SI units are to be regarded as the standard.

1.4. *This standard does not purport to address all of the safety concerns, if any, associated with its use. It is the responsibility of the user of this standard to establish appropriate safety and health practices and determine the applicability of regulatory limitations prior to use.*

2. REFERENCED DOCUMENTS

2.1. *Illinois Modified Standards*:

- AASHTO M 205M/M 205, Molds for Forming Concrete Test Cylinders Vertically
- AASHTO R 60, Sampling Freshly Mixed Concrete
- AASHTO T 22, Compressive Strength of Cylindrical Concrete Specimens
- AASHTO T 23, Making and Curing Concrete Test Specimens in the Field
- AASHTO T 119M/T 119, Slump of Hydraulic Cement Concrete
- AASHTO T 152, Air Content of Freshly Mixed Concrete by the Pressure Method
- AASHTO T 196M/T 196, Air Content of Freshly Mixed Concrete by the Volumetric Method
- ASTM C 1064/C 1064M, Standard Test Method for Temperature of Freshly Mixed Hydraulic-Cement Concrete

2.2. *ASTM Standards*:

- C 125, Standard Terminology Relating to Concrete and Concrete Aggregates

3. TERMINOLOGY

3.1. For definitions of terms used in this practice, refer to ASTM C 125.

4. SIGNIFICANCE AND USE

4.1. This method provides a procedure for curing concrete cylinders at the same temperature as that monitored at a specific location in a concrete member. Consequently, the compressive strength of the cylinder more accurately represents the in-place concrete strength of the member. The method is particularly useful for determining the concrete compressive strength at early ages in the fabrication of precast concrete members or for determining the compressive strength of concrete at a critical location in a structural member.

5. APPARATUS

5.1. The apparatus shall consist of a monitoring and heating system capable of maintaining concrete cylinders at a temperature within a specified tolerance (Section 5.3) of the temperature of the concrete at a specific location in the member. Three systems for heating concrete cylinders are acceptable: insulated jacket mold, air chamber, and water bath (Note 1).

Note 1—A match curing system that only provides heat to the cylinder and cannot cool it is acceptable, but the temperature tolerances stated in Section 5.3 shall apply. The purchaser is advised that the temperature of the cylinder may exceed that of the member if the temperature of the member decreases at a greater rate than that of the cylinder. Therefore, better temperature control is obtained when the cylinders (i.e., match curing system) are stored in an environment that is cooler than the temperature of the concrete in the member. This reduces the risk for exceeding the maximum temperature tolerance specified in Section 5.3.

5.1.1. *Insulated Jacket Mold System*—This system consists of a temperature sensor in the member, a controller, and insulated cylinder molds with built-in thermocouple and heating system. One separate temperature verification cylinder with a thermocouple located per Section 5.2 is recommended to verify an insulated cylinder mold system is working properly.

5.1.2. *Air Chamber System*—This system consists of a temperature sensor in the member, a controller, thermocouples, and heater. For the air chamber, one thermocouple is located in a temperature verification cylinder placed in the air chamber, and another thermocouple is used to measure air temperature in the chamber.

5.1.3. *Water Bath System*—This system consists of a temperature sensor in the member, a controller, thermocouples, heater, and water circulator. For the water bath, one thermocouple is located in a temperature verification cylinder that is placed in the water, and another thermocouple is used to measure water temperature. It shall also be noted that the water level shall not submerge, and shall not be more than 6 mm (0.25 in.) below the top surface of, the cylinders. A lid shall be placed over the entire system. The initial water temperature of the water bath shall be within the temperature range specified in Section 5.3.

5.2. *Temperature Sensors*—For a member, temperature sensors shall be placed at the most critical locations for strength development. The purchaser shall determine the critical locations for temperature sensors in each type of member

and show the locations on the project drawings or the contractor shall submit drawings showing proposed locations to the purchaser for approval. For a temperature verification cylinder, the sensor shall be located in the center and at mid-height of the specimen.

5.2.1. Temperature sensor wire shall be durable enough to withstand the wear associated with construction operations and shall have a size of 20 awg or larger in diameter (Note 2).
Note 2—In locations where electrical interference may affect the measured data, shielded wire should be used.

5.3. *Controller*—The controller shall be capable of monitoring and recording the temperatures of the member and cylinders with an embedded or adjoining thermocouple, and controlling the heating system. For the insulated jacket mold system, the cylinder temperature shall be within ±2°C (±4°F) of the temperature measured in the member. For an air chamber or a water bath, the system shall maintain the cylinder temperature within +2°C (+4°F) to -3°C (-6°F) of the temperature measured in the member. Proper operation of the system shall be verified on a regular basis in accordance with the manufacturer's recommendations.

5.4. *Cylinder Molds*:

5.4.1. Cylinder molds or insulated cylinder molds shall conform to the requirements of M 205M/M 205. Refer to Section 7.5.1.

5.4.2. Cylinder molds shall have inside dimensions of 100 by 200 mm (4 by 8 in.) or 150 by 300 mm (6 by 12 in.).

5.5. *Air Chamber or Water Bath*:

5.5.1. *Dimensions*—The dimensions of the constructed air chamber or water bath shall accommodate cylinders placed a minimum of one-cylinder diameter apart from each other, and a minimum of one-cylinder diameter away from any vertical wall of the chamber or bath.

5.5.2. *Material*—An air chamber constructed of wood or other material is acceptable. A water bath constructed of polypropylene or other impermeable material is acceptable.

6. TEST SPECIMENS

6.1. Test specimens shall be cylinders of concrete cast and hardened in an upright position, with a length equal to twice the diameter. When the nominal maximum size of coarse aggregate does not exceed 50 mm (2 in.), the cylinder may be 150 by 300 mm (6 by 12 in.). When the nominal maximum size of coarse aggregate does not exceed 25 mm (1 in.), the cylinder may be 100 by 200 mm (4 by 8 in.).

6.2. A minimum of two 150- by 300-mm (6- by 12-in.) or three 100- by 200-mm (4- by 8-in.) cylinders shall be made for each strength test when the specified strength does not exceed 34 MPa (5000 psi). A minimum of three cylinders shall be made for each strength test when the specified strength exceeds 34 MPa (5000 psi).

Temperature verification cylinder specimens with an embedded thermocouple shall not be tested for strength.

7. PROCEDURE

7.1. *System Installation*—Prior to concrete placement, the temperature sensors in the member shall be securely fixed at the specified locations. The sensor tips shall be installed such that they do not have direct contact with steel reinforcement. Prior to concrete placement, proper operation of the match-curing system shall be verified in accordance with the manufacturer's recommendations.

7.2. *Sampling Concrete*—The samples used to fabricate test specimens under this standard shall be obtained in accordance with R 60 unless an alternative procedure has been approved. The concrete sample shall be taken from concrete placed as close as practical to the temperature sensor in the member.

7.3. *Slump, Air Content, and Temperature*:

7.3.1. *Slump*—Measure and record the slump of each batch of concrete from which specimens are made, immediately after remixing in the receptacle as required by T 119M/T 119.

7.3.2. *Air Content*—Determine and record the air content in accordance with either T 152 or T 196M/T 196. The concrete used in performing the air content test shall not be used in fabricating test specimens.

7.3.3. *Temperature*—Determine and record the concrete temperature in accordance with ASTM C 1064/C 1064M.

7.4. *Molding Specimens*—Specimens shall be molded using the procedures of T 23. For temperature verification cylinder specimens, care shall be taken to locate the thermocouple as specified in Section 5.2.

7.5. *Match Curing*:

7.5.1. *Covering after Finishing*—Immediately after finishing, precautions shall be taken to prevent evaporation and loss of water from the specimens. Cover specimens with a nonabsorbent, nonreactive plate or lid, or a sheet of impervious plastic.

7.5.2. *Specimen Storage*—During match curing, all specimens shall be shielded from direct rays of the sun, other heating devices, rain, and wind. All specimens controlled by the same controller shall be stored together. Refer also to Note 1.

7.5.3. Match cure for the specified length of time.

7.5.4. Following the match-curing period, the cylinders shall be removed from the molds and subsequently stored in a similar temperature and moisture environment as the member unless stated otherwise in the project specifications.

7.5.5. When match-cured cylinders are used to determine concrete release strengths, it is recommended that match curing be continued for as long as possible and until the cylinders are stripped for testing.

7.6. *Strength*—Strength testing of specimens shall be according to T 22.

8. REPORT

8.1. *The report shall include the following*:

8.1.1. All information required by T 22 and T 23;

8.1.2. The method of match curing;

8.1.3. The duration of match curing;

8.1.4. Tables or graphs showing the temperature with time for the member, and for cylinders with an inserted or adjoining thermocouple. For air chambers, the air temperature shall also be reported. For water baths, the water temperature shall also be reported.

This Page Intentionally Left Blank

APPENDIX C

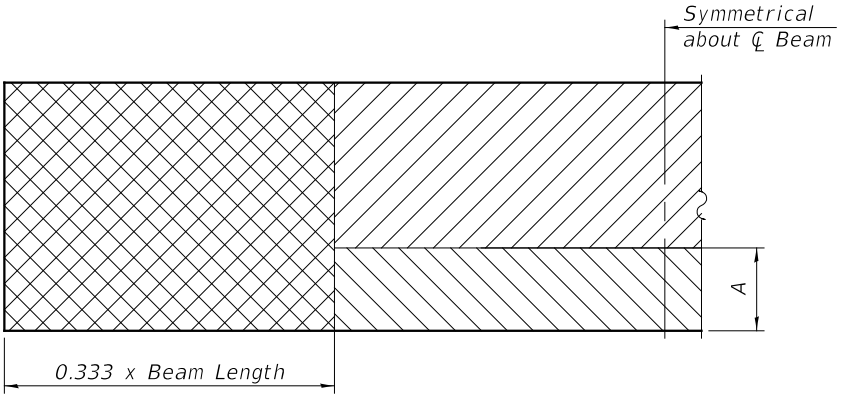

ELEVATION OF PRESTRESSED BEAM PATCH REPAIR AREAS

Beam Depth (I; Bulb T; IL) (inches)	A (inches)
27	9
36	12
42	14
45	15
48	16
54	18
63	24
72	28

Beam Depth (Deck Beam) (inches)	A (inches)
11	4
17	6
21	7
27	9
33	11
42	14

Concrete patches in this area require no preload; however, an additional FRP patch is required over the repair.

Concrete patches in this area require a preload only.

Concrete patches in this area do not require a preload or an FRP patch.

SECTION 3.5.3 AND 3.5.6
PATCH REPAIR AREAS

This Page Intentionally Left Blank

APPENDIX D

SMALL-SCALE FIBER WRAP PATCHING FOR PRECAST-PRESTRESSED PRODUCTS

Effective: April 1, 2020

Description

This work shall consist of furnishing and installing fiber-reinforced polymer (FRP) wrap patches at the locations specified in the remedy plan.

Submittals

The following submittals shall be required of the FRP system manufacturer and shall be submitted along with the proposed remedy plan to the Inspector for review.

Submittals required of the FRP system manufacturer:

- Product information and data sheets indicating physical, mechanical, and chemical properties and limitations of the FRP system and all its components.
- Net fiber and gross laminate tensile properties of the FRP system, including all test methods and calculations used for determining properties. FRP Reinforcement shall meet the cured composite property requirements as follows.

Property Prior to testing, laminate samples shall be cured at least 7 days at 70 °F then post-cured at 140°F for 48 hours.	**Glass Fiber**	**Carbon Fiber**	**ASTM Test Method**
Tensile Strength, minimum	56 ksi (390 MPa)	97 ksi (670 MPa)	D3039
Tensile Modulus, minimum	3300 ksi (22750 MPa)	8200 ksi (56540 MPa)	D3039
Elongation at Break, minimum	1.7%	0.9%	D3039
Thickness per Layer, nominal	0.04 in. (1 mm)	0.02 in. (0.5 mm)	

- Installation and maintenance instructions for each material used in the FRP system. Surface preparation requirements shall be included in the installation instructions.
- Documentation from the FRP system manufacturer stating the installer has been trained to install the FRP system shown on the remedy plan.
- Safety Data Sheets for each product used.

Material Requirements

All products shall be delivered to the jobsite in their original, unopened containers with the FRP system manufacturer's name, labels, product identification, and batch numbers.

FRP shall be high-strength, high-modulus fiber fabric of the type, size, layer, materials, tension, spacing and locations as specified in the remedy plan. The FRP fabric shall be free of visual defects according to ASTM D 2653, Acceptance Level I.

Fabric saturant (saturating resin) and concrete primer shall be two-component high-strength, high-modulus epoxy with 100% solids and tolerant to moisture. Manufacturer's

recommendations for mixing shall be followed. Components of saturating resin may be proportioned; however, provision shall be made for checking the accuracy of proportions and mixing. Dilution of components will not be permitted. Mixtures shall be used within its pot life.

A vapor-permeable, UV-resistant polymer- or acrylic-based coating shall be used and shall be applied according to the manufacturer's recommendations.

Construction Requirements

Surface preparation and installation of FRP wraps shall be done in the Inspector's presence and according to the manufacturer's recommendations and the following.

a. Surface Preparation. FRP wraps shall be placed on sound concrete having a maximum moisture content of 4 percent, unless bond testing shows no detrimental effect if installed at higher moisture contents. All other concrete repairs and/or modifications shall be completed prior to performing this work.

   All concrete surface irregularities less than 1 in. (25 mm) shall be ground smooth and/or filled with an approved repair mortar. Surface irregularities greater than 1 in. (25 mm) and removed deteriorated concrete shall be repaired using a R1, R2, or R3 mortar from the Department's qualified product list of Packaged, Dry, Rapid Hardening, Cementitious Materials for Concrete Repairs. All sharp edges shall be ground smooth and flush. All repairs shall be completed in such a manner as to not damage the existing structure.

   All bond-inhibiting and foreign materials, including but not limited to dust, laitance, paint, grease, curing compounds, impregnations and waxes, shall be removed from the concrete surface by blast cleaning or equivalent mechanical means, followed by air blasting and vacuuming to a dust-free condition.

   When wrapping FRP around exterior corners of rectangular cross sections, the corners should be rounded to a minimum of ½" radius. Interior corners shall be smoothed by troweling epoxy mortar into the corners.

b. Constituent Material Application. All materials shall be applied according to conditions (i.e., concrete surface temperature, air temperature, relative humidity, dew point) recommended by the FRP manufacturer.

   Unless otherwise recommended by the manufacturer, the saturating resin shall be applied as a surface primer. The primer shall be applied uniformly on the prepared surface to all areas of concrete receiving the FRP wrap according to the manufacturer's instructions. Primed surfaces shall be protected from contaminants (e.g., dust, moisture, etc.) prior to the application of the FRP wrap.

   The resin-to-fabric ratio shall be according to the manufacturer's specifications. FRP-ply orientation shall not deviate from that shown on the remedy plan. Fiber wraps shall be handled in a manner to maintain fiber straightness and prevent fiber damage. Any kinks, folds, or severe waviness shall be reported to the Inspector. If multiple fabric layers are being placed, successive layers shall be placed before the complete curing of the previous layer to ensure complete bonding between layers. Entrapped air beneath each layer of fabric shall be rolled out before the saturating resin sets.

c. Weather Limitations. Subject to approval by the Inspector, the Producer may provide suitable enclosures to permit application and curing of the FRP wrap during inclement weather. Provisions shall be made to control atmospheric conditions artificially within the enclosures to meet the manufacturer's specified limits for application and curing of the FRP wrap.

   The FRP system shall be protected from rain, sand, dust, and other foreign particles during and after curing as per the Engineer and manufacturer's recommendations.

d. Inspection and Defects. The Inspector shall inspect the cured FRP system to ensure saturating resin has completely cured. The Inspector shall check for defects including, but not limited to: voids, delaminations, external cracks, chips, cuts, loose fibers, external abrasions, blemishes, foreign inclusions, depressible raised areas, or fabric wrinkles. All defects with a dimension greater than 1 1/2 in. (40 mm), or an area greater than 1 sq in. (645 sq mm), or defects with any dimension greater than 1 in. (25 mm) within 12 in. (300 mm) from another defect area of similar size, shall be repaired or replaced as determined by the Engineer. Repairs shall be made according to manufacturer's recommendations and as specified by the Engineer.

e. Protection. Two applications of a vapor-permeable, UV-resistant polymer- or acrylic-based coating shall be applied to all exposed surfaces of the FRP wrap. The coating shall be compatible with the FRP system and applied according to the manufacturer's recommendations. Any solvents used to clean the FRP surface prior to coating application shall be approved by the FRP manufacturer.

This Page Intentionally Left Blank

APPENDIX E

Illinois Department of Transportation
Memorandum

To:	Regional Engineers	Attn: PI & PD Engineers
From:	D. Carl Puzey	
Subject:	Shop Drawing Procedures	
Date:	October 16, 2019	

This memorandum details instructions for state projects requiring fabrication shop drawing review by either a Consultant or the Bureau of Bridges and Structures (BBS), updated submittal and distribution flowcharts (Attachment A), and instructions for electronic submittal of fabrication shop plans. This memorandum supersedes the previous memo dated January 9, 2017.

Other structure related submittals shall be submitted to the BBS Consultant Bridge Design & Construction Unit (BBS Design Unit) or as otherwise directed. Local projects may require different submittal routings, so the local public agency should be contacted for guidance.

For each construction contract, a Fabrication Shop Drawing Submittal Information Sheet (Attachment B) shall be completed by the Resident Engineer and submitted to BBS. This list of project contacts is critical for the delivery of electronic shop drawings.

Shop drawings shall be submitted electronically to DOT.Bridge.ShopDrawings@illinois.gov as Adobe (.pdf) documents that are proportioned and prepared so that they will print at the required paper copy size without manipulation. Shop drawings with multiple pages shall be submitted as a single (.pdf) file for each structure. Files larger than 20 megabytes shall be split into multiple files and submitted via multiple emails. All submittals shall include a transmittal cover sheet identifying the submitted items and pertinent project information. Paper submittals will continue to be accepted until July 1, 2020, after which all shop drawings shall be submitted electronically.

Existing projects that have already had paper shop drawings submitted shall be completed as paper submission projects.

If shop drawings are received prior to submittal of the Fabrication Shop Drawing Submittal Information Sheet, those drawings will be processed as paper copies and will be sent back via mail following the previous Shop Drawing Procedures from the Memorandum dated January 9, 2017 (Attachment C).

The Prime Contractor (PC) is responsible for shop drawing accuracy and for the fabrication satisfying contract requirements. The PC's authority may be delegated to fabricators, detailers, or other subcontractors.

Regional Engineers / Attn: PI & PD Engineers
Shop Drawing Procedures
Page 2
October 16, 2019

The PC shall provide field verifications and coordinate activities of subcontractors, including accepting any subcontractor-proposed modifications to the contract, before shop drawings are submitted to the Engineer for review.

All drawings shall be completely titled according to the contract plans, including structure number, state contract number, route, section, county, and shall pertain to one structure only. Fabricator contact information shall be provided on every sheet. If a fabricator has multiple fabrication shop locations, provide the address of the shop performing the fabrication on each shop drawing for inspection assignment. A blank 2" by 2" space shall be left in the same place on every sheet for this office's approval stamp.

Please provide these instructions and flowcharts to Consultants during preliminary man-hour negotiations and to Contractors at pre-construction meetings.

If there are any questions concerning these guidelines, or shop drawing processes in general, please contact the BBS Shop Drawings & Steel Fabrication Unit at (217) 782-3586.

Attachments

TLK/kktshopdrawingprocedures-20191016
cc: All Fabricators
Tim Kell
Brian Pfeifer
Bureau of Local Roads & Streets
Paul Loete

Illinois Department of Transportation
Shop Drawing Requirements

A. Reviewed and approved shop drawings <u>are required</u> for the following items and shall be processed as noted:

Plate Girders
Wide Flange Beams
Miscellaneous Structural Steel
PPC Bulb-T Beams
PPC I-Beams
PPC IL-Beams
PPC Deck Beams
Precast Concrete Box Culverts
Three Sided Precast Concrete Structures
Precast Deck Panels
Cantilever Sign Structures
Metal Deck Forms
Mechanically Stabilized Earth Walls
Precast Noise Walls
Prefabricated Pedestrian/Bicycle Trusses
High Mast Light Towers
Finger Plate Expansion Joints
Finger Plate Joint Trough
Modular Expansion Joints
Elastomeric Bearings
HLMR Bearings
Seismic Isolation Bearings
Fixed Bearings
Anchor Bolts
Pins and/or Link Plates
Overhead Sign Structures
Precast Fascia Panels
Butterfly Sign Structures
Bridge Mounted Sign Structures
Monotube Sign Structures
Traffic Signal Mast Arms

Other project-specific items not included in this list may also require approved shop drawings.

<u>Special Requirement Items</u>

If required by the contract, the seal and signature of an Illinois licensed Professional Engineer or Structural Engineer shall be affixed. The routing of supplier-prepared shop drawings (and computations if applicable) follows the attached review procedure diagrams, except as modified below. Districts should archive drawings, especially those not kept by the Bureau of Bridges and Structures (BBS).

When a consultant reviews the shop drawing for approval, the consultant's approval may be indicated by "No Exceptions Taken", "Acceptable as Submitted", etc. as stamped on each sheet.

The Prime Contractor (PC) is responsible for the design and detailing of the following ten items.

1. Mechanically Stabilized Earth (MSE) Retaining Wall

   Design computations and shop drawings shall be submitted to the BBS Consultant Bridge Design & Construction Review Unit <u>(BBS Design Unit*)</u> and reviewed by the BBS Foundations and Geotechnical Unit, even if the shop drawings have been reviewed by a consultant. Shop Drawings and computations require an IL SE Seal (Reference: IDOT Standard Spec 522.09). After all review comments have been resolved, the BBS Design Unit will request distribution drawings with their approval letter. The BBS will archive shop drawings only for MSE walls that are part of bridge structures.

2. Precast Concrete Box Culverts

   When required (Reference: Central Bureau of Materials (CBM) Policy Memorandum 19-08 to determine requirements) shop drawings shall be submitted directly to the BBS Shop Drawings & Steel Fabrication Unit <u>(BBS Fabrication Unit*)</u> for review. A Welded

Wire Reinforcement schematic detailing wire sizes, spacings and lengths shall be provided for BBS use. An additional copy shall be simultaneously submitted to the District Project Implementation Engineer. After all review comments have been resolved, BBS shall distribute shop drawings for Precast Concrete Box Culverts reviewed by this office. An electronic copy of all Precast Concrete Box Culvert shop drawings approved by the Districts, local public agencies or their consultants shall be forwarded to DOT.Bridge.ShopDrawings.PCBC@Illinois.gov for this office's records and use (Reference: CBM Policy Memo 19-08 or Bureau of Local Roads Manual).

3. Three Sided Concrete Structures

Design computations, load rating, and shop drawings shall be submitted to the BBS Design Unit* for review. Drawings, load rating, and computations require an IL SE Seal. The contact information for the fabricator precasting the structure and the technology owner, as applicable, shall be included on the shop drawings (Reference: contract special provision or GBSP 15). After all review comments have been resolved, the BBS Design Unit will request distribution drawings with their approval letter. BBS shall distribute shop drawings for Three Sided Concrete Structures reviewed by this office.

4. Seismic Isolation Bearing

Design details and computations shall be submitted to the BBS Design Unit* or the design consultant, prior to the review of shop drawings. Shop drawings will not be accepted for review before the proposed designs are approved (Reference: contract special provision). The BBS will archive shop drawings. After all review comments have been resolved, the BBS Design Unit will request distribution drawings with their approval letter. BBS shall distribute shop drawings for Seismic Isolation Bearings reviewed by this office.

5. Pedestrian/Bicycle Truss

Shop drawings and design computations for structures crossing over a state or federal route, placed on IDOT right-of-way, or having spans 150 ft. or longer, shall be submitted to the BBS Design Unit* for structural review. Shop drawings and computations require an IL SE Seal. If these structures are constructed by another governmental agency (county, municipality, park district, IL Dept. of Natural Resources, etc.) that agency is responsible for archiving the approved shop drawings for future reference (Reference: contract special provision or GBSP 33). After all review comments have been resolved, the BBS Design Unit will request distribution drawings with their approval letter. BBS shall distribute shop drawings for Pedestrian/Bicycle Trusses reviewed by this office.

6. Precast Noise Wall

Shop drawings and design computations shall be submitted to the BBS Design Unit* for review and an additional copy simultaneously submitted to the District Project Implementation Engineer. Shop drawings and computations require an IL SE Seal (Reference: contract special provision). The BBS will archive shop drawings only for the portions of noise walls that are installed on bridges. After all review comments have been resolved, the BBS Design Unit will request distribution drawings with their approval letter. BBS shall distribute shop drawings for Precast Noise Walls reviewed by this office.

7. "Stay in Place" Metal Deck Forms

   Design calculations and shop drawings shall be submitted to the BBS Design Unit*. Shop drawings and computations require an IL SE Seal (Reference: contract special provision). The drawings will be reviewed by the BBS Fabrication Unit and BBS will archive the shop drawings. After all review comments have been resolved, the BBS Design Unit will request distribution drawings with their approval letter. BBS shall distribute shop drawings for "Stay in Place" Metal Deck Forms reviewed by this office.

8. Traffic Signal Mast Arm

   Shop drawings from various manufacturers have been pre-approved by this office for specified loading configurations shown on IDOT Highway Standards. The pre-approved shop drawings have been distributed to all District Project Implementation Engineers and may be used by construction personnel to accept shop drawings for loading conditions less than or equal to those that were pre-approved. Contact the BBS Fabrication Unit to receive a copy of the most current pre-approved drawings. For lengths or loadings that exceed pre-approved configurations, shop drawings, along with the contract signal plans, shall be submitted to the BBS Fabrication Unit* for review. Monotube Sign Structure shop drawings from manufacturers have not been pre-approved by this office and must be submitted to the BBS Fabrication Unit for review. The BBS will not archive final drawing records.

9. High Mast Light Tower

   Shop drawings are to be sent to the Central Bureau of Design and Environment for towers in Districts 2 through 9, and to the District 1 Bureau of Electrical Operations for towers in District 1. Luminaires, lowering devices and all electrical and mechanical components will be reviewed by those offices. Tower shop drawings and weld procedures are reviewed by the BBS Fabrication Unit for structural details and specification conformance. The BBS will not archive final drawing records.

10. Shop Drawing review by the Railroad Engineer

    Shop drawings for structures that will carry railroad traffic shall also be submitted for the approval of the Railroad Engineer prior to distribution by BBS. (Reference: IDOT Standard Spec 505.03). Revisions required by the Railroad Engineer shall be sent to BBS as revised sheets for review. After all review comments have been resolved, BBS shall distribute shop drawings for structures that will carry railroad traffic.

B. Shop Drawings for the following items need not be submitted for each project to the BBS or the review consultant, unless specified or special (non-standard) details are proposed for routine items:

1. Metal Railings for Bridges (Steel and Aluminum), Pedestrian/Bicycle Railing, Prefabricated Inspection Platforms, Miscellaneous Items – Scuppers, Drain Piping, Navigation Lights and Mounting Hardware, Light Poles, Traffic Signal Poles and other small fabricated pieces such as embedded items for precast and prestressed concrete

   The fabricator shall furnish installation and detail drawings to the Contractor and Resident Engineer for field verification of locations and dimensions. These drawings shall be included in the project records. Shop fabrication inspection is not required, and the Resident Engineer's final acceptance may be based on proper fit and an overall visual inspection of the finished product. IDOT Standard Spec. 1006.34(b)

requires all permanent tubular steel rail to have Charpy V-Notch (CVN) toughness values certified by testing. Test results, along with mill certification documentation, shall be submitted to the District. When noted on the plans, CVN testing may be waived/omitted for certain Bicycle/Pedestrian railings. All steel shall be domestic. Any paint used shall be accepted by (CBM)*. Current requirements of the CBM concerning aluminum rail and posts shall be satisfied.

The manufacturer's maintenance instructions (periodic inspection checklists, lubrication schedules, etc.) for moveable, prefabricated inspection platforms shall be furnished to the Resident Engineer.

2. Neoprene Expansion Joints

Each manufacturer should submit their standards to the BBS Fabrication Unit* for pre-approval, thereby eliminating shop drawing review by IDOT on individual projects. The Contractor retains the responsibility for proper fit, installation and geometry, and must supply a copy of a pre-approved standard to the Resident Engineer for field verification and inclusion in record drawings for the project. The BBS will not archive final drawing records.

For special, non-standard installations such as island medians, skew changes or partial replacements of dissimilar joints, shop drawings shall be submitted to the BBS Fabrication Unit.

The CBM will continue to receive material samples for lot testing.

3. Bridge Joint Sealing System (Preformed Joint Seal (PJS) or Strip Seal)

These joints' support plates are relatively simple and may be prefabricated in convenient lengths, allowing subsequent shop or field cutting to meet project requirements. Since details will be generic, no project-specific review is required, but fabricators may submit standard drawings for BBS pre-approval. An installation scheme should be provided by the fabricator to the Contractor and Resident Engineer on jobs with complex geometry or multiple changes in cross slope.

When fabricators are producing steel assemblies, the BBS Fabrication Unit shall be notified and may verify the following: domestic material of proper grade; acceptable welding with approved procedures by qualified welders; adequate blast cleaning before painting; and proper application of an approved primer. Only one coat of primer (or optional hot-dip galvanizing) is needed and studs do not require paint.

Acceptance will be waived to the Resident Engineer at the jobsite, unless an IDOT fabrication inspector is in the shop for other work and completes a BBS 59 release which includes the PJS or strip seal plates. The CBM will continue to lot test samples of the seal material.

4. Break-Away Wide Flange and Tubular Sign Posts

Standard shop drawings from various fabricators have been pre-approved by the BBS and distributed to all District Project Implementation Engineers and may be used by District Personnel to accept shop drawings. The Contractor retains the responsibility for proper fit, installation and geometry, and shall supply a copy of a pre-approved standard to the Resident Engineer for field verification and inclusion in record drawings for the project. The BBS will not archive final drawing records.

5. Fabric Reinforced Elastomeric Mats and Terminal Joint Wide Flange Beams

   The fabricator shall furnish installation and detail drawings to the Contractor and Resident Engineer for field verification of locations and dimensions. These drawings shall be included in the project records. Shop fabrication inspection is not required, and the Resident Engineer's final acceptance may be based on proper fit and an overall visual inspection of the finished product. The mat supplier is responsible for submitting samples to the CBM for lot testing.

*Reference Addresses:

Bureau of Bridges & Structures
2300 South Dirksen Parkway
Springfield, IL 62764

Choose the applicable attention person within BBS:
Attn: Engineer of Bridge Design / Consultant Bridge Design and Construction Review Unit
Attn: Engineer of Bridge Design / Shop Drawings & Steel Fabrication Unit
Attn: Engineer of Structural Services / Bridge Investigations and Repair Plans Unit

Central Bureau of Materials
126 East Ash Street
Springfield, IL 62704-4766
Attn: Materials Testing Section

DOT.Bridge.ShopDrawings@Illinois.gov

DOT.Bridge.ShopDrawings.PCBC@Illinois.gov

Shop Drawing Review Procedure for Bur. Of Bridges and Structures as Primary Reviewer

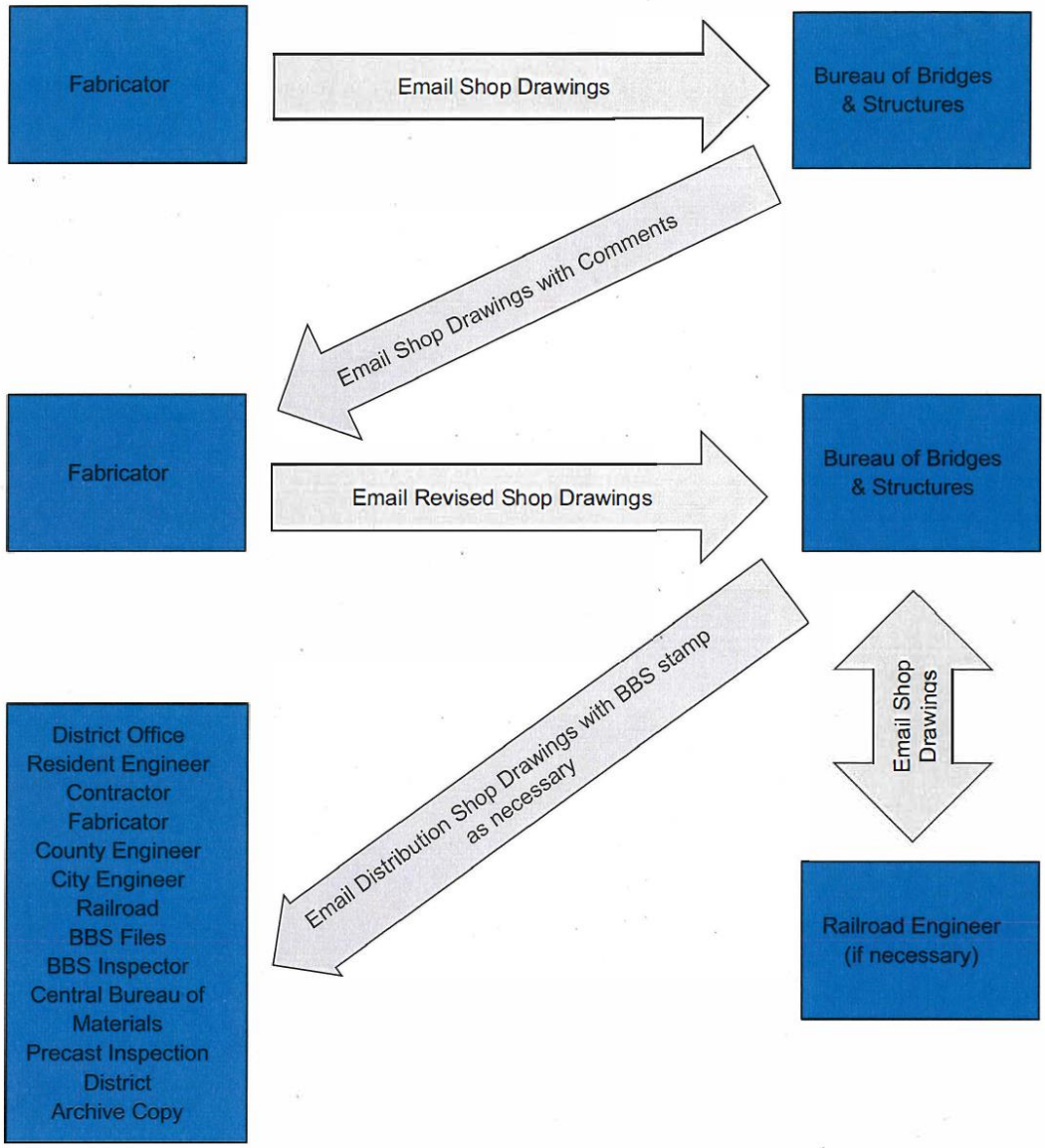

Attachment A
Shop Drawing Procedures Memorandum 10/16/2019

Page 6 of 7

Shop Drawing Review Procedure for Design Consultant as Primary Reviewer

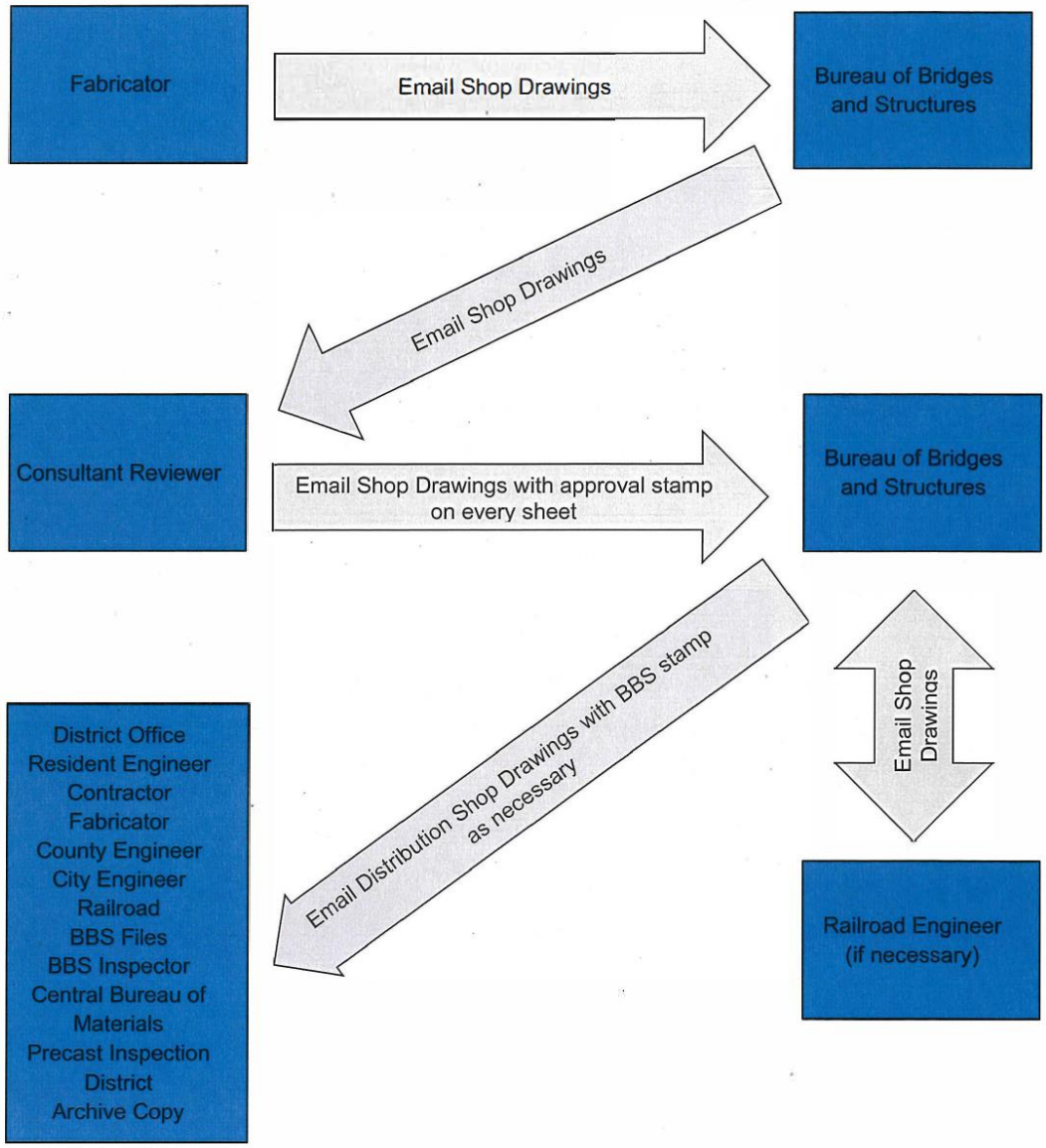

Attachment A
Shop Drawing Procedures Memorandum 10/16/2019

Page 7 of 7

Fabrication Shop Drawing Submittal Information Sheet

Resident Engineer: please provide the appropriate information requested for **each contract and structure combination**. (Not every project will require every item.)

The contact information that is provided will be the person contacted by the Bureau of Bridges and Structures with respect to structural Fabrication Shop Drawings for the contract and structure described.

This process is for structural fabrication shop drawings only. For other structure related submittals to BBS, please contact the BBS Design Unit.

If the Engineer of Record and the Shop Drawing Reviewer are the same person, only one name is necessary. Verify with the District's Project Engineer that the consultant agreement includes manhours for shop drawing review. If hours are not included for this, then note "BBS review of fabrication shop drawings."

Miscellaneous structural steel covers permanent bracing, side retainers, repair steel & bearing extensions.

Email the completed sheet to DOT.Bridge.ShopDrawings@illinois.gov

Fabrication Shop Drawing Submittal Information Sheet

Project Information

IDOT Contract No.		Structure No.	
Route		Section	
County		Job No.	

	Contact Name	Company Name	Email	Telephone
Resident Engineer				
Engineer of Record				
Shop Drawing Reviewer				
General Contractor				
Central Materials (Precast Inspector)				
District Materials (Precast Inspector)				
County Engineer				
City Engineer				
Railroad				
Railroad Engineer				
Day Labor				

Attachment B
Shop Drawing Procedures Memorandum 10/16/2019

Page 2 of 3

Fabrication Shop Drawing Submittal Information Sheet

Project Information

IDOT Contract No.		Structure No.	
Route		Section	
County		Job No.	

Pay Item	Contact Name	Company Name & City (City needed if multiple plants)	Email	Telephone
F&E Structural Steel Fabricator				
PPC Beam Fabricator				
Elastomeric Bearing Fabricator				
Misc. Structural Steel Fabricator				
HLMR Bearing Fabricator				
Finger Plate Joint Fabricator				
Modular Exp. Joint Fabricator				
Sign Structure Fabricator				
Pedestrian Truss Fabricator				
MSE Wall Fabricator				
Precast Conc. Box Culvert Fabricator				

Attachment B
Shop Drawing Procedures Memorandum 10/16/2019

Page 3 of 3

Illinois Department of Transportation

Memorandum

To:	Regional Engineers	Attn: Project Implementation and Program Development Engineers
From:	D. Carl Puzey	D. Carl Puzey
Subject:	Shop Drawing Procedures	
Date:	January 9, 2017	

Attached are instructions and updated submittal and distribution flowcharts for state projects requiring fabrication shop drawing review by either a Consultant or the Bureau of Bridges and Structures (BBS). Local projects may require different submittal routings, so the local public agency should be contacted for guidance.

The Prime Contractor (PC) is responsible for shop drawing accuracy and the fabrication satisfying contract requirements. Authority may be delegated to fabricators, detailers and other subcontractors. To avoid construction delays, the fabricator's detailer should send the drawings directly to the shop drawing reviewer, unless otherwise stipulated herein. To determine if the "designated reviewer" is the BBS or a Consultant, contact the BBS Shop Drawings and Fabrication Unit at 217-558-0285.

Routing unapproved shop drawings through the PC, other subcontractors, or the Resident Engineer, delays the review process and may result in the use of incorrect drawings for construction. However, the PC shall provide field verifications and coordinate activities of subcontractors, including accepting any subcontractor-proposed modifications to the contract, before shop drawings are submitted to the Engineer.

All drawings shall be completely titled according to the contract plans, including structure number, state contract number, route, section, county and shall pertain to only one structure.

Please provide these instructions and flowcharts to Consultants during preliminary man-hour negotiations and to Contractors at pre-construction meetings. If there are any questions concerning these guidelines, or shop drawing processes in general, please contact the Bureau of Bridges and Structures Fabrication Unit at (217) 782-3586.

Attachment

TLK/kktAREshopdrawingprocedures-20170109
cc: Priscilla Tobias
Paul Loete
Maureen Addis
Tim Kell
Brian Pfeifer
All Fabricators

Illinois Department of Transportation
Shop Drawing Requirements

A. Reviewed and approved shop drawings <u>are required</u> for the following items and shall be processed as noted:

Plate Girders
Wide Flange Beams
Miscellaneous Structural Steel
PPC Bulb-T Beams
PPC I-Beams
PPC IL-Beams
PPC Deck Beams
Precast Concrete Box Culverts
Three Sided Precast Concrete Structures
Overhead Sign Structures
Cantilever Sign Structures
Butterfly (Twin Cantilever) Sign Structures
Bridge Mounted Sign Structures
Monotube Sign Structures
Traffic Signal Mast Arms
High Mast Light Towers
Finger Plate Expansion Joints
Finger Plate Joint Trough
Modular Expansion Joints
Elastomeric Bearings
HLMR Bearings
Seismic Isolation Bearings
Fixed Bearings
Anchor Bolts
Pins and/or Link Plates
Precast Deck Planks
Precast Fascia Panels
Metal Deck Forms
Mechanically Stabilized Earth Walls
Precast Noise Walls
Prefabricated Pedestrian/Bicycle Trusses (see Item 4 below)

Other project-specific items not included in this list may also require approved shop drawings.

<u>Special Requirement Items:</u>

The Prime Contractor (PC) is responsible for the design and detailing of the following eight items. The seal and signature of an Illinois licensed Professional Engineer or Structural Engineer shall be affixed if required by the contract. The initial number and routing of supplier-prepared shop drawings (and computations if applicable) follows the attached review procedure diagrams, except as modified below. Districts should archive drawings, especially those not kept by the Bureau of Bridges & Structures (BBS).

1. <u>Mechanically Stabilized Earth Wall</u> (MSE) shop drawings and wall design computations require submittal to the BBS Bridge Design Section* and review by the BBS Geotechnical Unit, even if the shop drawings have been reviewed by a consultant. The BBS will archive shop drawings only for MSE walls that are part of bridge structures.

2. Precast Concrete Box Culverts, when required (reference BMPR Policy Memorandum 19-08), and Three Sided Precast Concrete Structures shop drawings shall be submitted directly to the BBS Fabrication Unit* for review, and two additional copies simultaneously submitted to the District Project Implementation Engineer. The District/owner shall archive shop drawings. BBS shall request distribution copies for Precast Concrete Box Culverts reviewed by this office. An electronic copy of all precast concrete box culvert shop drawings approved by the Districts, local public agencies or their consultants shall be forwarded to the BBS for this office's record and use as described in BMPR Policy Memorandum 19-08.

3. Seismic Isolation Bearing design details and computations shall be submitted to the BBS Bridge Design Section* or the design consultant, prior to the review of shop drawings. Shop drawings will not be accepted for review before the proposed designs are approved. The BBS will archive shop drawings.

4. Pedestrian/Bicycle Truss shop drawings and design computations for structures crossing over a state or federal route, or placed on an IDOT right-of-way, or having spans 150 ft. or longer, shall be submitted to the BBS Bridge Design Section* for structural review. If these structures are constructed by another governmental agency (county, municipality, park district, IL Dept. of Natural Resources, etc.), that agency is responsible for archiving the approved shop drawings for future reference.

5. Precast Noise Wall shop drawings shall be submitted directly to the BBS Bridge Design Section* for review and two additional copies simultaneously submitted to the District Project Implementation Engineer. The BBS will archive shop drawings only for the portions of noise walls that are installed on bridges.

6. "Stay-In-Place" Metal Deck Forms design calculations and shop drawings shall be submitted directly to the BBS Bridge Design Section*. The drawings will be reviewed by the BBS Fabrication Unit and BBS will archive the shop drawings.

7. Traffic Signal Mast Arm shop drawings from various manufacturers have been pre-approved by this office for specified loading configurations. The pre-approved shop drawings have been distributed to all District Project Implementation Engineers and may be used by construction personnel to accept shop drawings for loading conditions less than or equal to those that were pre-approved. For lengths or loadings that exceed pre-approved configurations, shop drawings, along with the contract signal plans, shall be submitted to the BBS Fabrication Unit* for review. Monotube Sign Structure shop drawings from manufacturers have not been pre-approved by this office, and must be submitted to the BBS Fabrication Unit* for review. The BBS will not archive final drawing records.

8. High Mast Light Tower shop drawings are to be sent to the central Bureau of Design and Environment for towers in Districts 2 through 9, and to the District 1 Bureau of Electrical Operations for towers in District 1. Luminaires, lowering devices and all electrical and mechanical components will be reviewed by those offices. Tower shop drawings and weld procedures are reviewed by the BBS Fabrication Unit* for structural details and specification conformance. The BBS will not archive final drawing records.

B. Shop Drawings for the following items <u>need not be submitted</u> for each project to the BBS or the review consultant, unless specified or special (non-standard) details are proposed for routine items:

Metal Railings for Bridges (Steel and Aluminum), Pedestrian/Bicycle Railing, Pre-Fabricated Inspection Platforms, Miscellaneous Items – Scuppers, Drain Piping, Navigation Lights and Mounting Hardware, Light Poles, Traffic Signal Poles and other small fabricated pieces such as embedded items for precast and pre-stressed concrete:

The fabricator shall furnish installation and detail drawings to the Contractor and Resident Engineer for field verification of locations and dimensions. These drawings shall be included in the project records. Shop fabrication inspection is not required, and the Resident Engineer's final acceptance may be based on proper fit and an overall visual inspection of the finished product.

The Standard Specification Article 1006.34(b) requires all permanent tubular steel rail to have Charpy-V Notch (CVN) toughness values certified by testing. Test results, along with mill certification documentation, shall be submitted to the district. When noted on the plans, CVN testing may be waived/omitted for certain Bicycle/Pedestrian railings. All steel shall be domestic. Any paint used shall be accepted by the Central Bureau of Materials (CBM)**. Current requirements of the CBM concerning aluminum rail and posts shall be satisfied.

The manufacturer's maintenance instructions (periodic inspection checklists, lubrication schedules, etc.) for moveable, pre-fabricated inspection platforms shall be furnished to the Resident Engineer.

Neoprene Expansion Joints:

Each manufacturer should submit their standards to the BBS Fabrication Unit* for preapproval, thereby eliminating shop drawing review by IDOT on individual projects. The Contractor retains the responsibility for proper fit, installation and geometry, and must supply a copy of a preapproved standard to the Resident Engineer for field verification and inclusion in record drawings for the project. The BBS will not archive final drawing records.

For special, non-standard installations such as island medians, skew changes or partial replacements of dissimilar joints, shop drawings should be submitted to the BBS Fabrication Unit*.

The CBM** will continue to receive material samples for lot testing.

Bridge Joint Sealing System (Preformed Joint Seal (PJS) or Strip Seal):

These joints' support plates are relatively simple and may be prefabricated in convenient lengths, allowing subsequent shop or field cutting to meet project requirements. Since details will be generic, no project-specific review is required, but fabricators may submit standard drawings for BBS preapproval. An installation scheme should be provided by the fabricator to the Contractor and Resident Engineer on jobs with complex geometry or multiple changes in cross slope.

When fabricators are producing the steel assemblies, the BBS Fabrication Unit * is to be notified and may verify the following: domestic material of proper grade; acceptable welding with approved procedures by qualified welders; adequate blast cleaning before painting; and proper application of an approved primer. Only one coat of primer (or optional hot-dip galvanizing) is needed and studs do not require paint.

Acceptance will be waived to the Resident Engineer at the jobsite, unless one of our fabrication inspectors is in the shop for other work and completes a BBS 59 release which includes the PJS or strip seal plates. The CBM** will continue to lot test samples of the seal material.

Break-Away Wide Flange and Tubular Sign Posts:

Standard shop drawings from various fabricators have been pre-approved by the BBS and distributed to all District Project Implementation Engineers, and may be used by District personnel to accept shop drawings. The Contractor retains the responsibility for proper fit, installation and geometry, and must supply a copy of a preapproved standard to the Resident Engineer for field verification and inclusion in record drawings for the project. The BBS will not archive final drawing records.

Fabric Reinforced Elastomeric Mats and Terminal Joint Wide Flange Beams:

The fabricator shall furnish installation and detail drawings to the Contractor and Resident Engineer for field verification of locations and dimensions. These drawings shall be included in the project records. Shop fabrication inspection is not required, and the Resident Engineer's final acceptance may be based on proper fit and an overall visual inspection of the finished product. The mat supplier is responsible for submitting samples to the CBM** for lot testing.

* ILDOT Bureau of Bridges & Structures, Rm. 240,
2300 S. Dirksen Pkwy, Springfield, IL 62764:
Bridge Design Section, Fabrication Unit, or
Bridge Investigations and Repair Plans Unit, as applicable.

** ILDOT Bureau of Materials
126 East Ash, Springfield, IL 62704
Materials Testing Section

Shop Drawing Review Procedure for Bur. of Bridges & Structures as Primary Reviewer

("Special Requirements" not included)

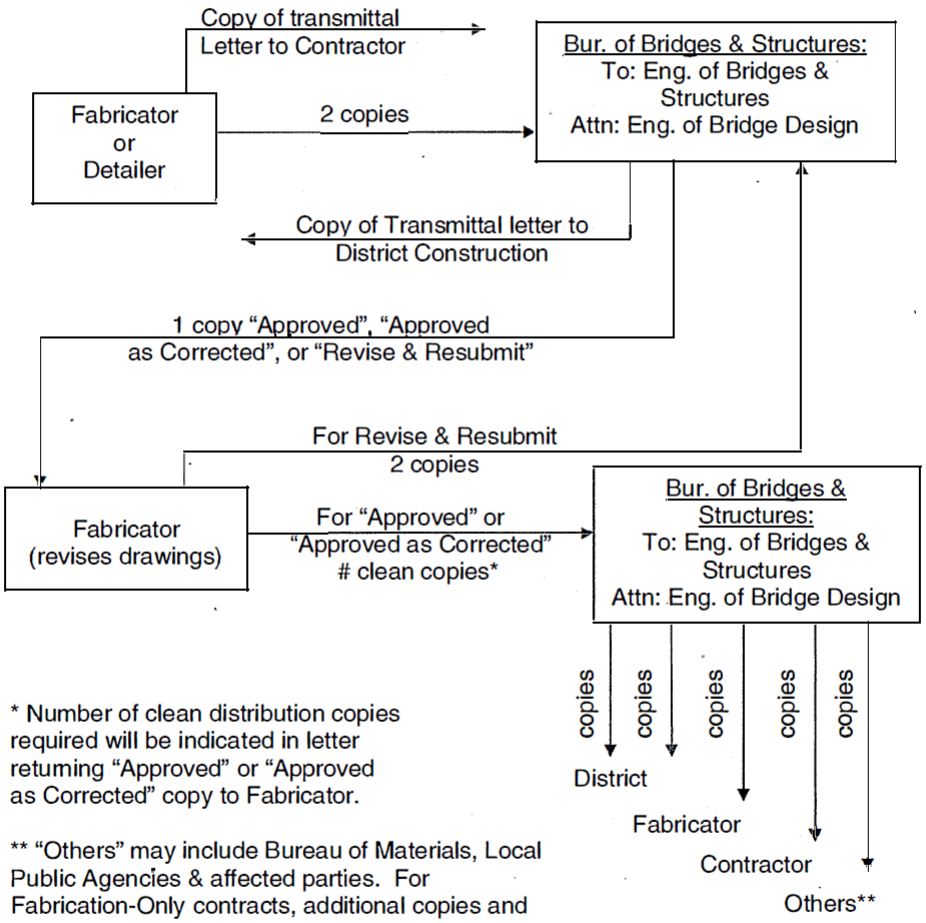

* Number of clean distribution copies required will be indicated in letter returning "Approved" or "Approved as Corrected" copy to Fabricator.

** "Others" may include Bureau of Materials, Local Public Agencies & affected parties. For Fabrication-Only contracts, additional copies and reproducibles will be required for the subsequent erection contract. Structures carrying railroads may also require reproducibles for the railroad.

Attachment C
Shop Drawing Procedures Memorandum 10/16/2019

Page 6 of 7

Shop Drawing Review Procedure for Design Consultant as Primary Reviewer

("Special Requirements" not included)

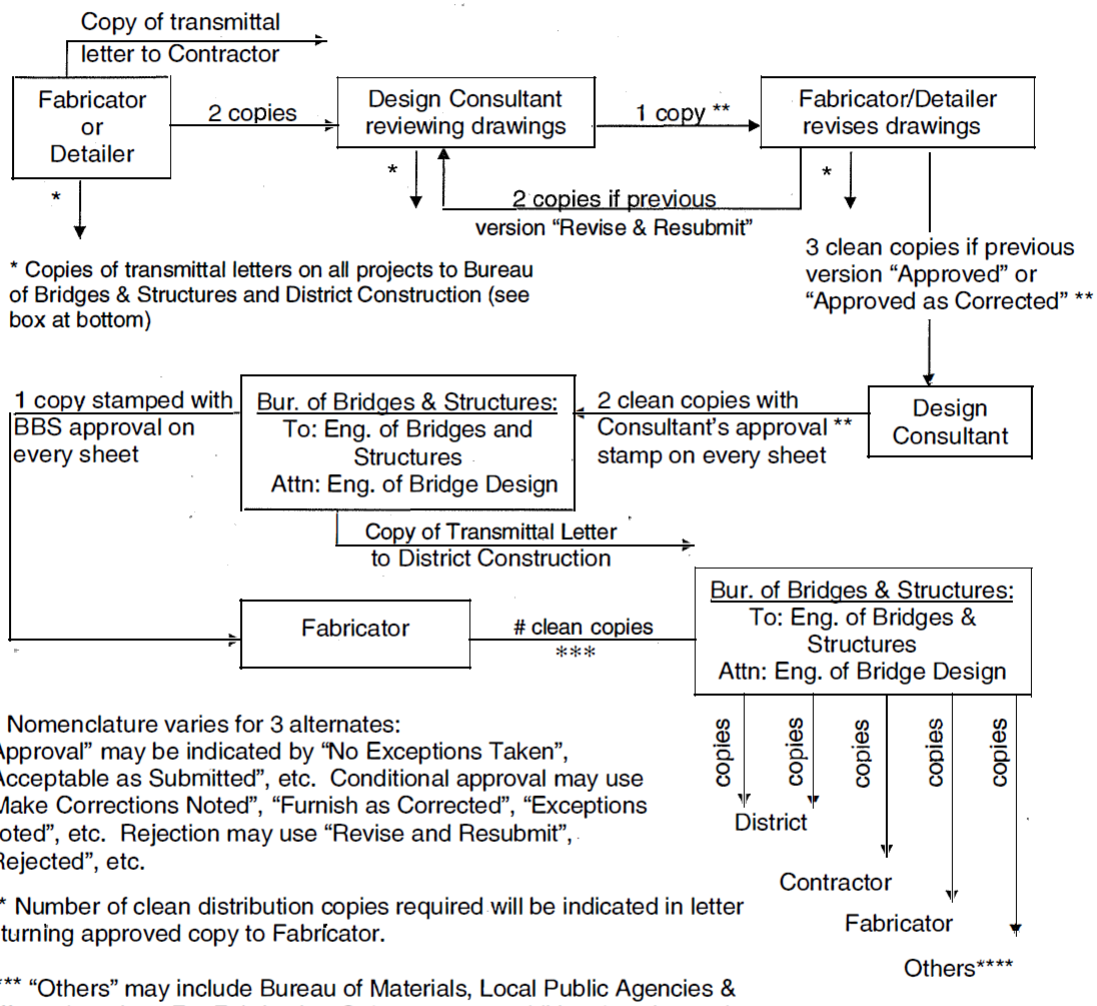

** Nomenclature varies for 3 alternates:
"Approval" may be indicated by "No Exceptions Taken", "Acceptable as Submitted", etc. Conditional approval may use "Make Corrections Noted", "Furnish as Corrected", "Exceptions Noted", etc. Rejection may use "Revise and Resubmit", "Rejected", etc.

*** Number of clean distribution copies required will be indicated in letter returning approved copy to Fabricator.

**** "Others" may include Bureau of Materials, Local Public Agencies & affected parties. For Fabrication-Only contracts, additional copies and reproducibles will be required for the subsequent erection contract. Structures carrying railroads may also require reproducibles for the railroad.

Bureau of Bridges & Structures:
To: Engineer of Bridges & Structures
Attn: Engineer of Bridge Design

District Construction:
To: Regional Engineer / Attn: District Project Implementation Engineer

Attachment C
Shop Drawing Procedures Memorandum 10/16/2019

Page 7 of 7

This Page Intentionally Left Blank