Illinois Department of Transportation

Memorandum

To:	ALL BRIDGE DESIGNERS	15.2
From:	D. Carl Puzey	D. Carl Puzey
Subject:	New Precast Prestressed Concrete IL-Beam Sections and revisions to the I-Beams and Bulb T-Beams	
Date:	March 3, 2015	

Precast prestressed concrete beams have been a widely used bridge superstructure element in Illinois since the late 1950's. IDOT began with I-beam sections and later added Bulb T-Beam sections to satisfy demand for longer concrete beam span capabilities. However, in the past 5 years the Department has seen a steady decline of new concrete beam superstructures. It appears the following issues have contributed to this current trend.

- The current span to beam depth ratios are not competitive with steel beams. Longer and shallower beam sections are necessary. Beam price data indicates concrete beams themselves are cost effective; however, additional construction depth for the same span leads to the added cost of higher profile grades, more embankment and purchase of additional R.O.W. The net result is the current concrete beam structures tend to be overall more expensive than steel beam structures. In some cases the additional construction depth precludes the use of the current concrete beams for project specific reasons.

- Some Districts have experienced poor deck removal results on concrete beams, rendering the beams unusable afterwards. This is largely due to improper deck removal techniques by the contractors coupled with beam sections which are vulnerable to damage from these techniques. This scenario has generated a perceived reduced life cycle performance of this superstructure type.

- The wide top flange of the Bulb T-Beam sections sometimes make it difficult to provide proper deck drainage, satisfy staged construction alignments, or utilize closure pours.

To address these concerns so as to provide another competitive beam option, the Department developed new precast prestressed concrete IL-Beam sections. This process involved a review of numerous beam configurations and designs of surrounding states and other leading concrete beam states throughout the country. The development process also included close coordination with the PCI, concrete researchers, Illinois fabricators and the Districts. In order to achieve our goals it was necessary to revisit and take a fresh look at all available fabrication and material options such as larger strand diameters, debonded strand, and higher concrete strengths. There was limited success with these options in the past, but recent improvements in fabrication techniques and material properties, as evidenced by other State's policies, allowed their use with the IL-Beams.

The IL-Beam sections provide the following features and improvements.

- Eleven new beam sections with 6 beam depths of 27, 36, 45, 54, 63 and 72 inches.

- Two top flange widths for beam depths 36 through 72 of either 24 or 38 inches. A narrow 24 inch top flange width can be accomplished with a form insert placed inside the wider 38 inch top flange. This enables more opportunities for staged construction scenarios, closure pours, and better deck drainage options. The wider 38 inch top flange can be utilized to achieve longer spans.

- A bigger bottom flange. This provides improved lateral stability several times better than the current sections and is needed for the longer span capabilities. Additional strands may also be added as consistent higher concrete strengths become available.

- Shallower beam depths for a given span and longer spans for similar beam depths. This will help to reduce the number of substructure units, reduce embankment, allow for lower profile grades, and reduce the purchase of additional R.O.W.

- Opportunities for wider beam spacings to decrease the number of beam lines.

- Higher strength concrete, narrower, and thicker top flanges on the larger beams to help minimize beam damage during deck removal. The beam sections will also provide for a top debonded flange area to assist with future deck removal.

- Curved flange to web transitions which provide for more strand options, easier form removal, and better aesthetics due to less entrapped air.

- Standardized spacing of shear reinforcement – 3, 6, 12 and 24 inches. The IL-Beams introduce the use of standardized epoxy coated welded wire reinforcement (WWR). This is intended to simplify fabrication and provide improved durability.

IL- Beam Section Properties

Figure 1 provides the dimensions and section properties of the 11 IL-Beam sections. The beam designation ILXX-YYZZ denotes the following:
XX = beam depth; YY = top flange width and ZZ = bottom flange width.

Permissible Strand Locations for IL-Beams

Figure 2 shows the permissible strand locations and row designations for the IL-Beams. Note that the 0.6" strand uses the same 2" x 2" grid as the 0.5" strand. There are 5 top row locations of two strands each which is derived from our limits of a maximum 4 straight top strands and 6 draped strands.

Typical Layout of Prestressing Strands for IL-Beams

Figure 3 illustrates how to detail a strand pattern on base sheets. Note the new presentation for partially debonded strands and straight top strands.

IL-Beam Planning Charts

Figures 4 and 5 are simple and multi-span planning selection charts showing a range of span lengths available based on beam size and beam spacing. The beam spacing ranges are indicated on the chart bars and range from 5 to 10 feet for the IL-Beams. The larger 63 and 72 inch beams have a minimum beam spacing of 6 feet. The multi-span charts are based on two equal spans. Note, the site location and delivery route shall always be considered especially when specifying the longer, heavier IL-Beams.

Preliminary Design Charts

Figures 6 through 16 consist of preliminary simple span design charts for each of the 11 IL-Beam Sections. They indicate the maximum and minimum span for each strand pattern and beam spacing. These charts provide the designer with a starting point when selecting a strand pattern but they are not to be used in lieu of computations for the final design of the IL-Beam. Preliminary multi-span design charts are not available at this time. The simple span strand patterns should work for multi-span bridges. Slight design adjustments to address end stresses at interior supports such as increasing the number of debonded strands or increasing the debonded lengths may be necessary. Additional draping should be avoided but may also be utilized provided the total limit of 6 is not exceeded.

Standard Strand Patterns

Figures 17 through 27 consist of 11 standard strand pattern tables, one for each beam. They provide the number of strands in each row, number and length of debonded strands in each row, number of draped strands and number of fully tensioned top strands.

The standard strand patterns for the IL-Beams were developed based on the following criteria:

1. 0.6 in. diameter low-relaxation 7 wire strands with an ultimate strength, f_{pu}, of 270 ksi. The Initial Steel Stress Limit, f_{pbt}, is equal to 0.75 f_{pu}; however, the initial Prestressing Force, Fi, is rounded down to the nearest tenth of a kip based on the typical accuracy of a fabricator's prestressing equipment and the f_{pbt} is adjusted accordingly as shown.

TABLE OF STANDARD PRESTRESSING LOAD (Low Relaxation)			
Nominal Diameter	Nominal Steel Area	Initial Prestressing Force (F_i)	Initial Steel Stress Limit (f_{pbt})
Inch	Sq. Inch	kips	ksi
1/2	0.153	30.9	201.96
6/10	0.217	43.9	202.30

2. A concrete compressive strength, f'c, for the beam of 8.5 ksi with a release strength, f'ci, of 7 ksi. A specified concrete compressive strength for the bridge deck of 4.0 ksi.

3. HL-93 live loading using the distribution specified in AASHTO LRFD Table 4.6.2.2.2b-1. The overhang of the exterior beam shall be limited to half the beam spacing or 3'-8", whichever is smaller. The lever rule need not be checked. Note the simplified live load equations for prestressed concrete beams shall not be used.

4. Simple Span

5. 6 beam lines.

6. 8 in. thick concrete deck.

7. 2 in. average fillet height for dead load only (not included in section properties).

8. Standard F-shape concrete barrier with a weight of 0.45 k/ft.

9. 50 psf future wearing surface.

10. Minimum beam spacing of 5 feet for the IL 27 through IL 54 beams and 6 feet for the IL 63 and IL 72 beams; maximum beam spacing of 10 feet for all beams.

11. Minimizing the number of draped strands for safety and constructability. A maximum of 6 is permitted. This was accomplished by permitting up to 4 permanent, fully tensioned, top strands and by utilizing debonded strands according to AASHTO LRFD Article 5.11.4.3. Standard strand patterns will designate the number and length of debonded strands.

12. Initial tensile stress in top flange is limited such that the top reinforcement in the top flange satisfies AASHTO LRFD Figure C5.9.4.1.2-1.

13. Limit beam camber to near zero or greater after initial deck placement. Camber determined per the suggested simple span multipliers of the PCI Design Handbook.

14. Centerline of bearing located at 7 ½" from beam end utilizing a 15" x 36.5" x 1" fabric bearing pad. A bearing pad of 15" x 28.5" x 1" shall be used for the IL 27 beams. The pad size was increased to satisfy AASHTO LRFD Article 5.8.3.5.

15. A factor of safety of 1.5 (cracking); 1.0 (compression); and 1.5 (failure) for beam stability during initial lifting.

The following is the nomenclature for a typical IL-Beam strand pattern.

Example: Strand pattern 46B-2T-8db-4d for the IL45-3838 Beam

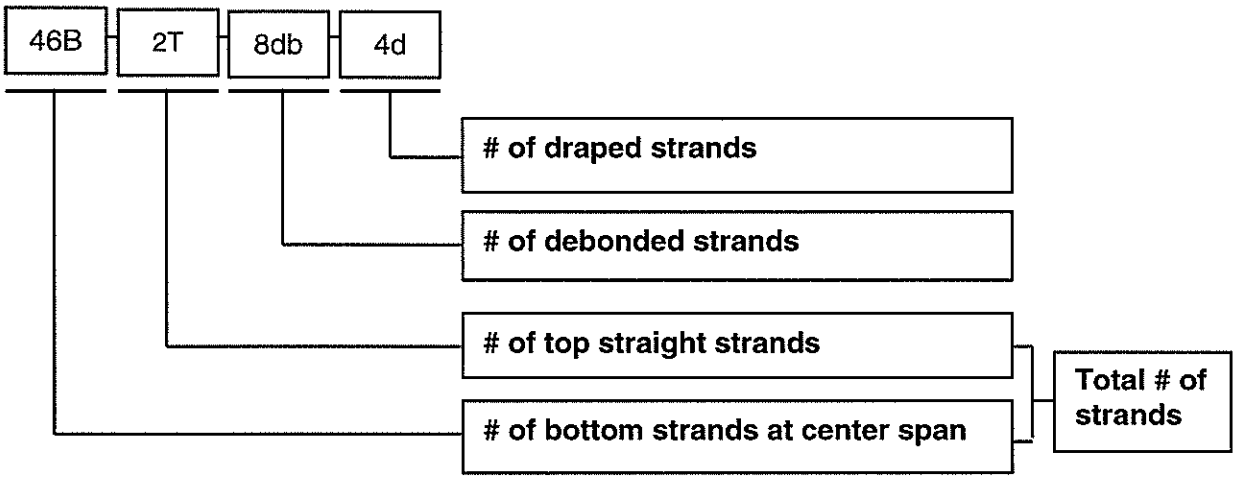

Lifting Loops for IL-Beams

Figure 28 contains the lifting loop design and details for the IL-Beams. These beam sections are much heavier per foot than the I-Beam and Bulb T-Beam sections and can be much longer as well. Hence, the number of lifting loop locations per beam end may be 1, 2 or 4. Three lifting loops per beam end were not considered because it is not plausible to provide balanced lifting. The number, location and specific directions for these lifting loops satisfy all beam stresses and stability for the standardized beams presented. Note there are different lifting loop locations for the larger, longer beams for lifting stability. Also note that lifting loops remain with the ½" diameter 270 ksi strands. The 0.6" diameter strand is not permitted for lifting loops.

Splitting Resistance Details

Figure 29 covers the splitting steel details for the IL-Beams. The area of steel in the splitting zone was increased to handle the larger prestressing forces according to AASHTO LRFD Article 5.10.10.1. This steel consists of 1" diameter threaded rods and D31 bars based on the definition of the splitting zone (h/4) as defined by AASHTO. Fifty percent of the required steel area was also placed a distance of h/8 from the beam end based on recommendations from various reports and researchers. Other new features include bottom flange confinement reinforcement welded to the bottom plate rather than using shear studs. This provides better confinement and reduces congestion. Also, jam nuts from the threaded rods to the bottom plate were added to reduce the slack in the threads and help minimize cracking. The standard plate lengths are detailed for integral abutment structures but longer bottom plates will be required when bearings are present.

Permanent Bracing Details

Figures 30 through 33 illustrate permanent bracing details for the IL-Beams. This bracing is provided primarily to ensure beam stability during erection and bridge deck construction. All IL-Beams shall have a minimum of two brace points with a maximum spacing of 35 feet. Structures with skews less than or equal to 20 degrees shall be braced along the skew.

Miscellaneous Details

Figures 34 through 40 cover a variety of dimensional and reinforcement details standardized for the IL-Beams. They include larger bearing pads, diaphragms, abutments and pier caps, and revised detailing primarily resulting from the heavier, longer beams.

Continuity Details

Figure 41 depicts the guidelines for the bridge deck reinforcement requirements over a pier. The Department will continue to design concrete beams as continuous over the intermediate supports for composite dead load and live load plus impact. The principles of mild reinforced concrete design shall be used with the reinforcement in the bridge deck acting as the tensile portion of the resisting moment couple.

Also note that to create an adequate continuity connection at the bottom of the IL-Beams, the conventional mechanically spliced #8 bars have been replaced with extended beam strands. The required number, length and configuration are detailed on each IL-Beam base sheet.

New Bridge Deck Slab Design Charts

Figures 42 and 43 contain the revised deck slab design chart and design span definition. The design chart was revised for a bridge deck concrete compressive strength, f'c of 4.0 ksi and a design span up to 10 feet. Since the ultimate moment capacity is derived from the bridge deck concrete strength, the 4.0 ksi helped achieve the longer span lengths. Please note that the bridge deck concrete compressive strength also now matches the Standard Specifications for Road and Bridge Construction.

Base Sheets

A two sheet standard base sheet set has been developed for each of the 11 new IL-Beam sections. They may be found in the Prestressed Bridge Cell Library on the IDOT website.

PPC I-Beam and Bulb T-Beams

PPC I-Beams and Bulb T-Beams will continue to be designed and produced. The new IL-Beams provide many improvements but they are tailored for longer spans and are considerably heavier than our current beam sections and therefore may not always be the best economic solution for shorter spans. Many of the new IL-Beam sections have depths similar to the I-Beam and Bulb T-Beam sections, so it is important to differentiate between the sections by using the new and current beam designations accordingly.

Mixing and matching the newer concrete strengths, strand sizes and fabrication/design techniques with the PPC I-Beams and Bulb T-Beams should not be done. Only marginal span length improvements can be achieved in these beam sections since they are already optimized for the available strand locations and therefore they are not able to address the shortcomings and concerns previously identified. We also want to avoid confusion among fabricators and designers when making and designing the beams.

All details for I-Beams and Bulb T-Beams will remain the same except for the following:

- The simplified live load equations for prestressed concrete beams shall not be used. Rather, the HL-93 live loading using the distribution specified in AASHTO LRFD Table 4.6.2.2.2b-1 shall be used. The overhang of the exterior beam shall be limited to half the beam spacing or 3'-8", whichever is smaller. The lever rule need not be checked.

- The new continuity details of Figure 41 shall be adopted.

- The new bridge deck slab design chart of Figure 42 shall be adopted.

Implementation

The new IL-Beams do not replace but only expand IDOT's precast prestressed concrete beam choices and therefore they may be implemented at any time. The revisions for I-Beams and Bulb T Beams shall be effective with TS&L's approved after May 1, 2015. Please direct questions to Gary Kowalski of the Policies, Standards and Specifications Unit at (217) 785-2914.

Attachments

KLR/kktABD15.2-20150302

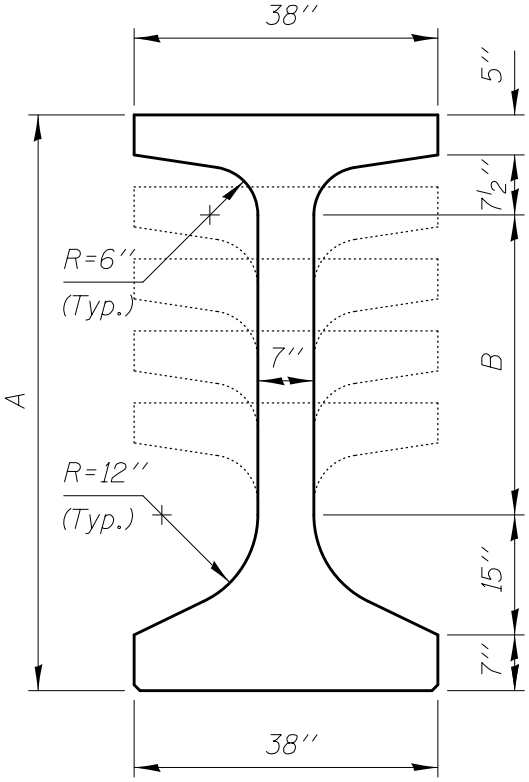

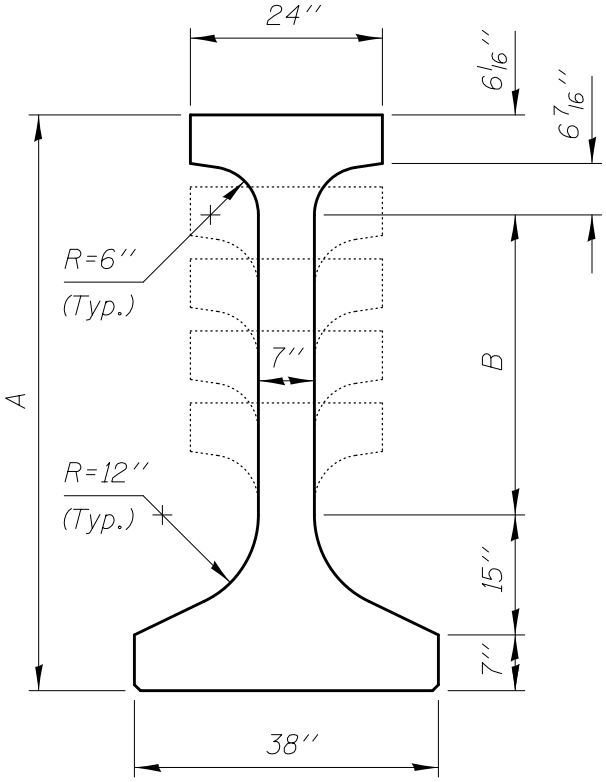

IL36 THRU IL72

DIMENSIONS

Beam	A (in)	B (in)
IL36	36	1 1/2
IL45	45	10 1/2
IL54	54	19 1/2
IL63	63	28 1/2
IL72	72	37 1/2

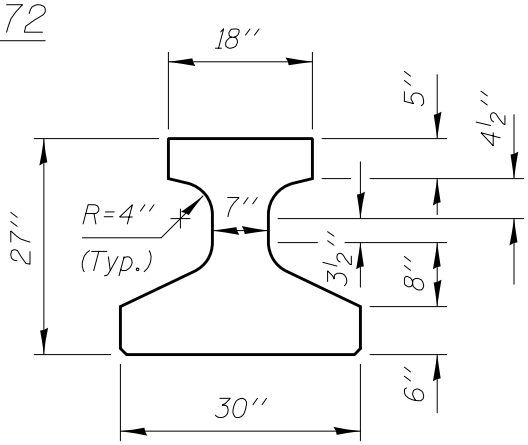

IL27

SECTION PROPERTIES

Beam	Area (in^2)	Ix (in^4)	Iy (in^4)	Sb (in^3)	St (in^3)	Cb (in)	Ct (in)	Wt.(lbs/ft)
IL27-1830	457.9	33879	20442	3060.4	2126.7	11.07	15.93	477
IL36-2438	728.0	100433	50889	6832.1	4715.1	14.70	21.30	759
IL36-3838	805.4	124639	69530	7563.0	6385.1	16.48	19.52	840
IL45-2438	791.0	182623	51146	10045.2	6809.2	18.18	26.82	825
IL45-3838	868.4	223604	69787	11004.1	9060.1	20.32	24.68	905
IL54-2438	854.0	295427	51403	13551.6	9174.7	21.80	32.20	890
IL54-3838	931.4	357078	70044	14730.9	11998.5	24.24	29.76	971
IL63-2438	917.0	441689	51661	17294.0	11790.9	25.54	37.46	956
IL63-3838	994.4	527741	70302	18687.7	15182.4	28.24	34.76	1036
IL72-2438	980.0	624180	51918	21237.8	14648.6	29.39	42.61	1021
IL72-3838	1057.4	738236	70559	22855.6	18595.3	32.30	39.70	1102

Beam nomenclature: ILXX-YYZZ
XX=Beam depth
YY=Top flange width
ZZ=Bottom flange width

Figure 1

IL-BEAM SECTION PROPERTIES

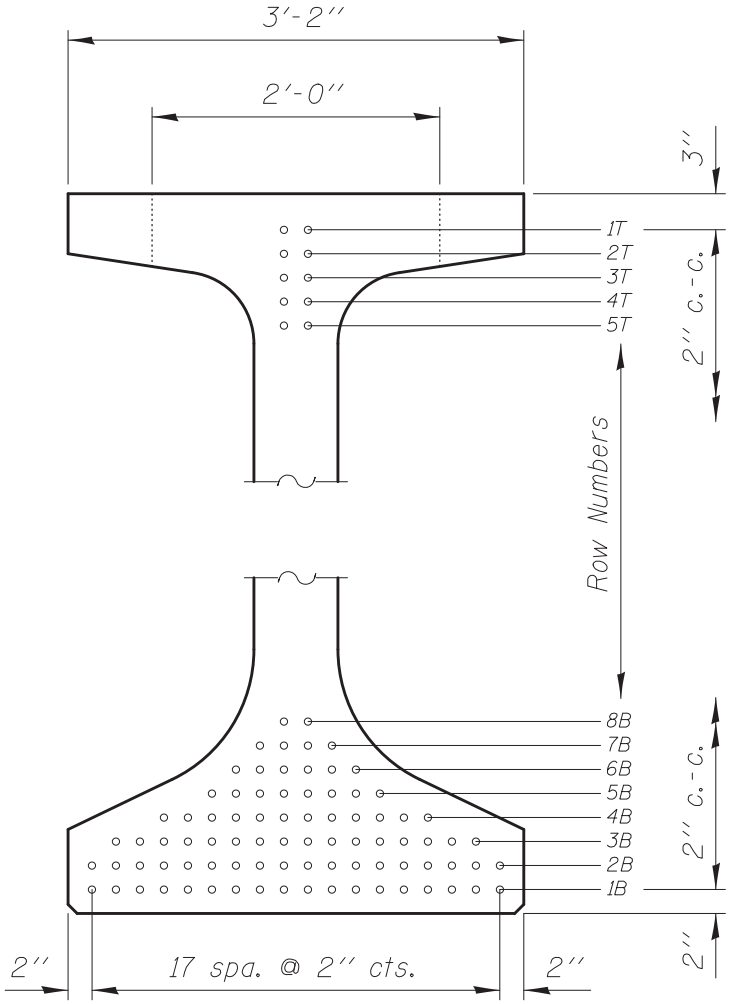

IL36 THRU IL72

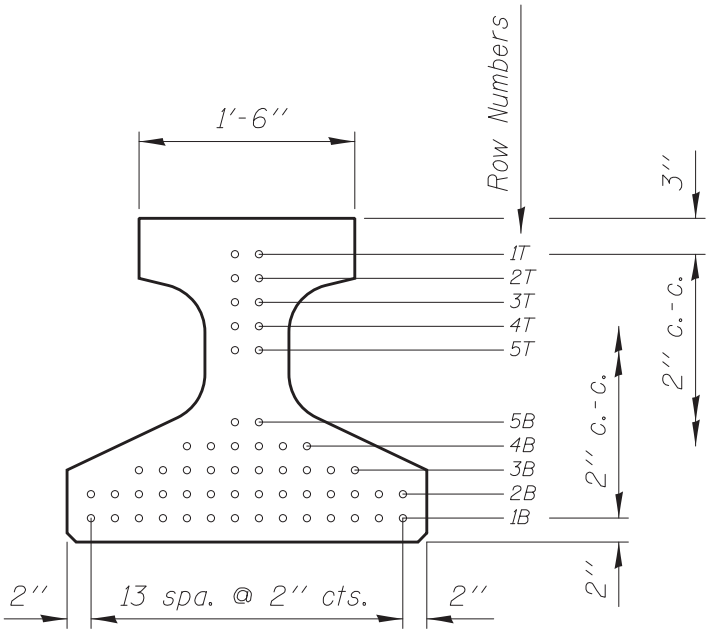

IL27

PERMISSABLE STRAND LOCATIONS IL-BEAMS

Figure 2

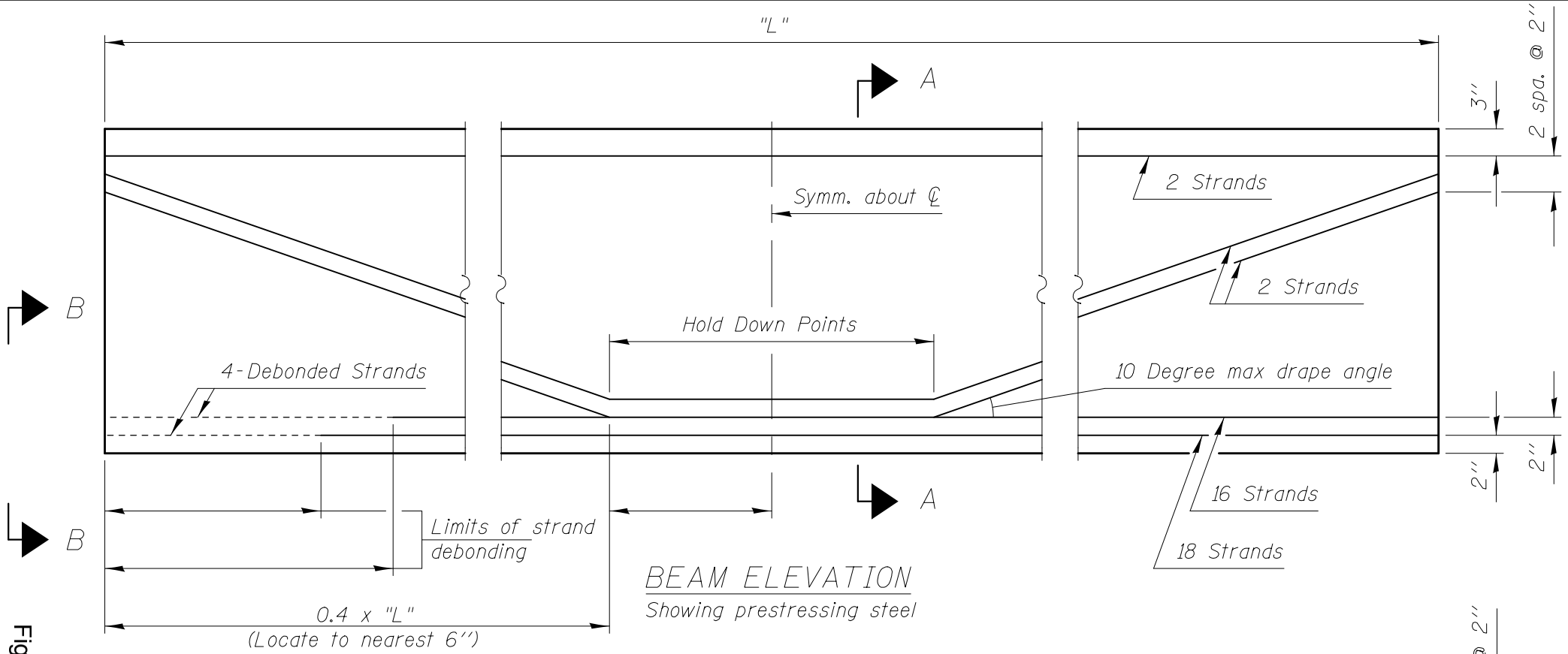

Note:

The designer shall not debond the outer most or inner most strands in a row, nor two adjacent strands.

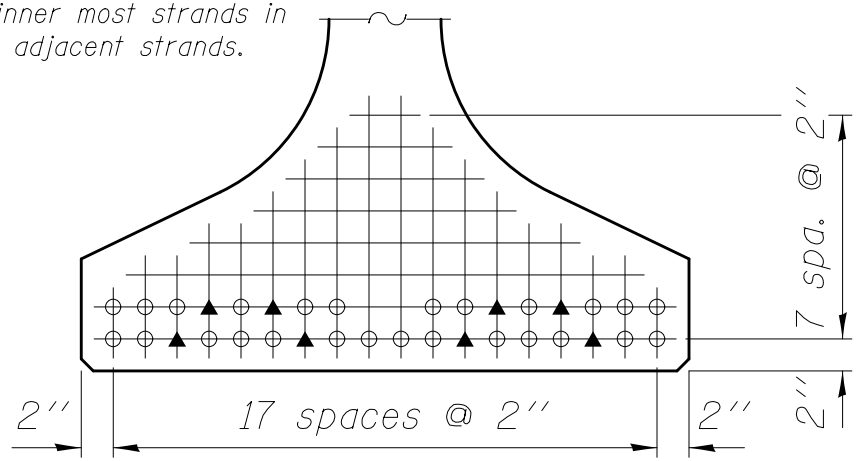

VIEW B-B

○ Fully bonded strands

▲ Partially debonded strands

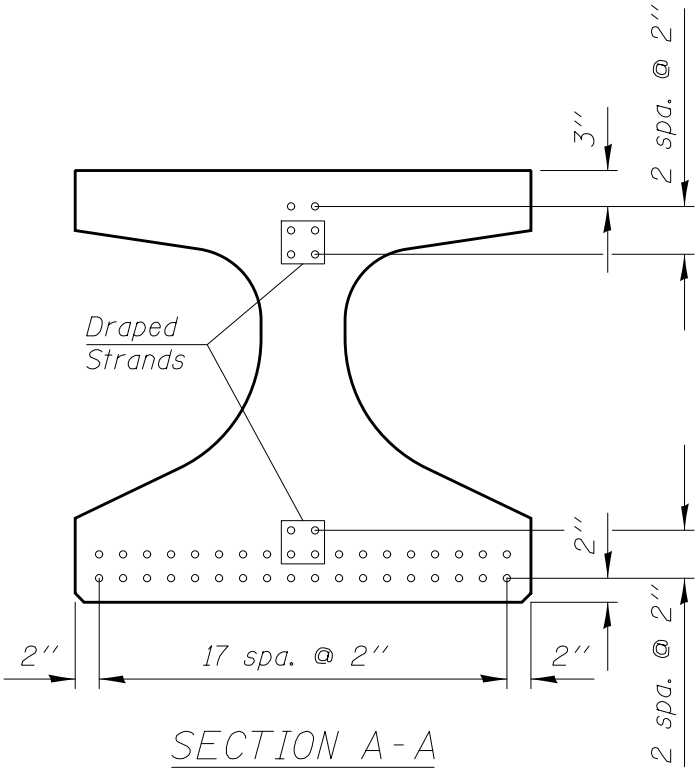

SECTION A-A

Figure 3

TYPICAL LAYOUT OF PRESTRESSING STRANDS FOR IL-BEAMS

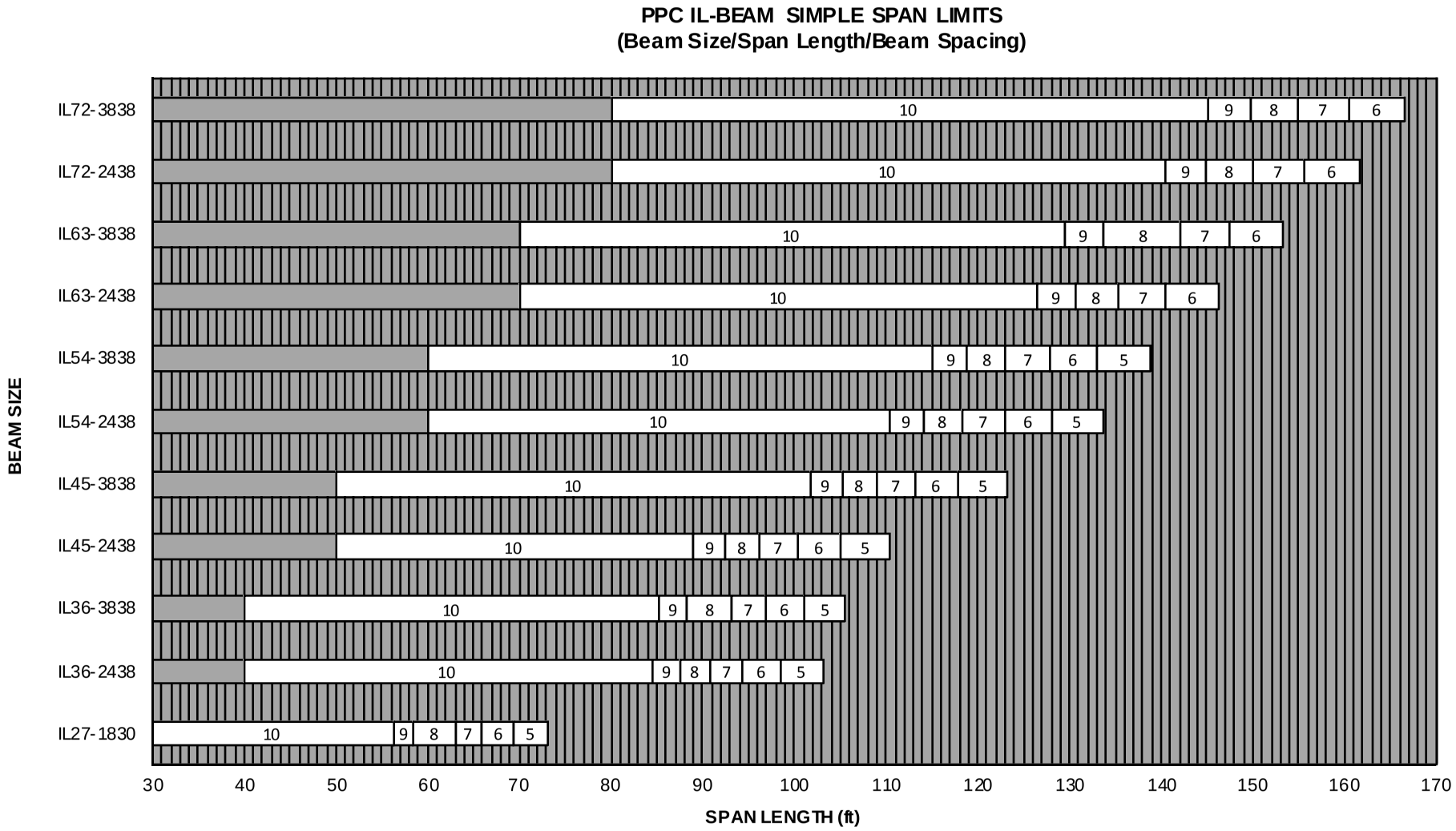
PPC IL-BEAM SIMPLE SPAN LIMITS
(Beam Size/Span Length/Beam Spacing)
BEAM SIZE
IL72-3838
IL72-2438
IL63-3838
IL63-2438
IL54-3838
IL54-2438
IL45-3838
IL45-2438
IL36-3838
IL36-2438
IL27-1830
10
9
8
7
6
5
30
40
50
60
70
80
90
100
110
120
130
140
150
160
170
SPAN LENGTH (ft)

Figure 4

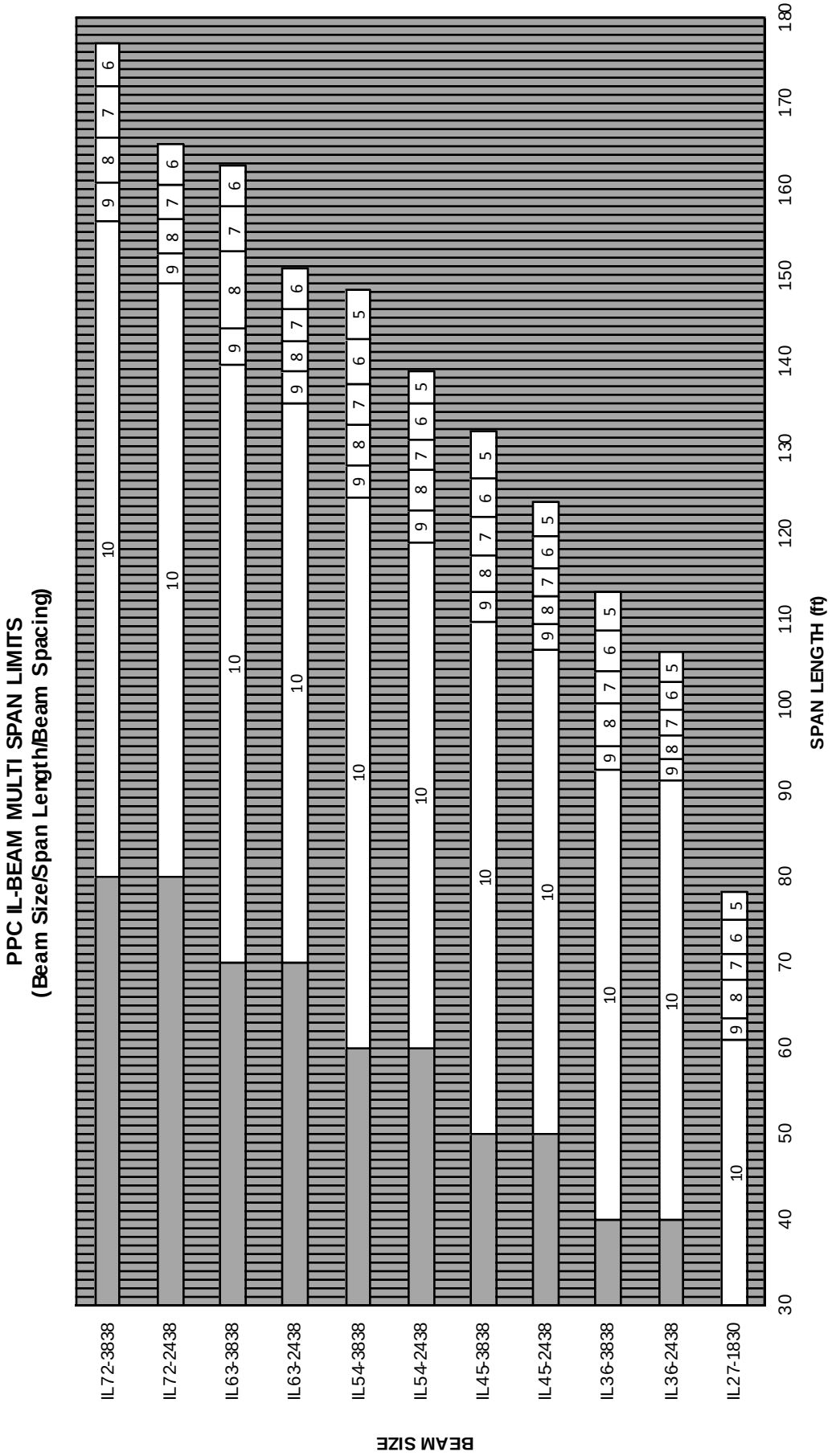
PPC IL-BEAM MULTI SPAN LIMITS
(Beam Size/Span Length/Beam Spacing)
IL72-3838
IL72-2438
IL63-3838
IL63-2438
IL54-3838
IL54-2438
IL45-3838
IL45-2438
IL36-3838
IL36-2438
IL27-1830
BEAM SIZE
30
40
50
60
70
80
90
100
110
120
130
140
150
160
170
180
SPAN LENGTH (ft)

Figure 5

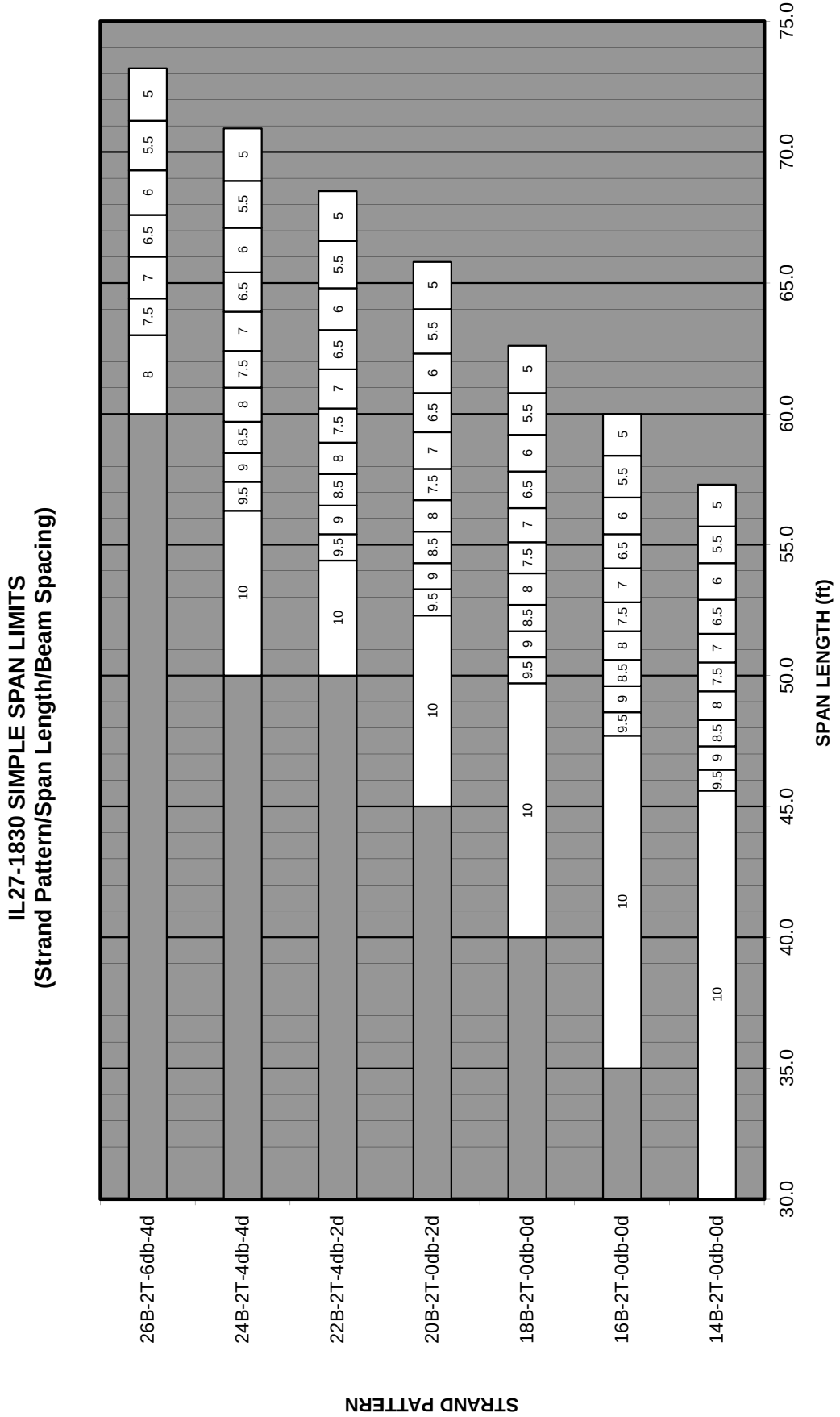
IL27-1830 SIMPLE SPAN LIMITS
(Strand Pattern/Span Length/Beam Spacing)
26B-2T-6db-4d
24B-2T-4db-4d
22B-2T-4db-2d
20B-2T-0db-2d
18B-2T-0db-0d
16B-2T-0db-0d
14B-2T-0db-0d
STRAND PATTERN
30.0
35.0
40.0
45.0
50.0
55.0
60.0
65.0
70.0
75.0
SPAN LENGTH (ft)

Figure 6

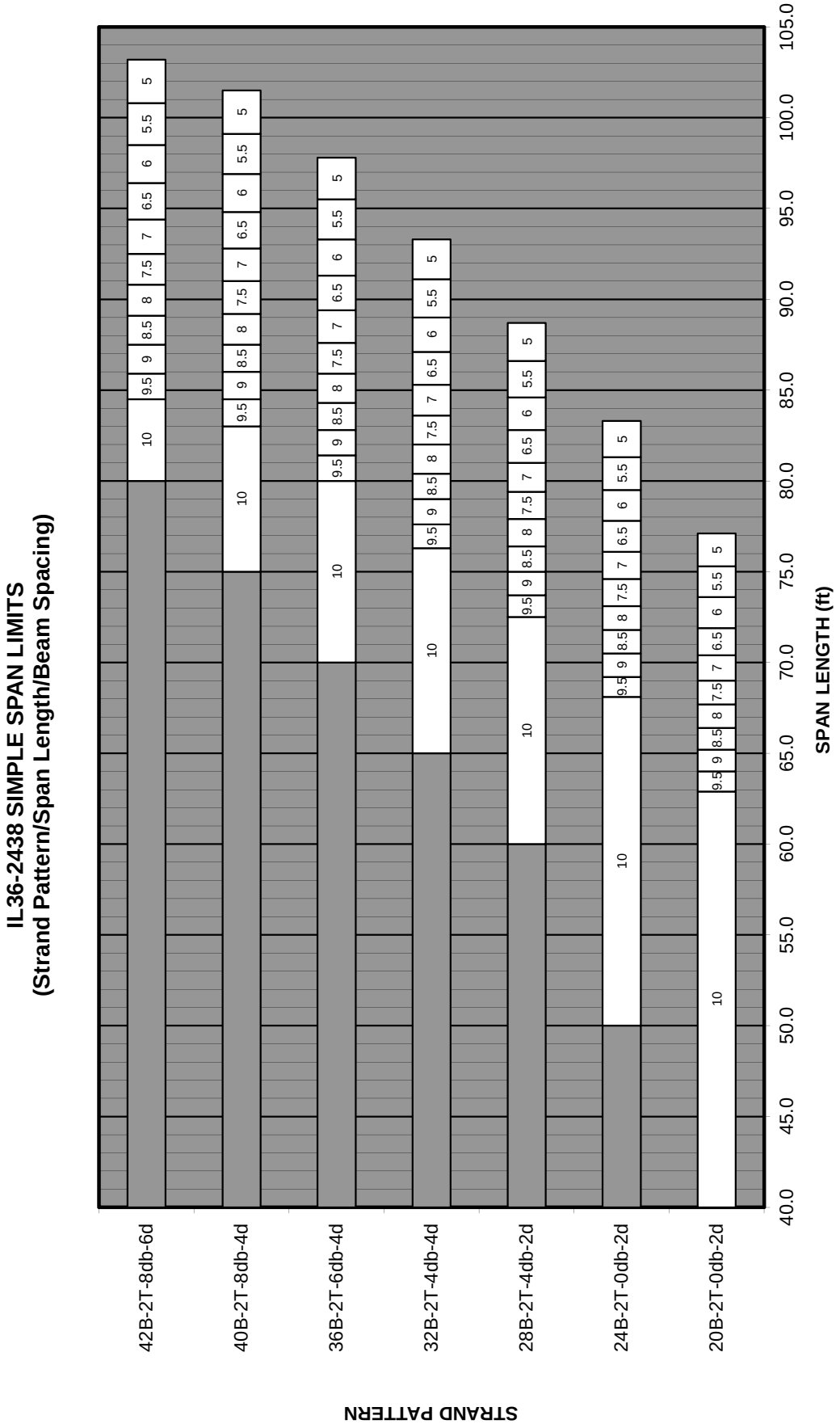
IL36-2438 SIMPLE SPAN LIMITS
(Strand Pattern/Span Length/Beam Spacing)
42B-2T-8db-6d
40B-2T-8db-4d
36B-2T-6db-4d
32B-2T-4db-4d
28B-2T-4db-2d
24B-2T-0db-2d
20B-2T-0db-2d
STRAND PATTERN
40.0
45.0
50.0
55.0
60.0
65.0
70.0
75.0
80.0
85.0
90.0
95.0
100.0
105.0
SPAN LENGTH (ft)

Figure 7

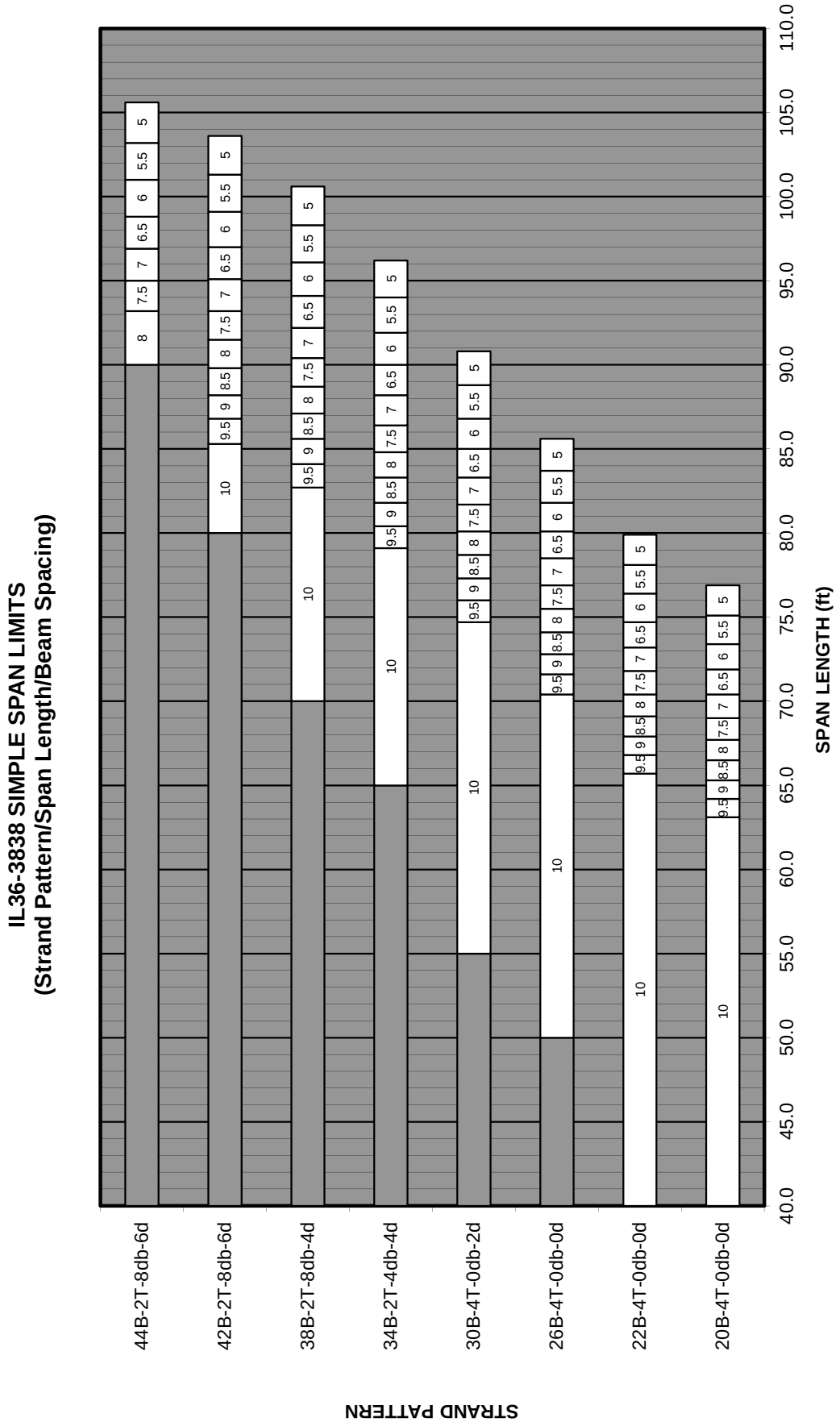
IL36-3838 SIMPLE SPAN LIMITS
(Strand Pattern/Span Length/Beam Spacing)
44B-2T-8db-6d
42B-2T-8db-6d
38B-2T-8db-4d
34B-2T-4db-4d
30B-4T-0db-2d
26B-4T-0db-0d
22B-4T-0db-0d
20B-4T-0db-0d
STRAND PATTERN
40.0
45.0
50.0
55.0
60.0
65.0
70.0
75.0
80.0
85.0
90.0
95.0
100.0
105.0
110.0
SPAN LENGTH (ft)

Figure 8

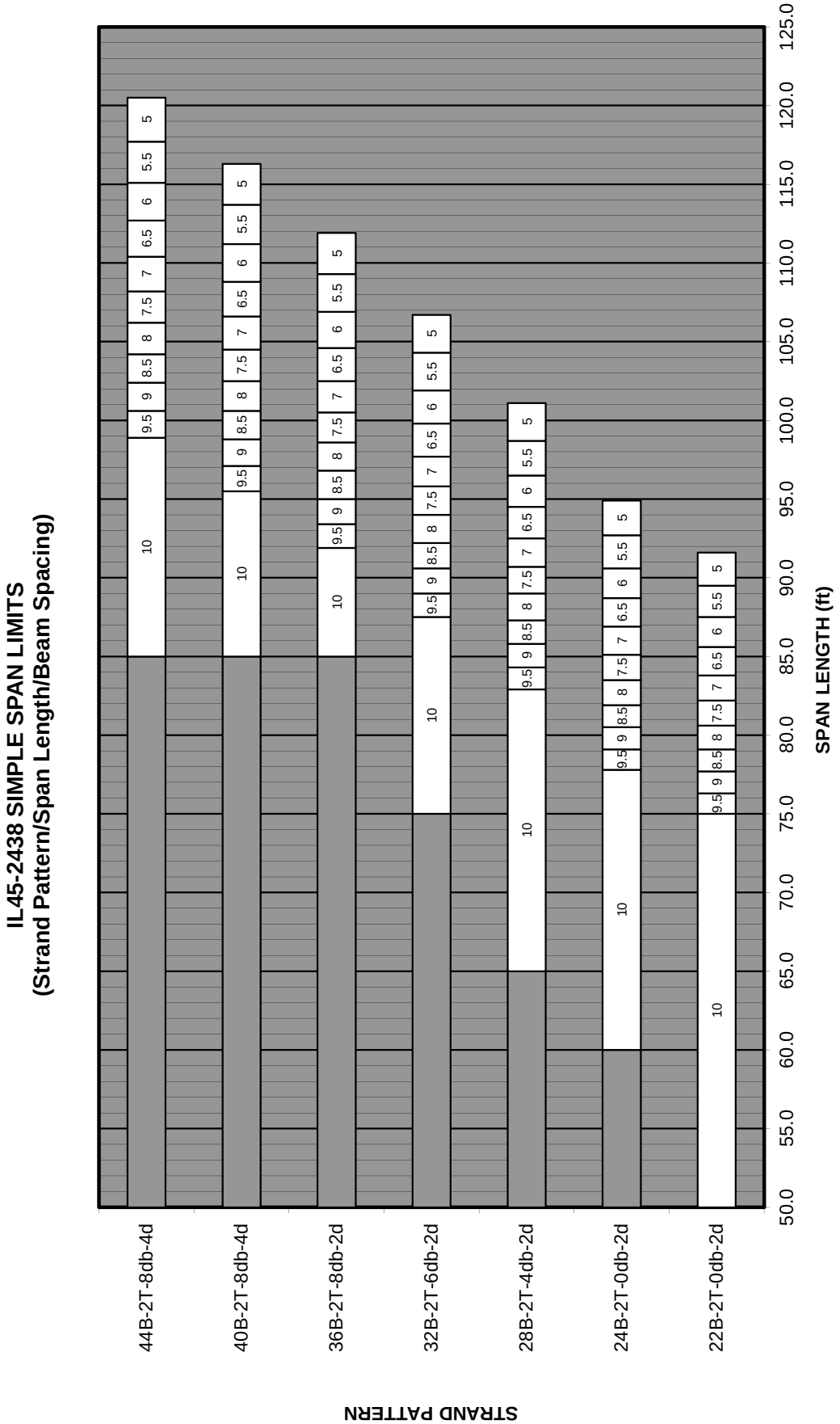
IL45-2438 SIMPLE SPAN LIMITS
(Strand Pattern/Span Length/Beam Spacing)
44B-2T-8db-4d
40B-2T-8db-4d
36B-2T-8db-2d
32B-2T-6db-2d
28B-2T-4db-2d
24B-2T-0db-2d
22B-2T-0db-2d
STRAND PATTERN
50.0
55.0
60.0
65.0
70.0
75.0
80.0
85.0
90.0
95.0
100.0
105.0
110.0
115.0
120.0
125.0
SPAN LENGTH (ft)

Figure 9

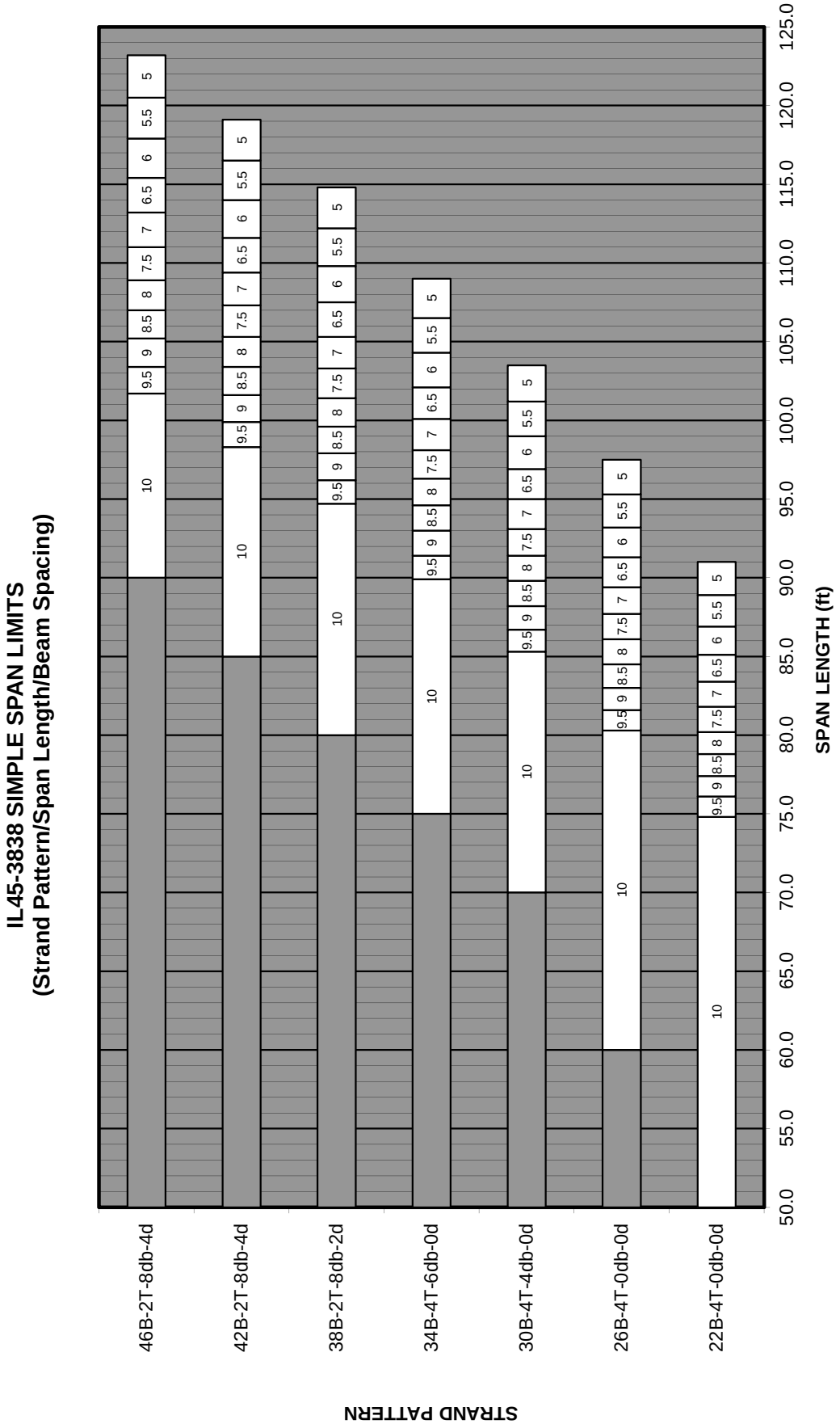
IL45-3838 SIMPLE SPAN LIMITS
(Strand Pattern/Span Length/Beam Spacing)
46B-2T-8db-4d
42B-2T-8db-4d
38B-2T-8db-2d
34B-4T-6db-0d
30B-4T-4db-0d
26B-4T-0db-0d
22B-4T-0db-0d
STRAND PATTERN
50.0
55.0
60.0
65.0
70.0
75.0
80.0
85.0
90.0
95.0
100.0
105.0
110.0
115.0
120.0
125.0
SPAN LENGTH (ft)

Figure 10

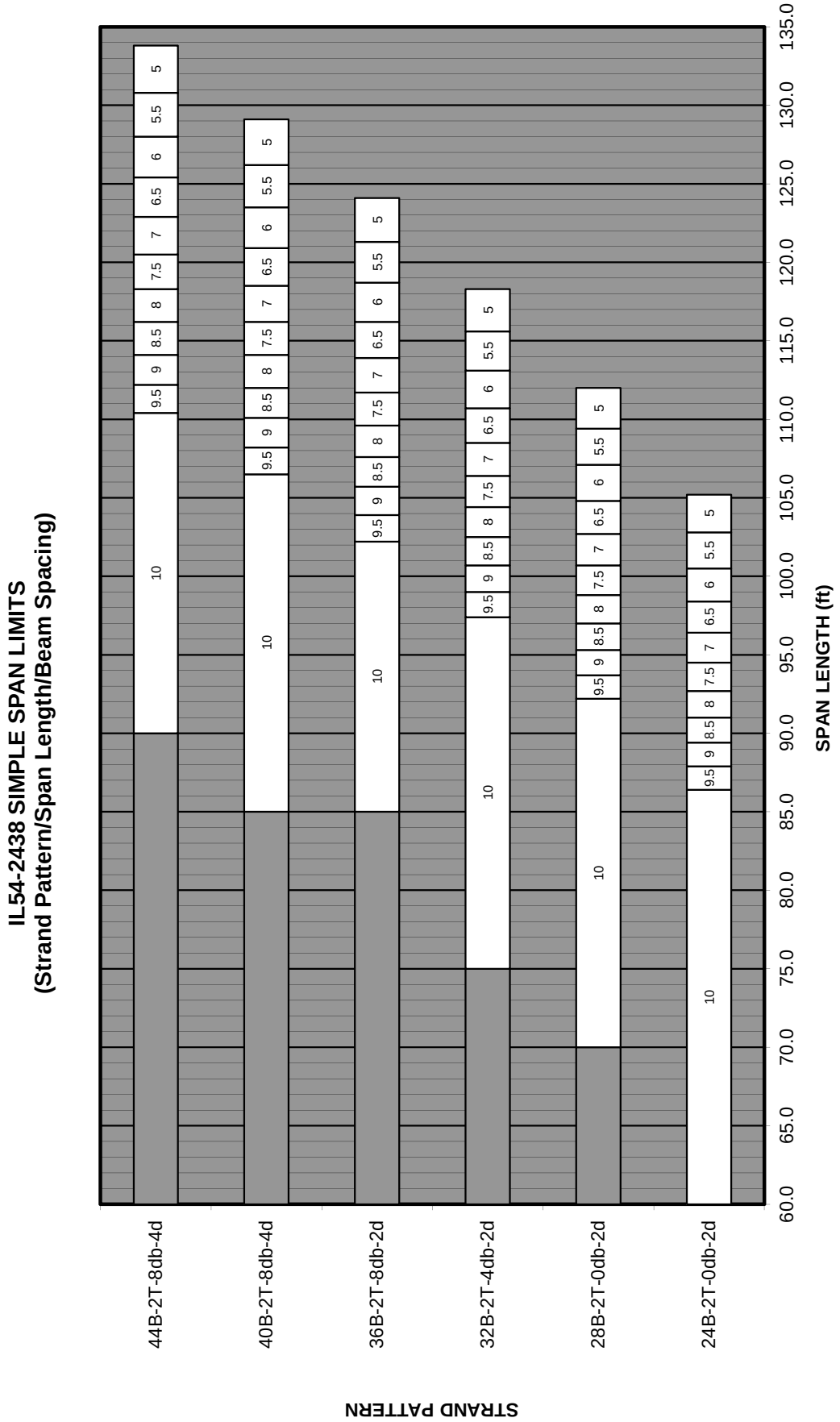
IL54-2438 SIMPLE SPAN LIMITS
(Strand Pattern/Span Length/Beam Spacing)
44B-2T-8db-4d
40B-2T-8db-4d
36B-2T-8db-2d
32B-2T-4db-2d
28B-2T-0db-2d
24B-2T-0db-2d
STRAND PATTERN
60.0
65.0
70.0
75.0
80.0
85.0
90.0
95.0
100.0
105.0
110.0
115.0
120.0
125.0
130.0
135.0
SPAN LENGTH (ft)
10
9.5
9
8.5
8
7.5
7
6.5
6
5.5
5

Figure 11

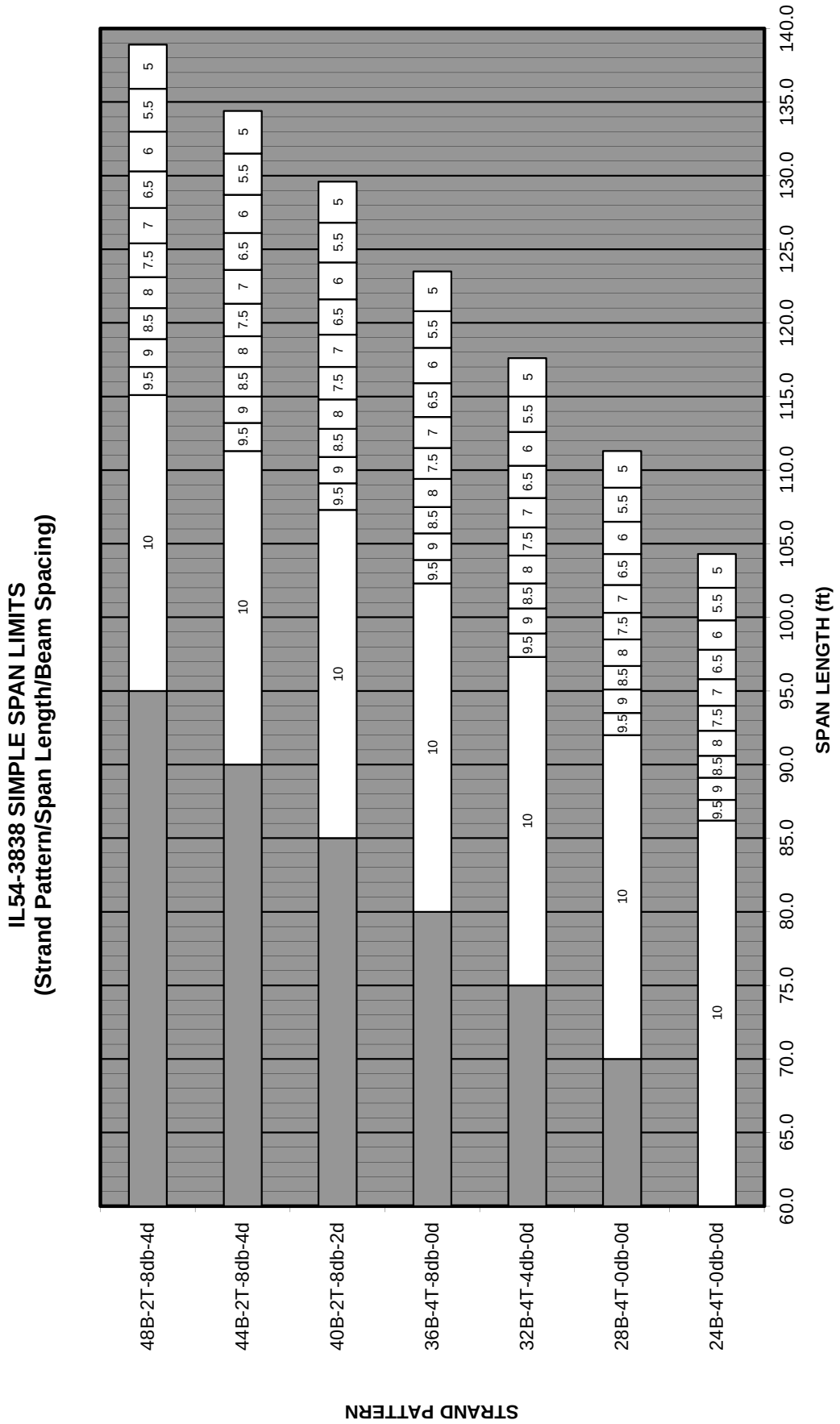
IL54-3838 SIMPLE SPAN LIMITS
(Strand Pattern/Span Length/Beam Spacing)
48B-2T-8db-4d
44B-2T-8db-4d
40B-2T-8db-2d
36B-4T-8db-0d
32B-4T-4db-0d
28B-4T-0db-0d
24B-4T-0db-0d
STRAND PATTERN
60.0
65.0
70.0
75.0
80.0
85.0
90.0
95.0
100.0
105.0
110.0
115.0
120.0
125.0
130.0
135.0
140.0
SPAN LENGTH (ft)

Figure 12

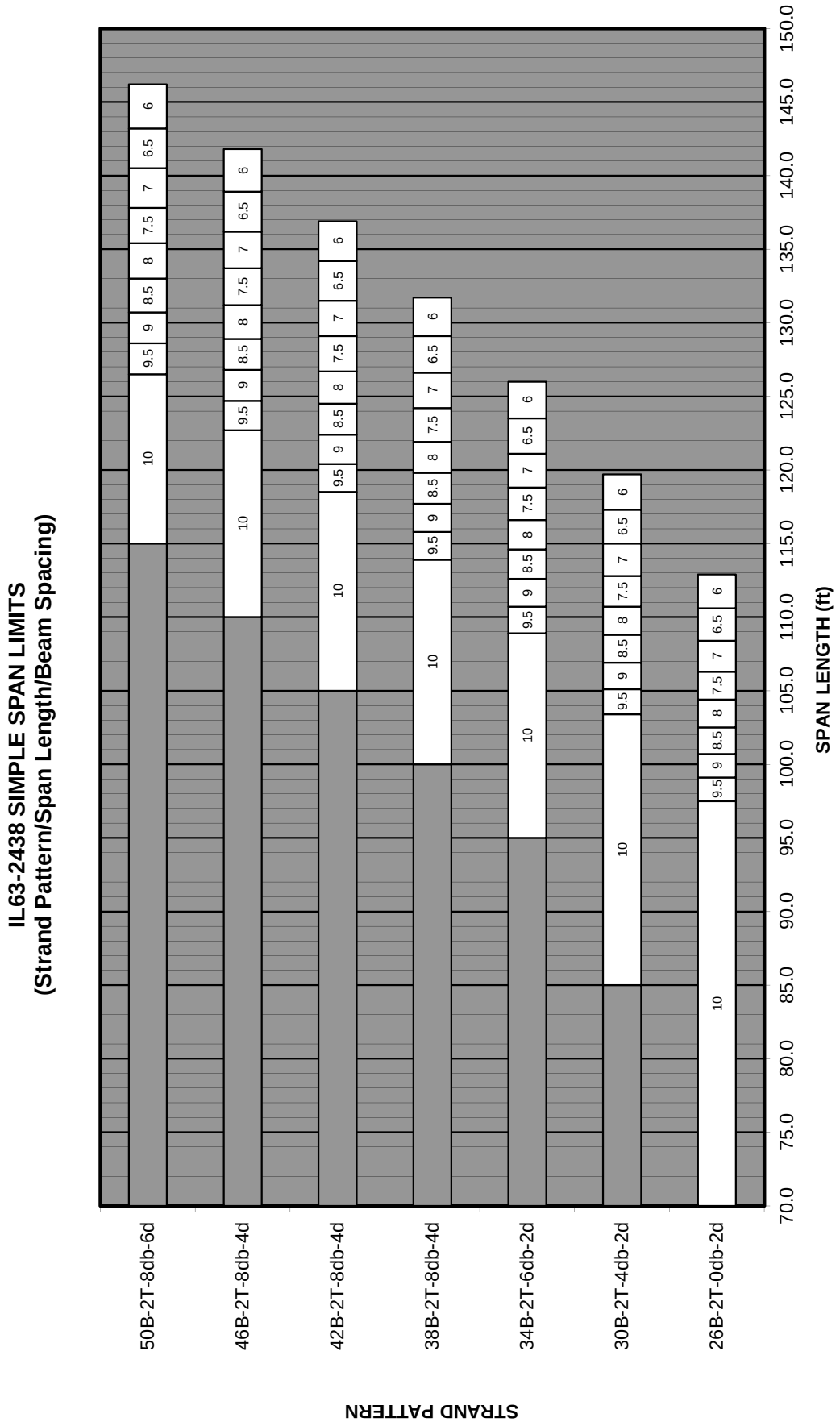
IL63-2438 SIMPLE SPAN LIMITS
(Strand Pattern/Span Length/Beam Spacing)
50B-2T-8db-6d
46B-2T-8db-4d
42B-2T-8db-4d
38B-2T-8db-4d
34B-2T-6db-2d
30B-2T-4db-2d
26B-2T-0db-2d
STRAND PATTERN
70.0
75.0
80.0
85.0
90.0
95.0
100.0
105.0
110.0
115.0
120.0
125.0
130.0
135.0
140.0
145.0
150.0
SPAN LENGTH (ft)

Figure 13

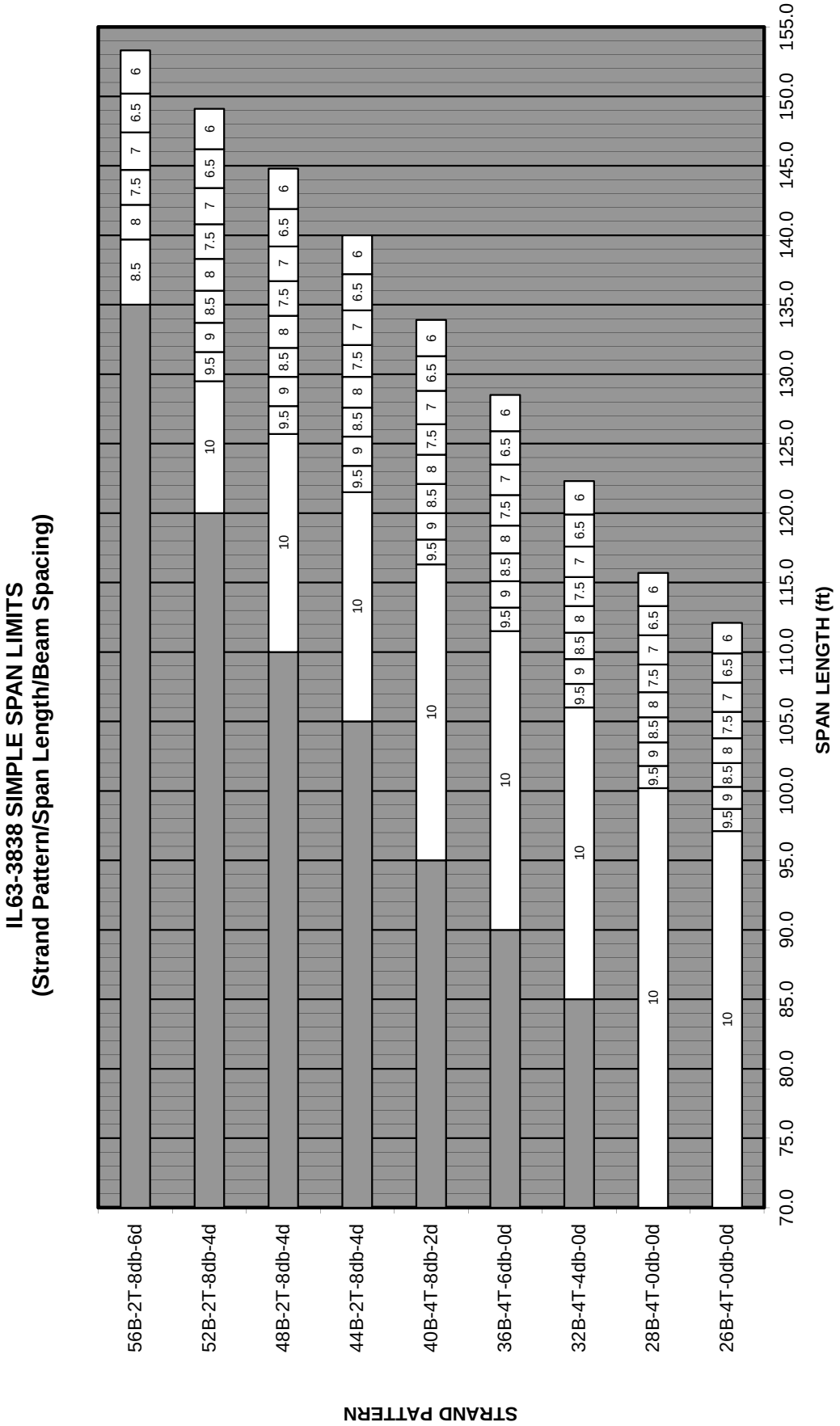
IL63-3838 SIMPLE SPAN LIMITS
(Strand Pattern/Span Length/Beam Spacing)
SPAN LENGTH (ft)
70.0
75.0
80.0
85.0
90.0
95.0
100.0
105.0
110.0
115.0
120.0
125.0
130.0
135.0
140.0
145.0
150.0
155.0
56B-2T-8db-6d
52B-2T-8db-4d
48B-2T-8db-4d
44B-2T-8db-4d
40B-4T-8db-2d
36B-4T-6db-0d
32B-4T-4db-0d
28B-4T-0db-0d
26B-4T-0db-0d
STRAND PATTERN

Figure 14

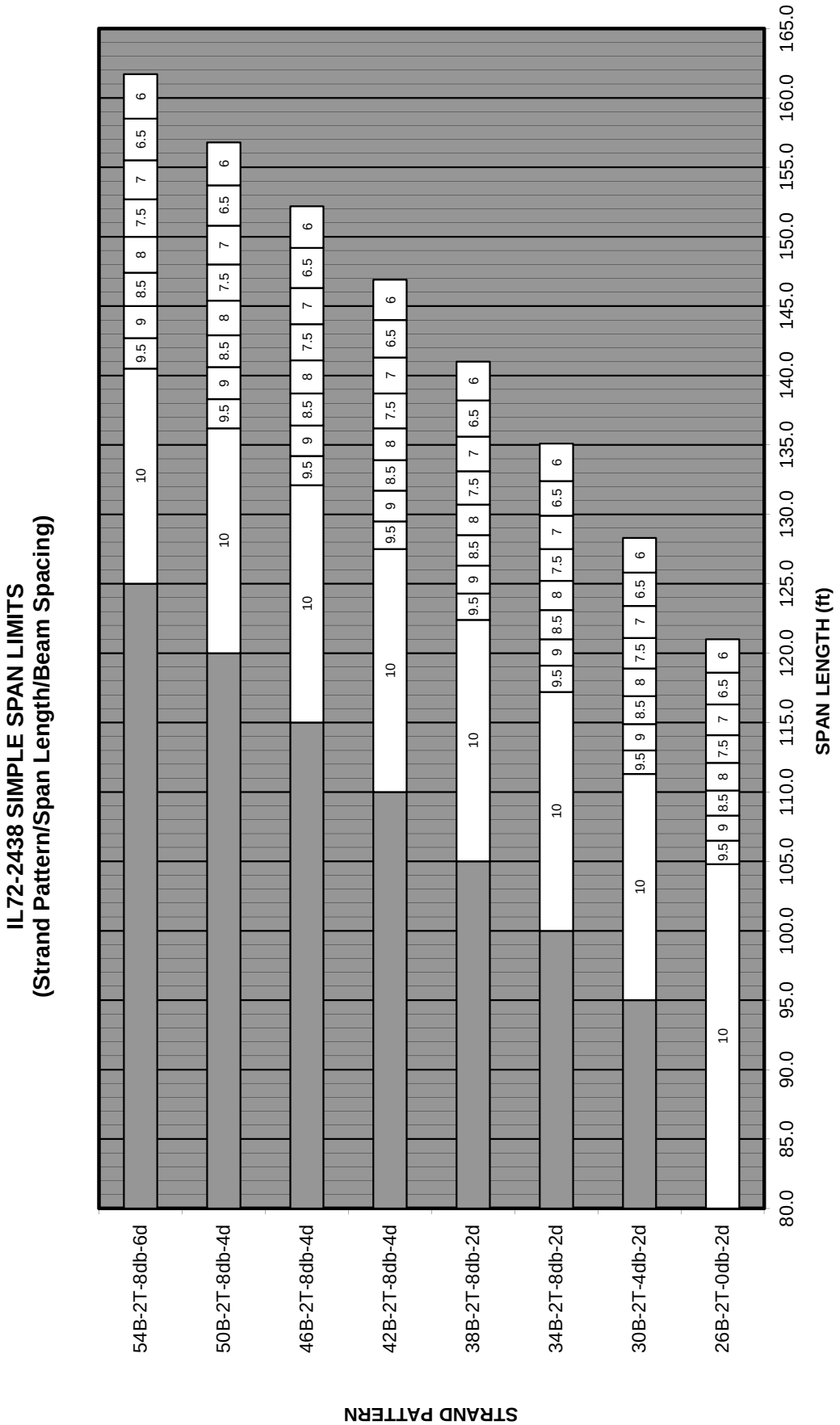
IL72-2438 SIMPLE SPAN LIMITS
(Strand Pattern/Span Length/Beam Spacing)
54B-2T-8db-6d
50B-2T-8db-4d
46B-2T-8db-4d
42B-2T-8db-4d
38B-2T-8db-2d
34B-2T-8db-2d
30B-2T-4db-2d
26B-2T-0db-2d
STRAND PATTERN
80.0
85.0
90.0
95.0
100.0
105.0
110.0
115.0
120.0
125.0
130.0
135.0
140.0
145.0
150.0
155.0
160.0
165.0
SPAN LENGTH (ft)

Figure 15

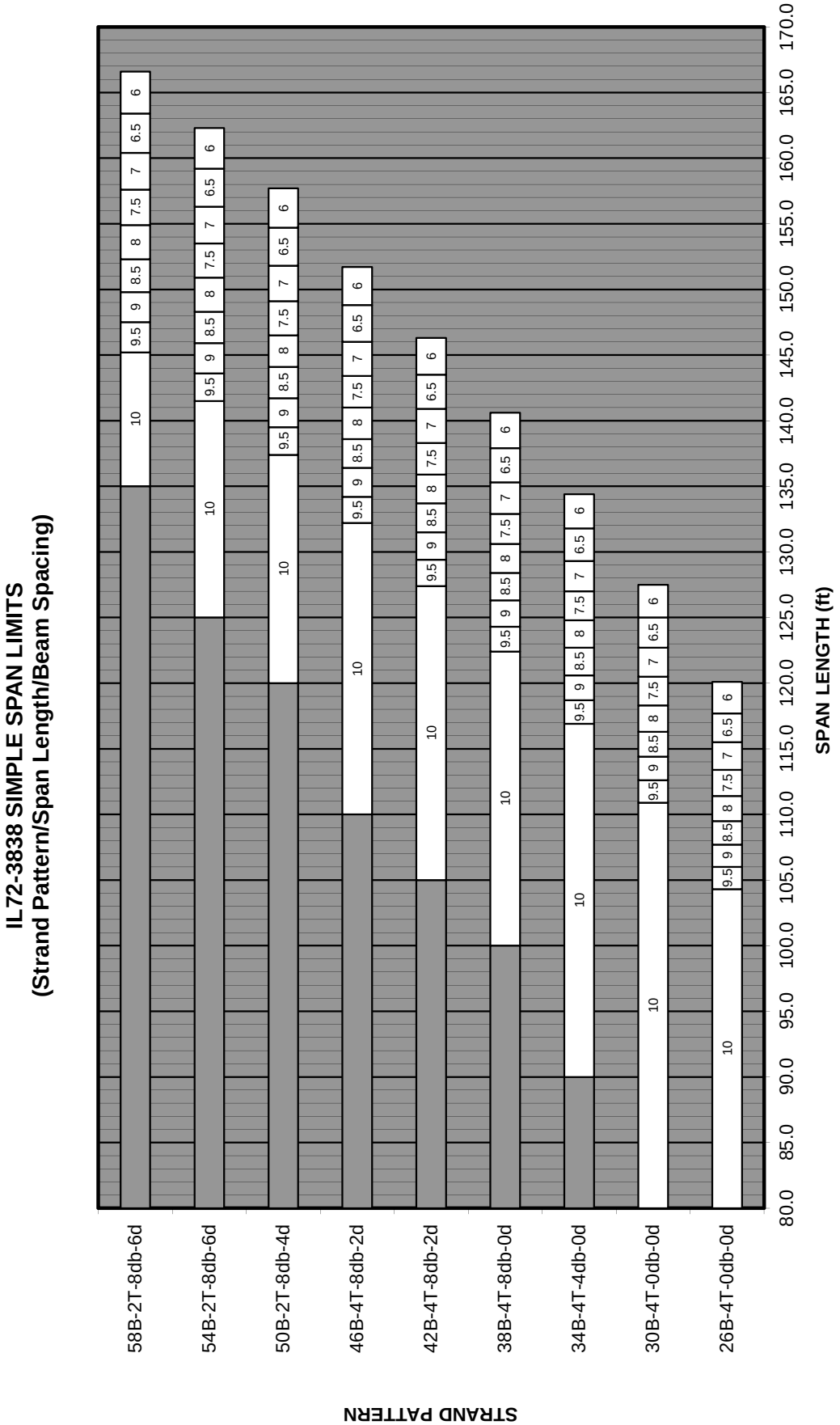
IL72-3838 SIMPLE SPAN LIMITS
(Strand Pattern/Span Length/Beam Spacing)
58B-2T-8db-6d
54B-2T-8db-6d
50B-2T-8db-4d
46B-4T-8db-2d
42B-4T-8db-2d
38B-4T-8db-0d
34B-4T-4db-0d
30B-4T-0db-0d
26B-4T-0db-0d
STRAND PATTERN
80.0
85.0
90.0
95.0
100.0
105.0
110.0
115.0
120.0
125.0
130.0
135.0
140.0
145.0
150.0
155.0
160.0
165.0
170.0
SPAN LENGTH (ft)

Figure 16

IL27-1830 Simple Span Strand Patterns

Strand Pattern	Loc.	Row Numbers																				Min. Span (ft.)
		1B			2B			3B			4B	5B	6B	7B	8B		1T	2T	3T	4T	5T	
		T	db	L (in.)	T	db	L (in.)	T	db	L (in.)												
14B-2T-0db-0d	Ctr.	10			4												2					30
	End	10			4												2					
16B-2T-0db-0d	Ctr.	10			4			2									2					35
	End	10			4			2									2					
18B-2T-0db-0d	Ctr.	10			4			4									2					40
	End	10			4			4									2					
20B-2T-0db-2d	Ctr.	14			2			2			2						2					45
	End	14			2			2									2	2				
22B-2T-4db-2d	Ctr.	14			4			2			2						2					50
	End	14	4	60	4			2									2	2				
24B-2T-4db-4d	Ctr.	14			6			2			2						2					50
	End	14	4	72	6												2	2	2			
26B-2T-6db-4d	Ctr.	14			8			2			2						2					60
	End	14	4	72	8	2	108										2	2	2			

Figure 17

IL36-2438 Simple Span Strand Patterns

Strand Pattern	Loc.	Row Numbers																				Min. Span (ft.)
		1B			2B			3B			4B	5B	6B	7B	8B		1T	2T	3T	4T	5T	
		T	db	L (in.)	T	db	L (in.)	T	db	L (in.)												
20B-2T-0db-2d	Ctr.	16			4												2					40
	End	16			2												2	2				
24B-2T-0db-2d	Ctr.	18			6												2					50
	End	18			4												2	2				
28B-2T-4db-2d	Ctr.	18			10												2					60
	End	18	4	108	8												2	2				
32B-2T-4db-4d	Ctr.	18			12			2									2					65
	End	18	4	120	10												2	2	2			
36B-2T-6db-4d	Ctr.	18			16			2									2					70
	End	18	4	144	14	2	180										2	2	2			
40B-2T-8db-4d	Ctr.	18			18			2			2						2					75
	End	18	4	144	18	4	180										2	2	2			
42B-2T-8db-6d	Ctr.	18			18			4			2						2					80
	End	18	4	168	16	4	204	2									2	2	2	2		

Figure 18

IL36-3838 Simple Span Strand Patterns

Strand Pattern	Loc.	Row Numbers																				Min. Span (ft.)
		1B			2B			3B			4B	5B	6B	7B	8B		1T	2T	3T	4T	5T	
		T	db	L (in.)	T	db	L (in.)	T	db	L (in.)												
20B-4T-0db-0d	Ctr.	18			2												2	2				40
	End	18			2												2	2				
22B-4T-0db-0d	Ctr.	18			4												2	2				40
	End	18			4												2	2				
26B-4T-0db-0d	Ctr.	18			8												2	2				50
	End	18			8												2	2				
30B-4T-0db-2d	Ctr.	18			12												2	2				55
	End	18			10												2	2	2			
34B-2T-4db-4d	Ctr.	18			14			2									2					65
	End	18	4	120	12												2	2	2			
38B-2T-8db-4d	Ctr.	18			18			2									2					70
	End	18	4	144	16	4	180										2	2	2			
42B-2T-8db-6d	Ctr.	18			18			2			2	2					2					80
	End	18	4	168	18	4	204										2	2	2	2		
44B-2T-8db-6d	Ctr.	18			18			4			4						2					90
	End	18	4	216	16	4	252	2			2						2	2	2	2		

Figure 19

IL45-2438 Simple Span Strand Patterns

Strand Pattern	Loc.	Row Numbers																				Min. Span (ft.)
		1B			2B			3B			4B	5B	6B	7B	8B		1T	2T	3T	4T	5T	
		T	db	L (in.)	T	db	L (in.)	T	db	L (in.)												
22B-2T-0db-2d	Ctr.	18			4												2					50
	End	18			2												2	2				
24B-2T-0db-2d	Ctr.	18			6												2					60
	End	18			4												2	2				
28B-2T-4db-2d	Ctr.	18			10												2					65
	End	18	4	120	8												2	2				
32B-2T-6db-2d	Ctr.	18			14												2					75
	End	18	4	144	12	2	180										2	2				
36B-2T-8db-2d	Ctr.	18			18												2					85
	End	18	4	180	16	4	216										2	2				
40B-2T-8db-4d	Ctr.	18			18			4									2					85
	End	18	4	180	16	4	216	2									2	2	2			
44B-2T-8db-4d	Ctr.	18			18			8									2					85
	End	18	4	180	16	4	216	6									2	2	2			

Figure 20

IL45-3838 Simple Span Strand Patterns

Strand Pattern	Loc.	Row Numbers																				Min. Span (ft.)
		1B			2B			3B			4B	5B	6B	7B	8B		1T	2T	3T	4T	5T	
		T	db	L (in.)	T	db	L (in.)	T	db	L (in.)												
22B-4T-0db-0d	Ctr.	18			4												2	2				50
	End	18			4												2	2				
26B-4T-0db-0d	Ctr.	18			8												2	2				60
	End	18			8												2	2				
30B-4T-4db-0d	Ctr.	18			12												2	2				70
	End	18	4	120	12												2	2				
34B-4T-6db-0d	Ctr.	18			16												2	2				75
	End	18	4	144	16	2	180										2	2				
38B-2T-8db-2d	Ctr.	18			18			2									2					80
	End	18	4	168	18	4	204										2	2				
42B-2T-8db-4d	Ctr.	18			18			6									2					85
	End	18	4	180	16	4	216	4									2	2	2			
46B-2T-8db-4d	Ctr.	18			18			10									2					90
	End	18	4	216	16	4	252	8									2	2	2			

Figure 21

IL54-2438 Simple Span Strand Patterns

Strand Pattern	Loc.	Row Numbers																				Min. Span (ft.)
		1B			2B			3B			4B	5B	6B	7B	8B		1T	2T	3T	4T	5T	
		T	db	L (in.)	T	db	L (in.)	T	db	L (in.)												
24B-2T-0db-2d	Ctr.	18			6												2					60
	End	18			4												2	2				
28B-2T-0db-2d	Ctr.	18			10												2					70
	End	18			8												2	2				
32B-2T-4db-2d	Ctr.	18			14												2					75
	End	18	4	180	12												2	2				
36B-2T-8db-2d	Ctr.	18			18												2					85
	End	18	4	180	16	4	216										2	2				
40B-2T-8db-4d	Ctr.	18			18			4									2					85
	End	18	4	180	16	4	216	2									2	2	2			
44B-2T-8db-4d	Ctr.	18			18			8									2					90
	End	18	4	180	16	4	216	6									2	2	2			

Figure 22

IL54-3838 Simple Span Strand Patterns

Strand Pattern	Loc.	Row Numbers																				Min. Span (ft.)
		1B			2B			3B			4B	5B	6B	7B	8B		1T	2T	3T	4T	5T	
		T	db	L (in.)	T	db	L (in.)	T	db	L (in.)												
24B-4T-0db-0d	Ctr.	18			6												2	2				60
	End	18			6												2	2				
28B-4T-0db-0d	Ctr.	18			10												2	2				70
	End	18			10												2	2				
32B-4T-4db-0d	Ctr.	18			14												2	2				75
	End	18	4	144	14												2	2				
36B-4T-8db-0d	Ctr.	18			18												2	2				80
	End	18	4	144	18	4	180										2	2				
40B-2T-8db-2d	Ctr.	18			18			4									2					85
	End	18	4	180	18	4	216	2									2	2				
44B-2T-8db-4d	Ctr.	18			18			8									2					90
	End	18	4	216	16	4	252	6									2	2	2			
48B-2T-8db-4d	Ctr.	18			18			12									2					95
	End	18	4	216	16	4	252	10									2	2	2			

Figure 23

IL63-2438 Simple Span Strand Patterns

Strand Pattern	Loc.	Row Numbers																				Min. Span (ft.)
		1B			2B			3B			4B	5B	6B	7B	8B		1T	2T	3T	4T	5T	
		T	db	L (in.)	T	db	L (in.)	T	db	L (in.)												
26B-2T-0db-2d	Ctr.	18			8												2					70
	End	18			6												2	2				
30B-2T-4db-2d	Ctr.	18			12												2					85
	End	18	4	216	10												2	2				
34B-2T-6db-2d	Ctr.	18			16												2					95
	End	18	4	240	14	2	276										2	2				
38B-2T-8db-4d	Ctr.	18			18			2									2					100
	End	18	4	240	16	4	276										2	2	2			
42B-2T-8db-4d	Ctr.	18			18			6									2					105
	End	18	4	240	16	4	276	4									2	2	2			
46B-2T-8db-4d	Ctr.	18			18			10									2					110
	End	18	4	240	16	4	276	8									2	2	2			
50B-2T-8db-6d	Ctr.	18			18			12			2						2					115
	End	18	4	240	16	4	276	10									2	2	2	2		

Figure 24

IL63-3838 Simple Span Strand Patterns

Strand Pattern	Loc.	Row Numbers																				Min. Span (ft.)
		1B			2B			3B			4B	5B	6B	7B	8B		1T	2T	3T	4T	5T	
		T	db	L (in.)	T	db	L (in.)	T	db	L (in.)												
26B-4T-0db-0d	Ctr.	18			8												2	2				70
	End	18			8												2	2				
28B-4T-0db-0d	Ctr.	18			10												2	2				70
	End	18			10												2	2				
32B-4T-4db-0d	Ctr.	18			14												2	2				85
	End	18	4	216	14												2	2				
36B-4T-6db-0d	Ctr.	18			18												2	2				90
	End	18	4	216	18	2	252										2	2				
40B-4T-8db-2d	Ctr.	18			18			4									2	2				95
	End	18	4	216	18	4	252	2									2	2	2			
44B-2T-8db-4d	Ctr.	18			18			8									2					105
	End	18	4	216	16	4	252	6									2	2	2			
48B-2T-8db-4d	Ctr.	18			18			12									2					110
	End	18	4	216	16	4	252	10									2	2	2			
52B-2T-8db-4d	Ctr.	18			18			14			2						2					120
	End	18	4	240	18	4	276	12									2	2	2			
56B-2T-8db-6d	Ctr.	18			18			16			4						2					135
	End	18	4	360	16	4	396	14			2						2	2	2	2		

Figure 25

IL72-2438 Simple Span Strand Patterns

Strand Pattern	Loc.	Row Numbers																				Min. Span (ft.)
		1B			2B			3B			4B	5B	6B	7B	8B		1T	2T	3T	4T	5T	
		T	db	L (in.)	T	db	L (in.)	T	db	L (in.)												
26B-2T-0db-2d	Ctr.	18			8												2					80
	End	18			6												2	2				
30B-2T-4db-2d	Ctr.	18			12												2					95
	End	18	4	216	10												2	2				
34B-2T-8db-2d	Ctr.	18			16												2					100
	End	18	4	216	14	4	252										2	2				
38B-2T-8db-2d	Ctr.	18			16			2			2						2					105
	End	18	4	216	16	4	252	2									2	2				
42B-2T-8db-4d	Ctr.	18			18			6									2					110
	End	18	4	216	16	4	252	4									2	2	2			
46B-2T-8db-4d	Ctr.	18			18			10									2					115
	End	18	4	240	16	4	276	8									2	2	2			
50B-2T-8db-4d	Ctr.	18			18			10			2	2					2					120
	End	18	4	240	18	4	276	10									2	2	2			
54B-2T-8db-6d	Ctr.	18			18			16			2						2					125
	End	18	4	240	16	4	276	14									2	2	2	2		

Figure 26

IL72-3838 Simple Span Strand Patterns

Strand Pattern	Loc.	Row Numbers																				Min. Span (ft.)
		1B			2B			3B			4B	5B	6B	7B	8B		1T	2T	3T	4T	5T	
		T	db	L (in.)	T	db	L (in.)	T	db	L (in.)												
26B-4T-0db-0d	Ctr.	18			8												2	2				80
	End	18			8												2	2				
30B-4T-0db-0d	Ctr.	18			12												2	2				80
	End	18			12												2	2				
34B-4T-4db-0d	Ctr.	18			16												2	2				90
	End	18	4	216	16												2	2				
38B-4T-8db-0d	Ctr.	18			18			2									2	2				100
	End	18	4	216	18	4	252	2									2	2				
42B-4T-8db-2d	Ctr.	18			18			6									2	2				105
	End	18	4	216	18	4	252	4									2	2	2			
46B-4T-8db-2d	Ctr.	18			18			10									2	2				110
	End	18	4	216	18	4	252	8									2	2	2			
50B-2T-8db-4d	Ctr.	18			18			14									2					120
	End	18	4	240	16	4	276	12									2	2	2			
54B-2T-8db-6d	Ctr.	18			18			16			2						2					125
	End	18	4	240	16	4	276	14									2	2	2	2		
58B-2T-8db-6d	Ctr.	18			18			16			6						2					135
	End	18	4	324	16	4	360	14			4						2	2	2	2		

Figure 27

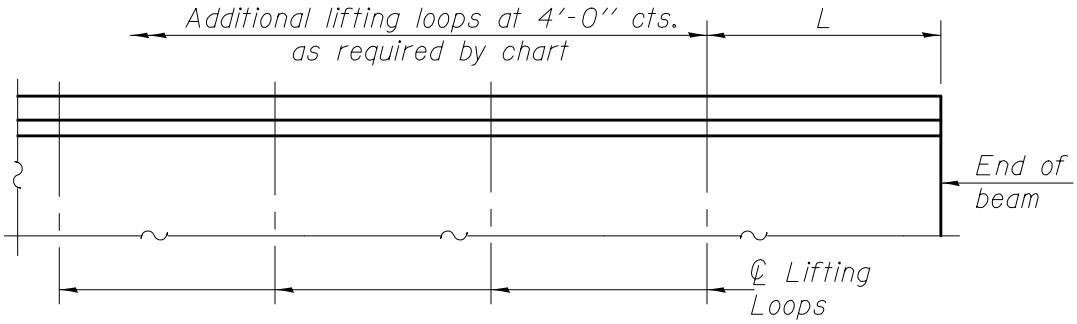

ELEVATION

See table for the number of loops and strands per loop required. All lifting loop prestressing strands shall be $\frac{1}{2}''$ ϕ-270 ksi. Detail on Base Sheet accordingly.

DESIGN CRITERIA

Beam	Wt. (Lbs./ft.)	D	*L
IL27-1830	477	2'-0''	4'-0''
IL36-2438	759	2'-6''	4'-6''
IL36-3838	840	2'-6''	4'-6''
IL45-2438	825	3'-3''	4'-6''
IL45-3838	905	3'-3''	4'-6''
IL54-2438	890	4'-0''	4'-6''
IL54-3838	971	4'-0''	4'-6''
IL63-2438	956	4'-9''	4'-6''
IL63-3838	1036	4'-9''	4'-6'' (160'); 6'-0'' (164')
IL72-2438	1021	5'-6''	4'-6'' (159'); 6'-0'' (164') 7'-6'' (168')
IL72-3838	1102	5'-6''	4'-6'' (163'); 6'-0'' (168') 7'-6'' (172'); 9'-0'' (177')

*Distance "L" was based on vertical stresses and beam stability during lifting. Some of the larger beams required the lifting loops to be moved inward to maintain stability; hence, the maximum beam lengths for the lifting loop locations are indicated in parenthesis. If the beam length exceeds these limits, a special design will be required to determine an "L" which satisfies both stability and vertical stresses.

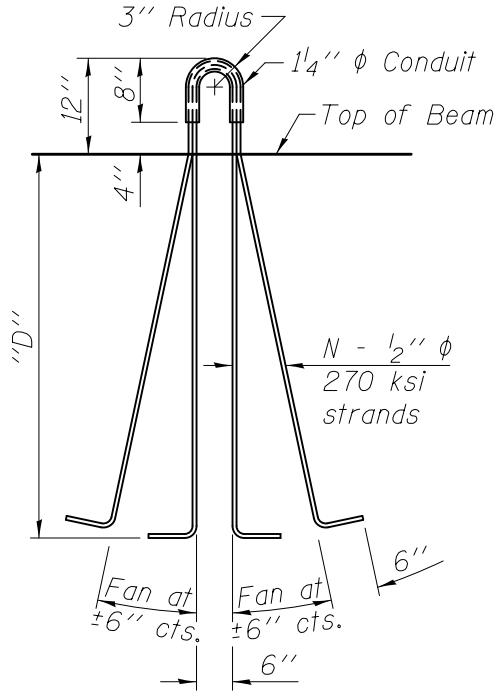

TYPICAL LIFTING LOOP

Note: When choosing the correct number of lifting loops for each end always use the minimum number possible. It's not necessarily conservative to use more.

LIFTING LOOP REQUIREMENTS

No. of loops each end of beam	No. of strands per loop (N)	Maximum Gross wt. of beam (lbs.)
1	3	41500
1	4	55400
1	5	69200
2	3	83100
2	4	110800
2	5	138500
4	3	166200
4	4	221600
4	5	277100

LIFTING LOOPS FOR IL BEAMS

Figure 28

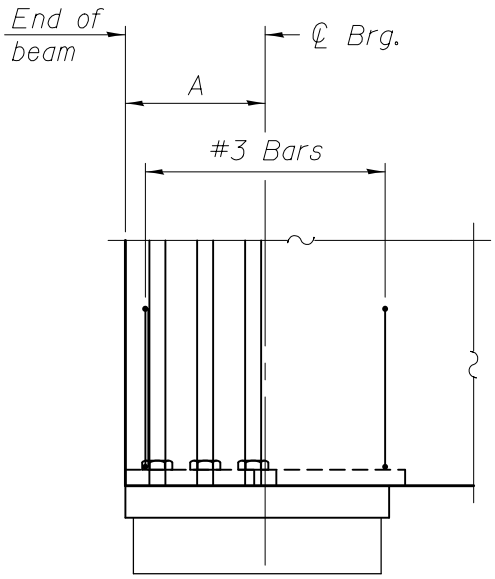

ELEVATION

Notes:

The base sheets are detailed with the minimum bottom splitting plate length which assumes there will be no bearings other than some fabric pads. When bearings are required, the plate length will need to be increased as shown. Formulas are provided to calculate the correct length and are based on adding length in $2\frac{1}{2}''$ increments. One additional welded #3 bar is also added for each $2\frac{1}{2}''$ increment.

A = $\frac{1}{2}$ x (top brg. plate width) or 8'' whichever is greater

B = (Top brg. plate width - 2'') / $2\frac{1}{2}''$ rounded up to nearest integer or 3 whichever is greater.

w = B x $2\frac{1}{2}''$ + $2\frac{1}{2}''$

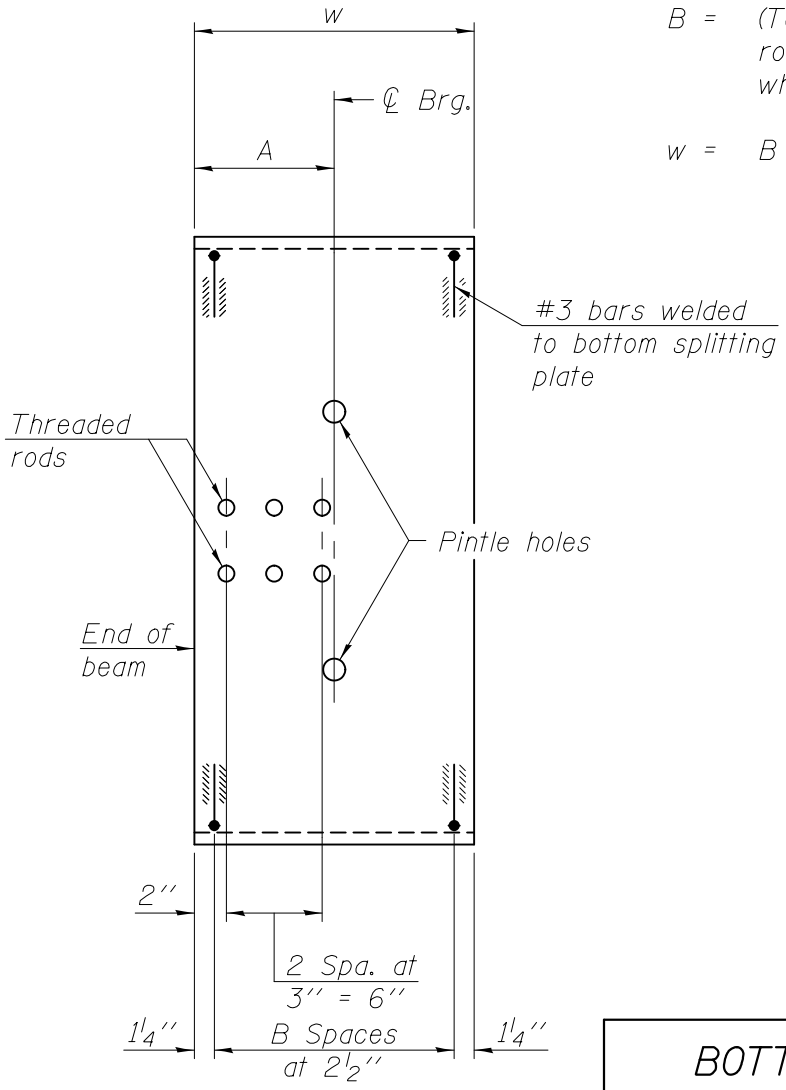

PLAN

BOTTOM SPLITTING PLATE DETAILS FOR IL BEAM SHAPES WITH BEARINGS

Figure 29

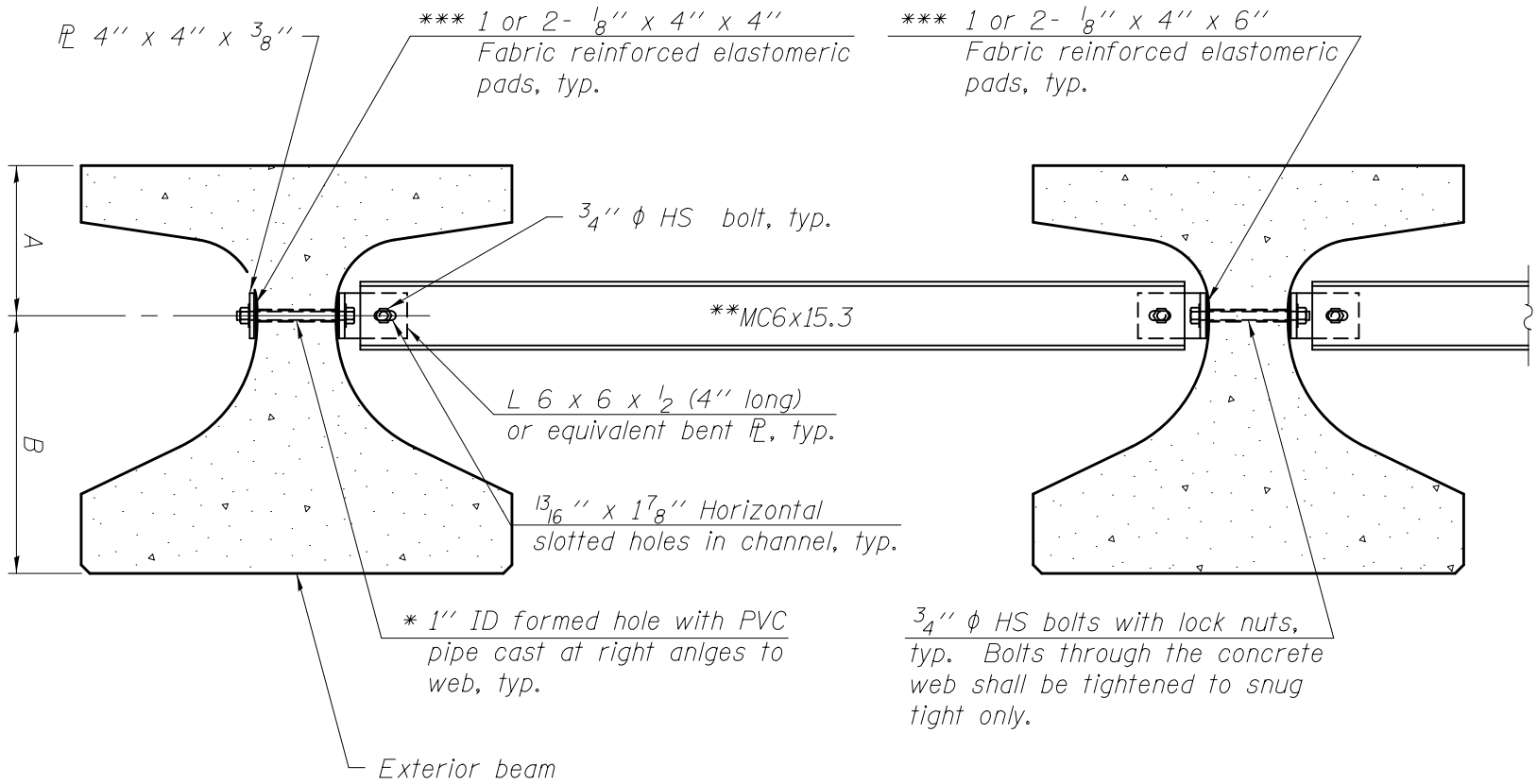

Beam	A	B
IL27	11 1/4''	1'-3 3/4''
IL36	1'-1 1/4''	1'-10 3/4''

Notes:

All material for bracing shall be hot dip galvanized according to AASHTO M111 unless otherwise noted.

Two hardened washers are required for each set of oversized holes.

All holes shall be 15/16'' ϕ unless otherwise noted.

5/16'' x 3'' x 3'' plate washers are required over all slotted holes.

All bolts shall be galvanized according to AASHTO M232.

Bracing shall be installed as beams are erected and tightened as soon as possible during erection.

Permanent bracing shall not be paid for separately, but shall be included in the cost of Furnishing and Erecting Precast Prestressed Concrete Beams.

* Fabricator shall locate to miss strands within permissible tolerances.

** Alternate MC6x18 channels are permitted to facilitate material acquisition.

*** Place pads as necessary to provide a flat mounting surface between the steel and concrete

PERMANENT BRACING DETAILS
FOR IL27 & IL36 BEAMS

Figure 30

Beam	A	B
IL45	1'-3"	2'-0"
IL54	1'-7"	2'-5"

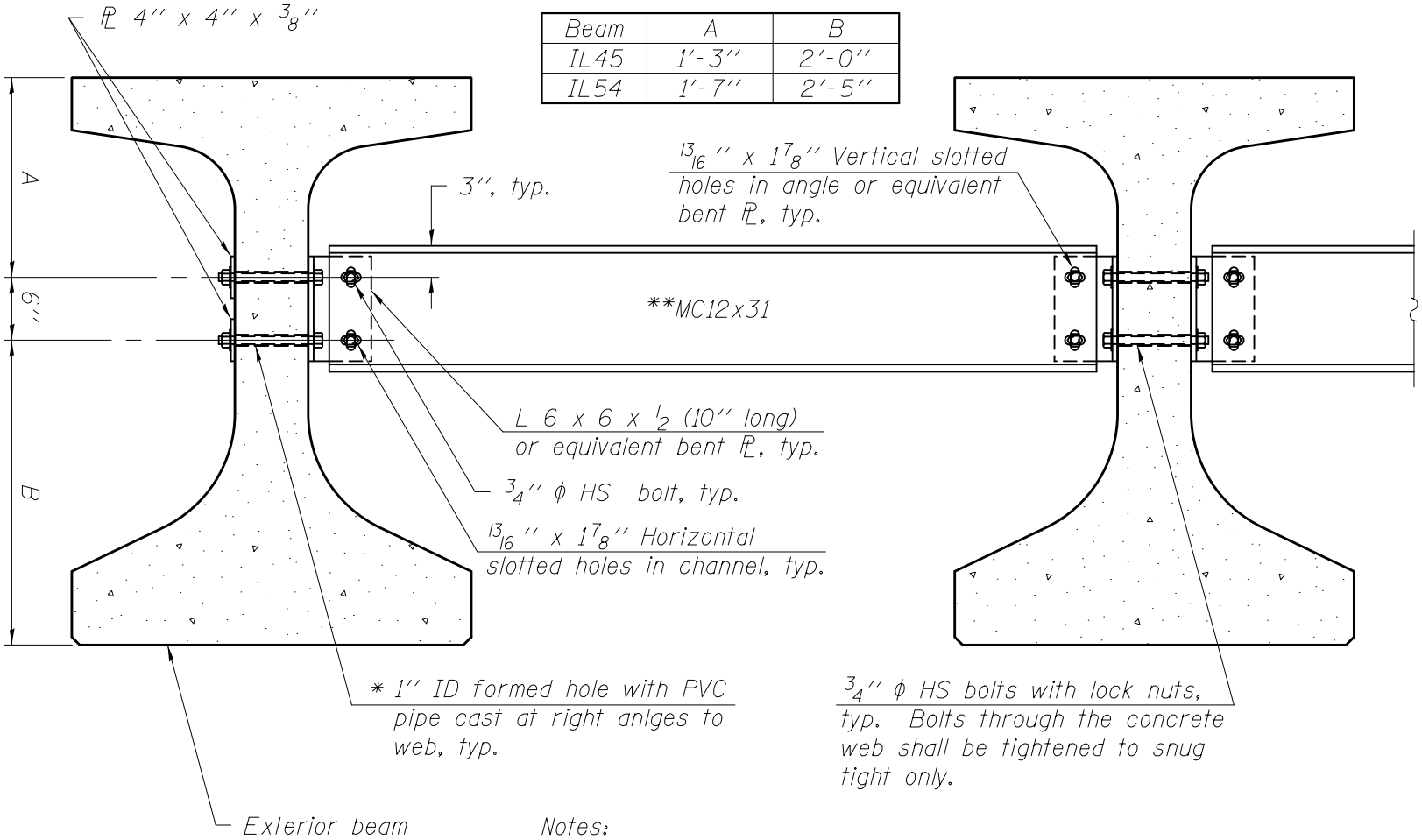

* Fabricator shall locate to miss strands within permissible tolerances.

** Alternate MC12x35 channels are permitted to facilitate material acquisition.

Notes:

All material for bracing shall be hot dip galvanized according to AASHTO M111 unless otherwise noted.

Two hardened washers are required for each set of oversized holes.

All holes shall be 15/16" ϕ unless otherwise noted.

5/16" x 3" x 3" plate washers are required over all slotted holes.

All bolts shall be galvanized according to AASHTO M232.

Bracing shall be installed as beams are erected and tightened as soon as possible during erection.

Permanent bracing shall not be paid for separately, but shall be included in the cost of Furnishing and Erecting Precast Prestressed Concrete Beams.

PERMANENT BRACING DETAILS FOR IL45 & IL54 BEAMS

Figure 31

Beam	A	B
IL63	1'-4"	2'-3"
IL72	1'-8"	2'-8"

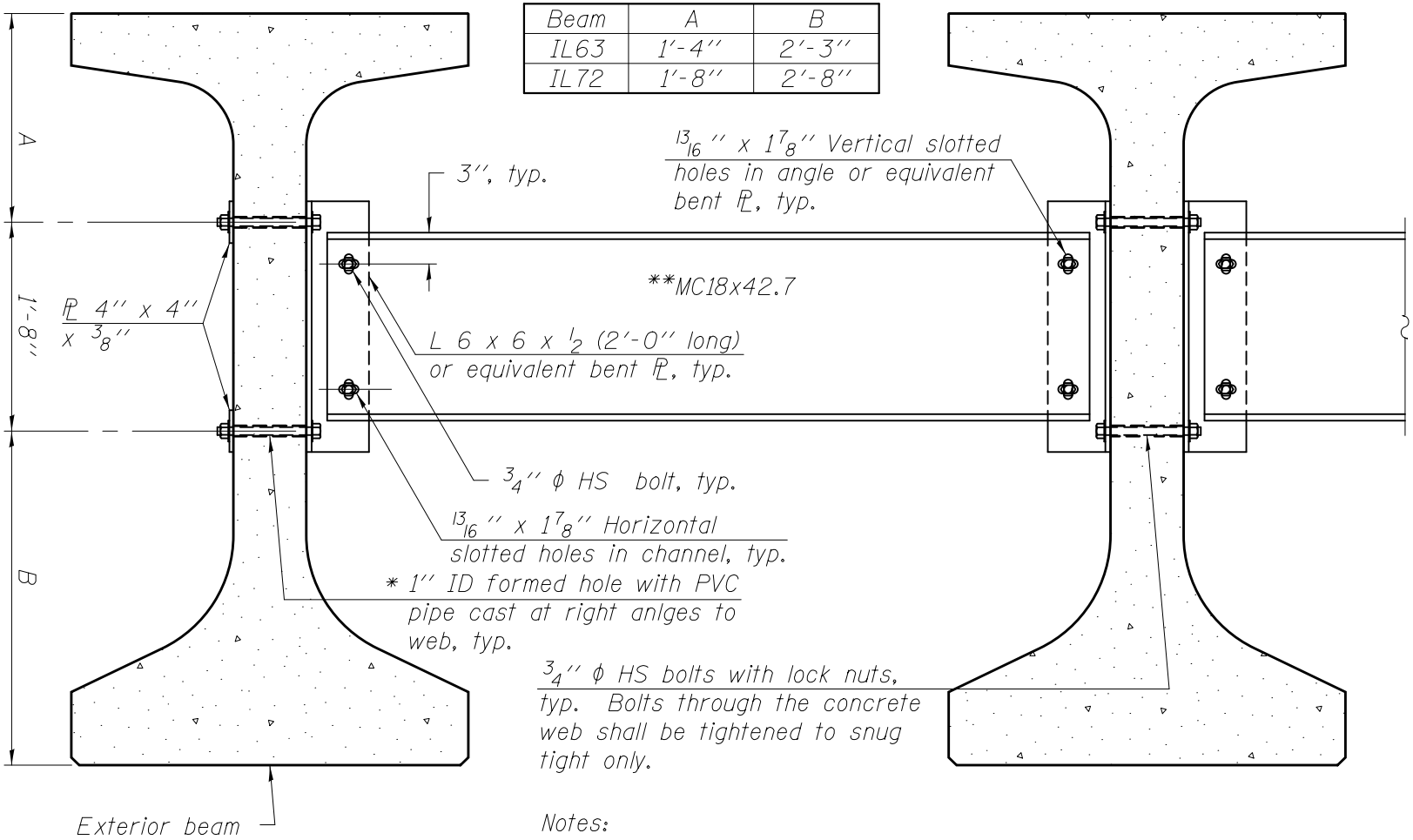

* Fabricator shall locate to miss strands within permissible tolerances.

** Alternate MC18x45.8 channels are permitted to facilitate material acquisition.

Notes:

All material for bracing shall be hot dip galvanized according to AASHTO M111 unless otherwise noted.

Two hardened washers are required for each set of oversized holes.

All holes shall be 15/16" ϕ unless otherwise noted.

5/16" x 3" x 3" plate washers are required over all slotted holes.

All bolts shall be galvanized according to AASHTO M232.

Bracing shall be installed as beams are erected and tightened as soon as possible during erection.

Permanent bracing shall not be paid for separately, but shall be included in the cost of Furnishing and Erecting Precast Prestressed Concrete Beams.

PERMANENT BRACING DETAILS FOR IL63 & IL72 BEAMS

Figure 32

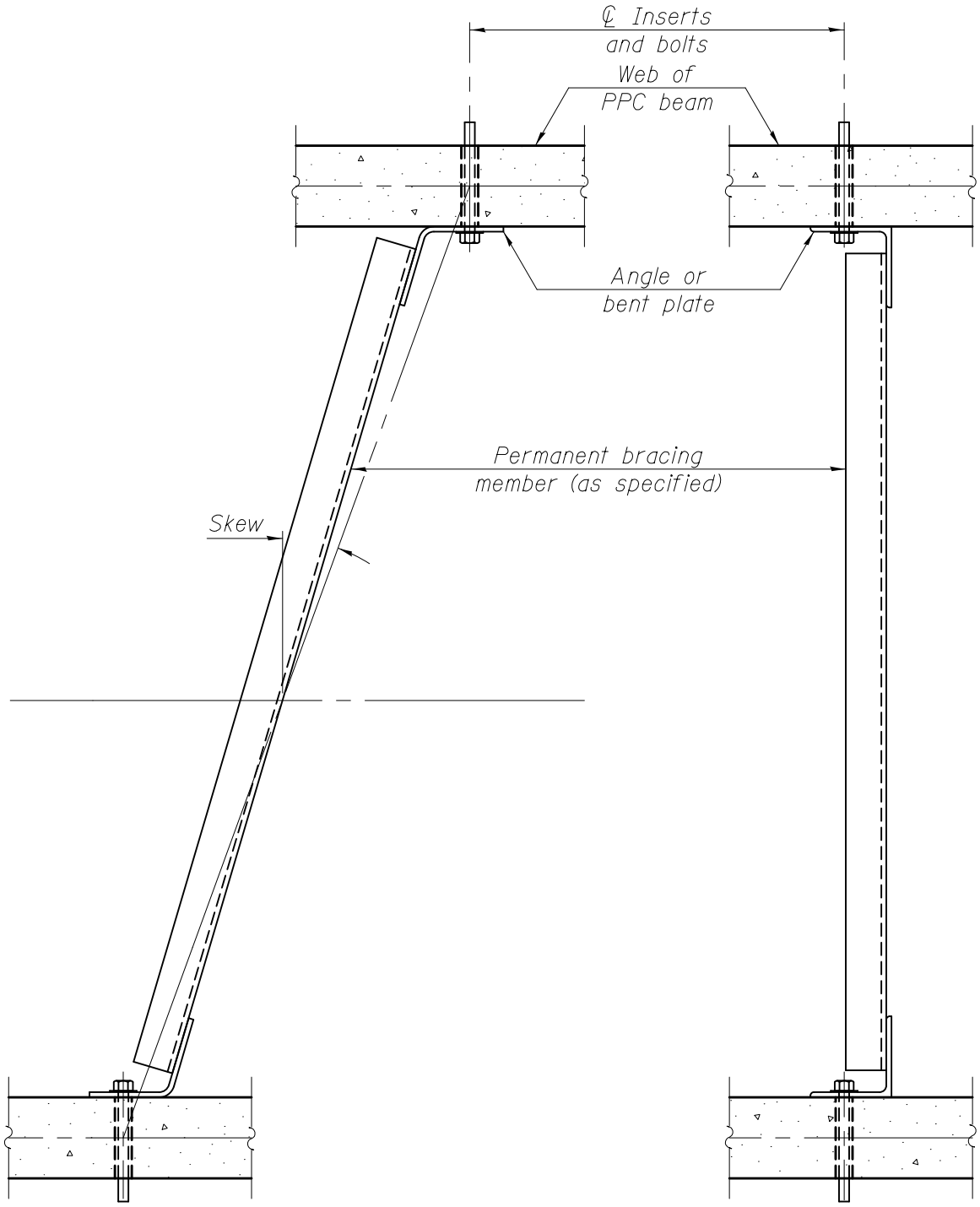

PLAN
(When skewed bracing
is specified)

PLAN
(When 90° bracing
is specified)

PERMANENT BRACING
FOR PPC BEAMS

Figure 33

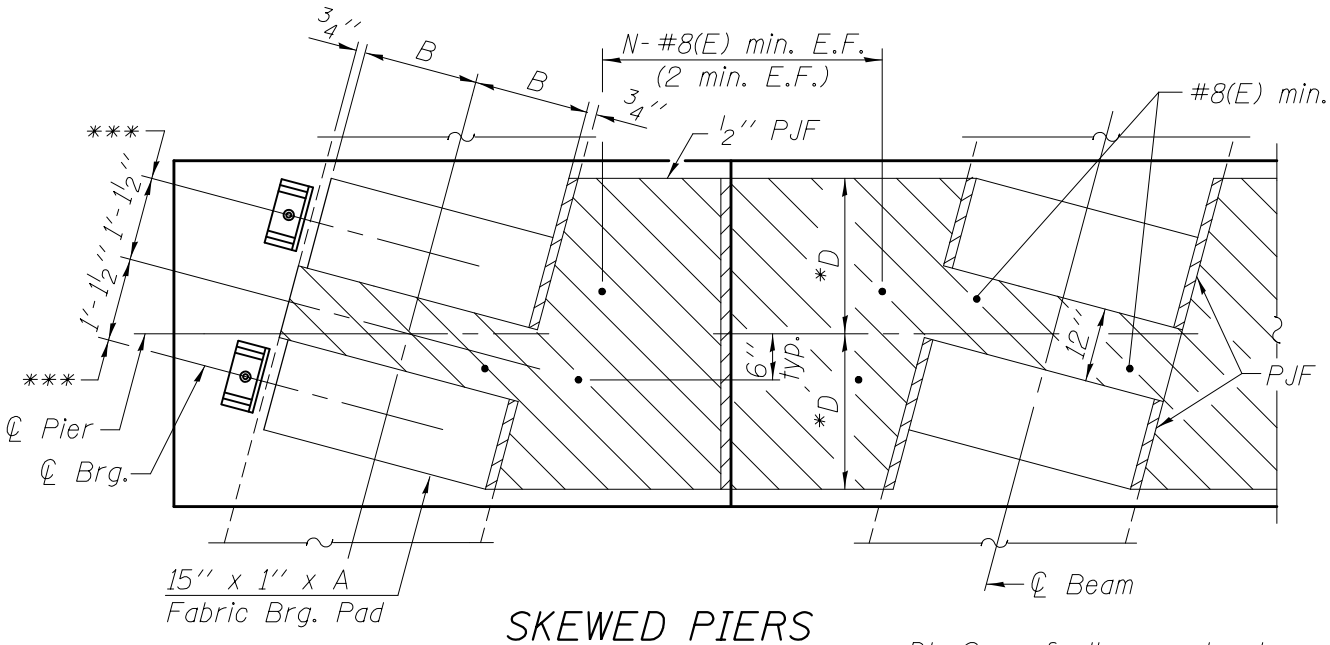

SKEWED PIERS

DL=Sum of all superstructure dead loads at the given pier under consideration (kips).

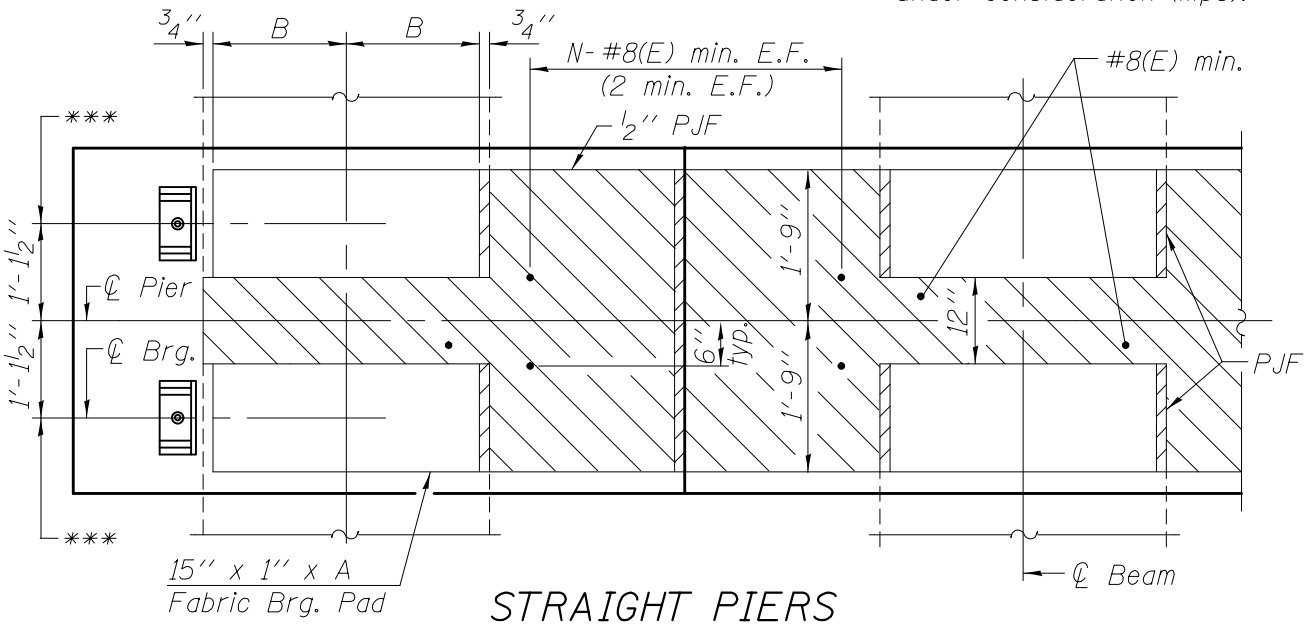

STRAIGHT PIERS

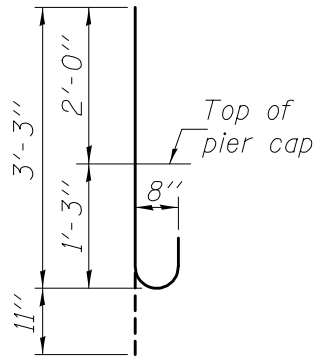

#8(E) (MIN.) DOWEL BAR

*See Fig. 3.4.10-5

$$**N = \frac{1}{2}\left[\frac{.2\ DL}{28.3\ (S)} - 2\right]$$

S=No. of beam spaces

**Equation only valid for #8(E) bars.

***℄ 1 1/2'' ϕ x 18'' Anchor bolts with 3''x 3''x 5/16'' ℙ washer under nut. Holes in cap to be formed or drilled after beams are in place but prior to pouring concrete diaphragm.

A = Bott. flange width - 1 1/2''
B = A/2

FIXED PIER DETAILS FOR IL-BEAMS

Figure 34

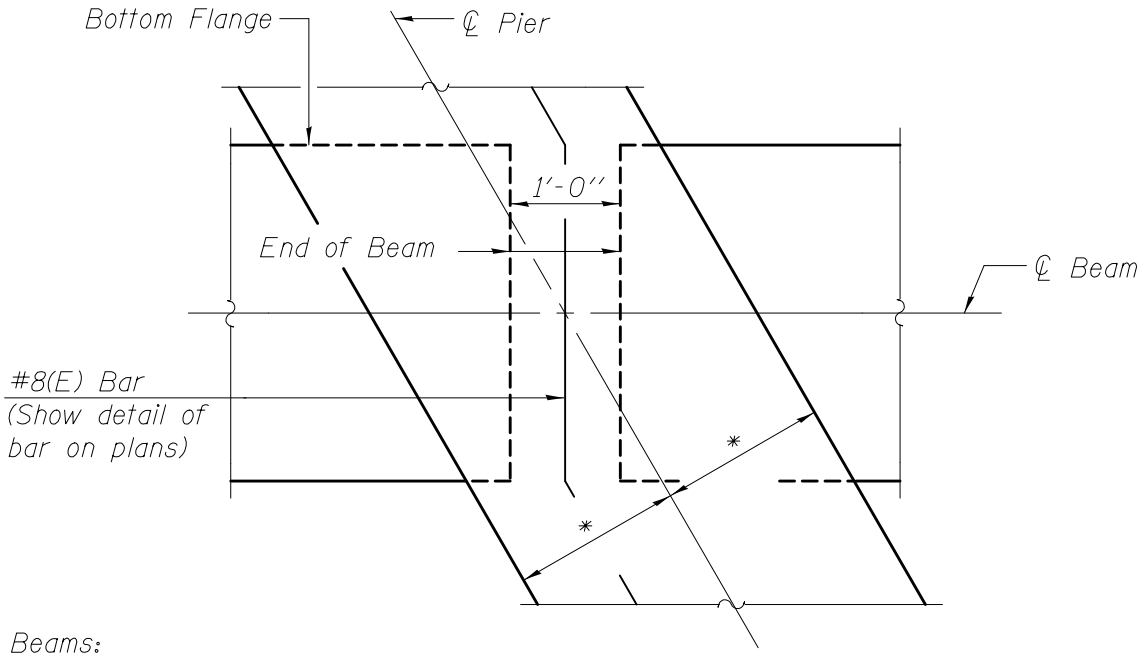

* For IL27 Beams:
Use 2'-0'' up to 10° skew
Use 2'-2'' over 10° skew
For IL36 thru IL72 Beams:
Use 2'-0'' up to 10° skew
Use 2'-2'' for skews between 10° and 20°
Use 2'-4'' for skews over 20°

SKEWED DIAPHRAGM

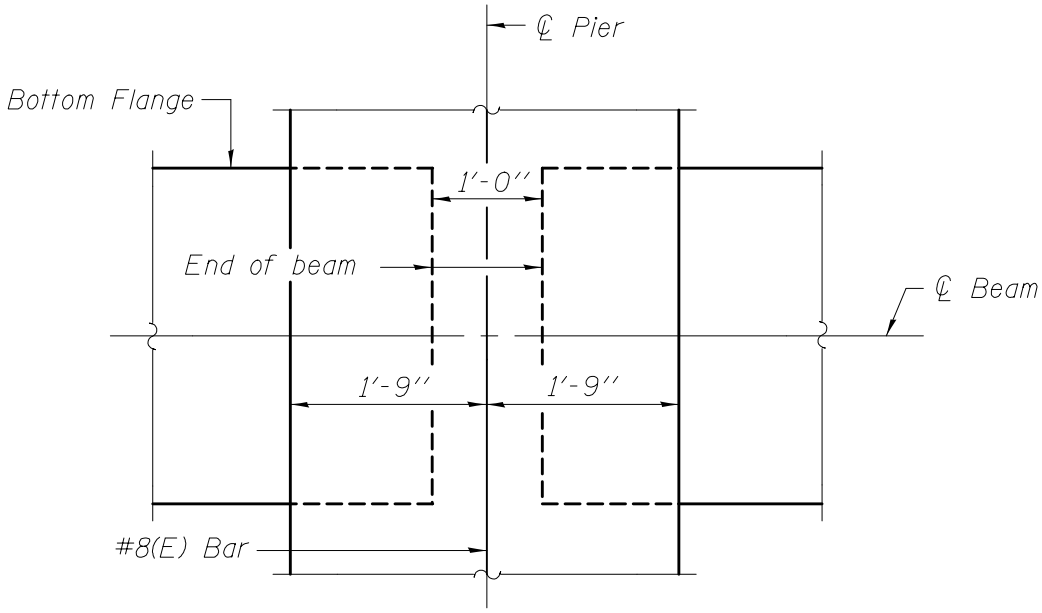

RT. ANGLE DIAPHRAGM

DIAPHRAGM DIMENSIONS
AT PIERS FOR IL-BEAMS

Figure 35

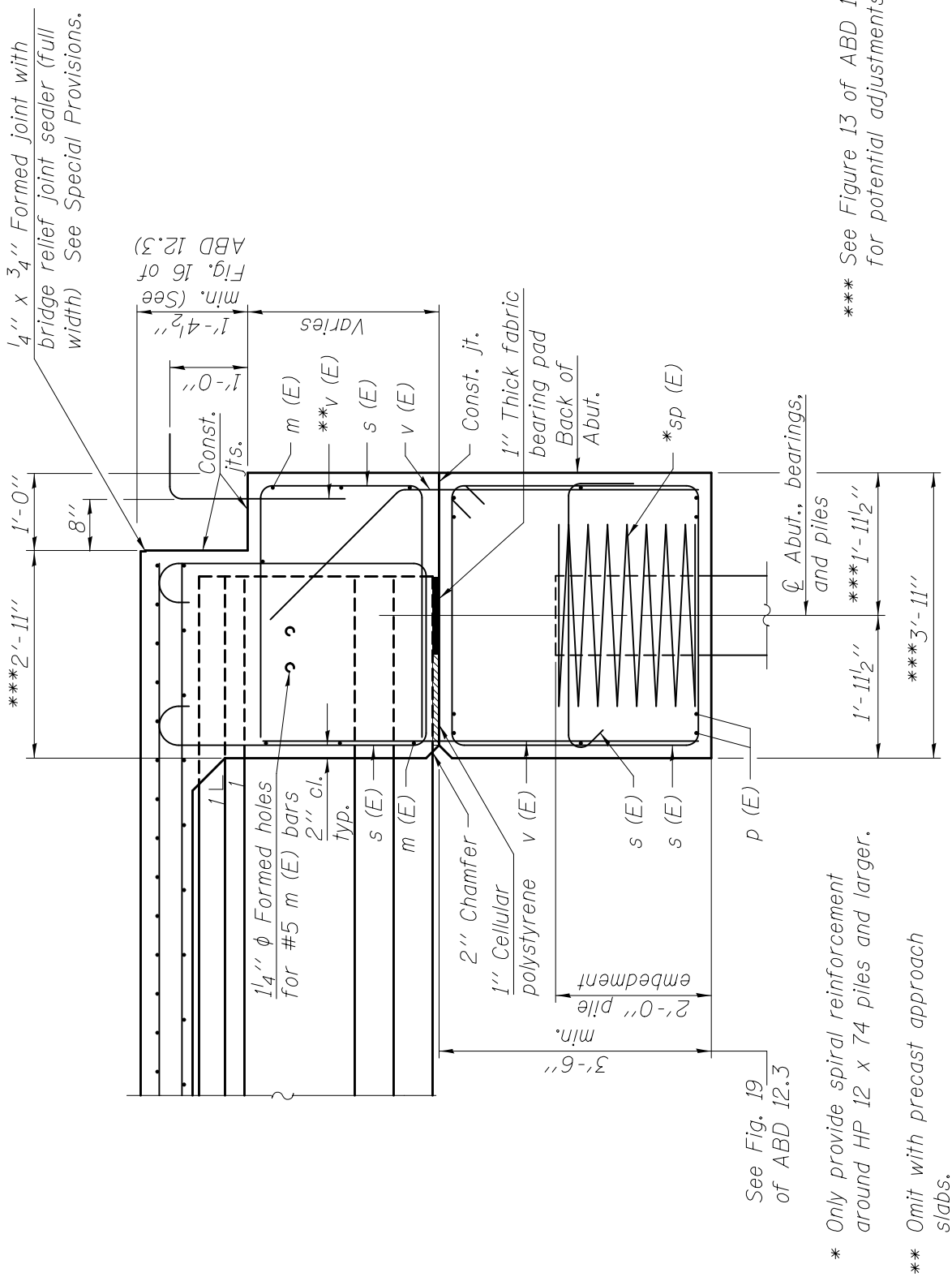

INTEGRAL ABUTMENT FOR PPC IL-BEAMS 27'' & 36''

Figure 36

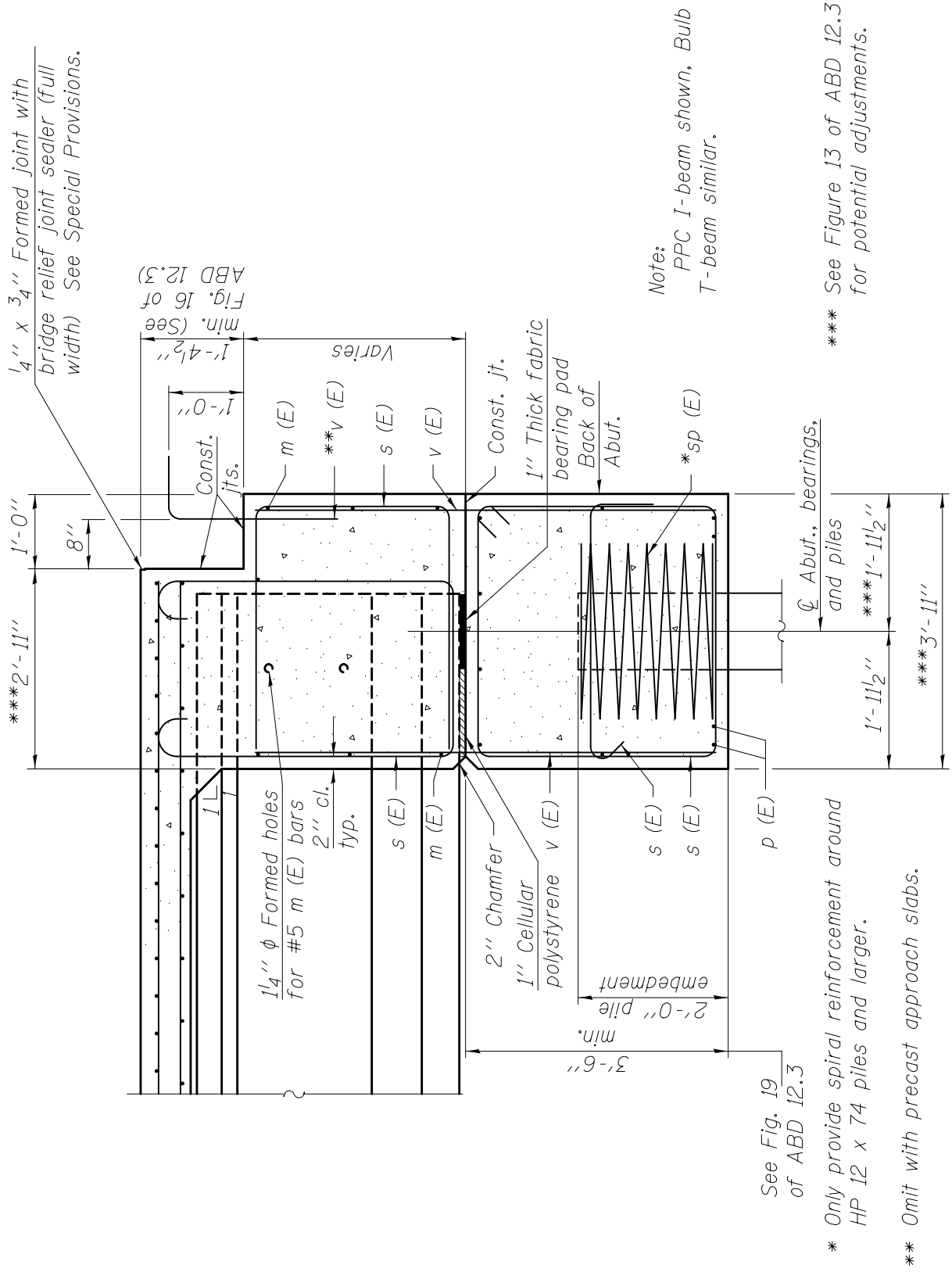

INTEGRAL ABUTMENT FOR PPC IL-BEAMS 45'' THRU 72''

Figure 37

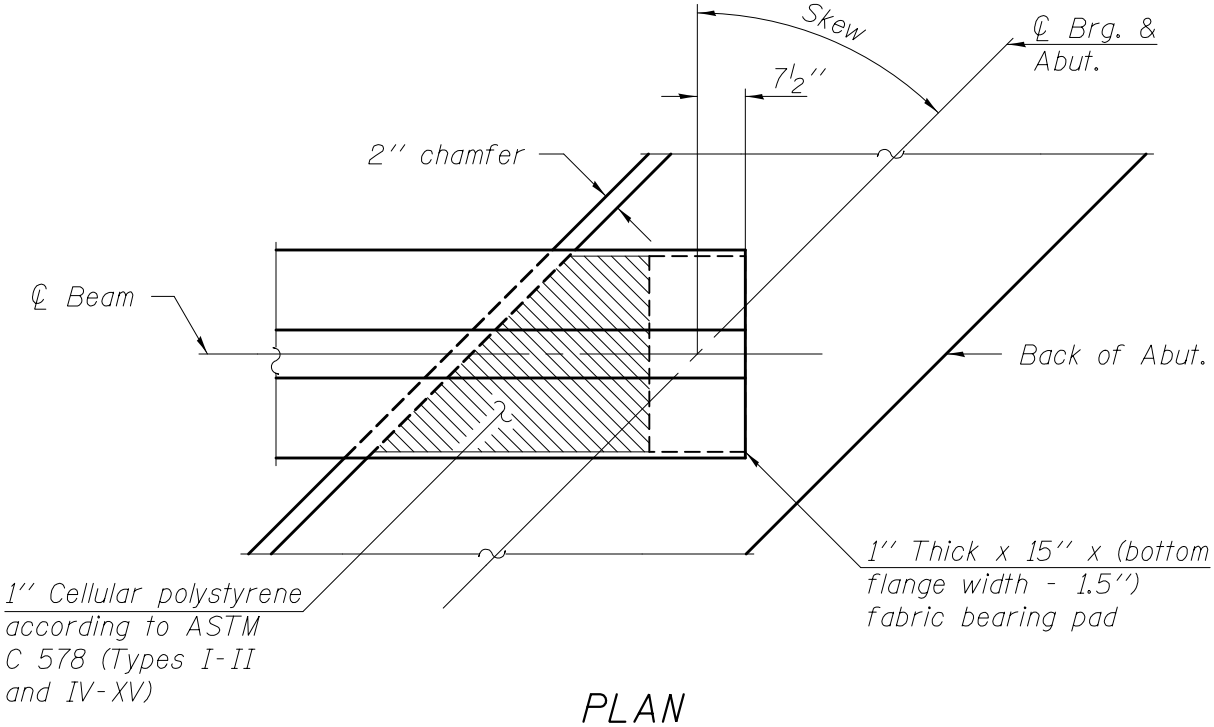

PLAN

(Showing bottom flange of PPC IL-beam at integral abutment)

INTEGRAL ABUTMENT
BEAM LOCATION

Figure 38

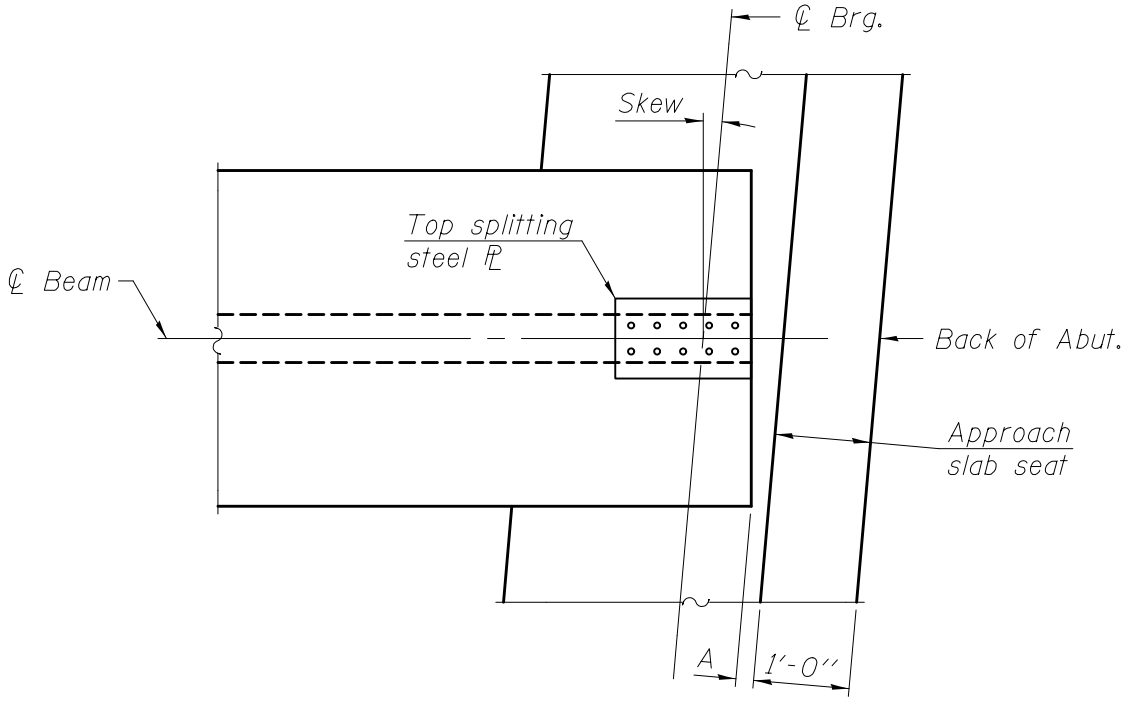

TOP FLANGE PLAN - NO CLIP

(Showing top flange of Bulb T-beam at integral abutment. PPC IL-beams similar)

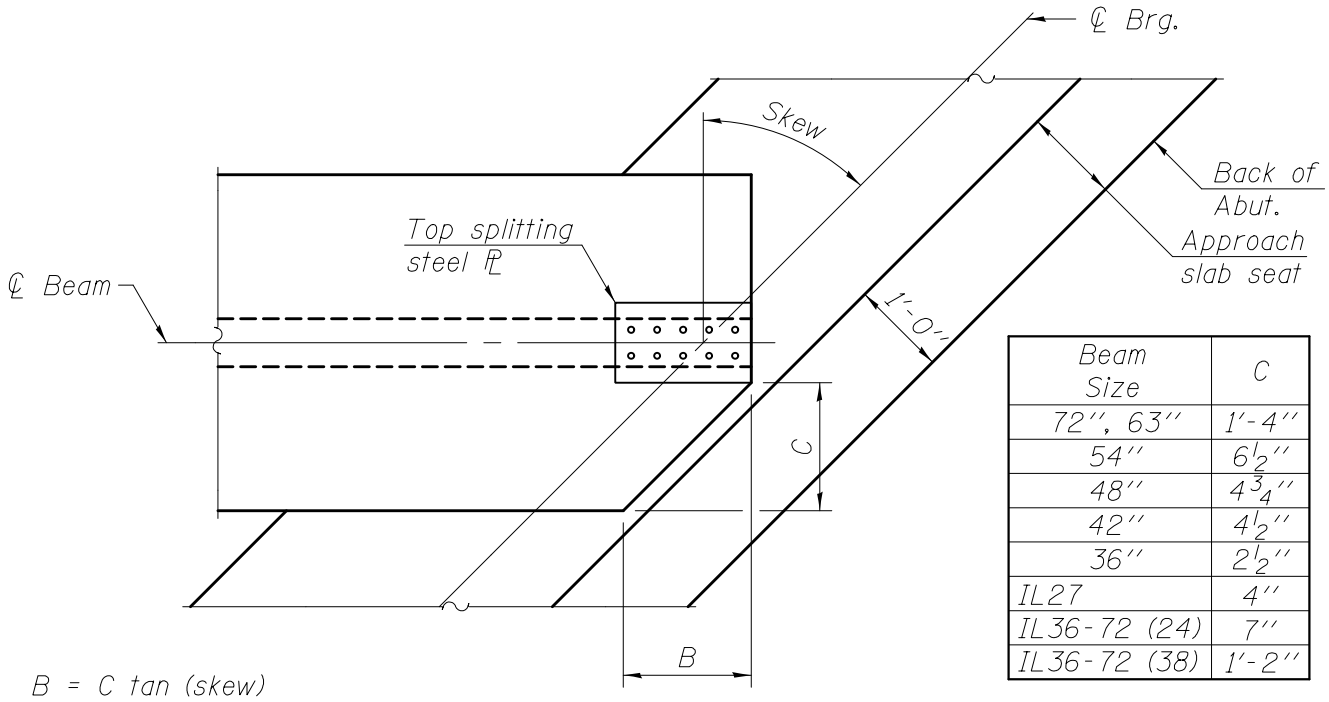

Beam Size	C
72'', 63''	1'-4''
54''	6½''
48''	4¾''
42''	4½''
36''	2½''
IL27	4''
IL36-72 (24)	7''
IL36-72 (38)	1'-2''

B = C tan (skew)

TOP FLANGE PLAN - CLIPPED

(Showing top flange of Bulb T-beam at integral abutment. PPC IL-beams similar)

Note:
Clip top flange when dimension "A" is less than 1''. Calculate dimension "B" based on skew angle. Dimension "C" is provided in table.

TOP FLANGE CLIP DETAIL FOR PPC IL-BEAMS ON INTEGRAL ABUTMENTS

Figure 39

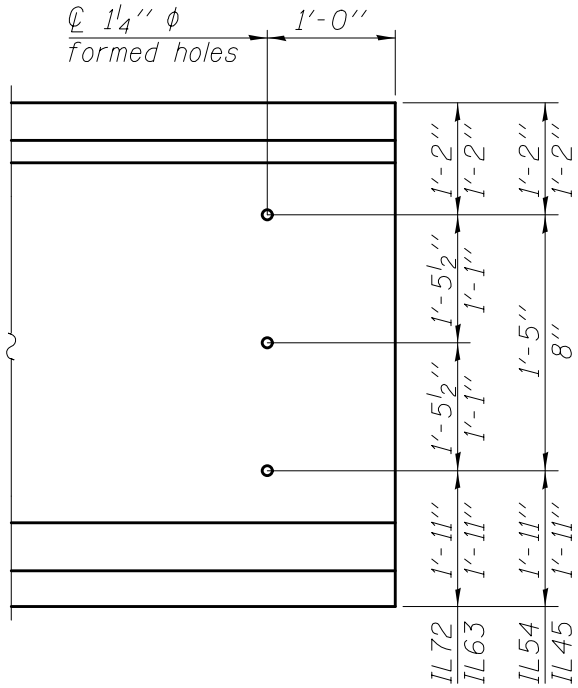

END ELEVATION

(IL45 thru IL72)

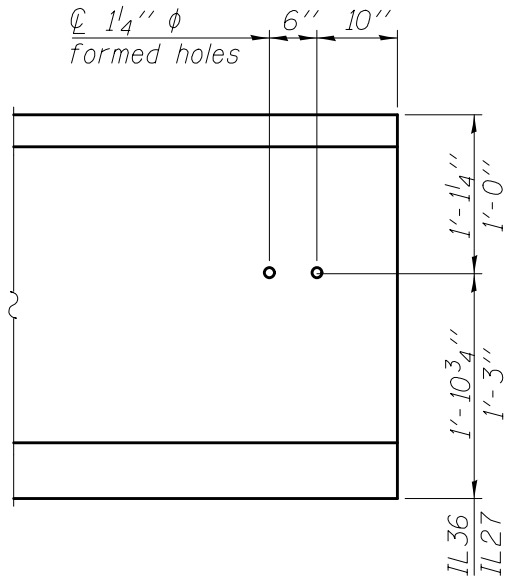

END ELEVATION

(IL27 and IL36)

Note: Adjust these dimensions to miss draped strands.

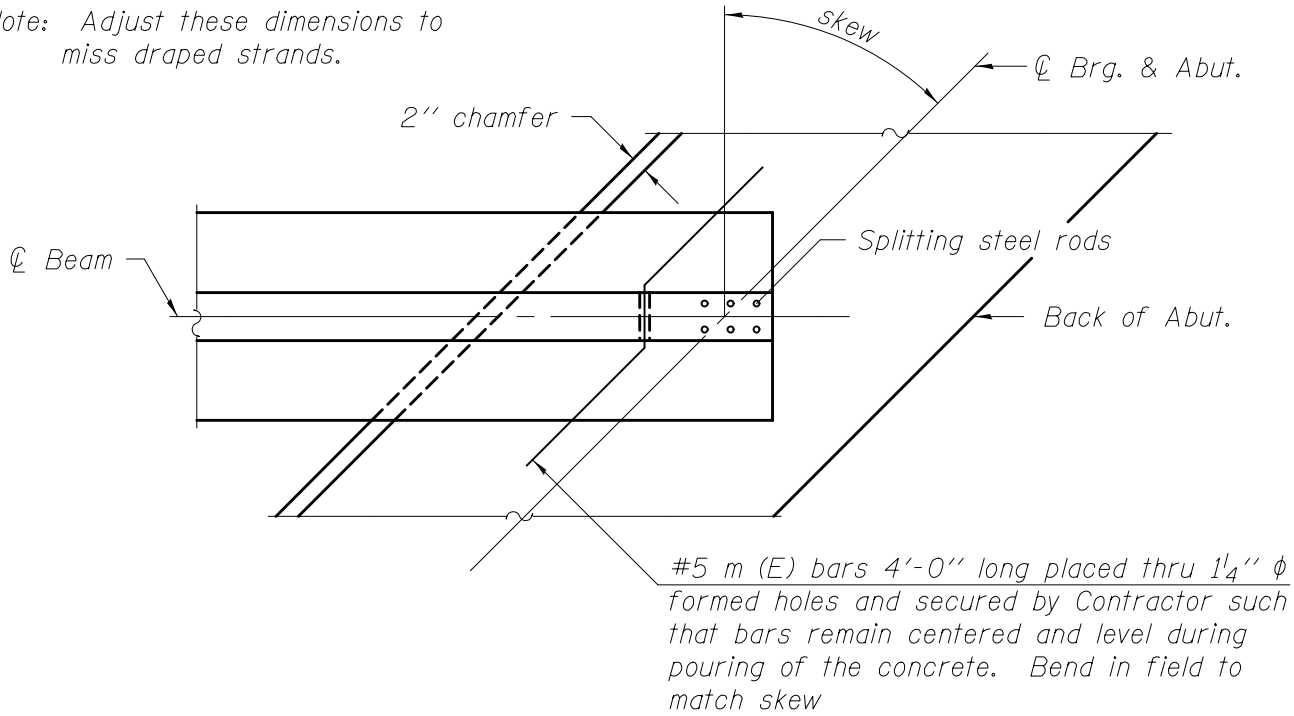

PLAN

(Showing bottom flange of IL45 thru IL72 at integral abutment, IL27 & IL36 similar)

PPC IL-BEAM TO DIAPHRAGM CONNECTION DETAIL FOR INTEGRAL ABUTMENTS

Figure 40

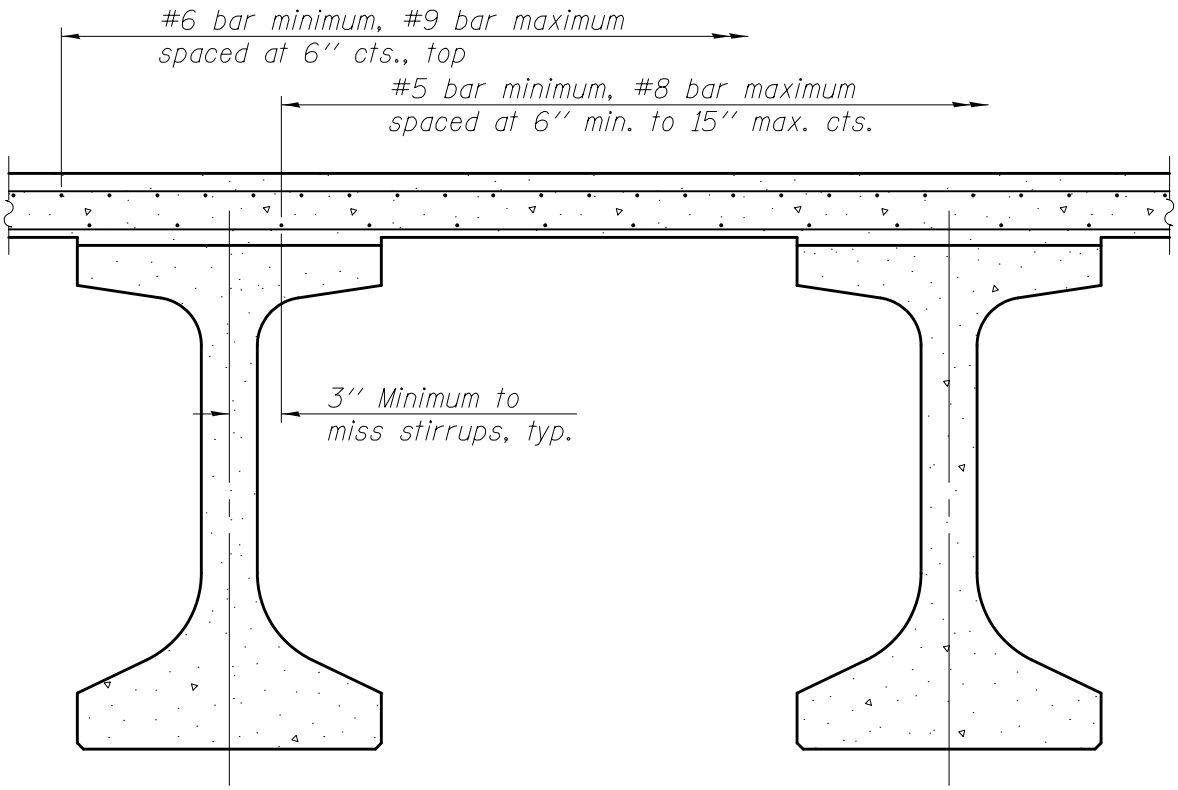

CROSS SECTION
AT PIER

Note:
Top longitudinal reinforcement shall always be spaced at 6'' centers. These bars shall be cut off and reduced to #5 bars at 12'' at the appropriate locations from the pier. The bottom longitudinal reinforcement shall be cut off and reduced to #5 bars spaced to match the bottom distribution reinforcement.

LONGITUDINAL REINFORCEMENT
CONFIGURATION AT PIERS FOR
MULTI-SPAN PPC BEAM BRIDGES

Figure 41

Longitudinal steel in top of slab = #5 bars at 12'' cts. plus additional steel over piers.
Longitudinal steel in bottom of slab = 67% of the main bottom reinforcement.

See Fig. 3.2.1-2 for Design Span, S, Definitions.

EXAMPLE

Given: Beam Space = 7'-0'', b_f = 12'' (Steel Beam)
S (Bottom Reinforcement) = 7.0'
S (Top Reinforcement) = 7-½(1') = 6.5'
Enter chart at S = 7.0' and project line vertically to bott. reinforcement line. Then project horizontally to get required spacing for bott. reinforcement, #5 @ 10'' cts.
Enter chart at S = 6.5' and project line vertically to top reinforcement line. Then project line horizontally to get required spacing for top reinforcement, #5 @ 6'' cts.

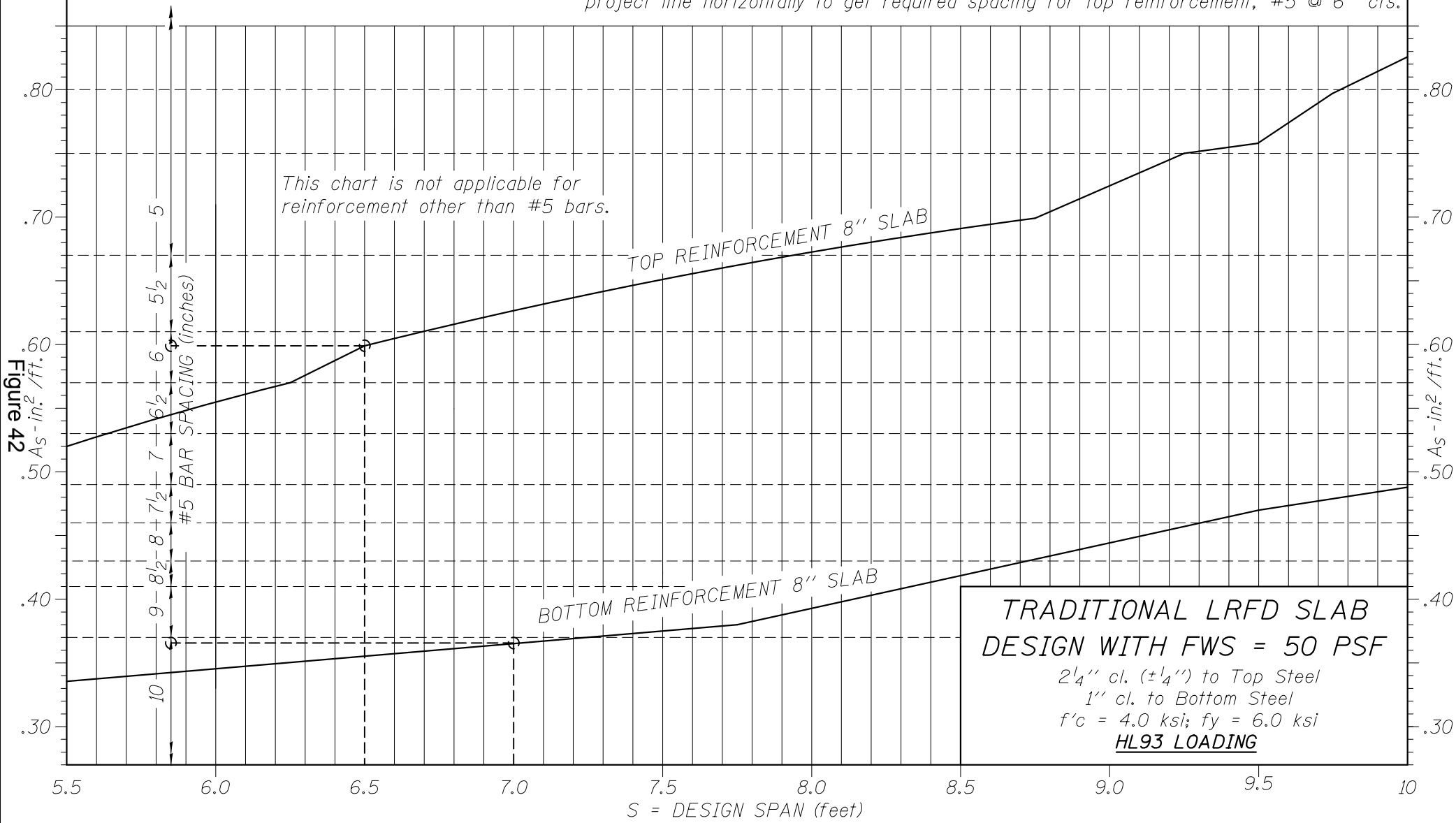

Figure 42

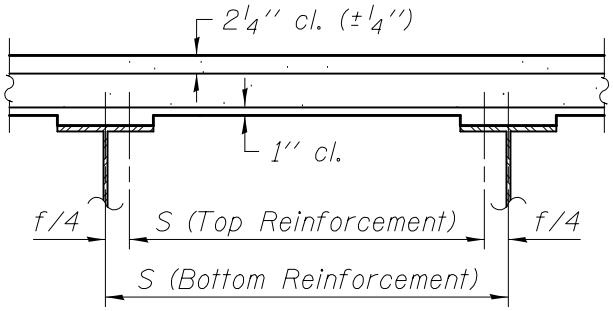

STEEL STRINGER

f = Top flange width

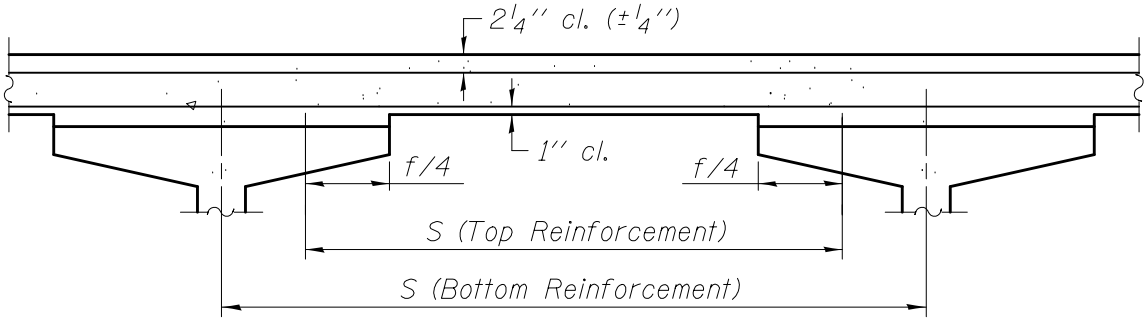

PRESTRESSED BULB-T & IL BEAMS

f = Top flange width

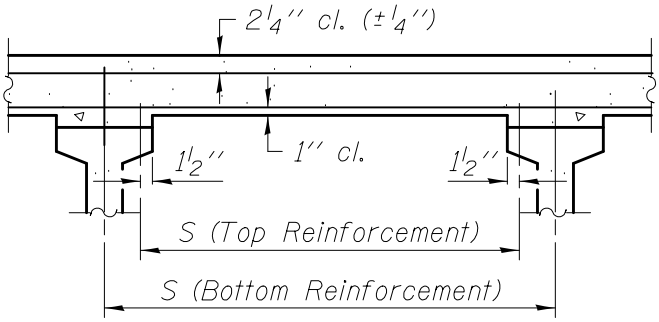

PRESTRESSED I-BEAM

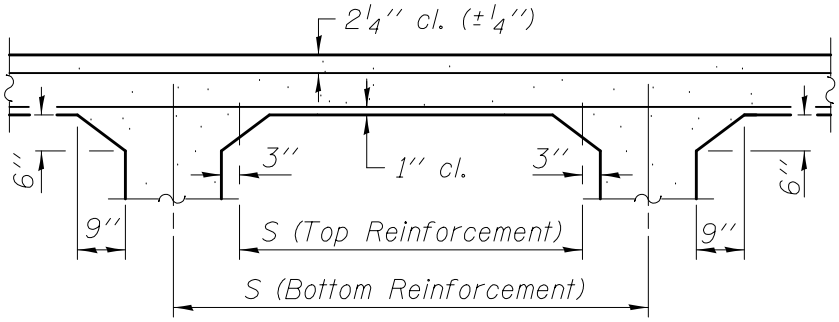

CONCRETE GIRDER

DESIGN SPAN
DEFINITIONS
FOR LRFD SLAB DESIGN

Figure 43