Illinois Department of Transportation

Memorandum

To:	ALL BRIDGE DESIGNERS	19.1
From:	D. Carl Puzey	
Subject:	Constant-Slope Parapet Update	
Date:	January 11, 2019	

All Bridge Designers memorandum ABD 18.1, issued June 15, 2018, launched a new Constant-Slope bridge parapet configuration which replaced the previous F-Shape concrete bridge parapet. The Constant-Slope parapet satisfies the new crash loads and barrier height requirements of the AASHTO 2016 Manual for Assessing Safety Hardware (MASH). The reinforcement details presented in that memorandum were for conventional wet cast construction. This memorandum introduces new reinforcement details which are suitable for both wet cast and slip form construction. The details of this ABD memorandum shall supersede the details of ABD memorandum 18.1.

The 39-inch tall, TL-4 constant -slope parapet replaces the 34-inch tall, TL-4 F-Shape parapet and the 44-inch tall, TL-5 constant-slope parapet replaces the 42-inch tall, TL-5 F-Shape parapet. The reinforcement is designed such that additional d(E) reinforcement is not necessary at full depth free edges for either parapet height. Since the new details also accommodate slip form options, base sheet SFP 34-42 has been updated and replaced with base sheet SFP 39-44. Details for light pole attachments have also been provided.

The new parapet details specified in this memorandum shall be effective for projects with TSL's approved on or after February 1, 2019. Additionally, all new permanent parapets on projects let after December 31, 2019, regardless of the TSL approval date, shall be built according to these new constant-slope parapet configurations and details.

The Department's CADD libraries will be updated for the constant-slope parapets in the coming months. Please note that the Temporary Concrete Barrier for Stage Construction Base Sheet (R-27) is not scheduled to be revised within the time lines outlined above. On-going research is investigating additional testing for temporary barrier conditions. If the currently configured temporary concrete barrier is replaced with the constant-slope temporary concrete barrier, a time line for implementation will be coordinated with the industry to transition the inventory. The Type 6 Traffic Barrier Terminal (TBT), Highway Standard 631031, which typically connects to bridge parapets is also scheduled to be updated for the new parapet configurations in the coming months. Planners shall continue to specify the Type 6 TBT on TSL's. Parapet tapers to the TBT may be accomplished in a 2'-0" length.

Please direct questions to Mark Shaffer in the Policies, Standards, and Specifications Unit at (217) 785-2914.

Attachments
KLR/kktABD19.1-20190111

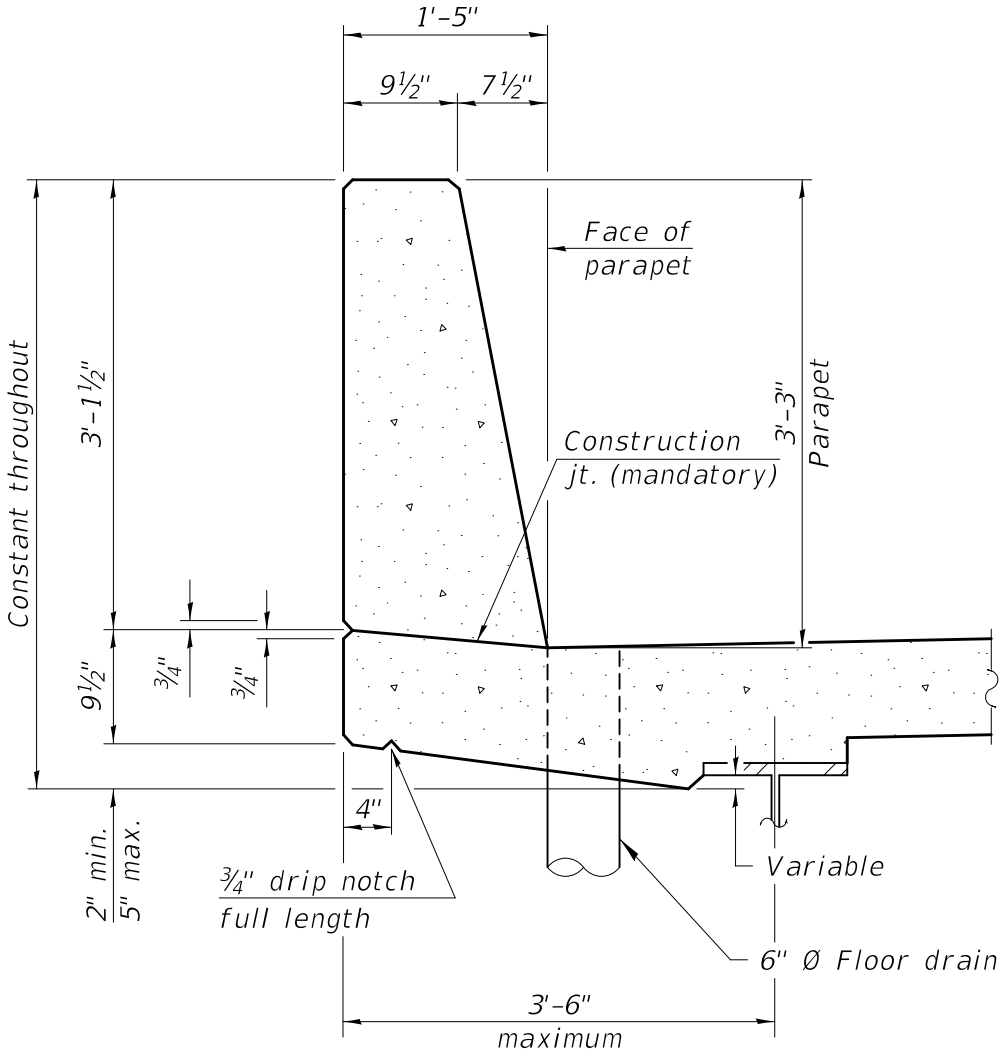

Cross sectional area of parapet = 3.50 ft^2

39" CONSTANT-SLOPE CONCRETE PARAPET CONFIGURATION

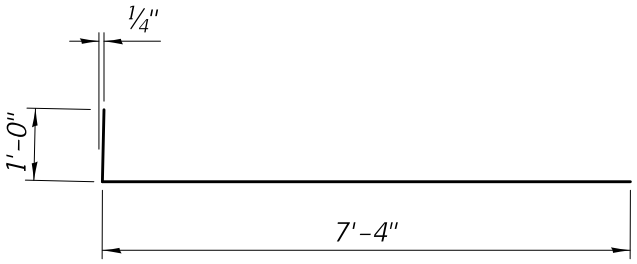

BAR a2(E)

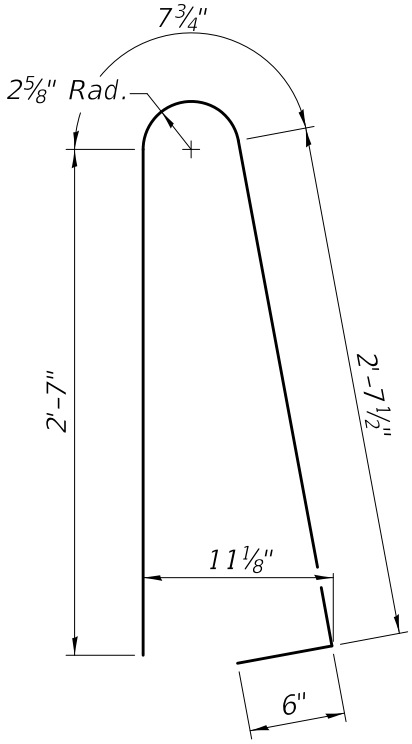

BAR d(E)

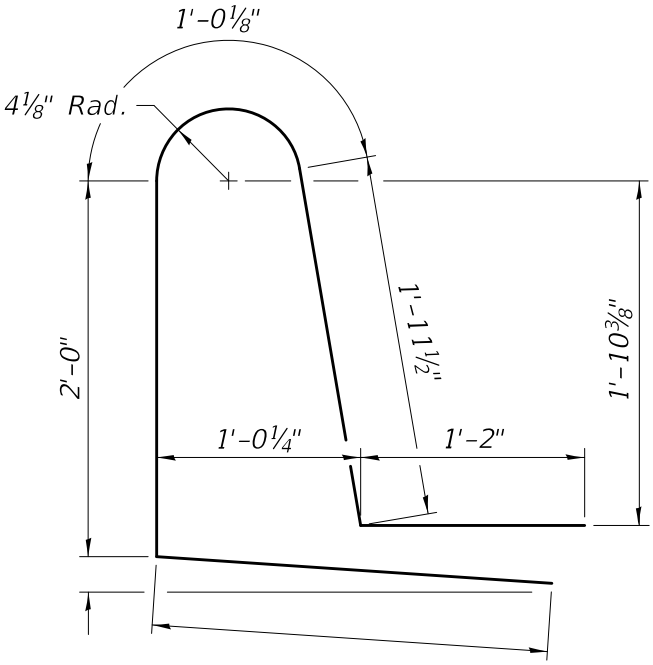

BAR d1(E)

DECK & PARAPET
REINFORCEMENT FOR 39"
CONSTANT-SLOPE PARAPET

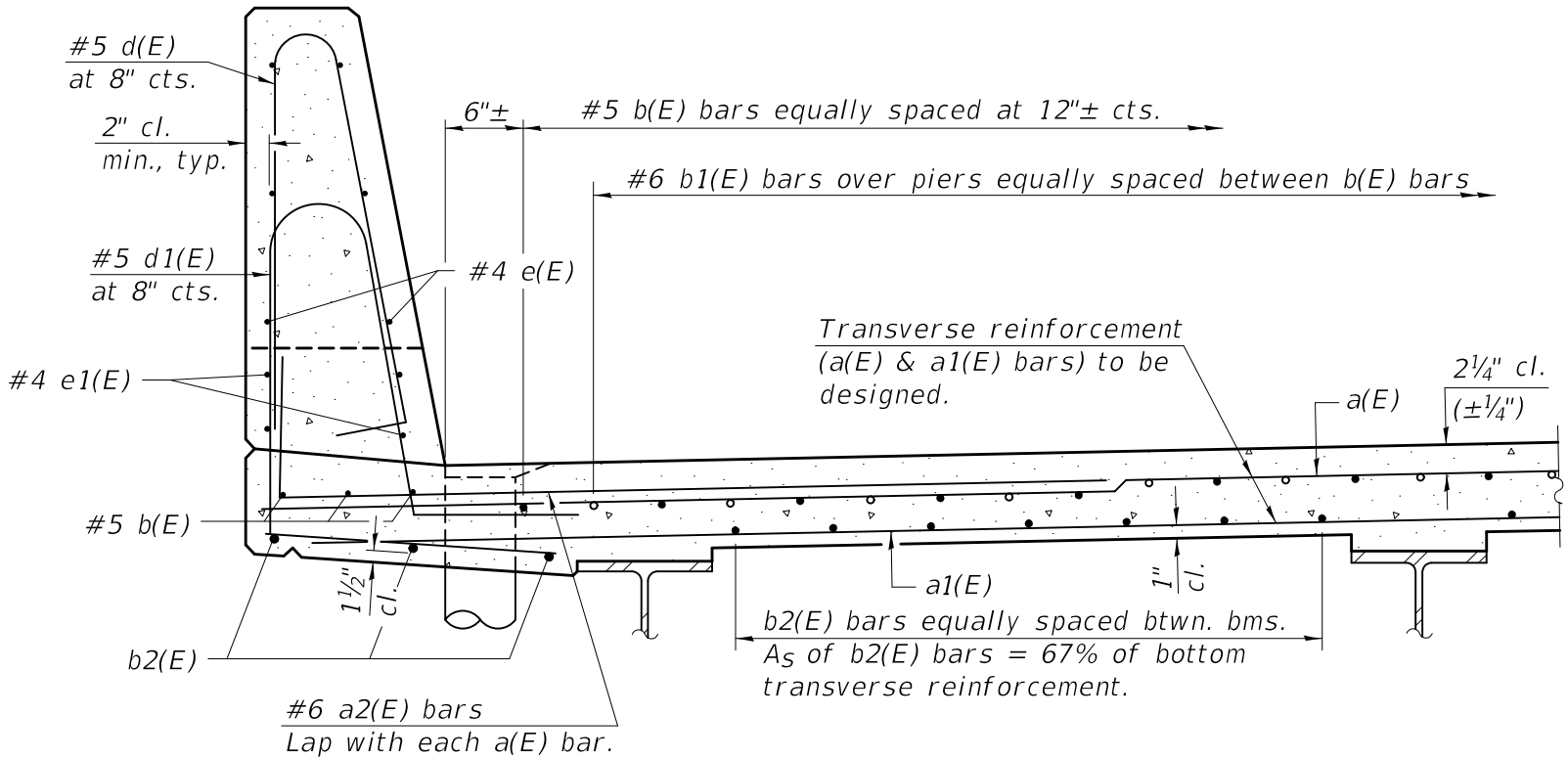

Reinforcement bars designated (E) shall be epoxy coated.

Reinforcement bars shall not pass thru aluminum sheets and cork joint filler.

DECK & PARAPET
REINFORCEMENT FOR 39"
CONSTANT-SLOPE PARAPET

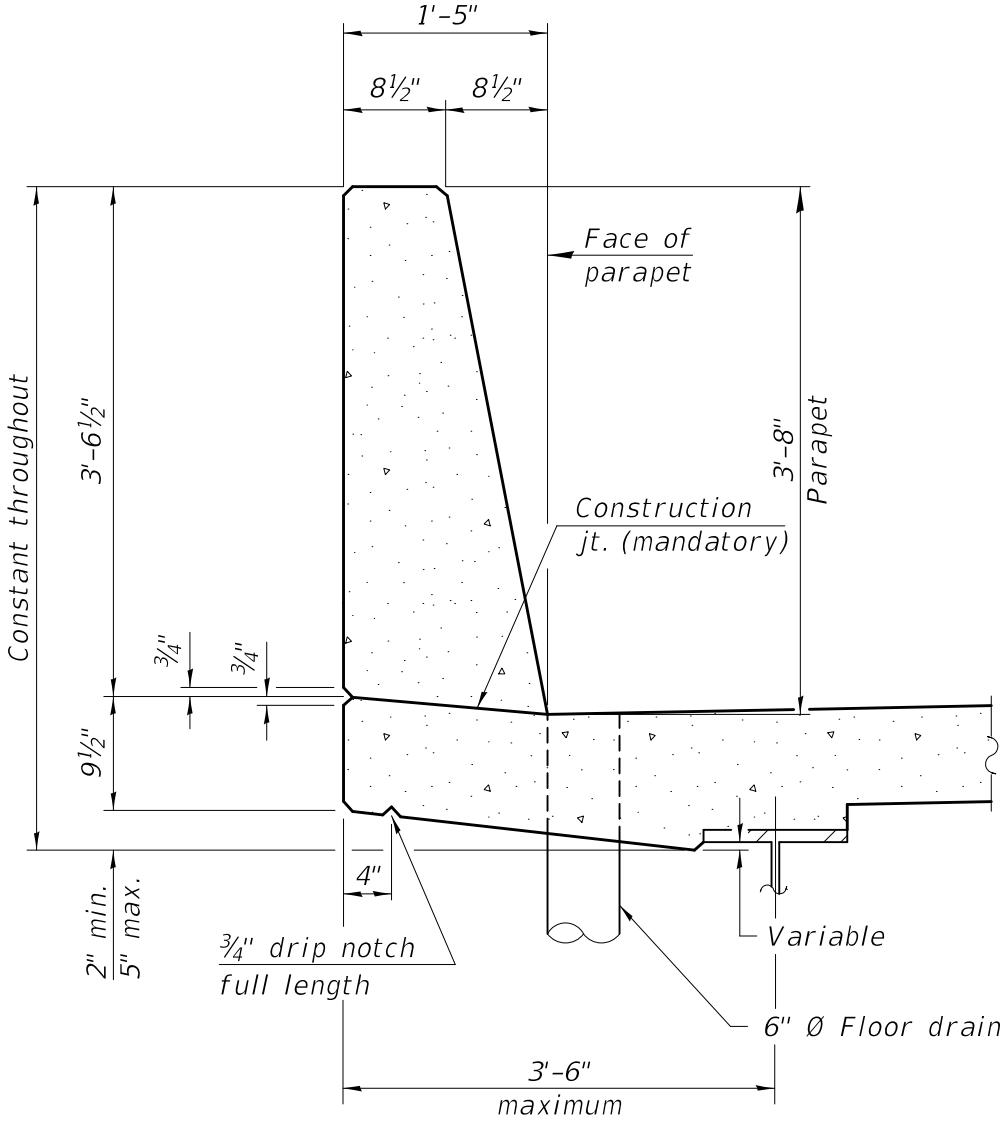

Cross sectional area of parapet = 3.80 ft^2

44" CONSTANT-SLOPE CONCRETE PARAPET CONFIGURATION

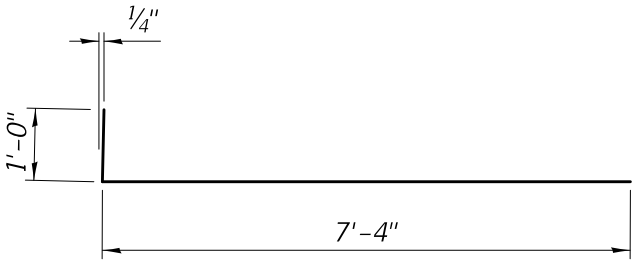

BAR a2(E)

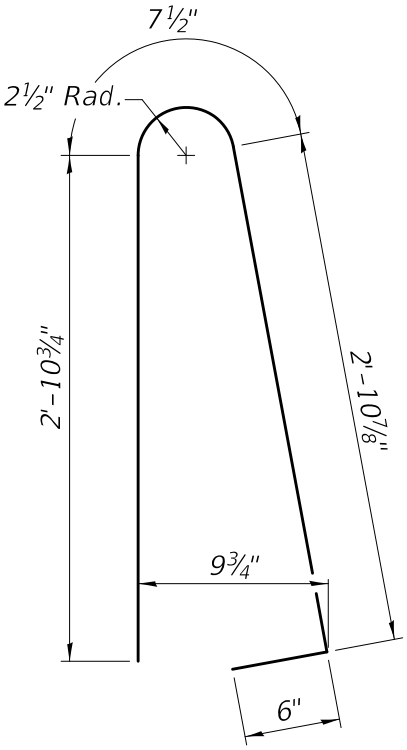

BAR d(E)

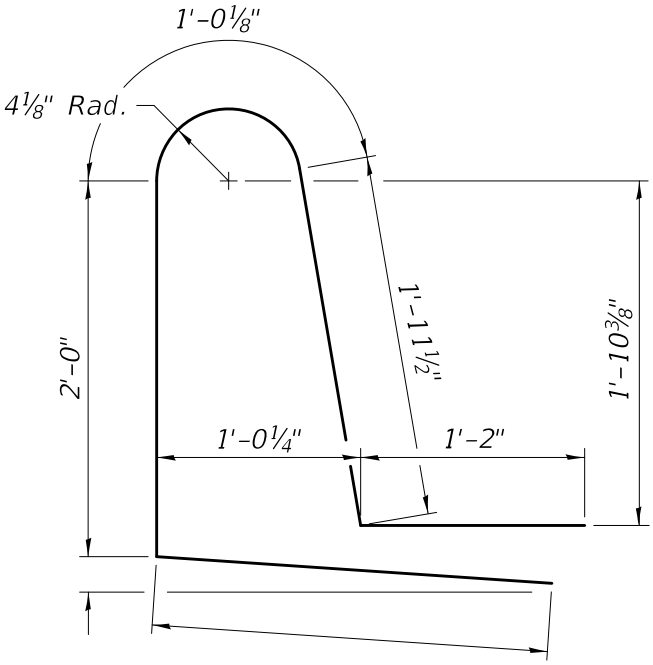

BAR d1(E)

DECK & PARAPET
REINFORCEMENT FOR 44"
CONSTANT-SLOPE PARAPET

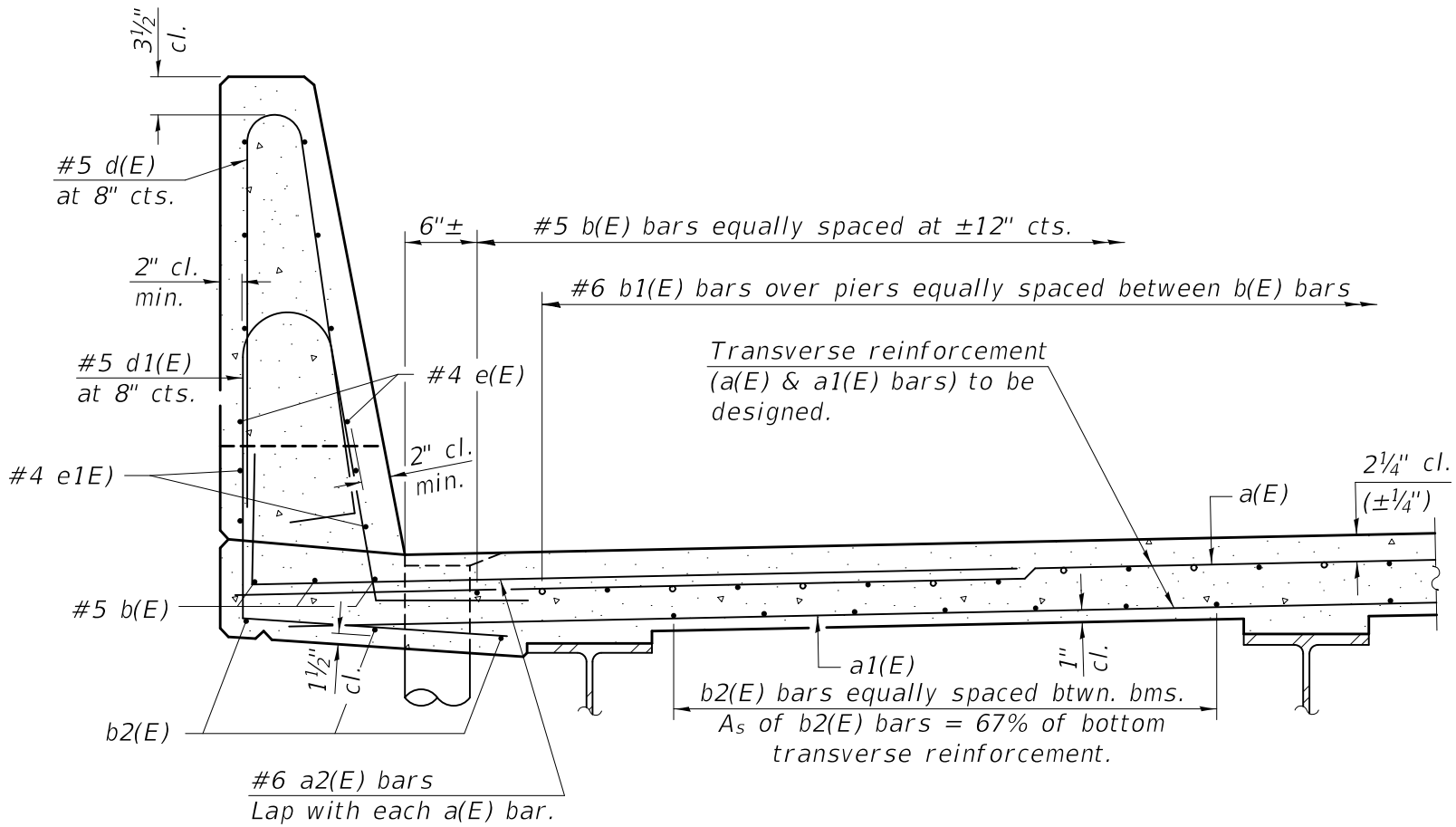

Reinforcement bars designated (E) shall be epoxy coated.

Reinforcement bars shall not pass thru aluminum sheets and cork joint filler.

DECK & PARAPET
REINFORCEMENT FOR 44"
CONSTANT-SLOPE PARAPET

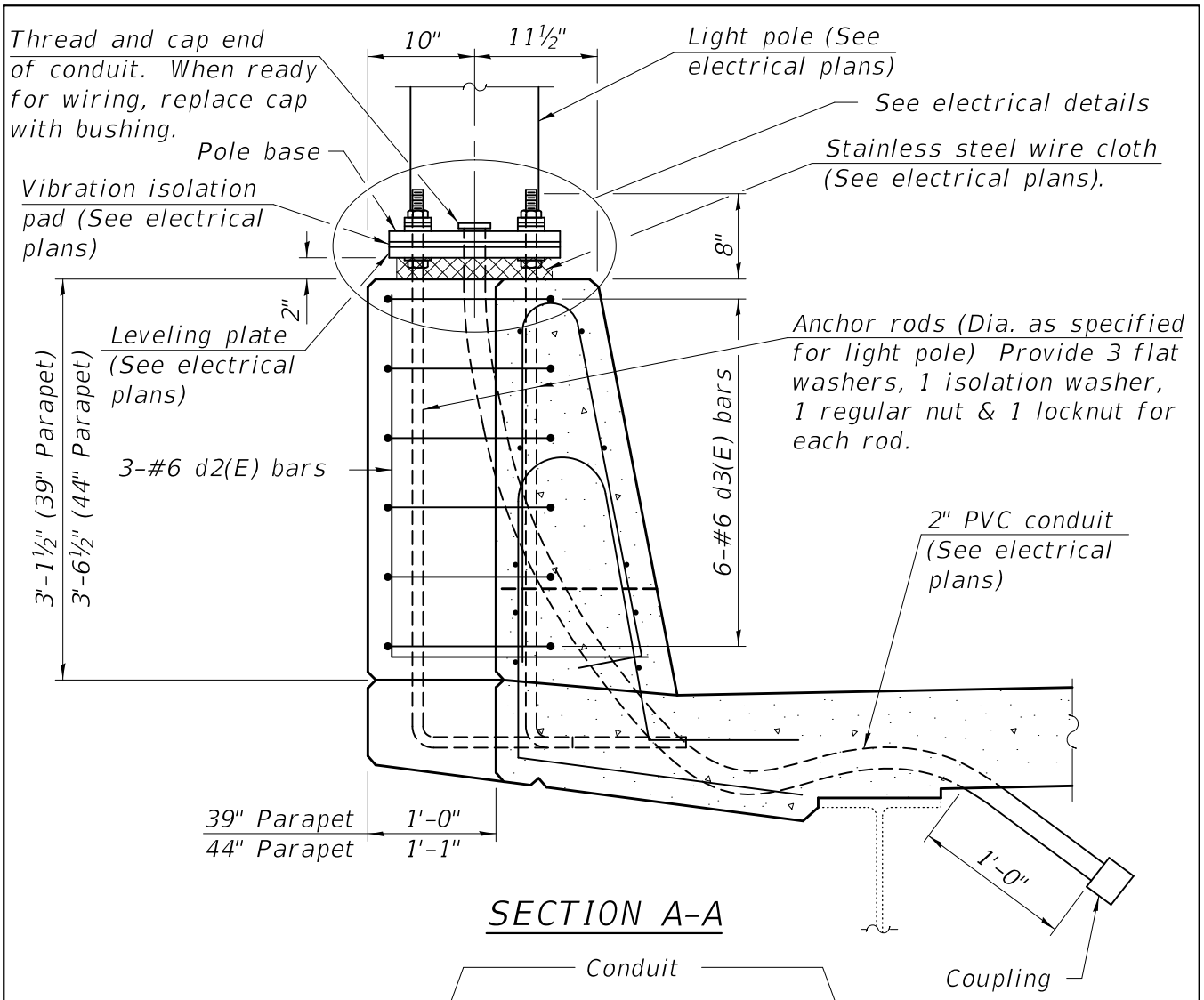

SECTION A-A

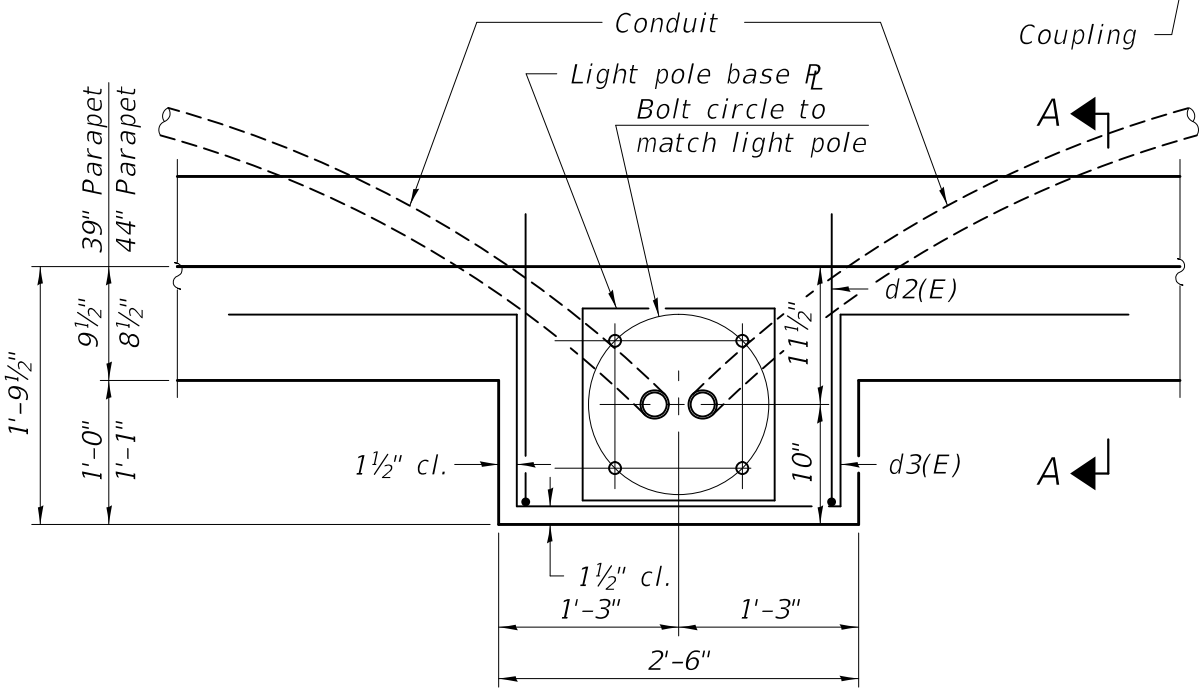

Note:
Cost of anchor rods is included with Concrete Superstructure.

PLAN

LIGHT POLE MOUNTED ON CONCRETE PARAPET

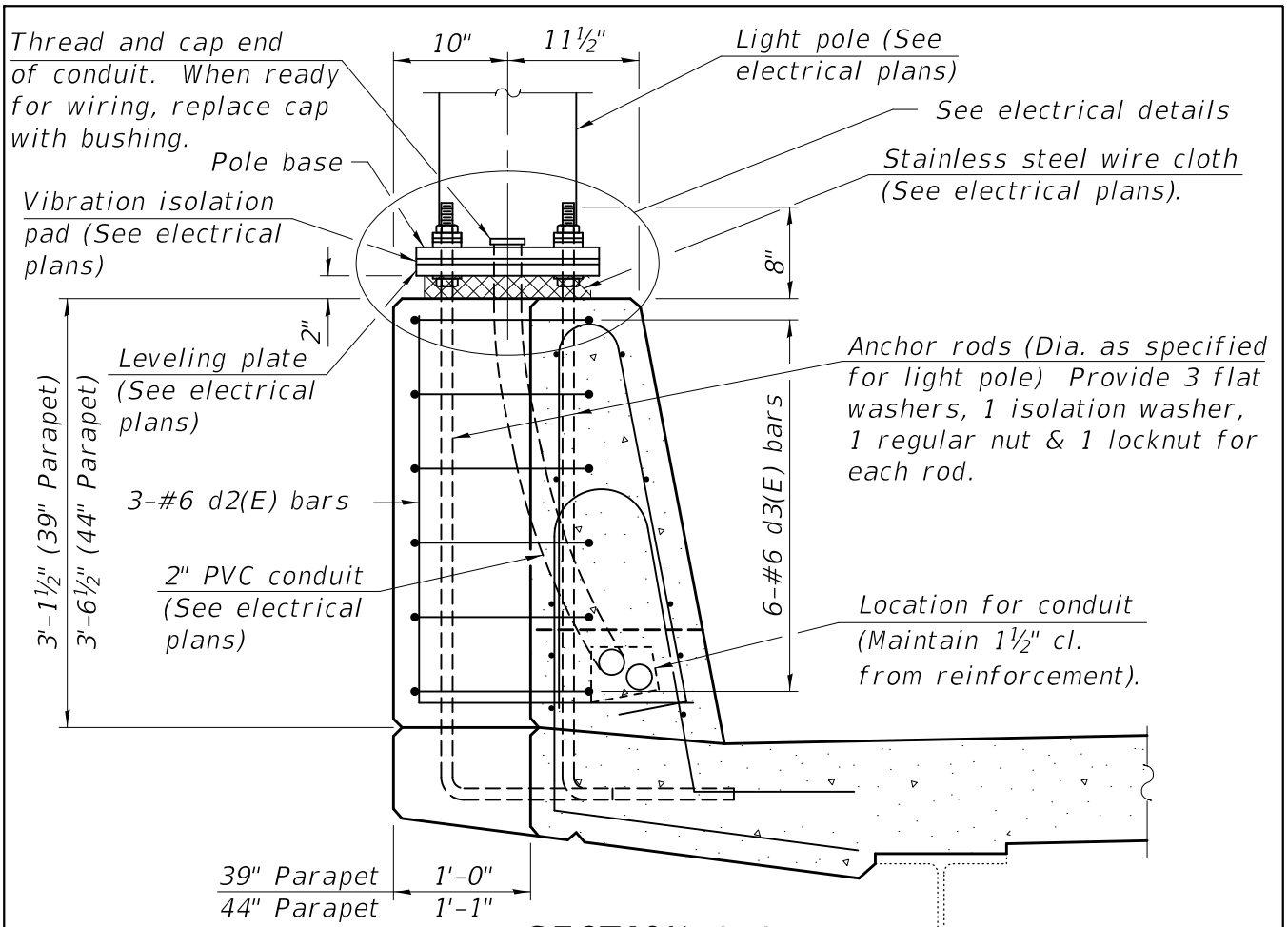

SECTION A-A

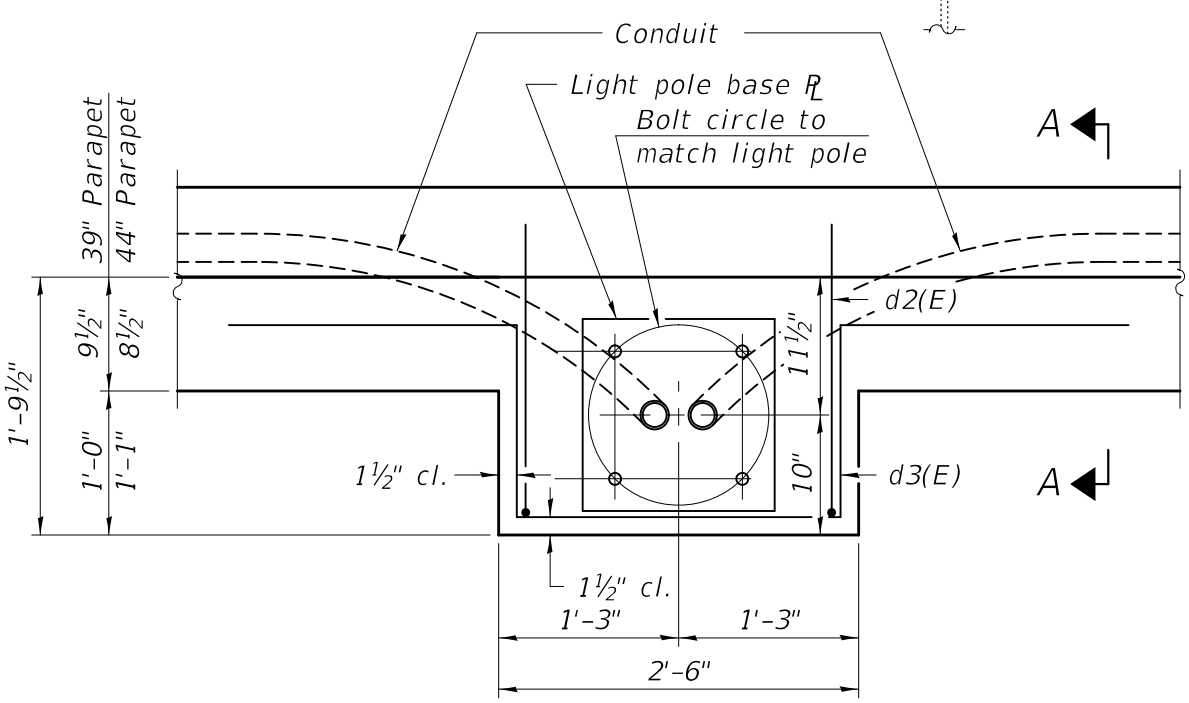

PLAN

Note:
Cost of anchor rods is included with Concrete Superstructure.

ALTERNATE
LIGHT POLE MOUNTED
ON CONCRETE PARAPET

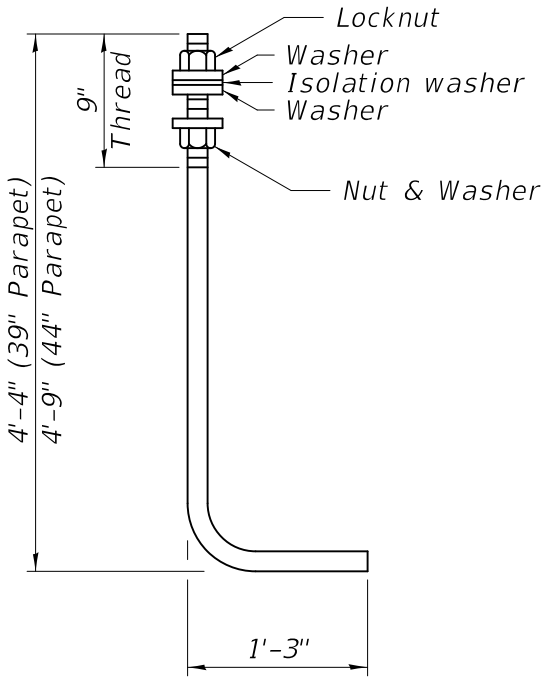

ANCHOR ROD

Diameter as specified for light poles.
(ASTM F 1554 Grade 105) Full length
hot dipped galvanized

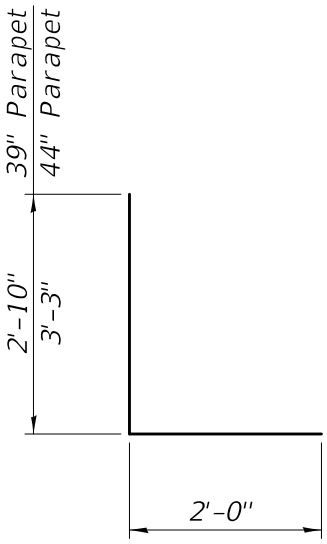

BAR d2(E)

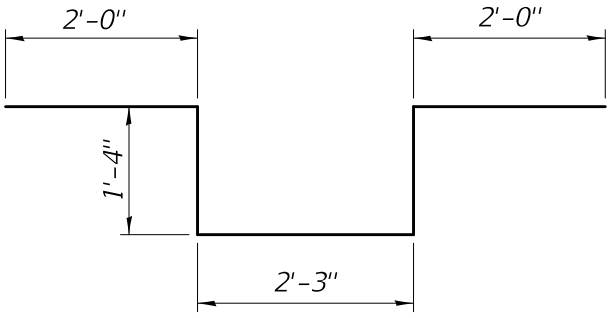

BAR d3(E)

LIGHT PEDESTAL
REINFORCEMENT

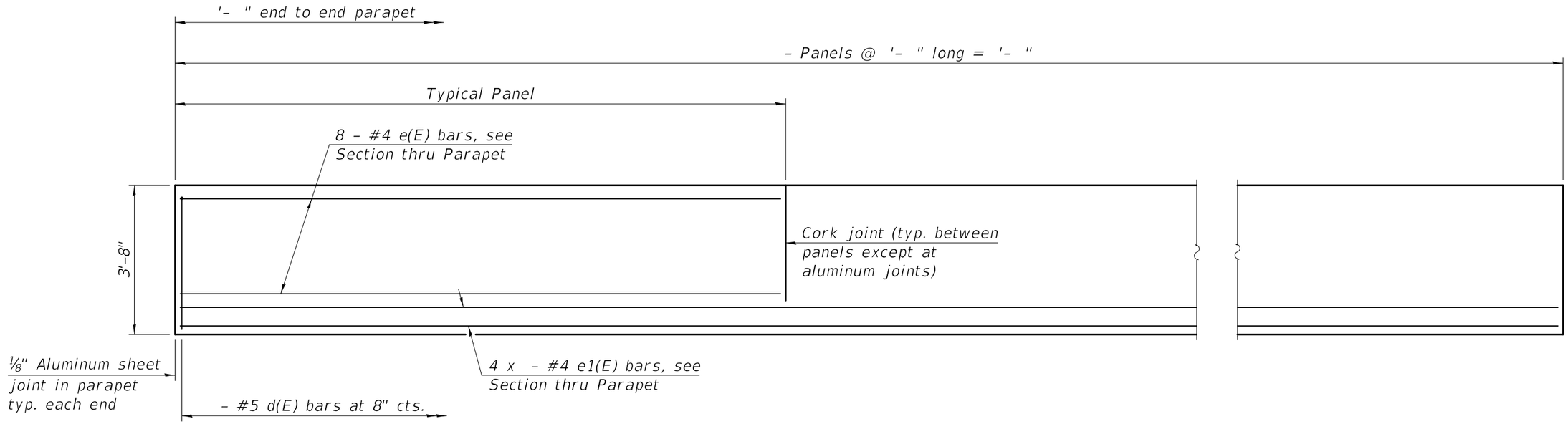

INSIDE ELEVATION OF 44" PARAPET

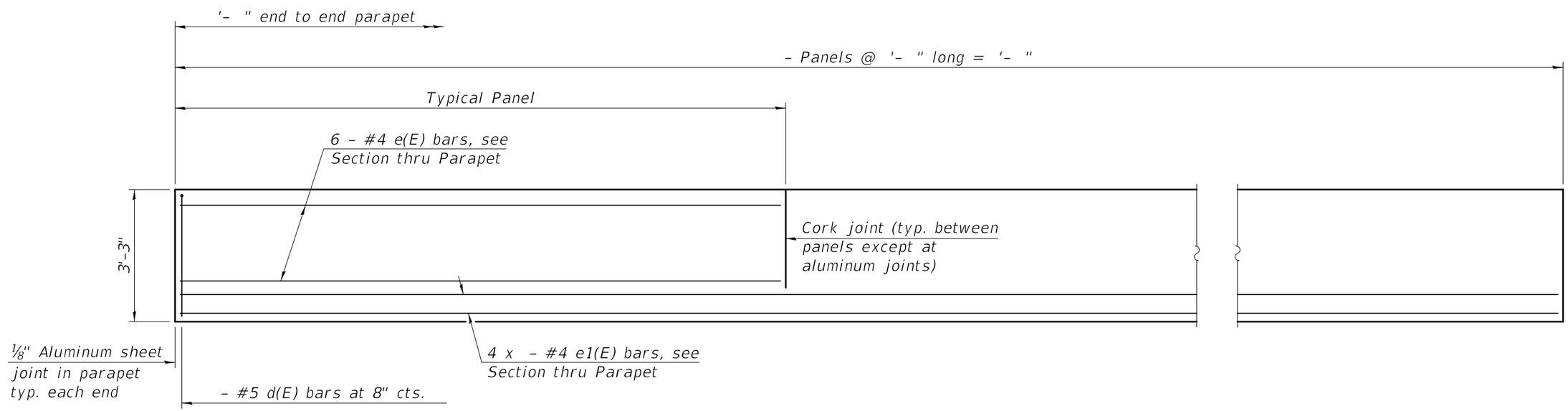

INSIDE ELEVATION OF 39" PARAPET

PARAPET ELEVATIONS

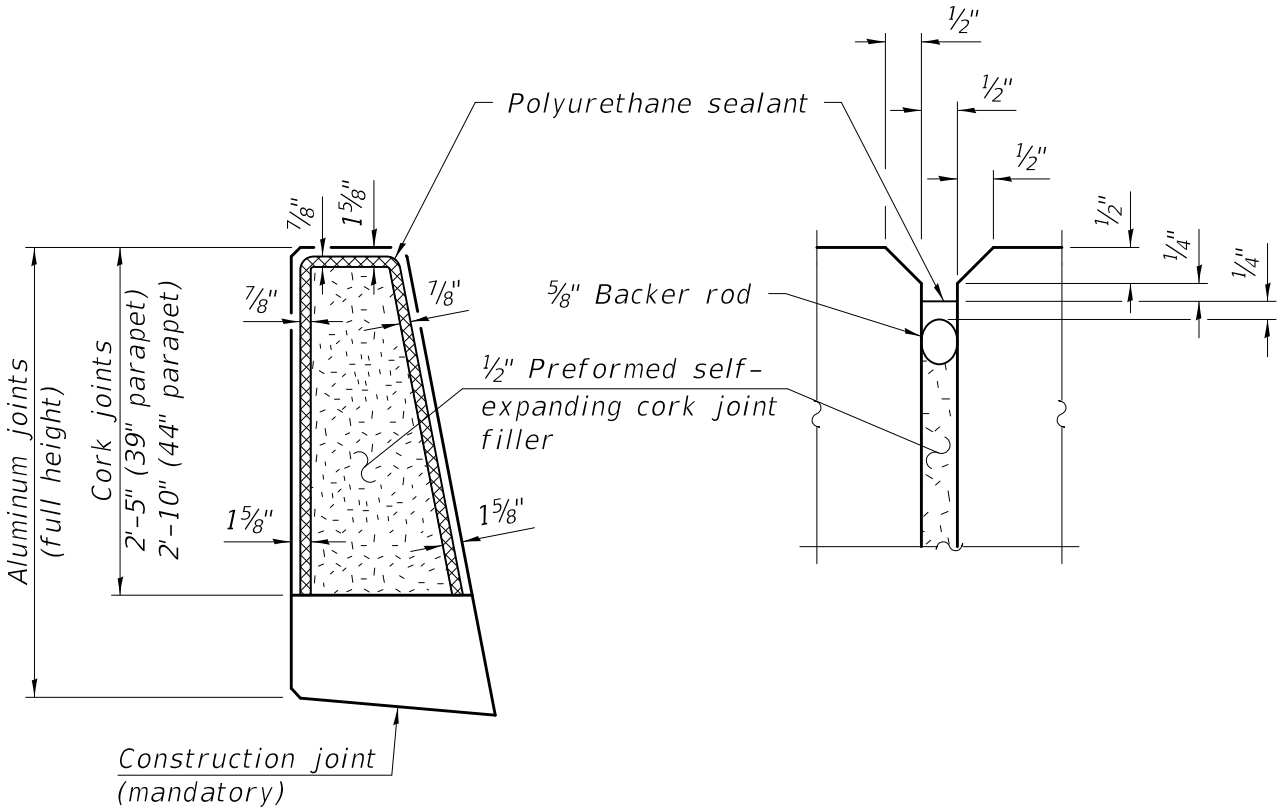

Note:
The polyurethane sealant shall be according to Article 1050.04 of the Standard Specifications and the color shall be gray.

PARAPET JOINT DETAILS

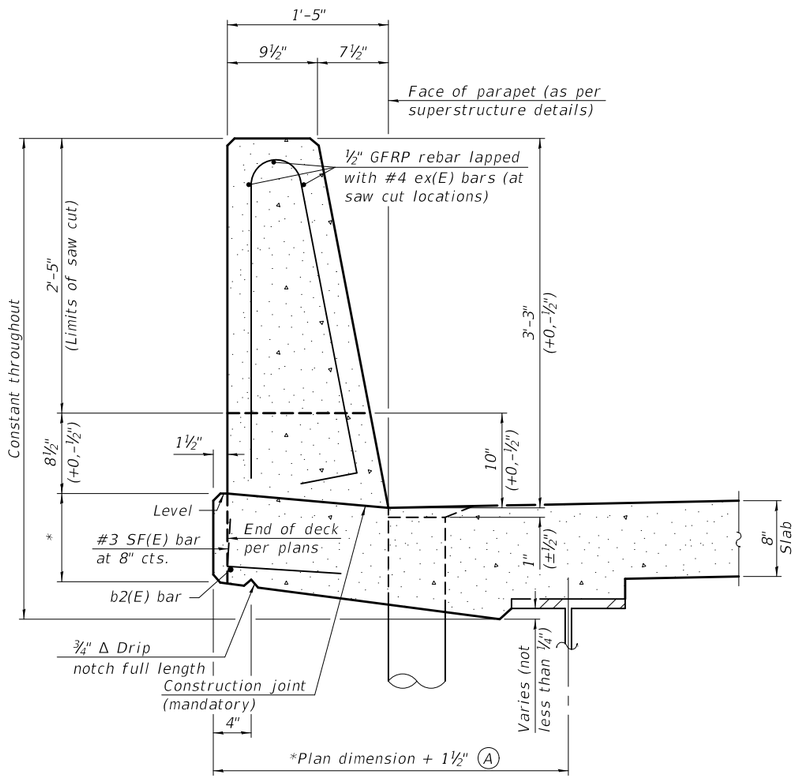

39" CONSTANT-SLOPE PARAPET SECTION

(Showing dimensions, d(E), and ½" Ø GFRP rebar)

*See Superstructure Details.

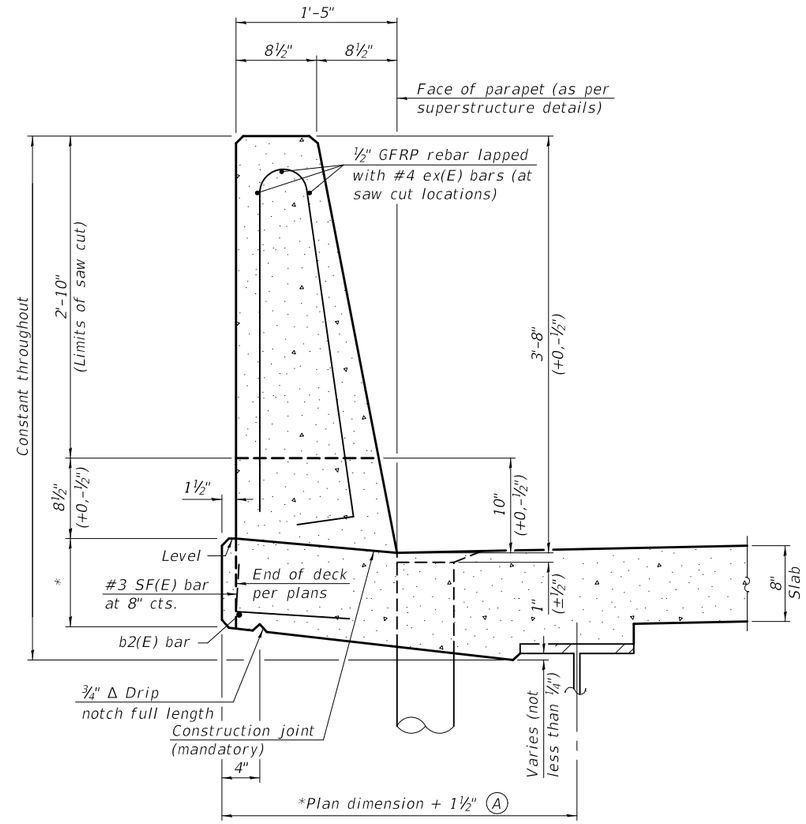

44" CONSTANT-SLOPE PARAPET SECTION

(Showing dimensions, d(E), and ½" Ø GFRP rebar)

GENERAL NOTES

All dimensions shall remain the same as shown on superstructure details, except dimension A which is to be revised as shown. Additional concrete needed to revise dimension A = 0.00348 cu. yds./ft. for 39" and 44" parapets.

Place full depth aluminum sheets as shown on superstructure details.

Replace all cork joint filler locations with a full thickness saw cut.

Steel superstructure shown. Other superstructure types similar.

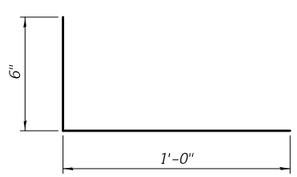

#3 (E) BAR

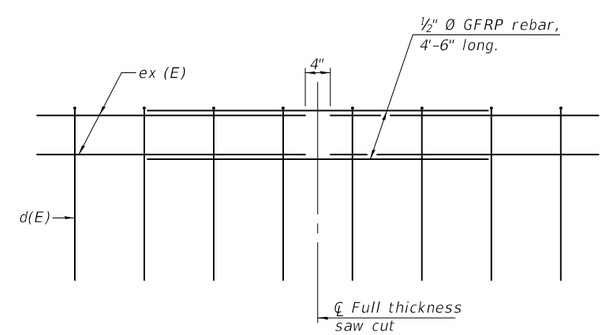

GFRP REBAR STIFFENING DETAIL

(Place as shown in parapet section at each parapet joint location.)

SFP 39-44 12-6-2018

USER NAME =	DESIGNED -	REVISED -	STATE OF ILLINOIS DEPARTMENT OF TRANSPORTATION
	CHECKED -	REVISED -	
PLOT SCALE =	DRAWN -	REVISED -	
PLOT DATE =	CHECKED -	REVISED -	

CONCRETE PARAPET SLIPFORMING OPTION
STRUCTURE NO.
SHEET OF SHEETS

F.A. RTE.	SECTION	COUNTY	TOTAL SHEETS	SHEET NO.

CONTRACT NO.
ILLINOIS FED. AID PROJECT

MODEL: SFP 39-44
FILE NAME: pw:\\IL084EBIDINTEG.illinois.gov:PWIDOT\Documents\IDOT Offices\Bureau of Bridges and Structures\Standards\Miscellaneous\Bridge Cell Libraries\Bridge\Base Sheets-General.cel
1/10/2019 9:00:37 AM

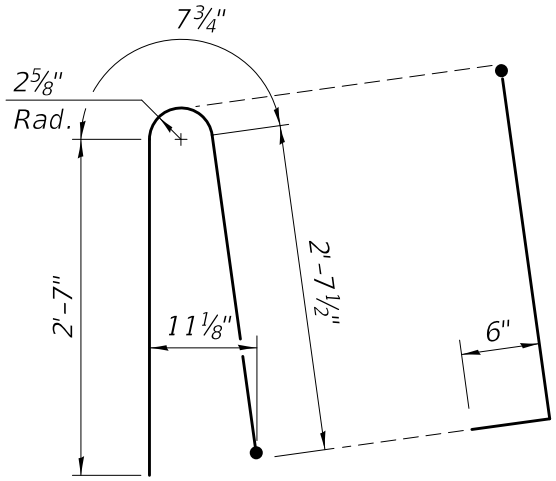

ALTERNATE BAR d(E)

(For 39" constant slope parapet when conduit is present)

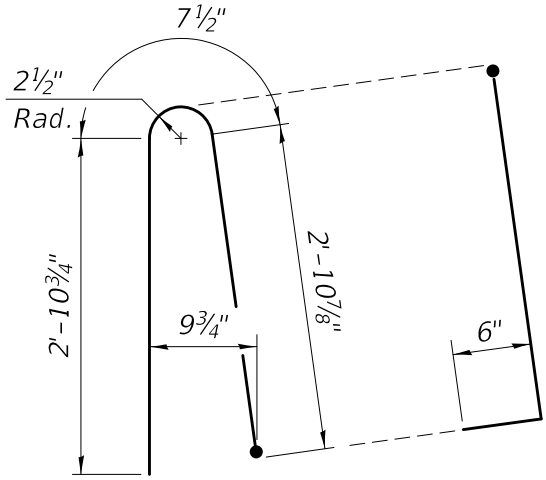

ALTERNATE BAR d(E)

(For 44" constant slope parapet when conduit is present)

ALTERNATE d(E) BAR
WHEN CONDUIT PRESENT