Illinois Department of Transportation

Memorandum

To:	ALL BRIDGE DESIGNERS	19.2
From:	D. Carl Puzey	
Subject:	Membrane Waterproofing System for Buried Structures	
Date:	March 5, 2019	

To adequately waterproof a buried structure, IDOT requires a self-adhering membrane sheet with film, a geocomposite drainage sheet (i.e. geocomposite wall drain), and ancillary materials to attach these components. Previous versions of the Membrane Waterproofing System for Buried Structures Guide Bridge Special Provision (GBSP 81) contained Physical Property tables for these components, which were not consistent with products known to be effective in the field. Moreover, the geocomposite wall drain was a hidden cost not obvious to designers and contractors.

In order to simplify testing requirements and make pay items more consistent with those used on bridges, the pay item Membrane Waterproofing System for Buried Structures is being split into two pay items: Membrane Waterproofing System for Buried Structures and Geocomposite Wall Drain. The Guide Bridge Special Provision has been updated to simplify the Physical Property table for the membrane sheet and remove the references to the geocomposite drainage sheet. The Geocomposite Wall Drain specifications are found in Section 591 of the Standard Specifications.

The attached figures show revised pay limits, with the Geocomposite Wall Drain and Membrane Waterproofing for Buried Structures shown as separate pay items.

The details specified in this memorandum shall be effective for projects beginning with the April 26, 2019 letting. The Bureau of Bridges and Structures will coordinate with design consultants and district offices to make necessary revisions.

Please direct questions to Mark Shaffer in the Policies, Standards, and Specifications Unit at (217) 785-2914.

Attachments

MDS/kktABD19.2-20190305

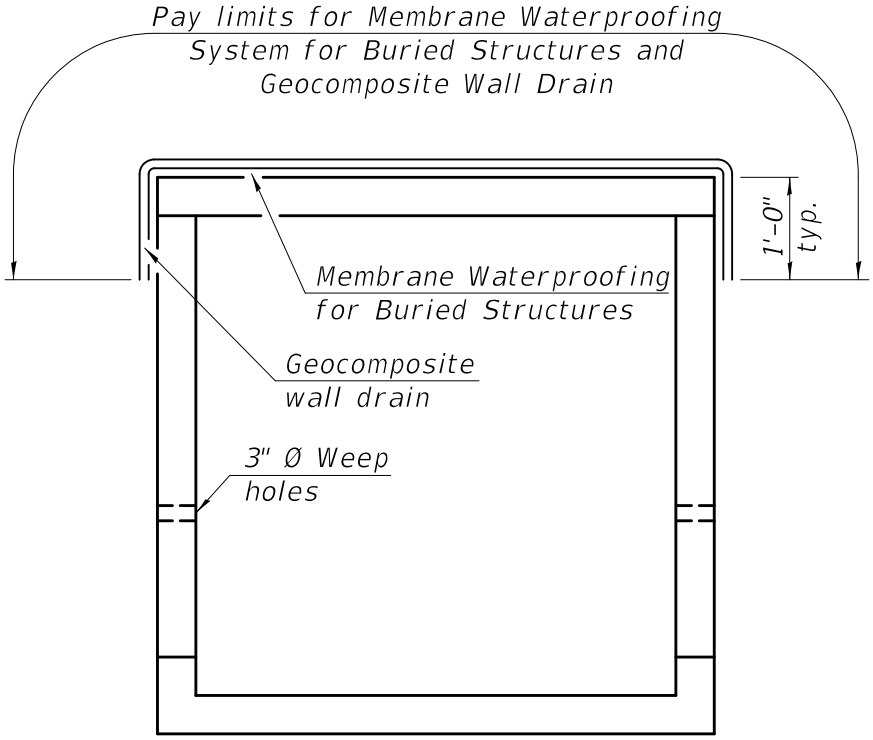

CAST-IN-PLACE CONCRETE BOX CULVERT

Fill Height ≤ 3 ft.

For Fill Heights > 3 ft., Omit Membrane Waterproofing for Buried Structures and Geocomposite Wall Drain.

Note:

Geocomposite Wall Drain shall be according to Section 591 of the Standard Specifications, except that concrete nails shall not be used in areas where it overlaps Membrane Waterproofing System for Buried Structures.

MEMBRANE WATERPROOFING SYSTEM FOR CAST-IN-PLACE CULVERTS

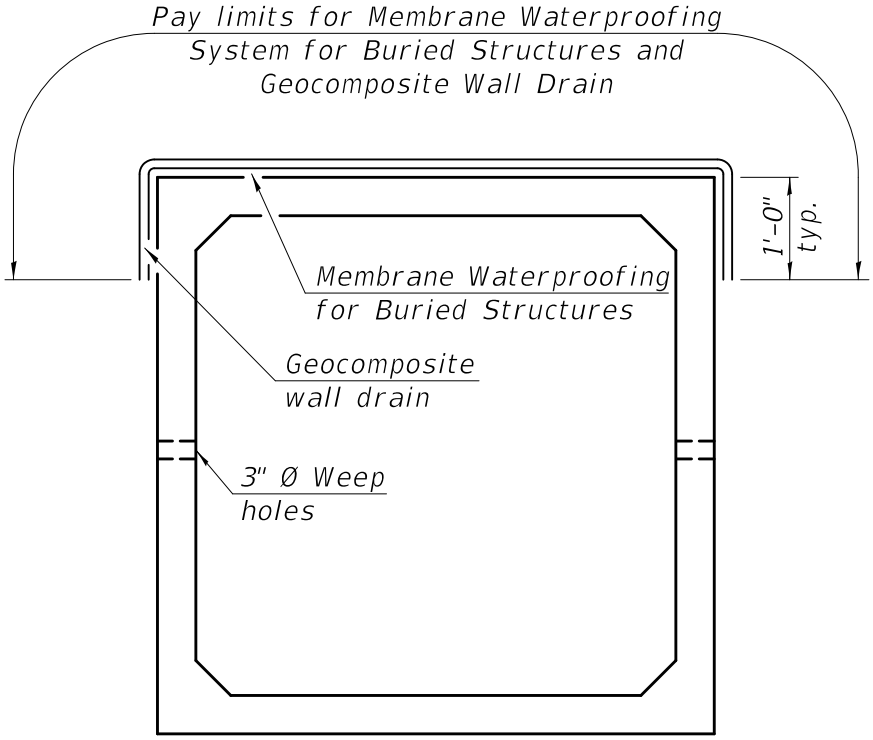

PRECAST CONCRETE BOX CULVERT

Fill Height ≤ 3 ft.

For fill heights > 3 ft., omit Membrane Waterproofing System for Buried Structures and Geocomposite Wall Drain.

Note:

Geocomposite Wall Drain shall be according to Section 591 of the Standard Specifications, except that concrete nails shall not be used in areas where it overlaps Membrane Waterproofing System for Buried Structures.

MEMBRANE WATERPROOFING SYSTEM FOR PRECAST CULVERTS

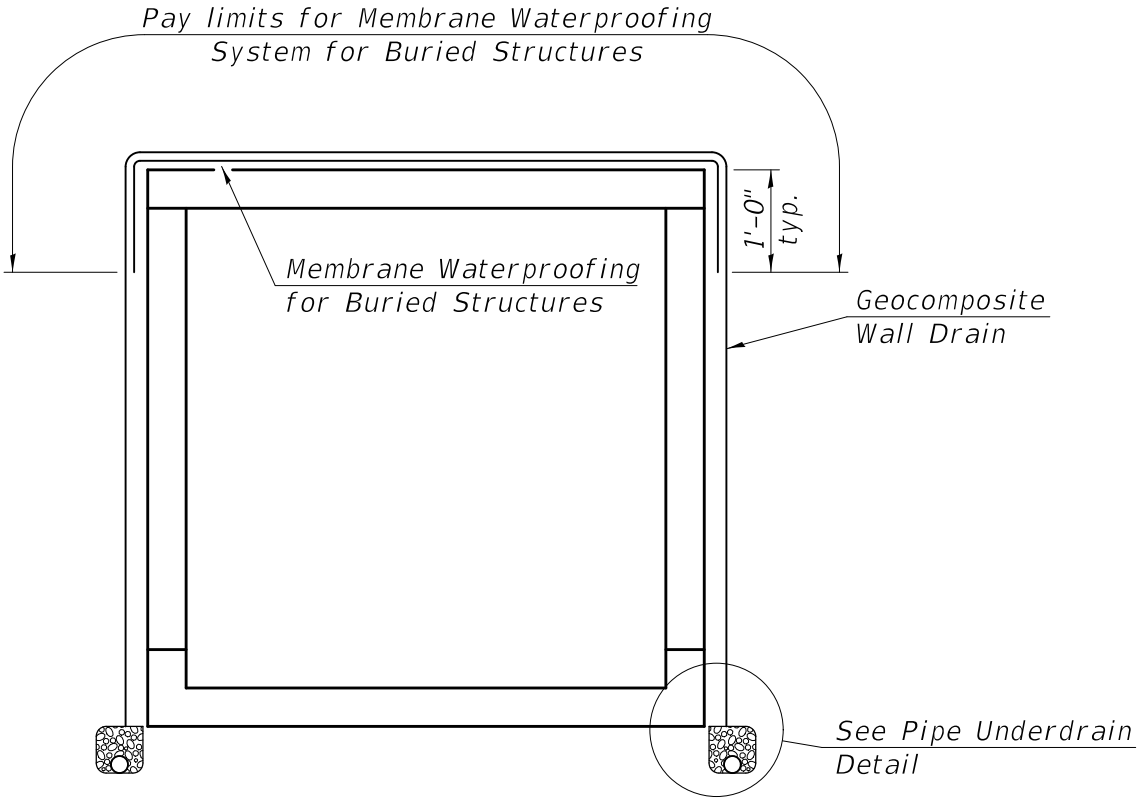

CAST-IN-PLACE CONCRETE BOX CULVERT

Pedestrian tunnel (All fill heights)

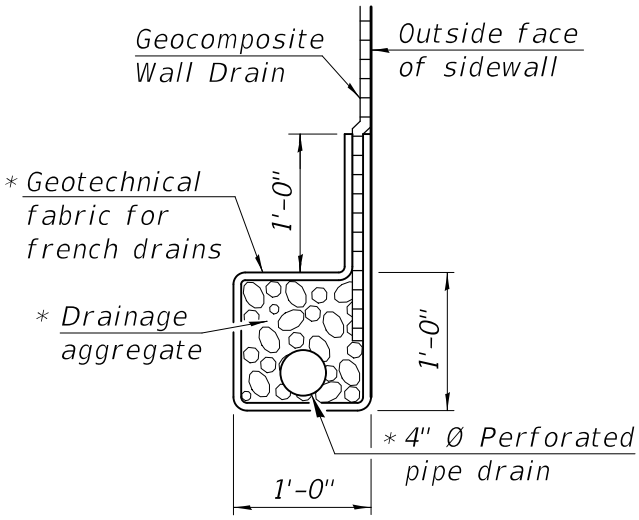

PIPE UNDERDRAIN DETAIL

Note:

The pay limits for Geocomposite Wall Drain are along the perimeter of the top and side walls.

Geocomposite Wall Drain shall be according to Section 591 of the Standard Specifications, except that concrete nails shall not be used in areas where it overlaps Membrane Waterproofing System for Buried Structures.

* Cost included with Pipe Underdrains for Structures 4". All drainage components shall extend to 2'-0" from the end of each wingwall, except an outlet pipe shall extend until interesecting with side slopes. The pipes shall drain into concrete headwalls. See Highway Standard 601101.

MEMBRANE WATERPROOFING SYSTEM FOR CAST-IN-PLACE CULVERTS

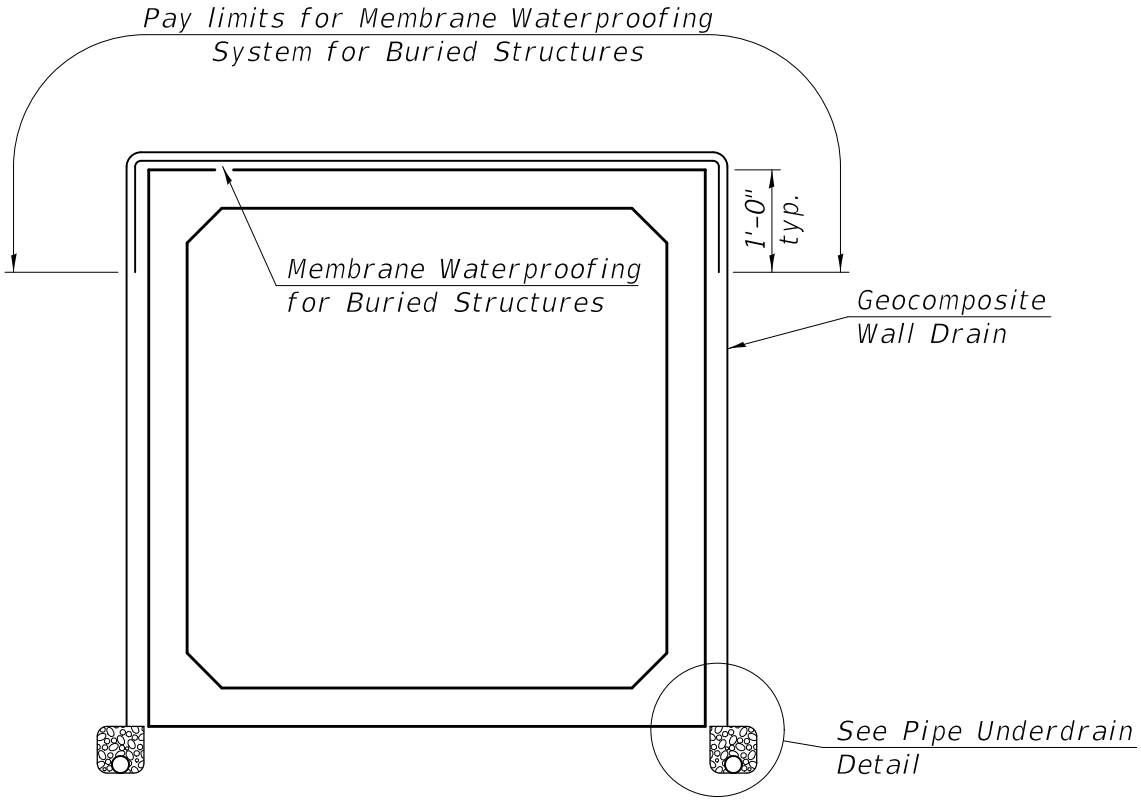

PRECAST CONCRETE BOX CULVERT

Pedestrian tunnel (All fill heights)

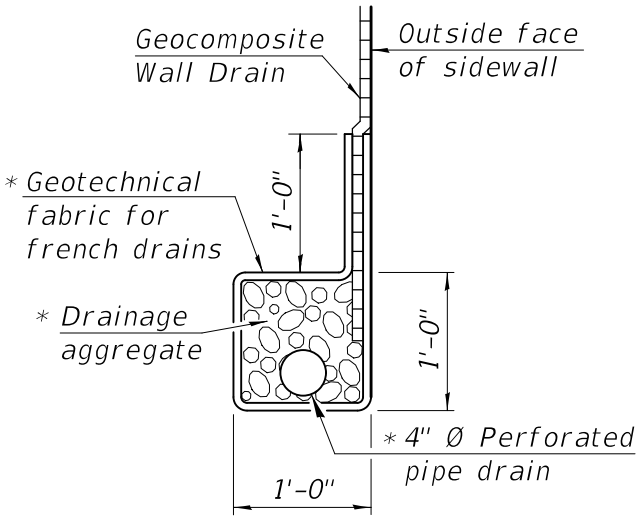

PIPE UNDERDRAIN DETAIL

Note:

The pay limits for Geocomposite Wall Drain are along the perimeter of the top and side walls.

Geocomposite Wall Drain shall be according to Section 591 of the Standard Specifications, except that concrete nails shall not be used in areas where it overlaps Membrane Waterproofing System for Buried Structures.

* Cost included with Pipe Underdrains for Structures 4". All drainage components shall extend to 2'-0" from the end of each wingwall, except an outlet pipe shall extend until interesecting with side slopes. The pipes shall drain into concrete headwalls. See Highway Standard 601101.

MEMBRANE WATERPROOFING SYSTEM FOR PRECAST CULVERTS