ABD Memo's
Table of Contents
June 15, 2013

Memorandum No.	Date Issued	Status
13.X 2013 LRFD Interims	Jun. 10, 2013	New
12.5	Dec. 10, 2012	Active
12.4	Aug. 17, 2012	Active
12.3	Jul. 25, 2012	Active
12.2	Apr. 16, 2012	Active
12.1	Apr. 16, 2012	Active
12.0	Apr. 02, 2012	Active
11.4	Nov. 30, 2011	Incorporated
11.3 (rev)	Nov. 02, 2011	Active
11.2	Aug. 08, 2011	Incorporated
11.1	Mar. 03, 2011	Incorporated
AASHTO LRFD Spec.	Feb. 16, 2011	Archived
10.4	Nov. 01, 2010	Incorporated
10.3	Jun. 15, 2010	Incorporated
AASHTO LRFD Spec.	May 14, 2010	Archived
10.2	May 11, 2010	Active
10.1	Apr. 27, 2010	Active
AASHTO B.E. Manual	Apr. 03, 2009	Active
09.1	Mar. 06, 2009	Active
08.4	Nov. 07, 2008	Active
08.1	Feb. 20, 2008	Incorporated
Archive Announcement	Mar. 19, 2007	Active
06.1	Mar. 16, 2006	Active
05.4	Sept. 30, 2005	Incorporated

Illinois Department of Transportation
Memorandum

To:	ALL BRIDGE DESIGNERS
From:	D. Carl Puzey
Subject:	AASHTO LRFD Specifications
Date:	June 10, 2013

The American Association of State Highway and Transportation Officials (AASHTO) have published the following publication:

2013 Interim Revisions to AASHTO LRFD Bridge Design Specifications, Customary U.S. Units, 6th Edition

Print Item Code: 30-LRFDUS-6-11
Online Download Item Code: LRFDUS-6-11-UL

You can order this and all AASHTO publications by calling 1-800-231-3475 or by visiting the online bookstore at https://bookstore.transportation.org.

This publication shall be applicable to all LRFD design plans prepared from TS&L plans approved after July 1, 2013.

Certain interims are under investigation and additional policies will be forthcoming.

Please direct questions regarding interpretation of interims to DOT.BBS.COMSUGGEST@illinois.gov.

KLR/GMK/kktABD13.0AASHTO LRFDspecifications-20130606

Illinois Department of Transportation
Memorandum

To:	ALL BRIDGE DESIGNERS	12.5
From:	D. Carl Puzey	D. Carl Puzey
Subject:	Revised Riprap Treatment Standards & Guidelines	
Date:	December 10, 2012	

This memorandum revises standard riprap treatments shown in the Bridge Manual to better reflect direction from the FHWA Hydraulic Engineering Circular, *HEC-23, Bridge Scour and Stream Instability Countermeasures Experience, Selection and Design Guidance, 3rd Edition-Vol. 1* and Chapter 11 of the *IDOT Drainage Manual*. The riprap applications affected by these revisions include standalone riprap installations around bridge piers, streambed or channel bank revetment, and rock utilized for slopewalls that protect bridge abutments and embankment cones. These revisions should enhance the performance of the installations and improve constructability by limiting the filter fabric coverage.

Included is new Figure 2.3.6.3.3-1a. This detail shall be shown on the plans when a standalone riprap treatment is used at a pier. Research has shown that extending the filter fabric to the edge of the riprap is undesirable. Per HEC-23, the filter fabric should terminate 2/3 of the distance from the pier face to the edge of riprap. Per IDOT Drainage Manual Chapter 11 Scour Countermeasures, riprap shall extend 10 feet from the pier face for most routine piers. It follows that in this case, the filter fabric would extend 7 feet from the pier face. This new detail will improve the scour resistance of the riprap installation.

Also included are revised details that shall be used in lieu of the details shown in the Bridge Manual. Figure 2.3.6.3.3-2 on page 2-100 of the Bridge Manual has been revised to eliminate the wrap of filter fabric within the toe. The filter fabric now only extends to the lowest point in the toe. This revision allows the toe to fail when undermined and provide a level of self protection that can easily be repaired. Figure 2.3.6.3.3-3 on page 2-101 of the Bridge Manual has also been revised for the same reason.

The new details have been placed in the Planning Library on the Department's web site for inclusion on applicable TS&L's; however, the sample TS&L's of Bridge Manual 2.3.14 have not been updated. These are scheduled to be updated in the near future.

This policy shall be implemented for all applicable projects beginning with the March 8, 2013 letting. Please direct questions or comments to Matt O'Connor at 217-785-2917 Matthew.OConnor@illinois.gov

Attachments

DLG/kktABD12.5revisedripraptreatment-20121210

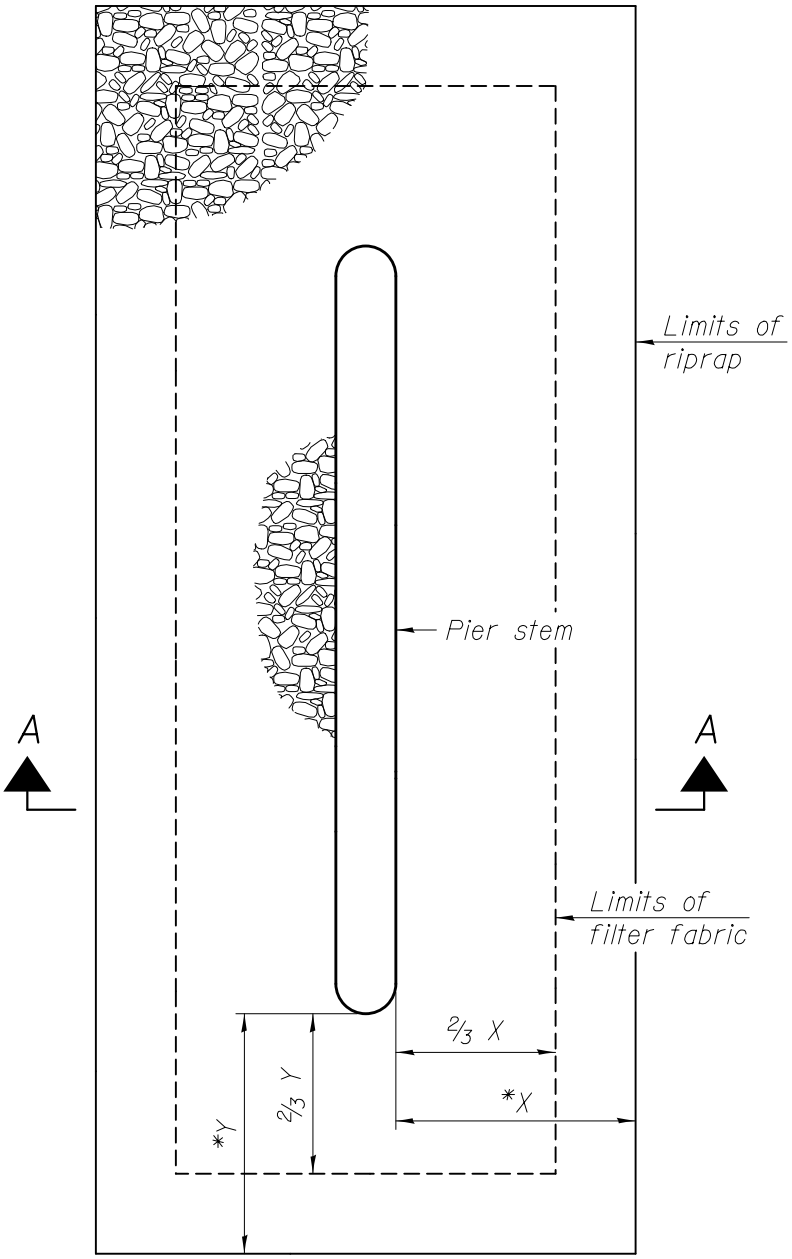

PLAN

* See Chapter 11 of Drainage Manual for procedure to calculate this dimension.

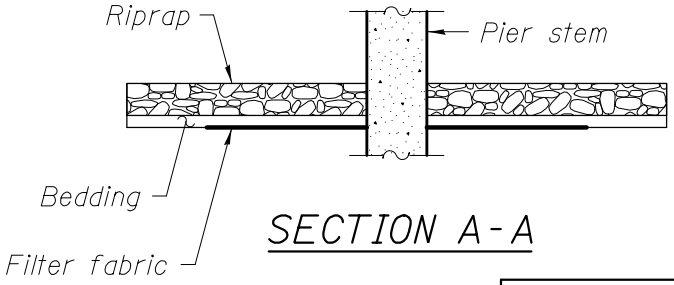

SECTION A-A

STANDALONE RIPRAP PROTECTION OF PIERS

Figure 2.3.6.3.3-1a

Riprap Class	t_R	t_B	A	B
A4	16''	6''	4'	8'
A5	22''*	8''	5'	10'
A6	26''*	10''	6'	12'
A7	30''*	12''	7'	14'

* Check abutment depth and increase as necessary to match depth of riprap and bedding

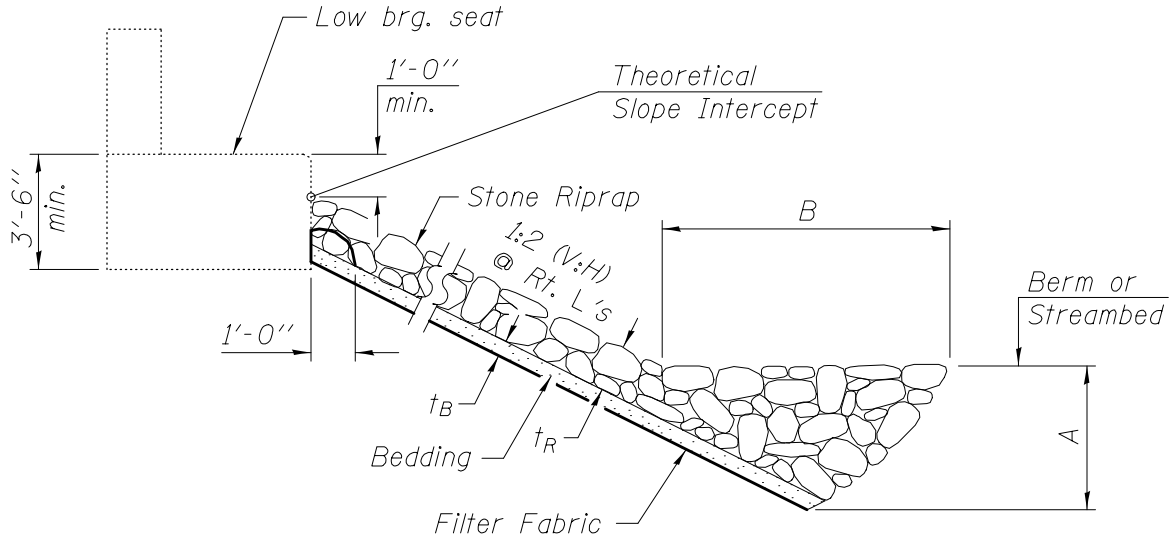

TOE STONE RIPRAP TREATMENT
STREAM CROSSINGS

Figure 2.3.6.3.3-2

Riprap Class	t_R	t_B	A	B
A4	16''	6''	2'-8''	4'-0''
A5	22''	8''	3'-8''	5'-6''
A6	26''	10''	4'-4''	6'-6''
A7	30''	12''	5'-0''	7'-6''

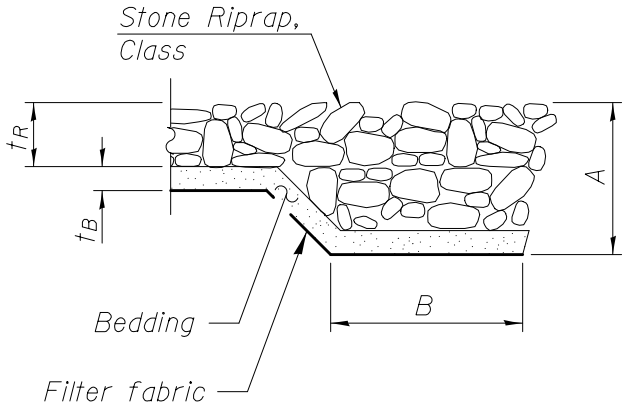

FLANK STONE RIPRAP TREATMENT FOR STREAM CROSSINGS

Figure 2.3.6.3.3-3

Illinois Department of Transportation

Memorandum

To:	ALL BRIDGE DESIGNERS	12.4
From:	D. Carl Puzey	
Subject:	Slipforming of Parapets Option	
Date:	August 17, 2012	

This memorandum supersedes ABD 07.1 and provides guidance on the use of slipformed parapets. Previous restrictions on slipforming 42 inch tall parapets, as well as when conduits are required in parapets, have been removed due to the successful completion of several test projects. The Guide Bridge Special Provision for Slipform Parapets (GBSP 61) has been revised accordingly, and a new base sheet SFP34-42, which covers details for both 34 and 42 inch tall slipformed F shape parapets has been developed.

The revision to GBSP 61 includes specific language to address requirements for a test section for 42 inch tall F Shape parapets. This language requires the contractor to slip a stand-alone trial section for all 42 inch F shape parapets to allow for the Department to evaluate the contractor's machine settings, travel speed and mix design. In addition, the restriction on slipforming parapets with conduits has been removed and an alternate parapet reinforcement detail has been added for use when embedded conduits are specified.

Project Screening and Selection

The following initial screening criteria should be used to exclude projects where slipforming is either inappropriate or where the Department's investigation is ongoing.

Exclude:

1. Parapets taller than 42 inches.
2. Back-to-back parapets similar to Bridge Manual Figure 3.2.7-2.
3. Parapets with less than 2 feet of horizontal clearance to an obstruction such as an adjacent bridge or other structure.
4. Projects where aesthetic patterns requiring the use of form liners is specified.
5. Projects in regions where there are known problems with either concrete consistency or timely delivery.

Consideration:

1. Parapets mounted on top of retaining walls or on top of anchorage slabs are acceptable but provisions in the contract documents for an extended portion of the wall or slab shall be provided such that the supporting element extends 1.5 inches beyond the back face of the parapet. Details similar to the SFP base sheet are required.

2. Curved bridges with radius less than 1500 feet may not be suitable candidates for slipforming. While parapets with a smaller radius have been slipped, this is dependent on the length of the contractor's mold and its ability to move along the curve while still maintaining proper concrete cover over the rebar. It is also dependent on the accuracy of rebar placement. Slipforming of parapets with a radius of less than 1500 feet is not recommended.

Projects passing the initial screening requirements shall also require approval from the District/Owner before allowing the slipforming option.

Implementation

Projects approved for the slipforming option, shall include base sheet (SFP34-42) and Special Provision (GBSP61) in the contract documents.

For projects where the District does not want to allow slipforming or that do not pass the screening, a note stating, "Slipforming of the parapets is not allowed." shall be placed with the other general notes in the plans. This note may be modified to accommodate those projects where the parapet on one side of the bridge passes the screening while the other side does not. The typical example of this is a dual structure where the median barrier from Bridge Manual Figure 3.2.7-2 is used. If the barrier adjacent to the water table passes the screening and the District desires to allow slipforming, the designer shall add a descriptive plan note such as "Slipforming of the median parapet is not allowed".

The Standard Specifications for Highway and Bridge Construction 2012 does not reference slipforming of bridge parapets. It is, therefore, important to indicate in the contract documents whether or not slipforming of the parapets will be allowed. GBSP 61 and base sheet SFP34-42 will be available on the IDOT website in the near future. Designers shall implement this change on applicable projects not yet let.

GMK/DLG/kktABD12.4slipformingofparapets-20120817

Illinois Department of Transportation
Memorandum

To:	ALL BRIDGE DESIGNERS	12.3
From:	D. Carl Puzey	D. Carl Puzey
Subject:	2012 Integral Abutment Bridge Policies and Details	
Date:	July 25, 2012	

Integral abutment bridges eliminate the need for joints in bridge decks and thereby provide better protection from water and salt damage to the superstructure. These structures have proven to decrease maintenance costs and increase service life. The Department has always strived to increase the number of structures eligible for integral design through research, engineering judgment and experience but recognized that more comprehensive research was necessary to expand the applications of our integral structures. Accordingly, the Department has invested in a series of extensive research efforts and has completed the first two phases. This memorandum highlights the new integral policies and details with the implementation plan.

Summary of Changes

The following summary highlights the significant changes in the Department's policies and details and corresponds to the new figures in this memorandum and the new base sheets on the IDOT website.

1. An Integral Abutment Pile Selection Chart was developed. It is a function of the effective expansion length and skew of the structure. Structure lengths up to 550 feet and skews up to 45 degrees are permitted for integral structures. The specifics of this chart and directions on how to apply it follow later in this memorandum.

2. The pile orientation at the abutments shall be weak axis bending where the pile web is always perpendicular to the centerline of the structure. The pile orientation at the pier will remain unchanged with the web of the pile perpendicular to the face of the pier. See Figures 8 and 9.

3. The corbel has been eliminated and absorbed into the abutment cap. The approach seat has been increased to 12 inches. See Figures 2 through 7.

4. Beam flange clipping details have been provided to eliminate interference with the approach slab for high skews and steep grades. See Figures 11 through 13.

5. Pile encasement around HP piles at integral abutments has been eliminated; however, the reinforcement in the top portions of metal shell piles at abutments (Base Sheet F-MS) shall remain.

6. A 2'-0" diameter # 4 spiral reinforcement is required around abutment piles for HP 12X74 piles and larger.

7. Standard integral abutment cap widths for various superstructures are:

   a. Slabs: 3'-0"
   b. Steel beams: 3'-4"
   c. Concrete beams: 3'-8" (May need to be increased due to profile grade and camber)

8. The backfill shall be Granular Backfill according to GBSP #76 (Granular Backfill for Structures) available at the following link: http://www.dot.il.gov/bridges/GBSP76.pdf.
   The backfill is not required to be compacted; however, the backfill is recommended to be compacted for structures with steel railings extending beyond the bridge. This provides for secure railing posts and was accounted for in the design assumptions.

9. Steel and concrete superstructures shall connect the diaphragm to the cap with an equivalent area of steel of # 8 bars at 12" centers in the front and back face for the full length of the cap. The diaphragm shall also be reinforced with a minimum shear stirrup reinforcement of # 5 bars at 12" centers.

10. Slab bridges shall be connected to the abutment cap with # 5 bars at 12" in the front and back face for the full length of the cap and their approach slab shall be connected with # 5 bars at 12" centers. See Figures 6 and 7.

11. The bar splicer connecting the superstructure to the approach slab has been eliminated.

12. A formed joint with bridge relief joint sealer is provided full width at the end of the bridge deck to provide a controlled crack due to possible differential rotation.

13. The beam anchorages into the diaphragm have been set further back from the face of the diaphragm. See Figures 14 and 15.

14. The centerline of bearing from the end of beam is 5 inches for steel beams and 6 inches for PPC I-Beams and Bulb T-Beams. The bearing for steel beams is a 2 inch rocker plate and the bearing for concrete beams is a 1 inch thick fabric bearing pad with cellular polystyrene filling the remaining area under the beam in the diaphragm. See Figures 10 and 18.

15. Integral slab bridges are limited to a total structure length of 130 feet and a maximum individual span of 40 feet. Consequently piles larger than HP 10X57 are not expected and therefore spiral reinforcement around piles will not be used on slab bridges. Likewise precast approach slabs should not be used for integral slab bridges since they are ≤ 130 feet in length.

16. Wingwalls shall be parallel to the centerline of the abutment. The wingwall length shall continue to be determined as illustrated in Section 3.8.3 of the Bridge Manual. The maximum length of wingwall connected to the structure shall remain at 10 feet. The minimum length of wingwall extension shall be 4 feet.

17. Abutments shall be parallel. Flared structures are permitted. Integral structures with curved girders are not permitted.

18. Integral structures are not permitted with MSE abutment walls. When MSE abutment walls are required, semi-integral abutments or standard stub abutments should be considered.

19. Similar Integral abutment detail changes have been applied to semi-integral abutments. See Figures 20 through 23.

20. Precast Bridge Approach Slabs have been added for certain applications. Refer to the new base sheets available on the Department's web site.

    The bridge deck is required to be cast prior to backfilling behind the abutment and casting the approach slab. This procedure is primarily for constructability issues and to avoid placing an initial rotation on the abutment. However, the bridge typically contracts in the evening as the temperature falls and pulls on the freshly poured approach slab. This can cause transverse cracks in the new approach slab. Over the last several years we have experimented with precast approach slabs on longer structures which exhibit more of this contracting movement and they appear to have mitigated this problem.

    The upper expansion limit of a 4" PJS expansion joint is 130 feet and the Department has elected to use this limit to determine when to use the current cast-in-place (CIP) approach slab details and when to use the new precast approach slab details. The Integral Abutment Pile Selection Chart discussion in this memorandum describes how the centroid of stiffness of a structure is determined. If the longest distance from the centroid of stiffness to the back of the abutment is > 130 feet then the structure shall utilize the precast bridge approach slab on both ends of the bridge, regardless if the distance on the other end of the bridge is ≤ 130 feet. The designer should not use the effective expansion length (EEL) for determining whether a precast bridge approach slab is necessary. The Qu correction factor used to obtain the EEL is only necessary for the Integral Abutment Pile Selection Chart. The precast bridge approach slabs will have a 5 inch concrete wearing surface on top and shall utilize a shallow strip seal expansion joint suitable for concrete wearing surfaces. If the distance from the centroid of stiffness to the back of abutment is ≤ 130 feet at both abutments, then the current full depth CIP bridge approach slab with the PJS expansion joint at the end shall be used. In either application a rigid pavement connector is necessary just beyond the approach slab for proper installation of the expansion joints.

The precast approach slabs may vary in width from 3'-0" to 6'-0" as necessary to satisfy the location of the stage construction line and edge of pavement. The Department recommends utilizing wider precast units when possible to minimize the number of joints. The reinforcement details on the base sheets are adequate for all widths in this range. The precast bridge approach slab beams shall be separated by a 2 inch Styrofoam block full length along the bottom of the beam. This enables the shear keys to be cast with the concrete wearing surface.

Application and Examples for the Integral Abutment Pile Selection Chart

The Bridge Planner shall use the Integral Abutment Pile Selection Chart to determine whether a structure may be integral. The chart requires two pieces of structure data, the EEL and the skew. The EEL is calculated the same for steel and concrete superstructures.

The Department's preference for the superstructure to the substructure pier connection on integral abutment structures is fixed bearings for flexible pier types such as pile bents, encased pile bent piers and the P-DS and P-DSSW drilled shaft piers; and expansion bearings for stiffer piers such as wall and rigid frame piers. IDOT recognizes that the superstructure to pier connection, span ratios, and the pier stiffness can all affect the behavior of an integral structure. However, IDOT also has ongoing research indicating that there is a degree of flexibility that exists in their pier designs which is difficult to estimate. Therefore, until further research is completed, IDOT has elected to consider only the stiffnesses of the abutments on integral structures when determining the EEL at an abutment.

The EEL is a function of the controlling expansion length and subsequently the centroid of stiffness of the abutments. To determine the stiffness of each abutment, the soil borings within the critical pile depth shall be evaluated. The critical pile depth is taken to be the first ten feet of soil directly beneath the abutment. The average Qu within the critical pile depth at each abutment shall be determined. If the abutment is planned to be constructed on a new embankment the Qu shall be assumed to be 1.5 tsf. If a granular soil layer exists within the critical pile depth, it shall be converted to a cohesive soil using the following formula:

$$\mathrm{Qu} = 0.75\ln(\mathrm{N}) + 0.7$$

where:

N = SPT blow count

If the average Qu at each abutment is ≤ 1.5 tsf and each abutment has the same number of piles, then the centroid of stiffness of the structure may be assumed to be at the center of the structure and the controlling expansion length may be assumed to be half the total structure length measured back to back of abutment along the longitudinal axis of the superstructure. In these cases there are no

additional corrections to be applied to the controlling expansion length and therefore it may be assumed to be the EEL and entered into the Pile Selection Chart. Where the average Qu within the critical pile depth exceeds 1.5 tsf, a pile stiffness modifier (M), shall be used in determining the centroid of stiffness of the structure. The pile stiffness modifier accounts for the differences in soil stiffness and shall be calculated using the following formula:

$$\mathrm{M} = \frac{1}{1.45 - 0.3\mathrm{Qu}}$$

There is also a difference in pile stiffness for each pile type in the Integral Abutment Pile Selection Chart; however, the Department requires that the same pile type and size be used at both abutments of an integral structure and therefore no additional adjustment is necessary for the pile type. The centroid of stiffness is determined as a function of the relative difference in stiffness between the two abutments. When the centroid of stiffness of the structure has been determined, the longer distance from the centroid of stiffness to back of abutment shall be the controlling expansion length.

The Integral Abutment Pile Selection Chart is based on soils with a Qu ≤ 1.5 tsf. If the Qu at the controlling abutment is > 1.5 tsf, the EEL shall be determined by multiplying the controlling expansion length by the “Qu correction factor” which is the ratio of the Qu for that abutment over 1.5. If the EEL exceeds the highest available pile line in the chart, then an integral abutment structure is not suitable for this structure. In these cases, a joint in the structure may still be avoided by utilizing a semi-integral abutment structure. Semi-Integral abutments may be used with structures whose total structure length does not exceed 550 feet and whose skew is ≤ 45 degrees.

Piles indicated on the lines at or above the point entered in the chart may be used for the integral structure. In addition, the selected piles shall also have sufficient factored resistance for the design axial load as determined by Section 3.10.1.3 and the Structure Geotechnical Report (SGR). The structural capacity of the piles for combined bending and axial loads has already been taken into consideration in development of the limitations included herein and need not be investigated for AASHTO LRFD Strength Load Combinations.

The maximum pile spacing shall be 8 feet along the centerline of an integral abutment structure. When possible, IDOT prefers that the piles for integral abutments be designed for axial load in a manner that results with an arrangement of one pile placed under each girder line. Structures with different abutment lengths, but with the same number of piles at each abutment (i.e., flared beams), may also be considered and evaluated as possible integral abutment structures without additional adjustments for determining the centroid of stiffness of the structure, other than what was previously described. Structures with different abutment lengths and number of piles at each abutment may also be considered as a possible integral abutment structure provided the number of piles is addressed in the abutment stiffness calculations.

The Integral Abutment Pile Selection Chart is based upon the following design criteria and assumptions:

1. A cohesive soil with an average Qu ≤ 1.5 tsf in the critical pile depth.

2. The critical pile depth is the first 10 feet immediately below the abutment cap where the soil has the greatest affect on the lateral stiffness of the pile.

3. Soils with an average Qu >1.5 tsf and ≤ 3.0 tsf within the critical pile depth at an abutment may still apply the chart provided a pile stiffness modifier (M) is used in determining the controlling expansion length. If the abutment at the controlling expansion length has an average Qu > 1.5 tsf the controlling expansion length shall be additionally increased by the "Qu correction factor" which is the ratio of the Qu at the controlling abutment divided by 1.5 tsf. This yields the EEL.

4. Granular soils within the critical pile depth shall be converted to an equivalent cohesive soil by using the relationship $Qu = 0.75\ln(N) + 0.7$ where N is the SPT blow count.

5. Abutment piles shall be oriented with their webs perpendicular to the centerline of the roadway.

6. Abutments shall be parallel to each other.

7. The chart is based upon a moment connection between the pile cap and superstructure. See associated new IDOT Integral Abutment details.

8. There is no distinction between concrete and steel superstructures as it relates to the EEL.

9. The maximum end span permitted in a multi-span structure is 200 feet.

10. The maximum simple span is 170 feet.

11. End spans and simple spans exceeding 150 ft. shall only utilize HP piles of HP 12 X 74 size and larger.

12. The maximum total slab bridge length is 130 feet and the maximum individual slab span is 40 feet.

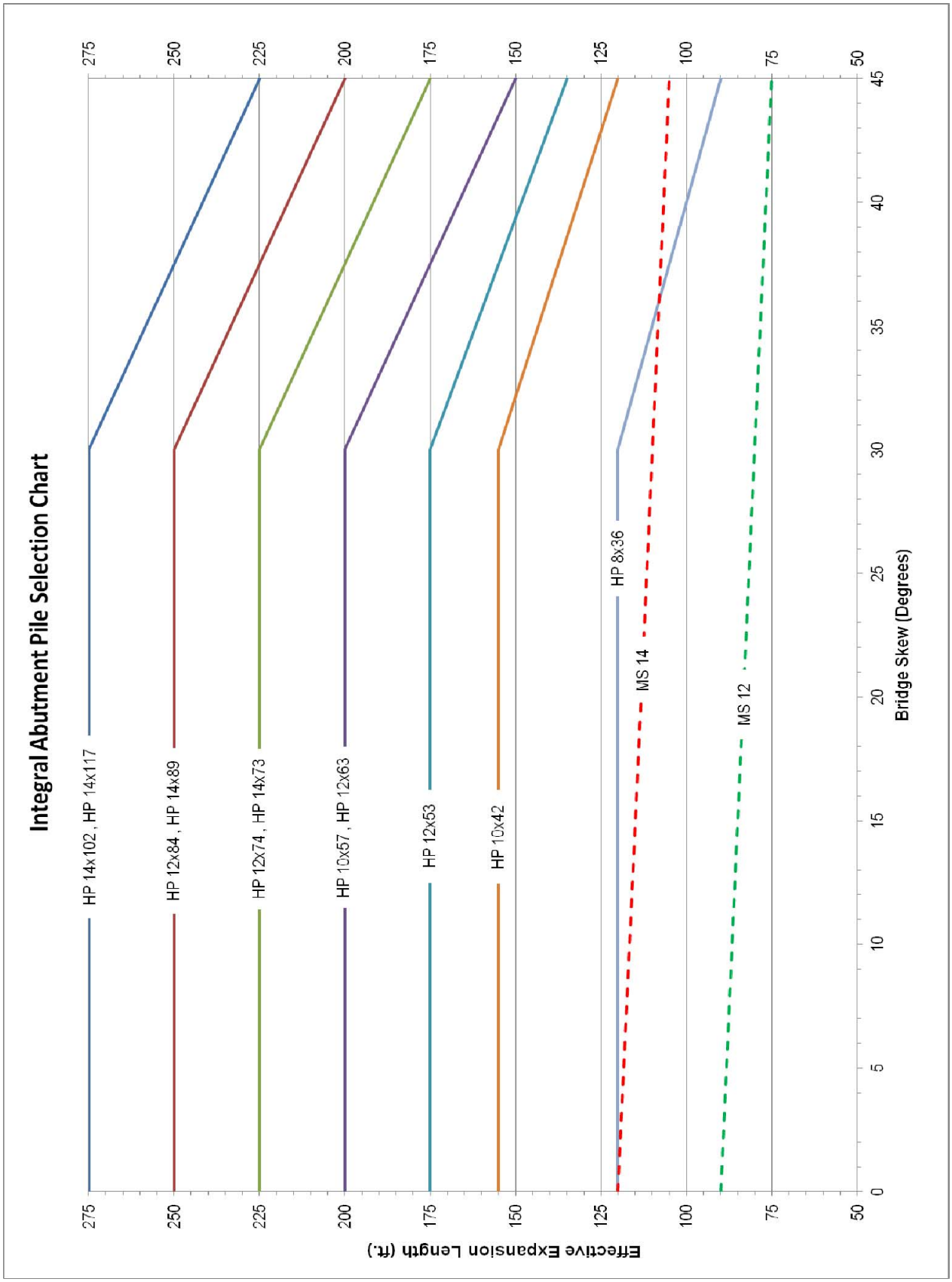
Integral Abutment Pile Selection Chart
HP 14x102 , HP 14x117
HP 12x84 , HP 14x89
HP 12x74 , HP 14x73
HP 10x57 , HP 12x63
HP 12x53
HP 10x42
HP 8x36
MS 14
MS 12
Effective Expansion Length (ft.)
Bridge Skew (Degrees)
275
250
225
200
175
150
125
100
75
50
0
5
10
15
20
25
30
35
40
45

Example 1

The structure is a continuous 450 ft. long structure consisting of three – 150 ft. spans with a zero degree skew. The structure is the same width throughout. Determine the effective expansion length for the structure and whether the structure may be integral.

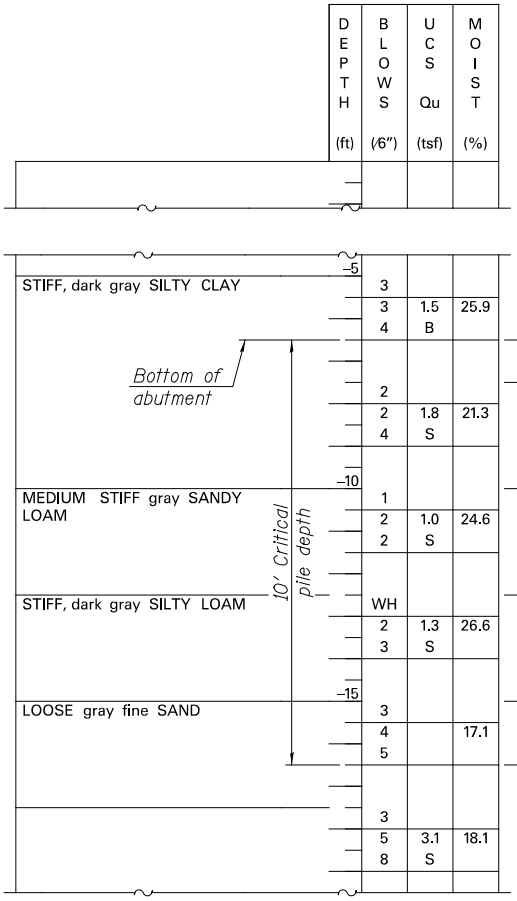

West Abutment Boring B-1

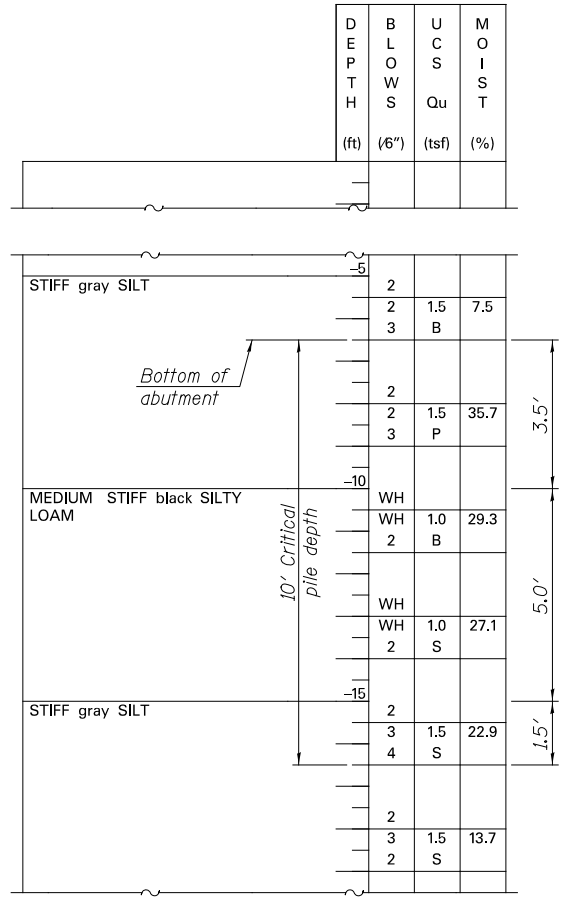

East Abutment Boring B-2

Determine the average Q_u for the critical pile depth at each abutment.

West Abutment Boring B-1

$$\mathrm{Qu} = \frac{(1.0)(1.5) + (2.5)(1.8) + (2.5)(1.0) + (2.5)(1.3) + (1.5)[0.75\ln(9) + 0.7]}{10}$$

$$= 1.53 \text{ (say 1.5 tsf.)}$$

East Abutment Boring B-2

$$\mathrm{Qu} = \frac{(3.5)(1.5) + (5.0)(1.0) + (1.5)(1.5)}{10} = 1.25 \text{ tsf.}$$

The average Q_u at each abutment is ≤ 1.5 tsf which is within the default parameters of the Integral Abutment Pile Selection Chart. Therefore, the controlling expansion length does not need to be adjusted by either the pile stiffness modifier or the Qu correction factor and the effective expansion length (EEL) may be assumed to be one half the structure length (225 ft.). Applying the EEL and skew to the Integral Abutment Pile Selection Chart indicates that the HP 12x74, HP 14x73 and all pile choices above this line may be used for an integral structure. The specific pile type shall be determined by the designer based on the pile spacing and axial load.

Example 2

Use the same geometric configuration from Example 1 except the average Qu within the critical pile depth is 1.5 tsf at the west abutment and 2.0 tsf at the east abutment. Calculate the centroid of stiffness of the structure and the controlling EEL to determine whether this structure can remain integral.

Determine the pile stiffness modifier (M) for the east abutment since it has an average Qu > 1.5 tsf.

$$\mathrm{M}_{(\mathrm{East})} = \frac{1}{1.45 - 0.3(2.0)} = 1.18$$

Assume 6 beam lines in the structure with a pile placed beneath each beam and calculate the centroid of stiffness from the west abutment.

$$\Sigma_{\mathrm{Stiff.W.\ Abut.}} = \frac{(6\ \mathrm{piles})(0\ \mathrm{ft.}) + (6\ \mathrm{piles})(1.18)(450\ \mathrm{ft.})}{(6\ \mathrm{piles}) + (6\ \mathrm{piles})(1.18)} = 243.6\ \mathrm{ft.}$$

The distance from the centroid of stiffness to the East Abutment is

450 -243.6 = 206.4 ft.

The distance from the centroid of stiffness to the west abutment is longer; therefore this is the controlling expansion length. Since the Qu for the west abutment is ≤ 1.5 tsf, no Qu correction factor adjustment to this length is necessary for determining the EEL. The EEL for the structure is therefore 243.6 ft. This structure may be an integral structure based on the chart.

<u>Note</u>: If Example 2 had an average Qu within the critical pile depth of 2.0 tsf at the west abutment and 2.5 tsf at the east abutment, the west abutment would also require a pile stiffness modifier which results in the distance from the centroid of stiffness to the west abutment and controlling expansion length only increasing to 246.6 ft. However, this length would need to be adjusted for the Qu correction factor at the west abutment by multiplying by the ratio of (2.0 tsf/1.5), the Qu at the abutment divided by the base Qu of the design chart. The EEL would therefore be 328.8 ft. and the Integral Abutment Pile Selection Chart would indicate that this structure could not be integral.

Example 3

This example is similar to Example 2 (a continuous 450 ft. long structure consisting of 3 – 150 ft. spans; average Qu at west abutment = 1.5 tsf and average Qu at east abutment = 2.0 tsf), except the structure is flared. The west abutment is wider than the east abutment and has 10 piles compared to 6 piles at the east abutment.

Determine the centroid of stiffness from the west abutment.

$$\Sigma_{\text{Stiff.W. Abut.}} = \frac{(10\text{ piles})(0\text{ ft.})+(6\text{ piles})(1.18)(450\text{ ft.})}{(10\text{ piles})+(6\text{ piles})(1.18)} = 186.5\text{ ft.}$$

The distance from the centroid of stiffness to the centerline of the east abutment is 263.5 ft. and is the controlling expansion length. However, because the Qu at the east abutment is 2.0 tsf, the Qu correction factor would cause the EEL to be:

$$(263.5\text{ ft.})\frac{(2.0\text{ tsf.})}{(1.5)} = 351.3\text{ ft.}$$

The Integral Abutment Pile Selection Chart indicates that this structure cannot be integral.

Implementation

The figures in this memorandum illustrate the new integral policies and also contain designer notes for application. Several CADD libraries of base sheets have also been updated for the new integral policies and are available on the Department's website. The current integral details will remain available in separate CADD libraries during the transition period. The new integral abutment policies and details shall be effective for all projects with TSL's approved after August 31, 2012. Projects with TSL's approved prior to this date may also utilize the new integral policies with approval from the District or owner.

KLR/kkt12.3IntegralAbutment-20120725

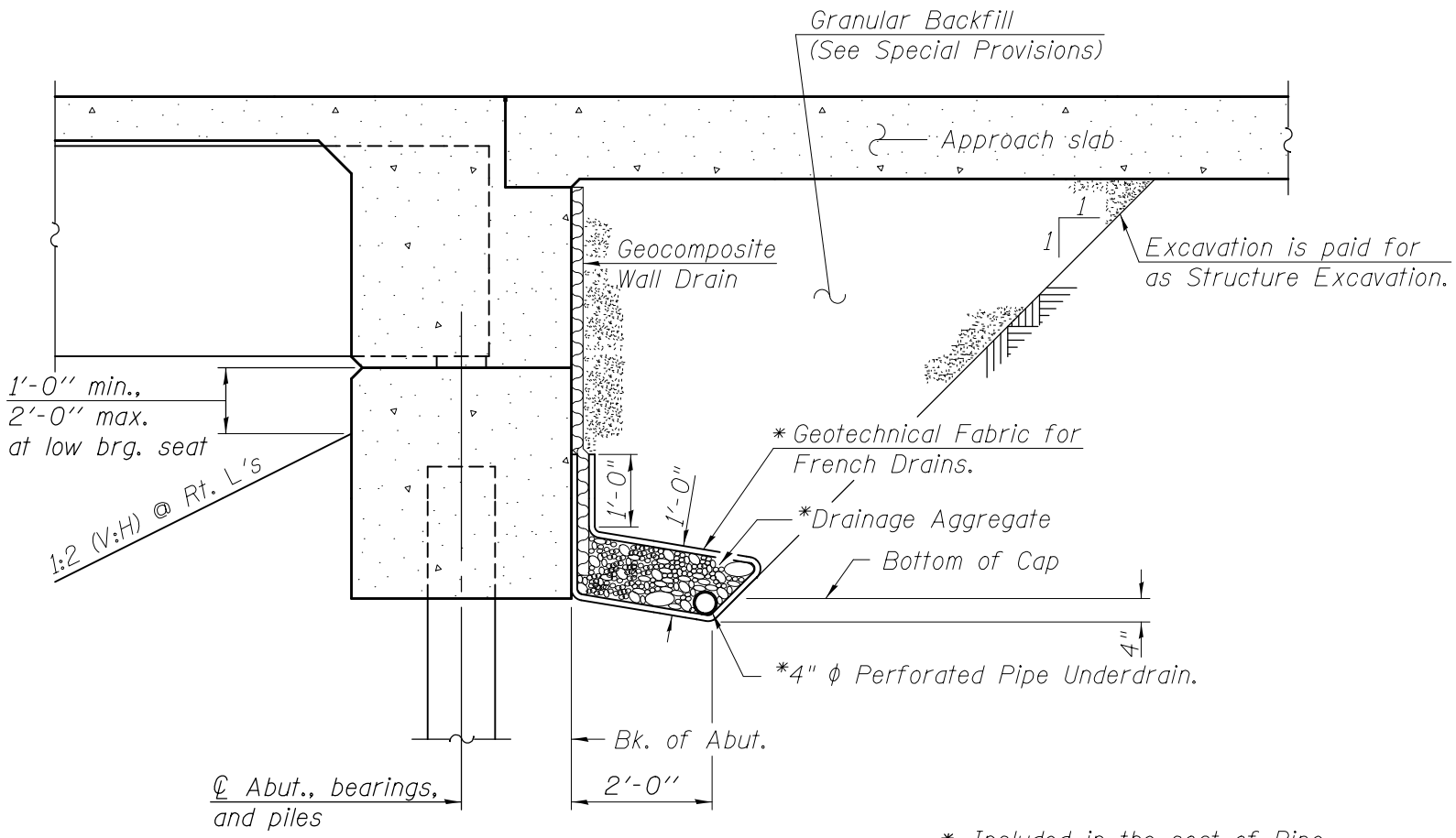

* Included in the cost of Pipe Underdrains for Structures. (See Special Provisions).

All drainage system components shall extend to 2'-0" from the end of each wingwall except an outlet pipe shall extend until intersecting with the side slopes. The pipes shall drain into concrete headwalls. (See Article 601.05 of the Standard Specifications and Highway Standard 601101)

TYPICAL SECTION THRU
INTEGRAL ABUTMENT

Figure 1

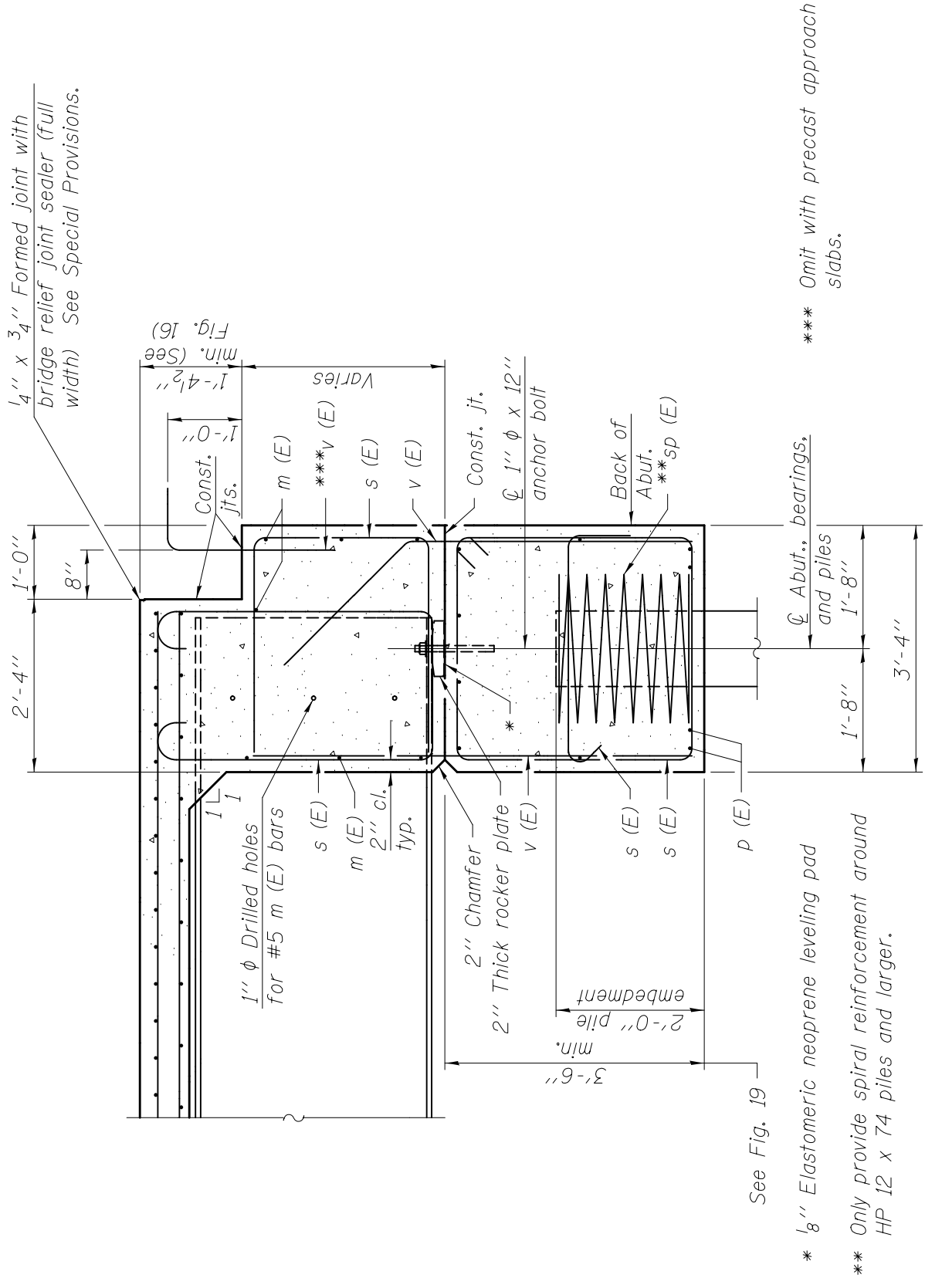

INTEGRAL ABUTMENT FOR STEEL BEAMS 24'' THRU 40''

Figure 2

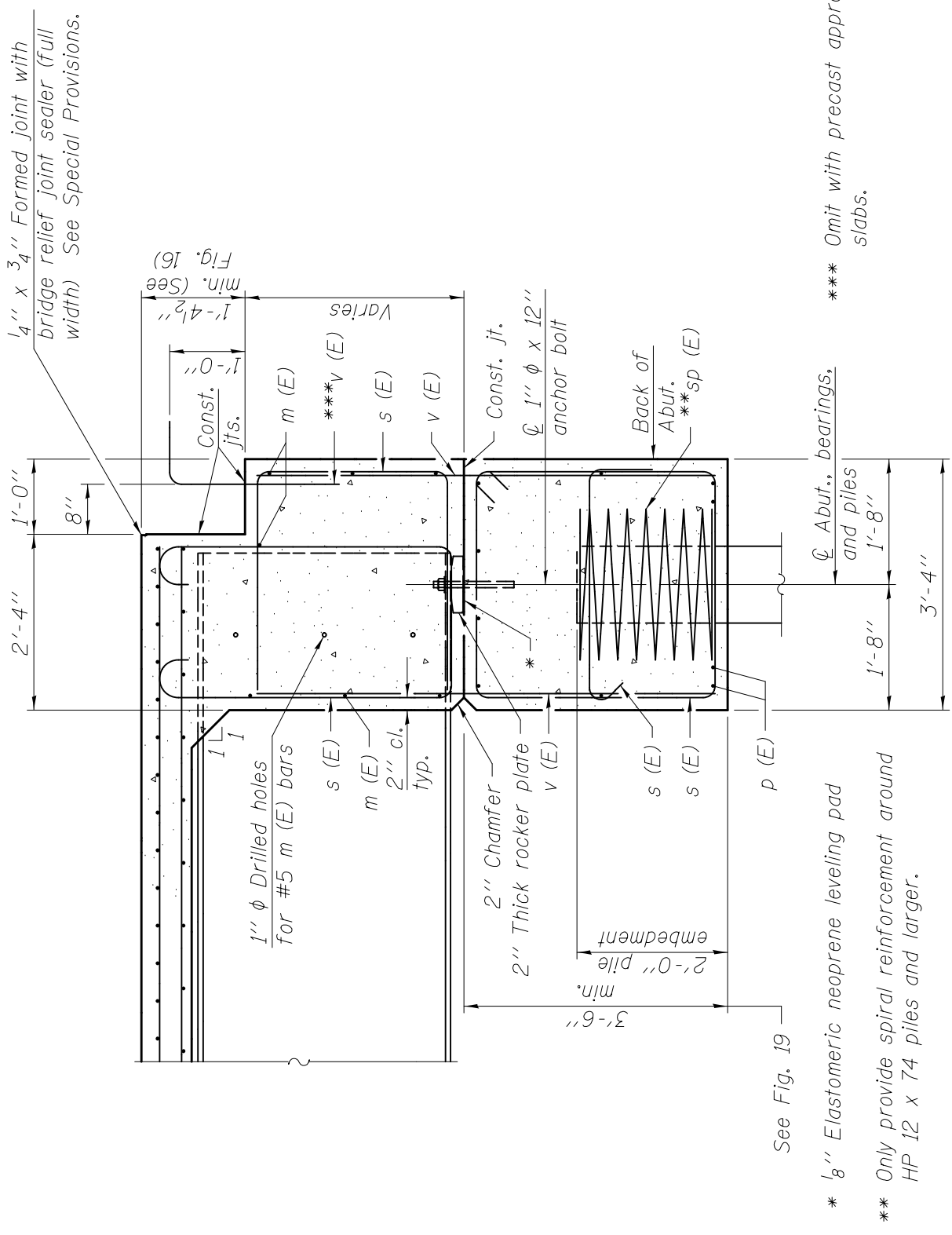

INTEGRAL ABUTMENT FOR STEEL BEAMS GREATER THAN 40''

Figure 3

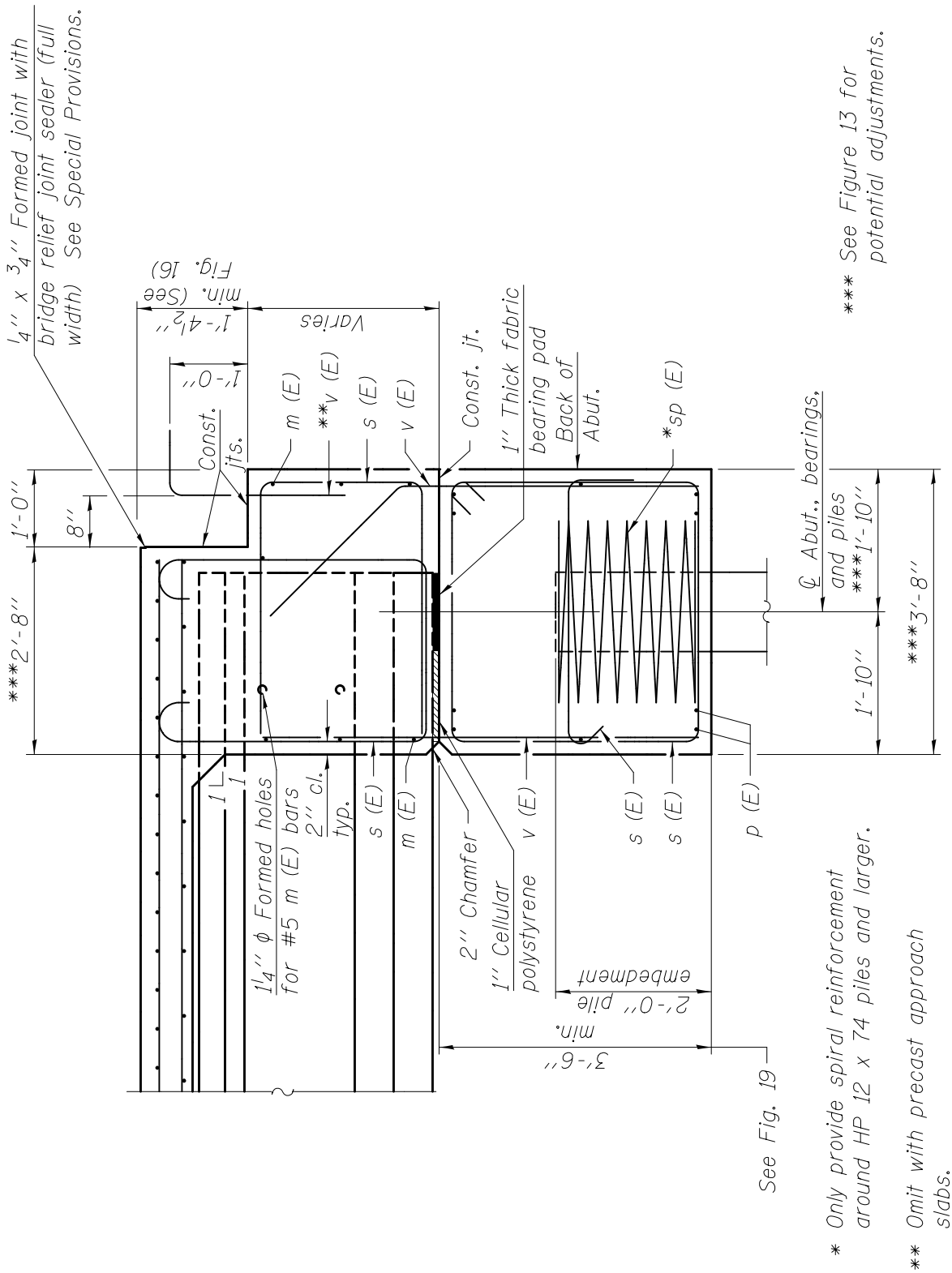

INTEGRAL ABUTMENT FOR CONCRETE BEAMS 36''

Figure 4

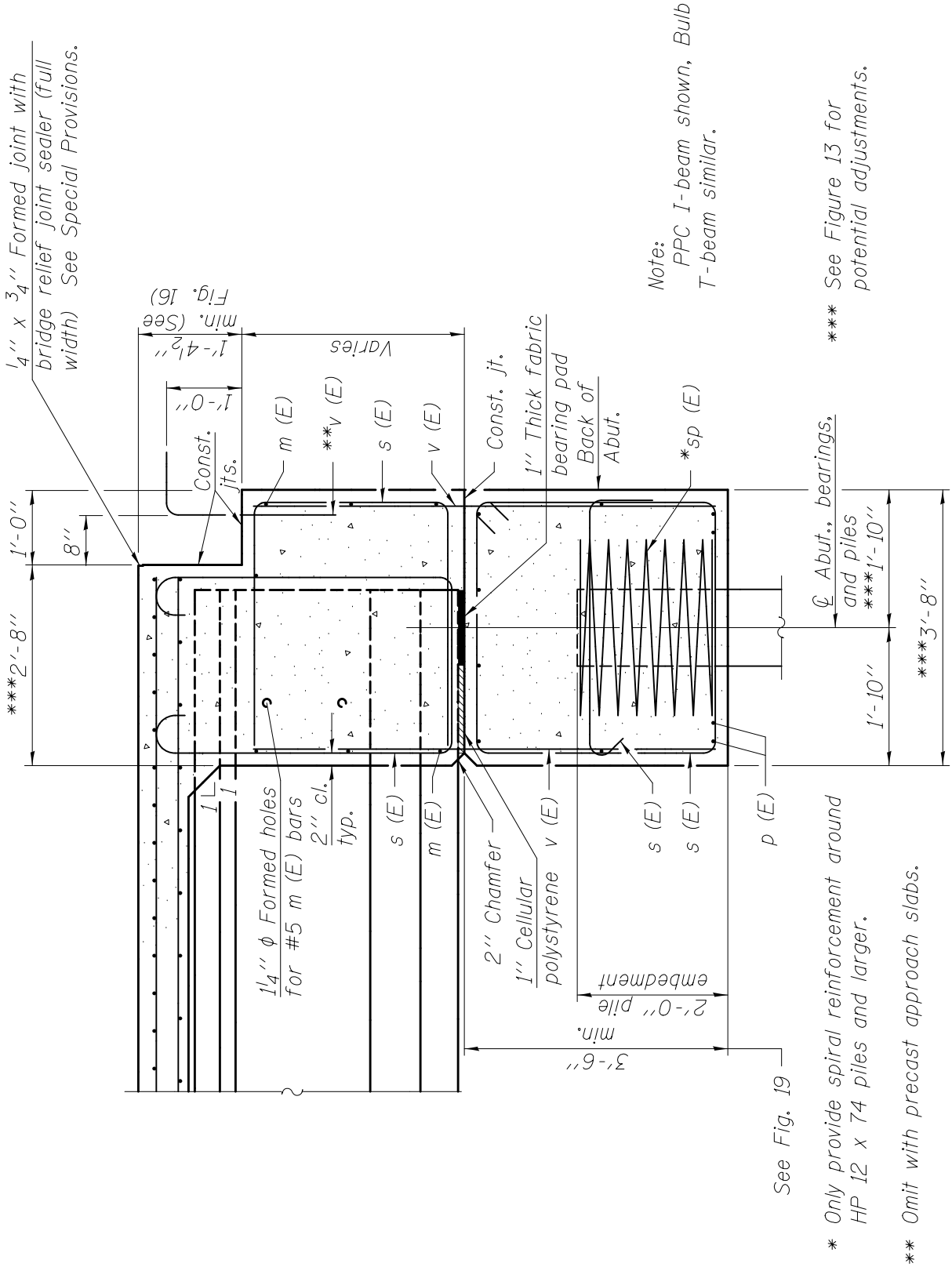

INTEGRAL ABUTMENT FOR CONCRETE BEAMS 42'' THRU 72''

Figure 5

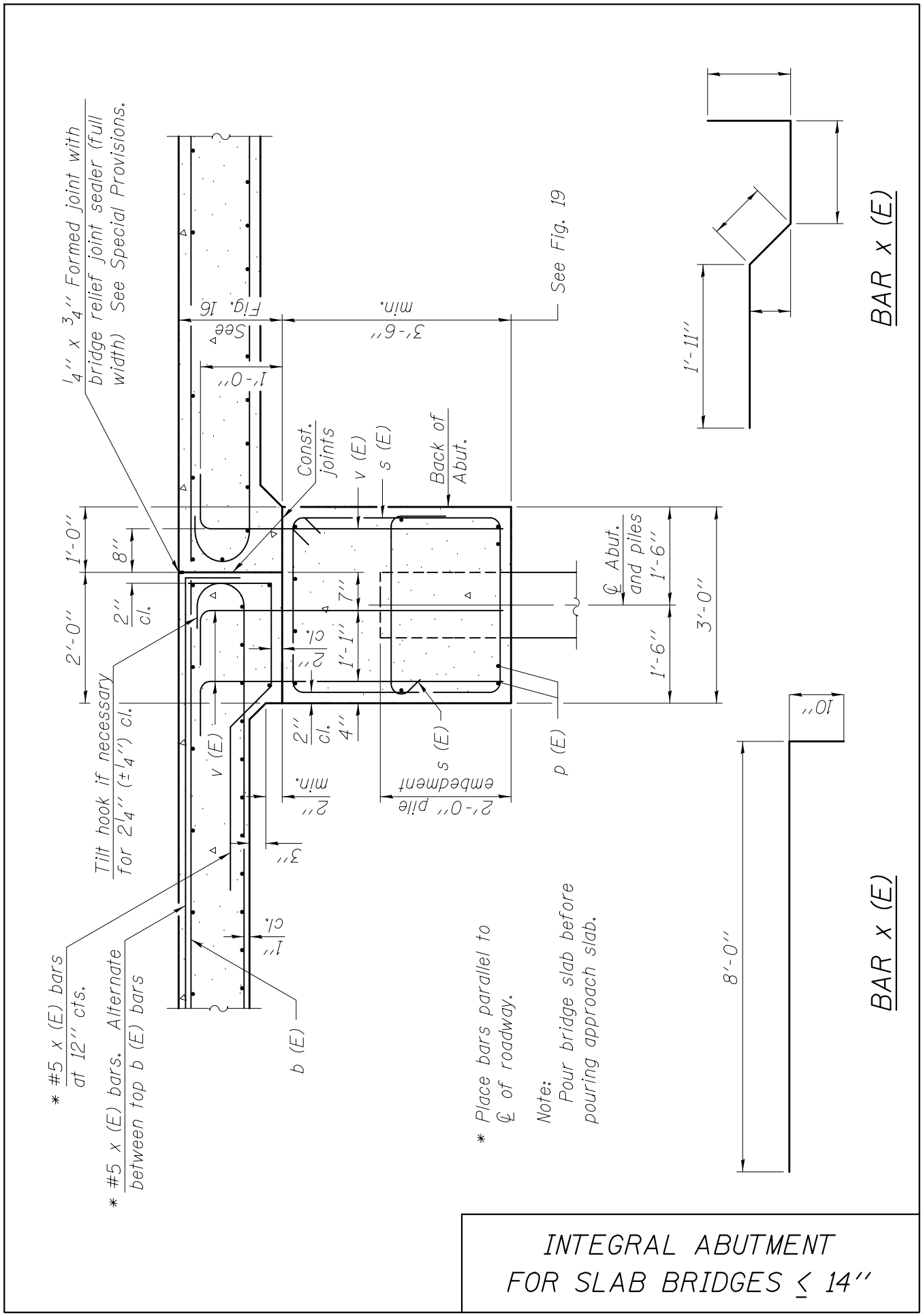
1/4'' x 3/4'' Formed joint with bridge relief joint sealer (full width) See Special Provisions.
See Fig. 16
1'-0''
3'-6'' min.
See Fig. 19
Const. joints
v (E)
s (E)
Back of Abut.
1'-0''
8''
2''
cl.
2'-0''
Tilt hook if necessary for 2 1/4'' (± 1/4'') cl.
7''
1'-1''
2''
cl.
℄ Abut. and piles
1'-6''
1'-6''
3'-0''
2''
cl.
4''
v (E)
2'-0'' pile embedment
s (E)
p (E)
2'' min.
3''
1''
cl.
b (E)
* #5 x (E) bars at 12'' cts.
* #5 x (E) bars. Alternate between top b (E) bars
* Place bars parallel to ℄ of roadway.
Note:
Pour bridge slab before pouring approach slab.
1'-11''
BAR x (E)
10''
8'-0''
BAR x (E)
INTEGRAL ABUTMENT
FOR SLAB BRIDGES ≤ 14''

Figure 6

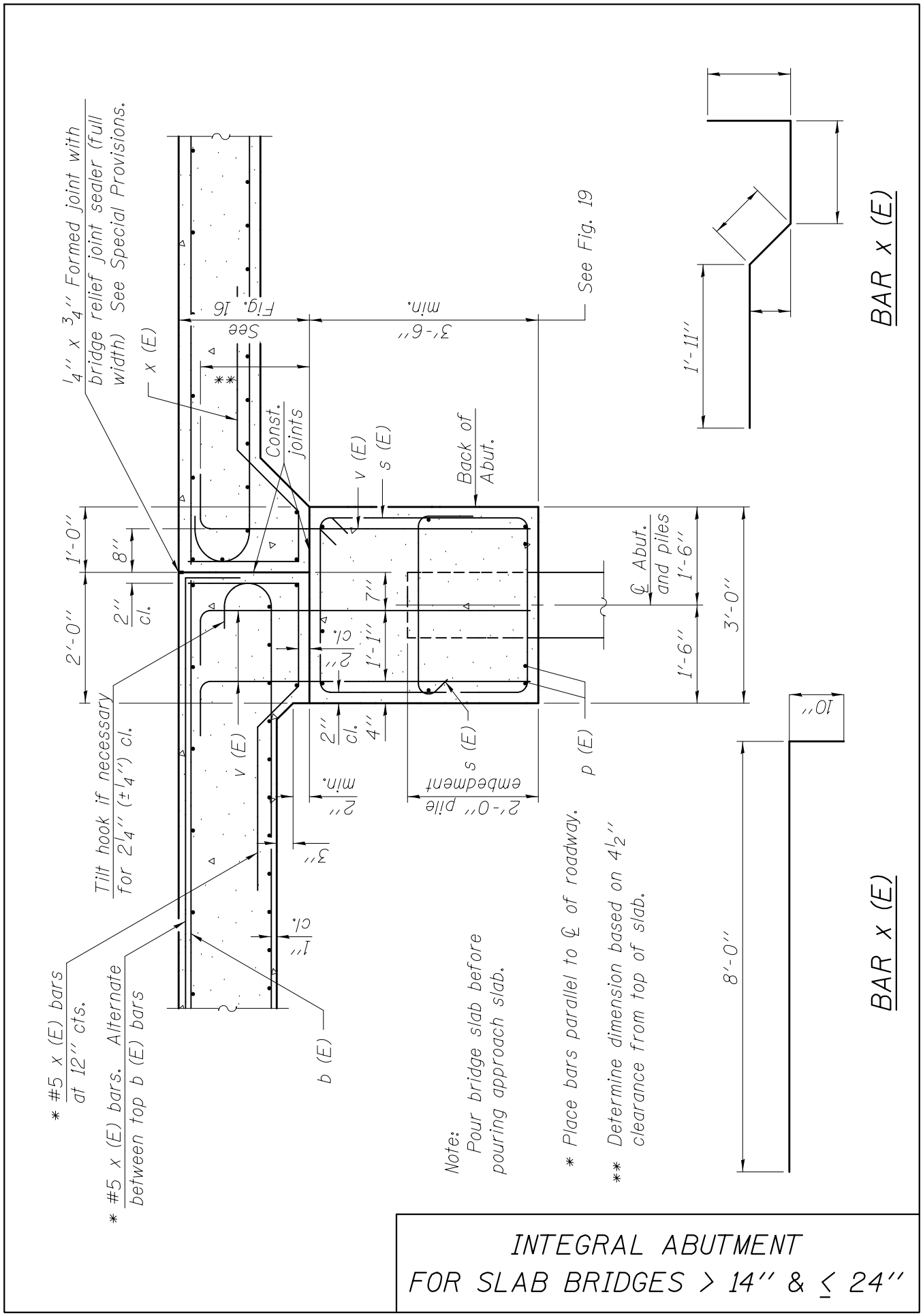
1/4'' x 3/4'' Formed joint with bridge relief joint sealer (full width) See Special Provisions.
x (E)
See Fig. 16
3'-6'' min.
See Fig. 19
Const. joints
v (E)
s (E)
Back of Abut.
1'-0''
8''
2'-0''
2'' cl.
7''
1'-1''
2'' cl.
℄ Abut. and piles
1'-6''
1'-6''
3'-0''
Tilt hook if necessary for 2 1/4'' (± 1/4'') cl.
v (E)
2'' cl.
4''
s (E)
p (E)
2'-0'' pile embedment
2'' min.
3''
1'' cl.
b (E)
* #5 x (E) bars at 12'' cts.
* #5 x (E) bars. Alternate between top b (E) bars
Note: Pour bridge slab before pouring approach slab.
* Place bars parallel to ℄ of roadway.
** Determine dimension based on 4 1/2'' clearance from top of slab.
1'-11''
BAR x (E)
10''
8'-0''
BAR x (E)
INTEGRAL ABUTMENT
FOR SLAB BRIDGES > 14'' & ≤ 24''

Figure 7

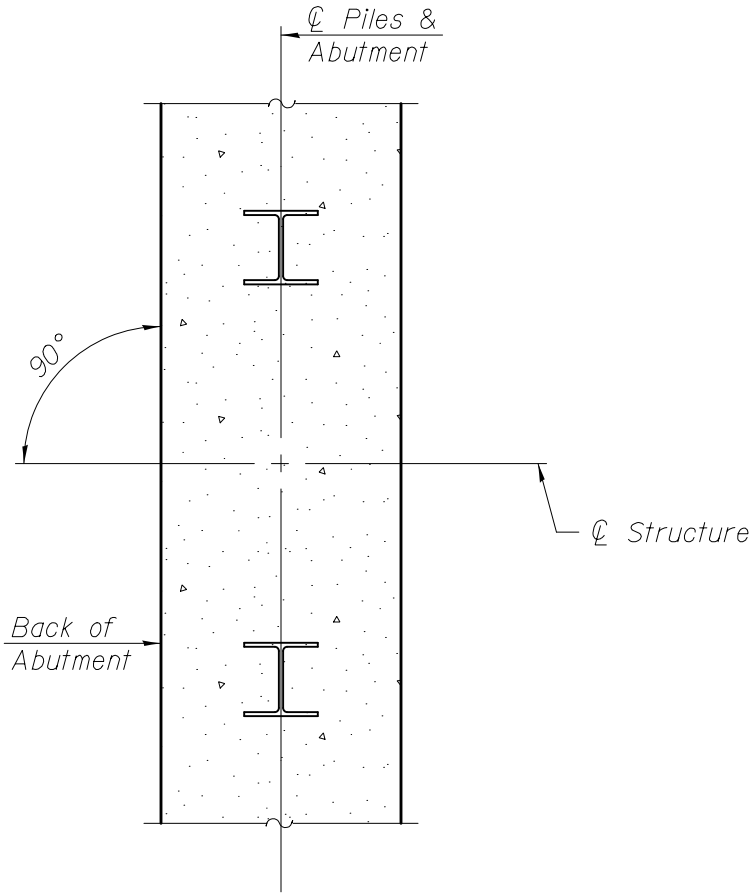

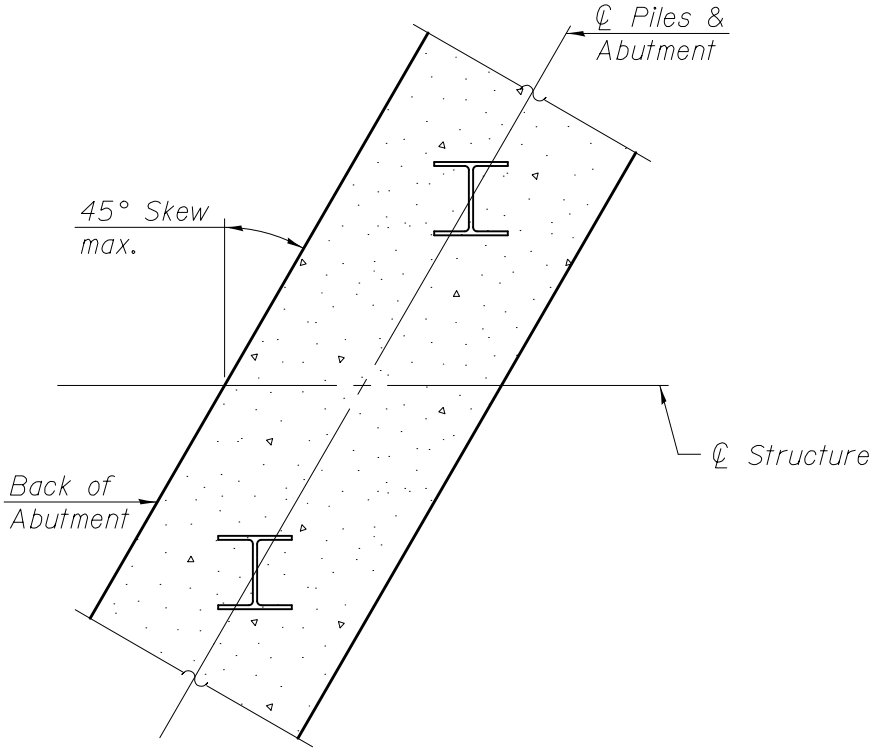

Note:
For integral abutments, the pile web is always perpendicular to the ℄ of structure.

INTEGRAL ABUTMENT
PILE ORIENTATION

Figure 8

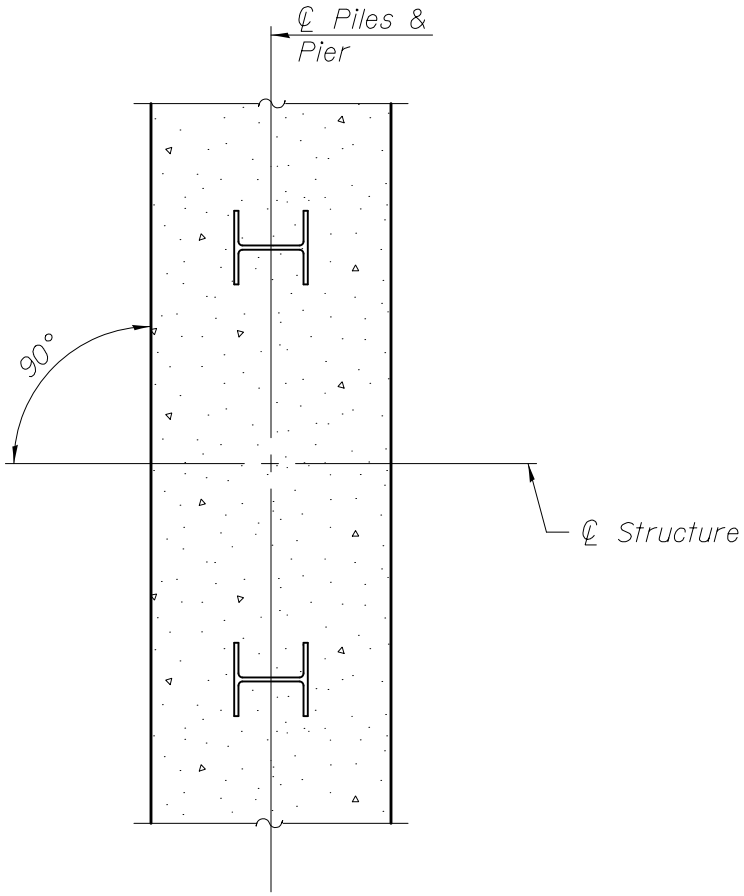

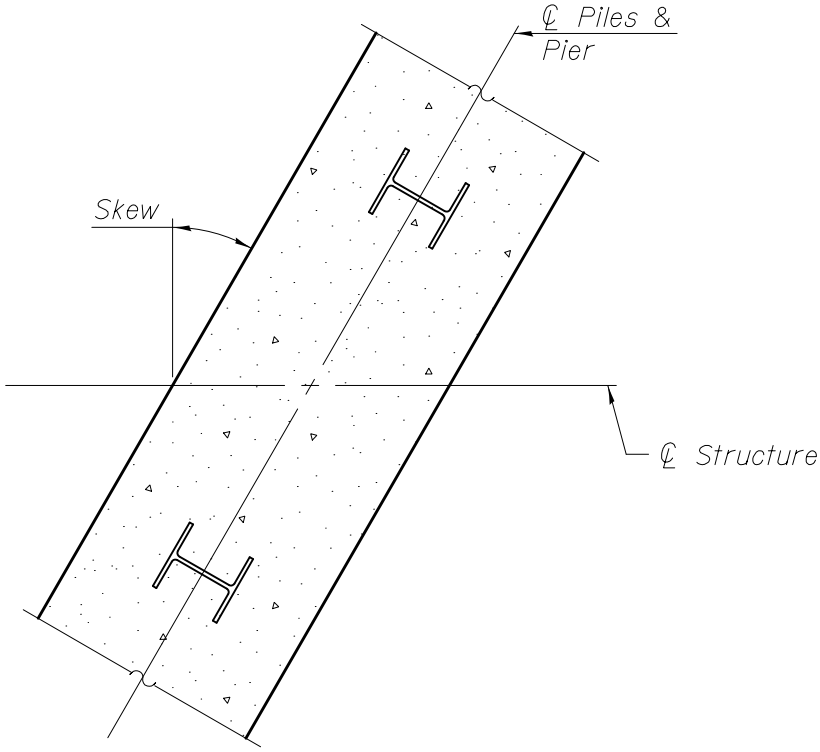

PIER PILE
ORIENTATION

Figure 9

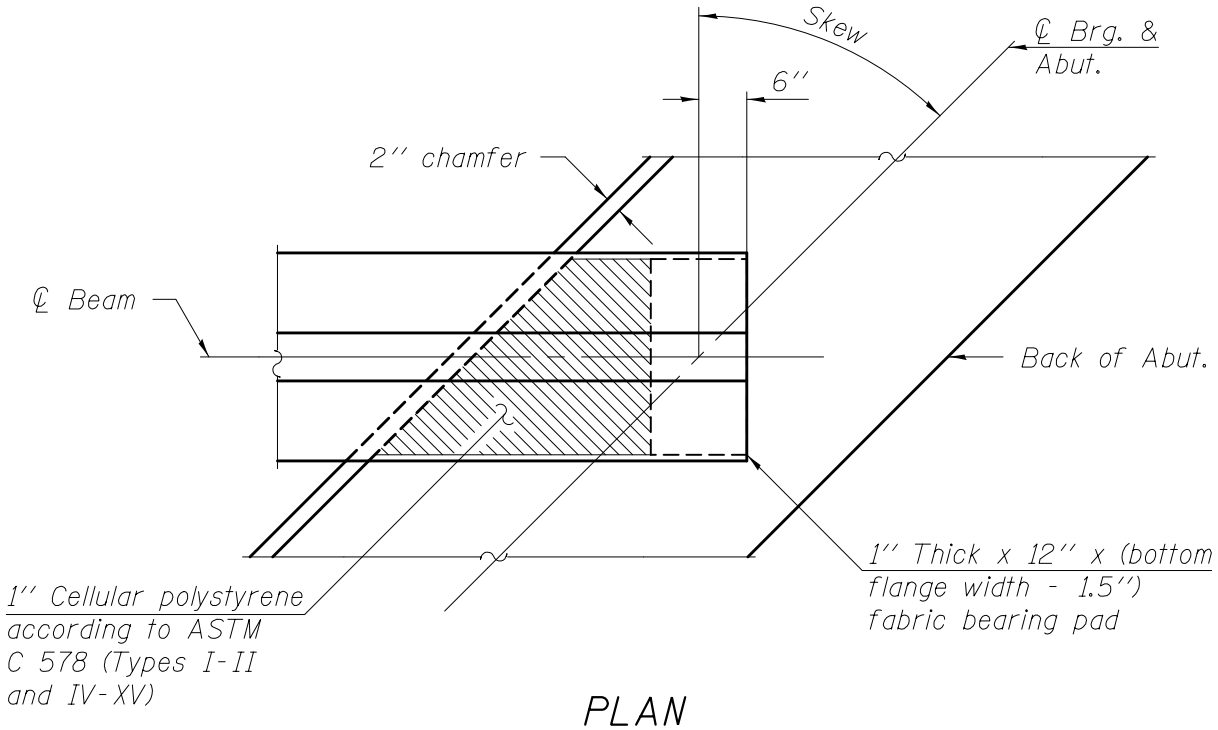

PLAN

(Showing bottom flange of PPC beam at integral abutment)

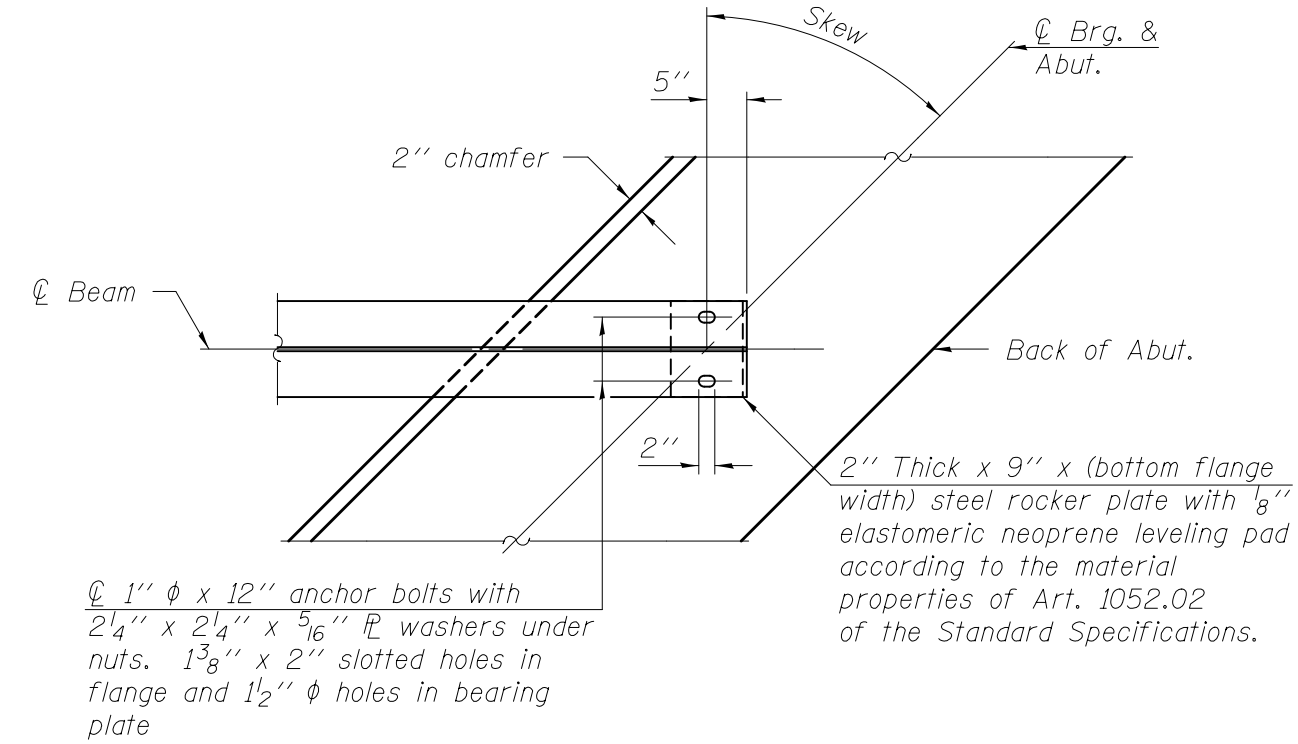

PLAN

(Showing bottom flange of steel beam at integral abutment)

INTEGRAL ABUTMENT
BEAM LOCATION

Figure 10

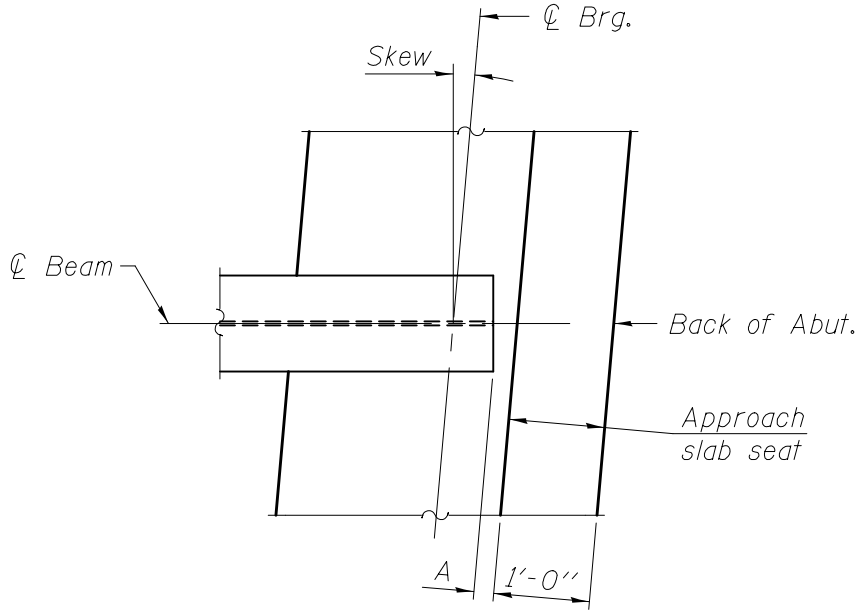

TOP FLANGE PLAN - NO CLIP

(Showing top flange of steel beam at integral abutment)

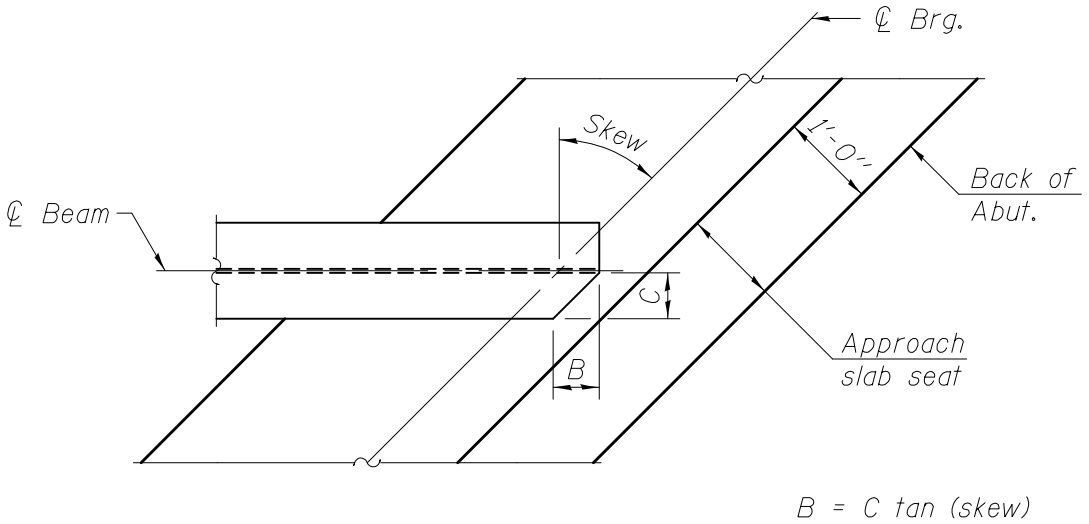

TOP FLANGE PLAN - CLIPPED

(Showing top flange of steel beam at integral abutment)

Notes:

Clip top flange when dimension "A" is less than 1''. Calculate dimension "B" based on skew angle. Dimension "C" is half the top flange width minus half the web thickness.

TOP FLANGE CLIP DETAIL
FOR STEEL BEAMS
ON INTEGRAL ABUTMENTS

Figure 11

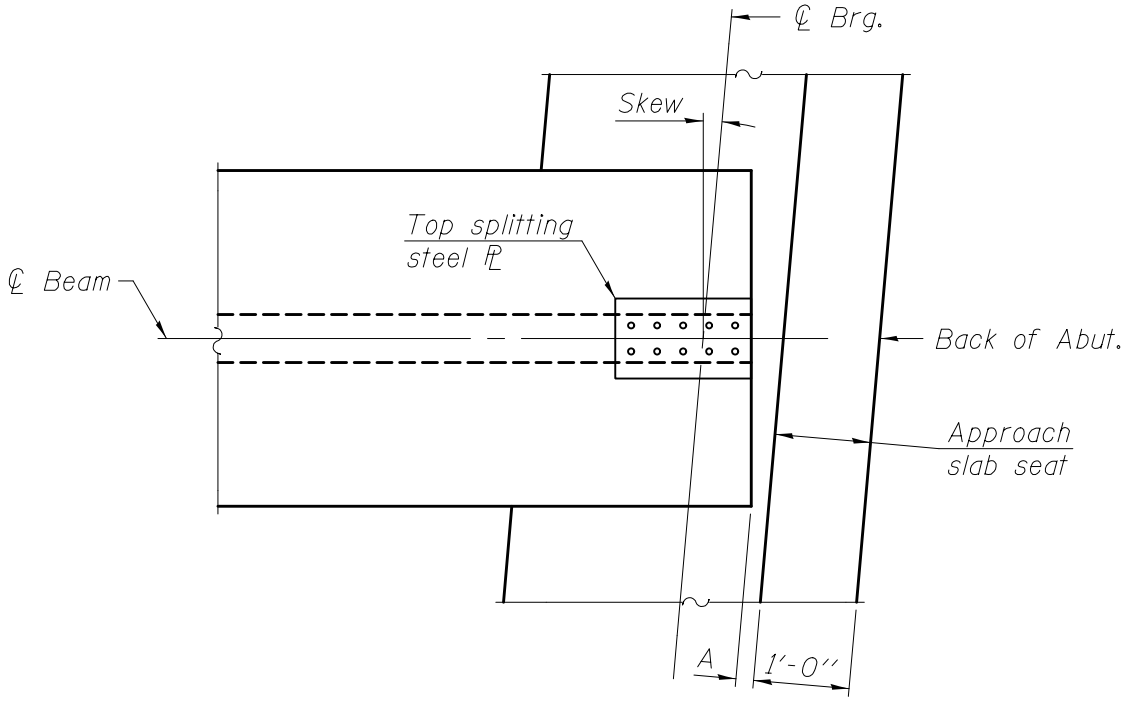

TOP FLANGE PLAN - NO CLIP

(Showing top flange of Bulb T-beam at integral abutment. PPC I-beams similar)

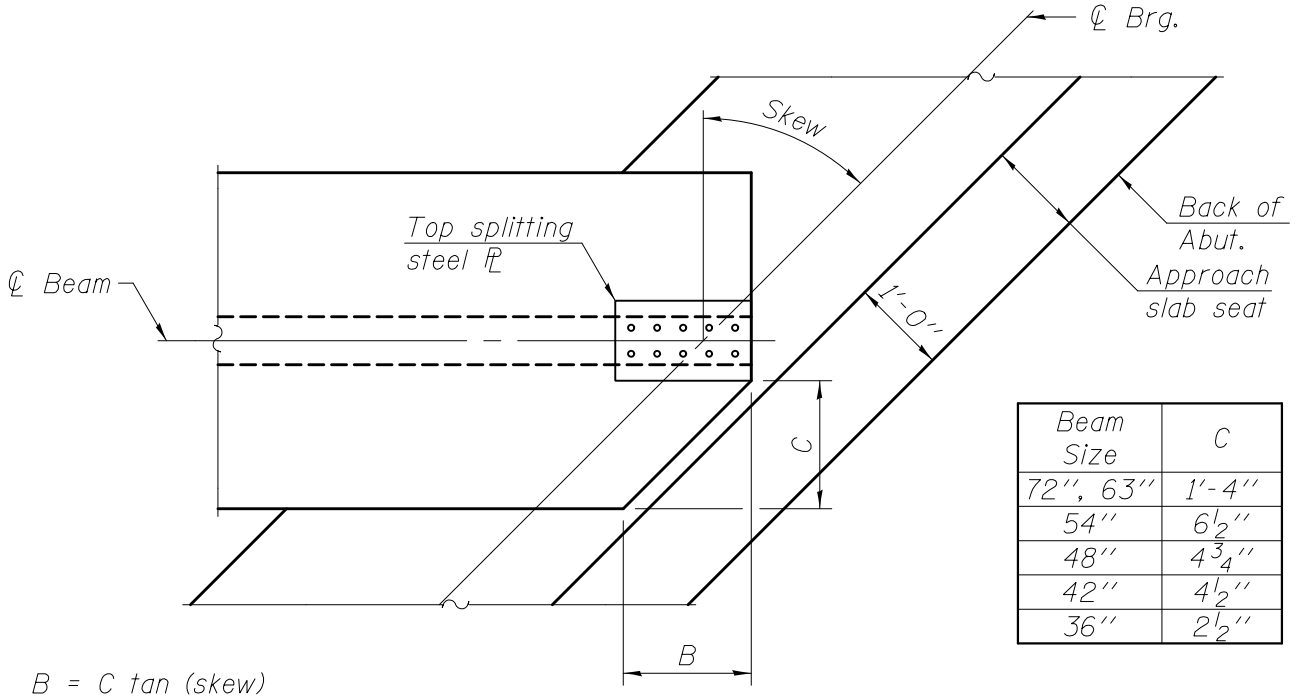

Beam Size	C
72", 63"	1'-4"
54"	6 1/2"
48"	4 3/4"
42"	4 1/2"
36"	2 1/2"

B = C tan (skew)

TOP FLANGE PLAN - CLIPPED

(Showing top flange of Bulb T-beam at integral abutment. PPC I-beams similar)

Note:
Clip top flange when dimension "A" is less than 1". Calculate dimension "B" based on skew angle. Dimension "C" is provided in table.

TOP FLANGE CLIP DETAIL FOR PPC BEAMS ON INTEGRAL ABUTMENTS

Figure 12

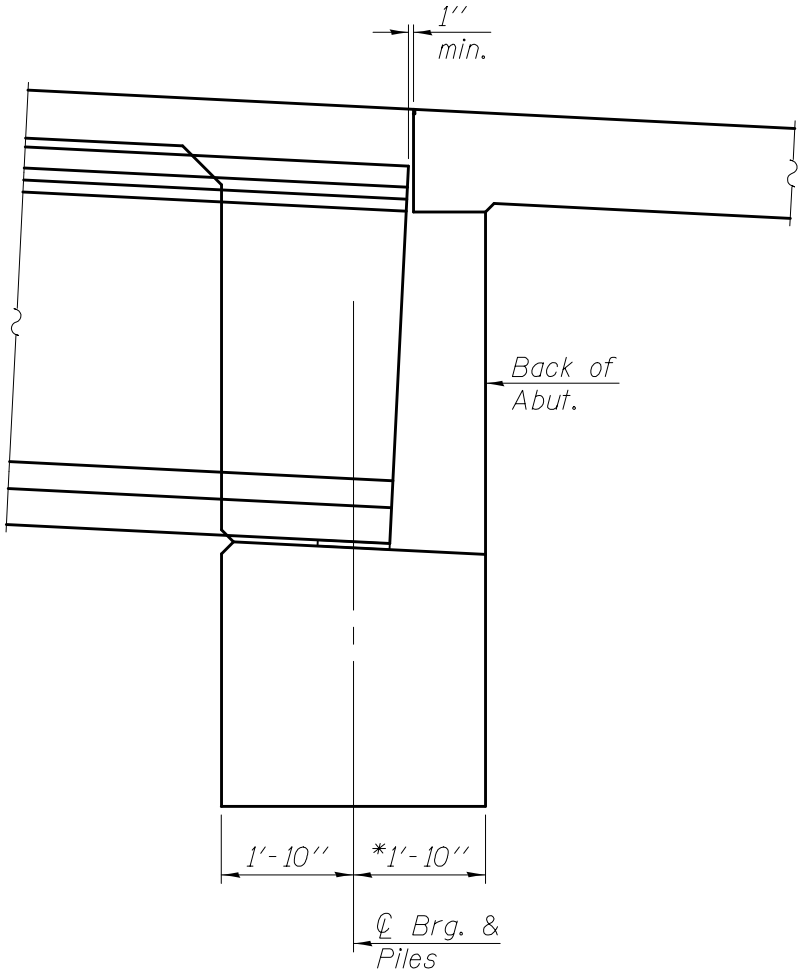

SECTION THRU ABUTMENT

(Showing bulb T-beam on a steep grade)

* Increase as needed to maintain 1'' minimum clearance between beam and approach pavement. The skew angle will also need to be considered (See top flange clip details) as well as the camber.

Notes:

The grade of the bridge shall be considered when detailing integral abutments with PPC beams. Since the beams are cast such that the beam ends are 90 degrees to the top and bottom flanges the beam ends will not be vertical if the beams are placed on a grade. In addition beam camber will cause further rotation of the beam end.

Abutment caps shall be sloped to match the grade when the change in elevation exceeds $\frac{1}{4}$'' from the front face of abutment to the end of the beam. This is done to ensure the fabric bearing pad and polystyrene are under a more uniform bearing pressure. Reinforcement as shown on the base sheets may need to be adjusted to accommodate the slope.

Integral abutments with steel beams do not need these adjustments since the beam ends can be clipped vertically and the steel rocker plate can accommodate grades.

INTEGRAL ABUTMENT DETAILS FOR PPC BEAMS ON LARGE GRADES

Figure 13

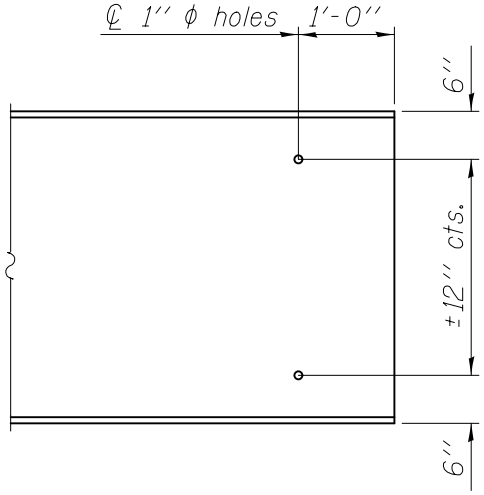

END ELEVATION

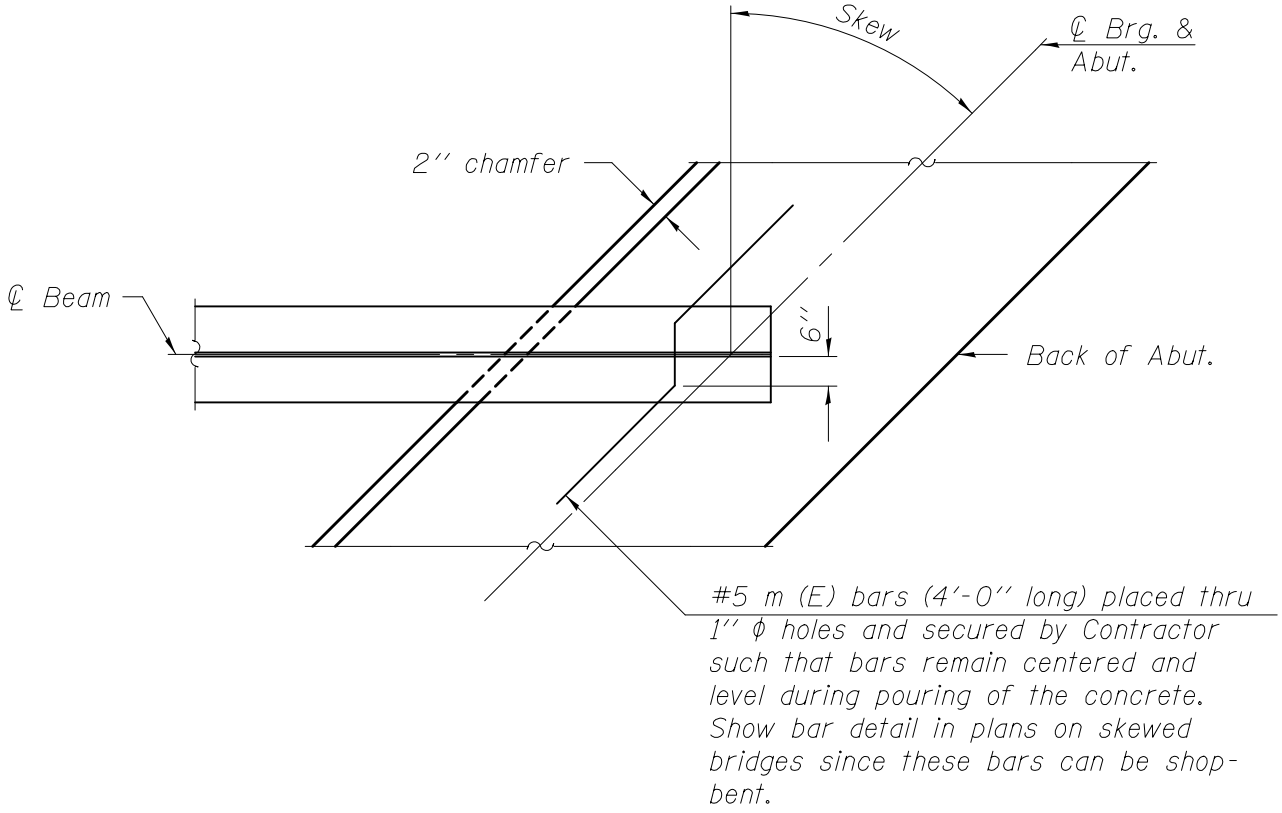

PLAN

(Showing bottom flange of beam at integral abutment)

STEEL BEAM TO DIAPHRAGM
CONNECTION DETAIL
FOR INTEGRAL ABUTMENTS

Figure 14

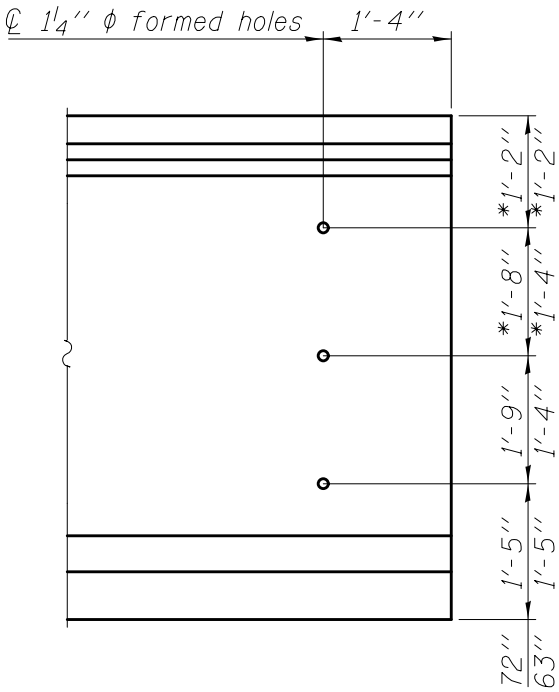

END ELEVATION

(Bulb T-beam)

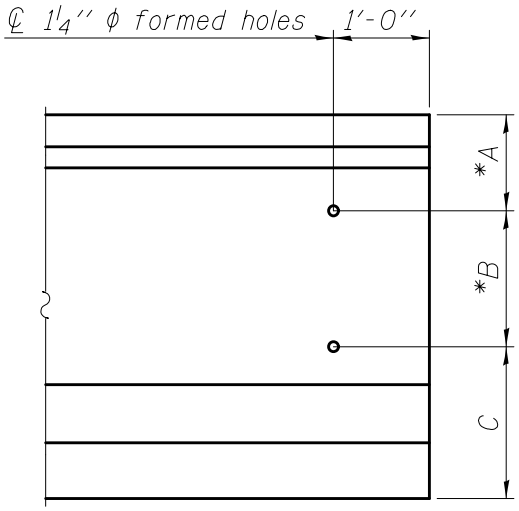

END ELEVATION

(PPC I-beam)

* Adjust these dimensions to miss draped strands.

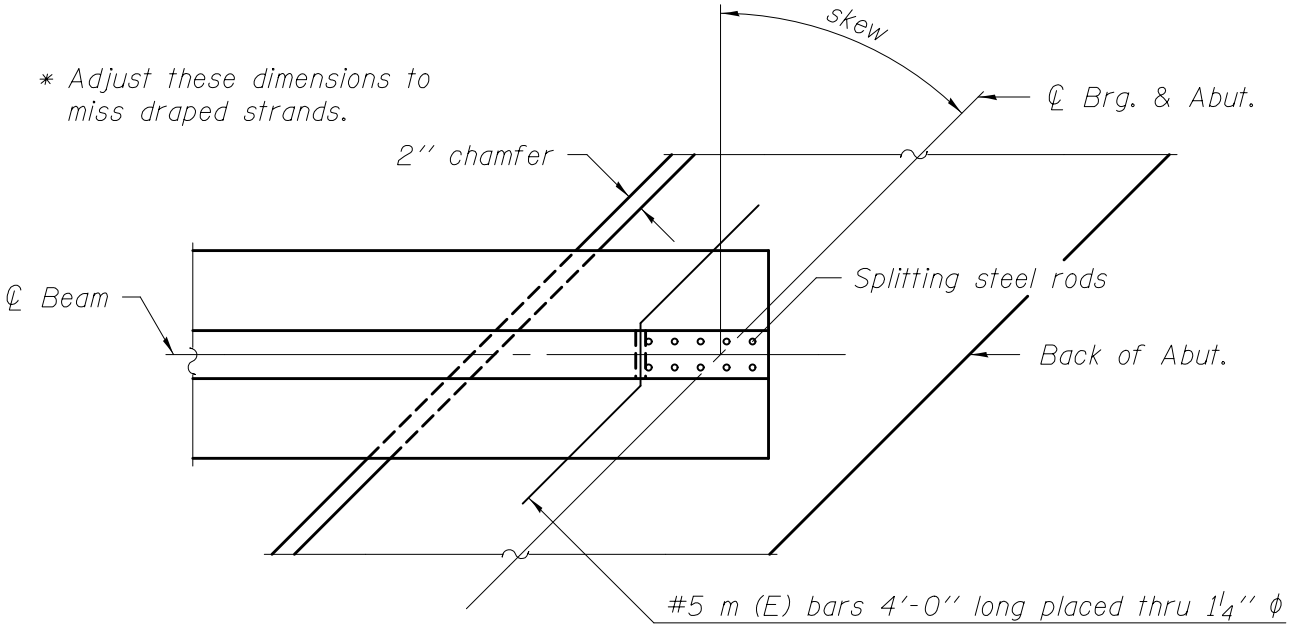

#5 m (E) bars 4′-0″ long placed thru 1¼″ ϕ formed holes and secured by Contractor such that bars remain centered and level during pouring of the concrete. Bend in field to match skew

PLAN

(Showing bottom flange of beam at integral abutment)

Beam Size	A	B	C
36″	10″	11″	1′-3″
42″	10″	1′-3″	1′-5″
48″	1′-0″	1′-5″	1′-7″
54″	1′-0″	1′-11″	1′-7″

PPC BEAM TO DIAPHRAGM CONNECTION DETAIL FOR INTEGRAL ABUTMENTS

Figure 15

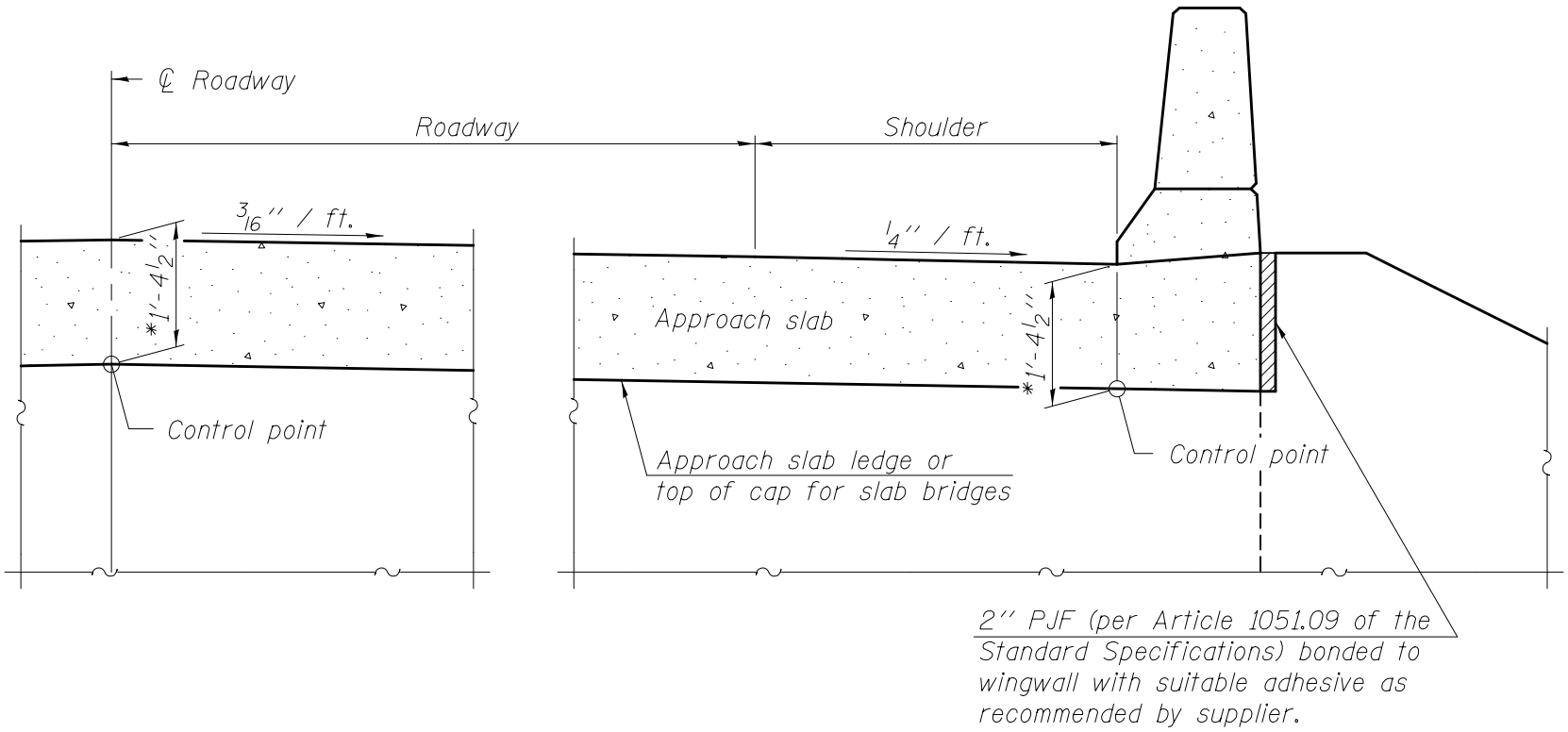

ELEVATION

(Looking at back of abutment)

* For slab bridges, this dimension will likely be larger based on the summation of bridge slab thickness and haunch.

Note:
The approach slab ledge shall have a constant slope determined from the control points shown.

APPROACH SLAB
LEDGE DETAILS

Figure 16

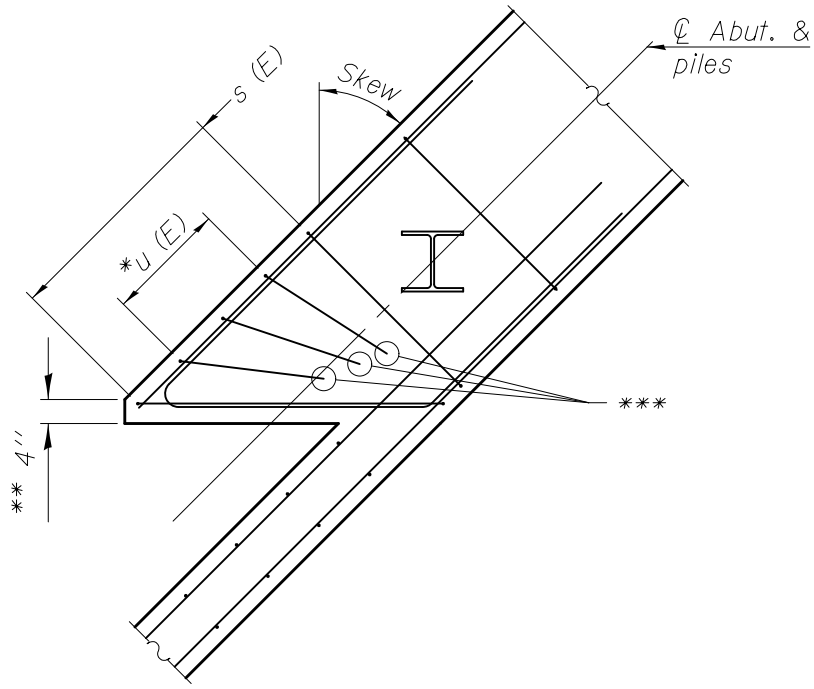

ABUTMENT CAP PLAN

* Add u (E) bars when the spacing between s (E) bars exceeds what is required by design or 12''.

** Block out sharp corner of abutment cap and diaphragm as shown for skews 25 degrees and larger.

*** Detail legs of u (E) bars such that they do not all come to a point causing congestion.

CORNER TREATMENT OF
SKEWED INTEGRAL ABUTMENTS

Figure 17

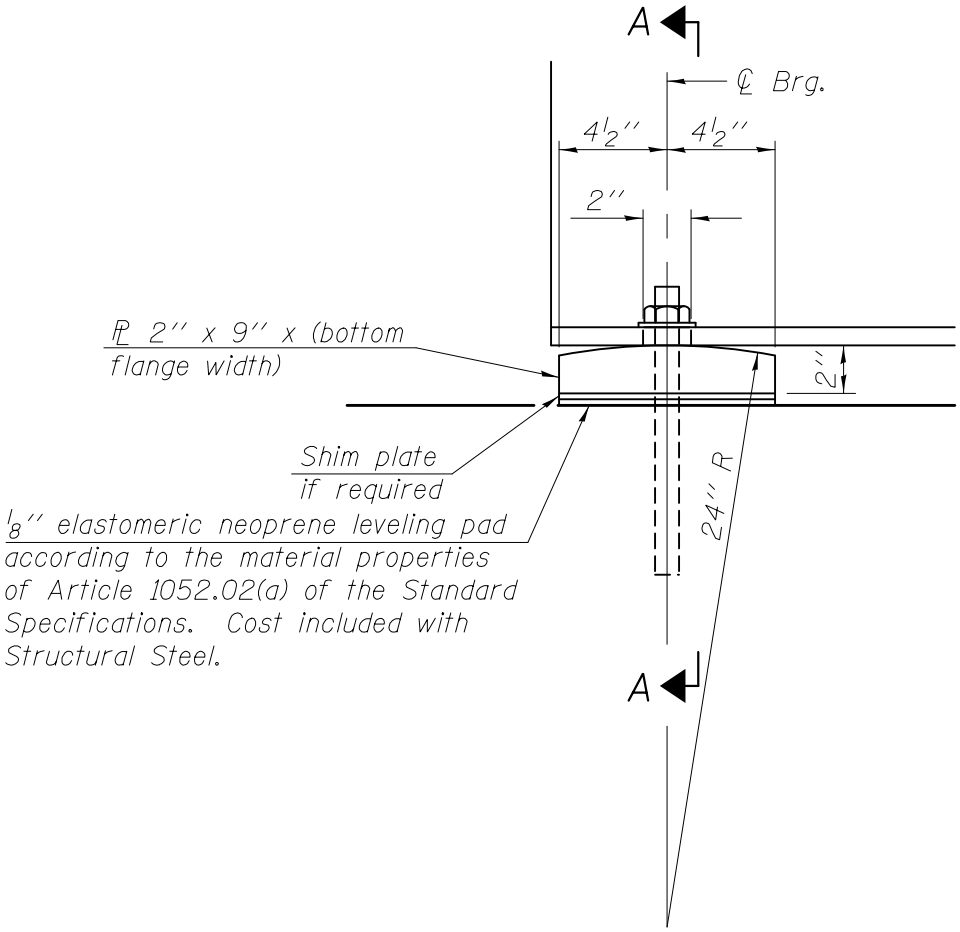

ELEVATION

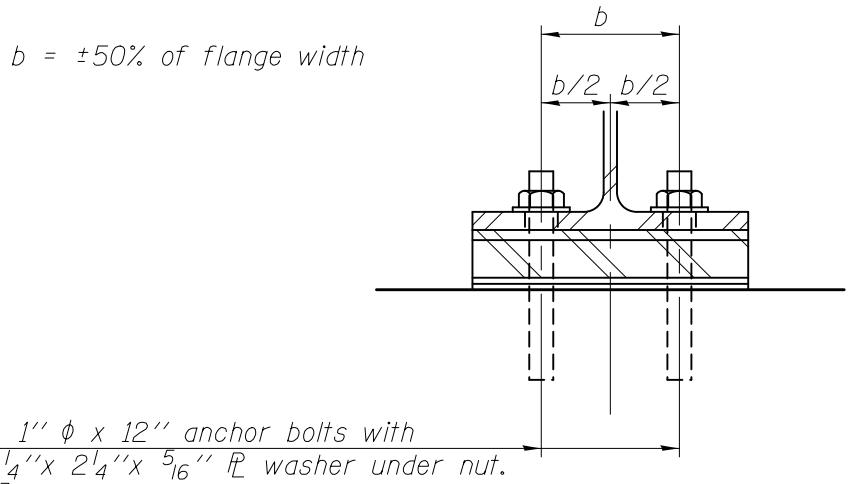

SECTION A-A

INTEGRAL ABUTMENT BEARING FOR STEEL BEAMS

Figure 18

Riprap Class	t_R	t_B	A	B
A4	16''	6''	4'	8'
A5	22''*	8''	5'	10'
A6	26''*	10''	6'	12'
A7	30''*	12''	7'	14'

* Check abutment depth and increase as necessary to match depth of riprap and bedding

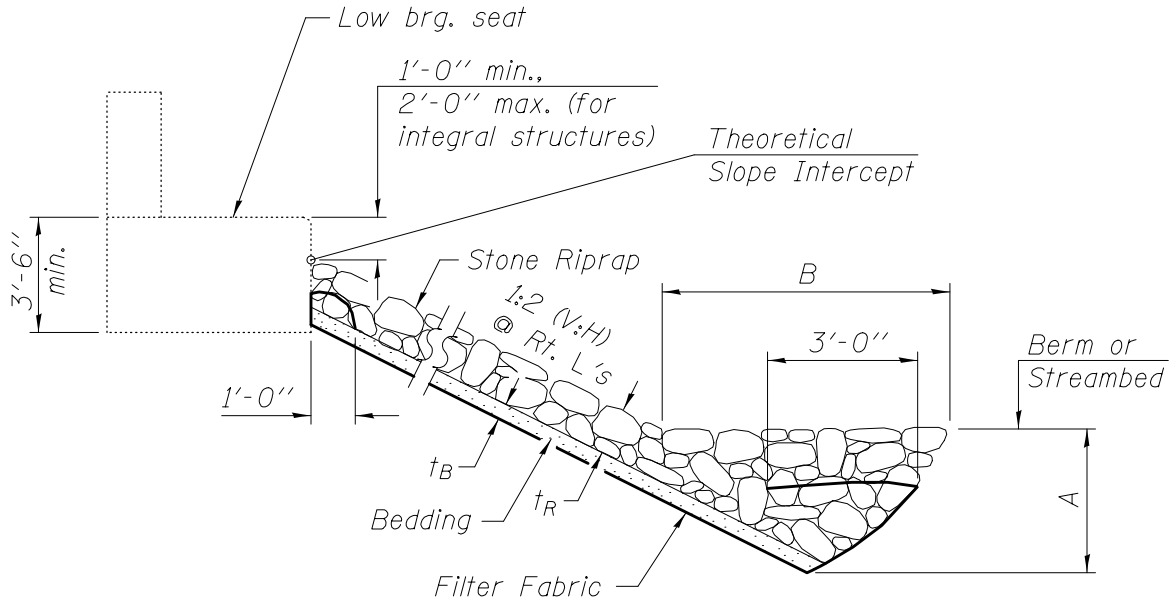

TOE STONE RIPRAP TREATMENT
STREAM CROSSINGS

Figure 19

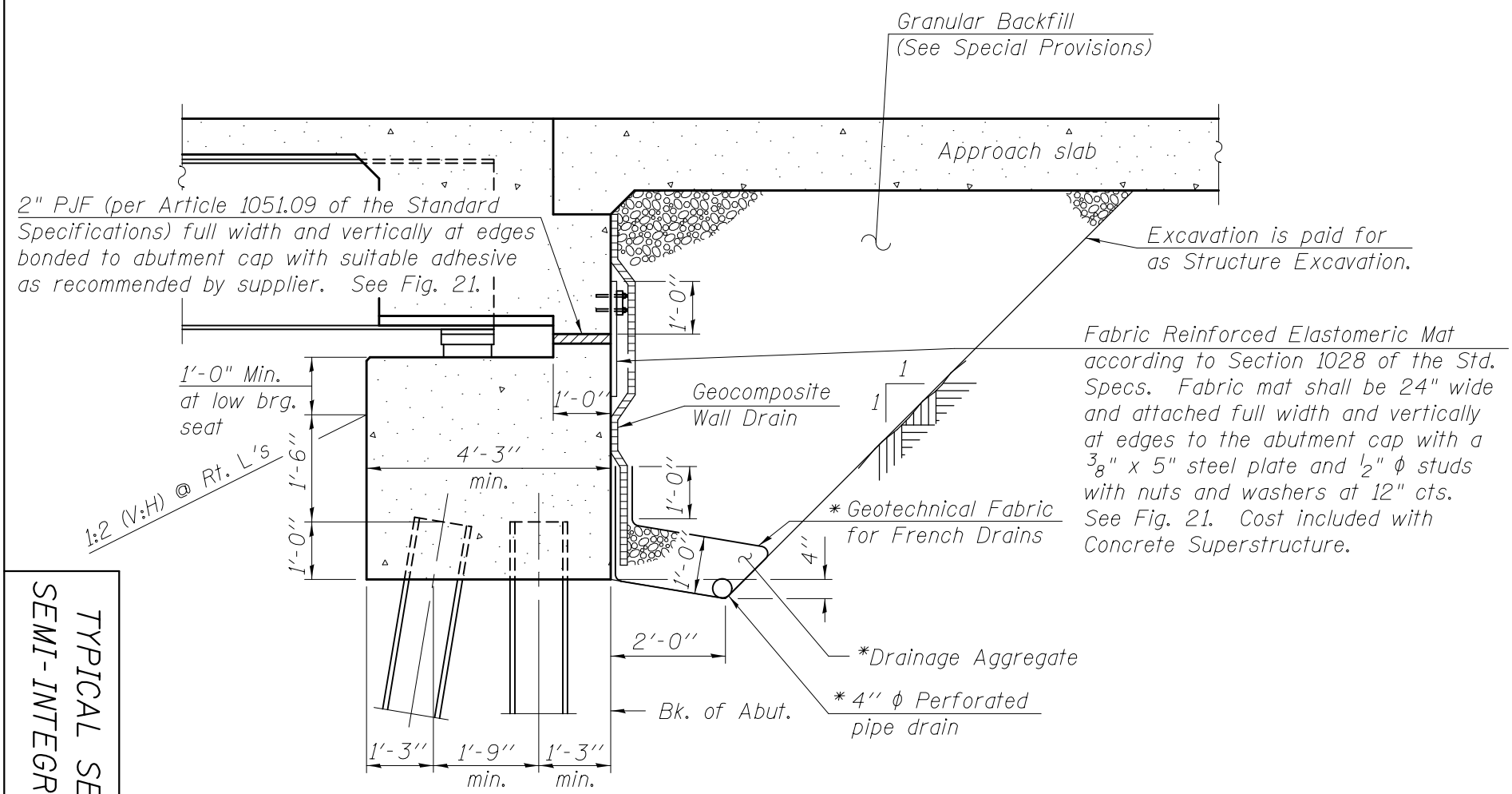

* Included in the cost of Pipe Underdrains for Structures. (See Special Provisions).

All drainage system components shall extend to 2'-0" from the end of each wingwall except an outlet pipe shall extend until intersecting with the side slopes. The pipes shall drain into concrete headwalls. (See Article 601.05 of the Standard Specifications and Highway Standard 601101).

TYPICAL SECTION THRU SEMI-INTEGRAL ABUTMENT

Figure 20

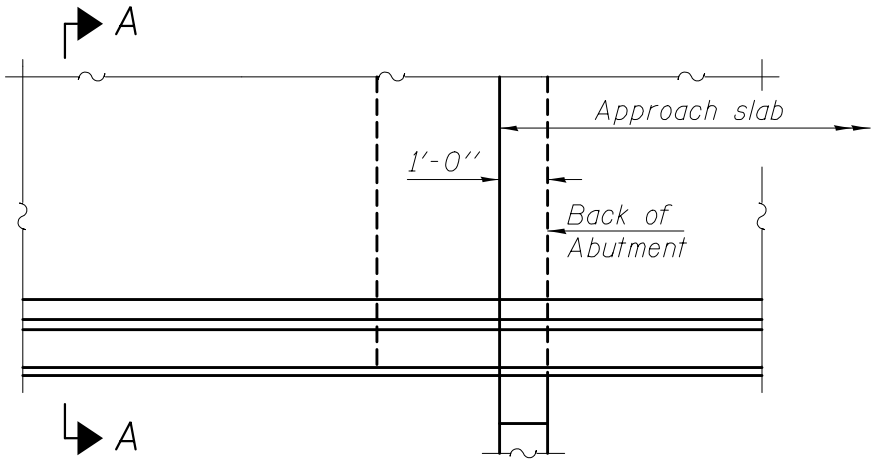

PLAN
(Parapet and approach included)

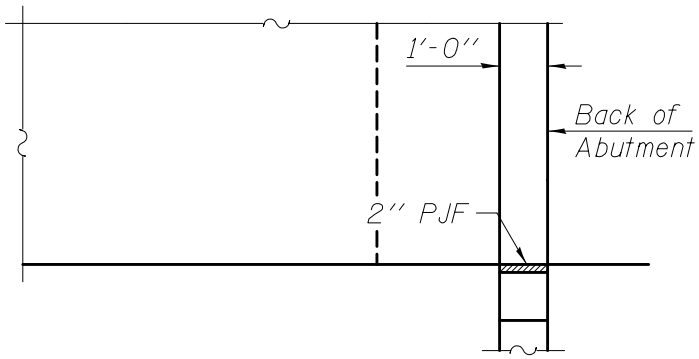

PLAN
(Parapet and approach not included)

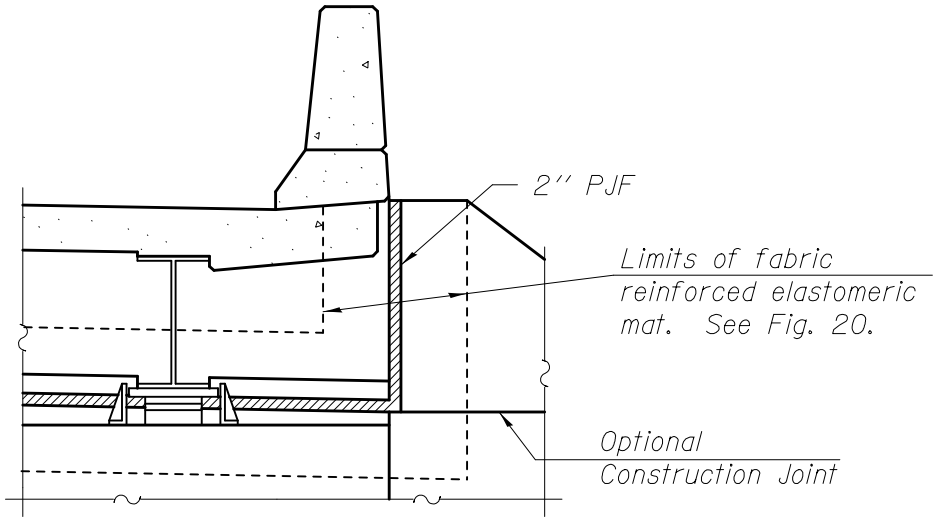

SECTION A-A

SEMI-INTEGRAL
ABUTMENT DETAILS

Figure 21

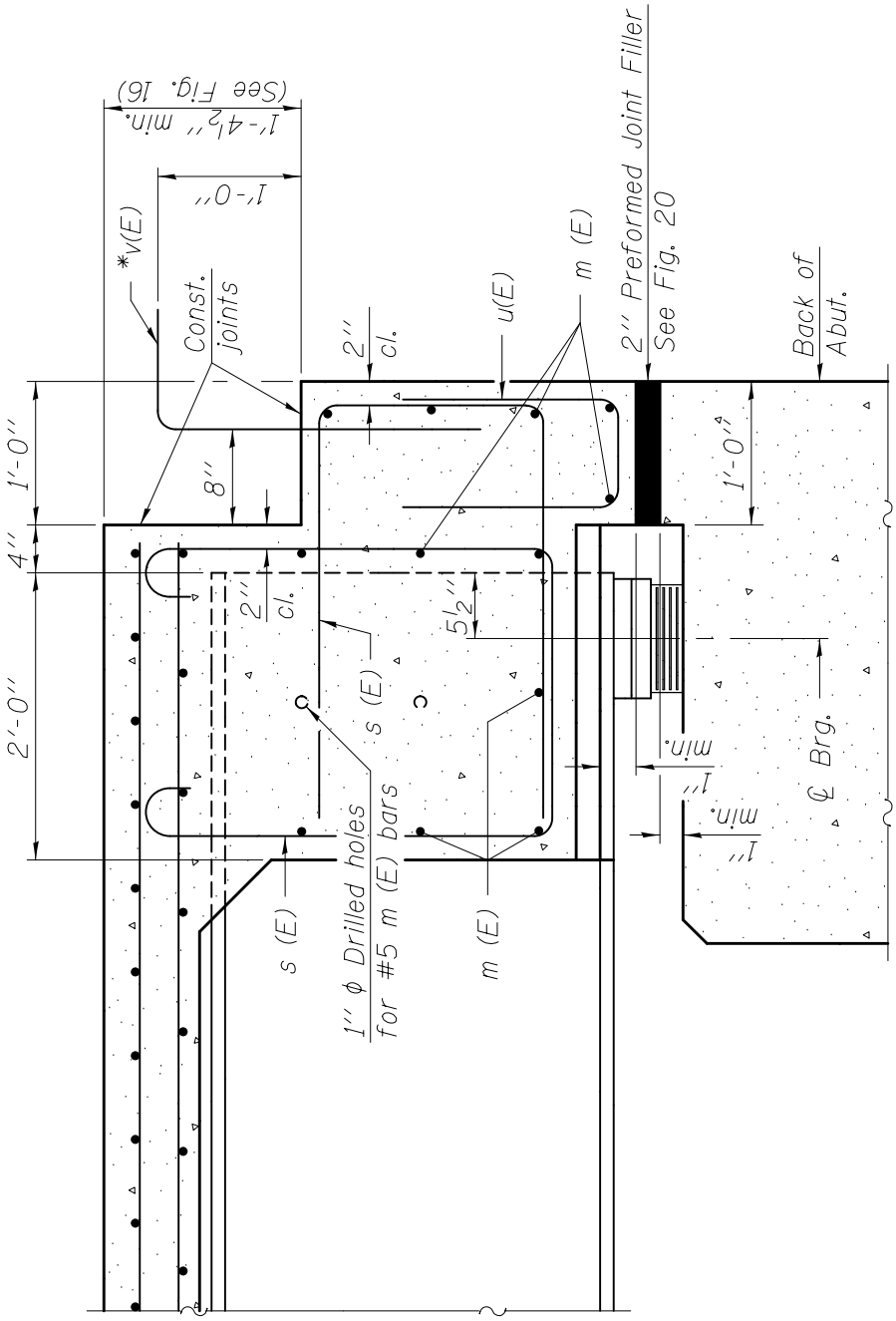

* Omit with precast approach slabs.

SECTION AT ABUTMENT

SEMI-INTEGRAL ABUTMENT FOR
PLATE GIRDERS AND STEEL BEAMS ≥ 24''

Figure 22

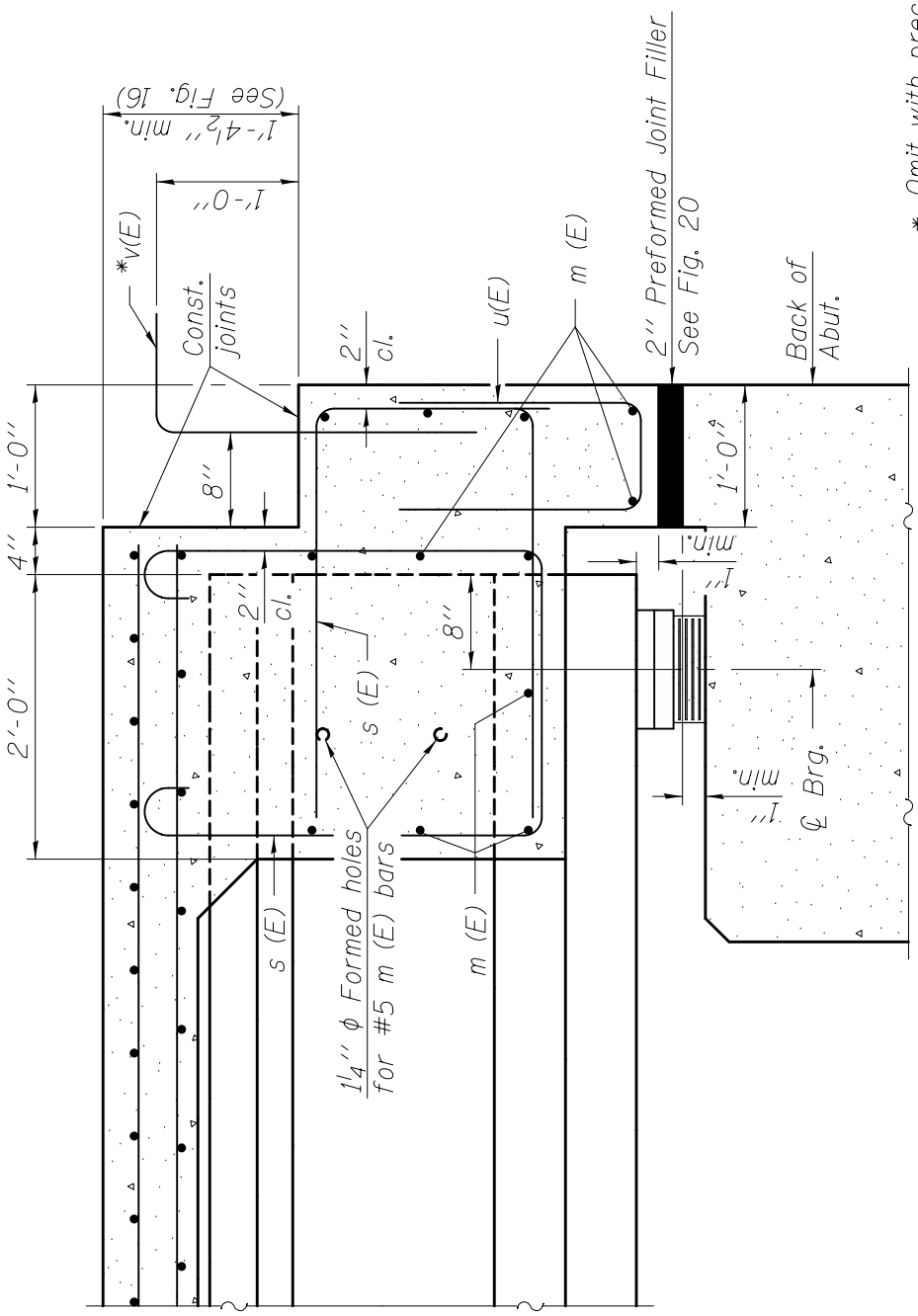

SECTION AT ABUTMENT

SEMI-INTEGRAL ABUTMENT
FOR PPC I-BEAMS

Figure 23

Illinois Department of Transportation

Memorandum

To:	ALL BRIDGE DESIGNERS	12.2
From:	D. Carl Puzey	
Subject:	New Bulb T-Beam Details for Improved Deck Removal	
Date:	April 16, 2012	

The Department's 63 and 72 inch PPC Bulb T-Beams provide an economical structural solution for many bridges. However, the unique 42 inch wide top flange which tapers to a thickness of 3.5 inches at the flange edges, poses a challenge for maintaining the integrity of the beam during future deck removal.

To properly address this challenge, the contractor should recognize that their typical procedure for deck removal may need to be altered in order to protect the beams from damage. Alternative deck removal systems and procedures, which may require more time and effort, have demonstrated that the beam integrity can be maintained during deck removal.

The Department has also investigated the interface shear design requirements between the deck and the beam and has determined that the outside 9 inches on each side of the Bulb T-Beam flange, the thinnest most vulnerable portion, could be debonded and still satisfy the beam design requirements. Accordingly, base sheets PBT-4-63 and PBT-4-72 have been updated to depict this new requirement and a special provision which lists approved bond breaker materials has also been created. The updated base sheets may be found in the Prestressed Bridge Cell Library at the following link: http://www.dot.il.gov/cell/prestressed.pdf and the special provision GBSP 75 may be found at the following link: http://www.dot.il.gov/bridges/gbsp.html.

The tops of the beam flanges designated for a bond breaker will also be troweled smooth by the fabricator as directed in Section 3.4.1 of the "Manual for Fabrication of Precast Prestressed Concrete Products". The bond breaker, however, is applied by the contractor after the beams have been erected and just prior to the installation of the bridge deck reinforcement. The sequence and timing is intended to provide better safety measures due to the slick surface of the bond breaker.

This Bulb T-Beam detail improvement, along with improved contractor deck removal efforts, should better assure owners of successful bridge deck removal without beam damage. This policy shall be implemented on all applicable projects beginning with the August 3, 2012 letting. If there are any questions regarding this policy, please contact Gary Kowalski at (217) 785-2914.

KLR/kktABD12.2bulbTbeams-20120416

Illinois Department of Transportation

Memorandum

To:	ALL BRIDGE DESIGNERS	12.1
From:	D. Carl Puzey	
Subject:	Vehicle Collision Force	
Date:	April 16, 2012	

Article 3.6.5 - "Vehicle Collision Force" of the AASHTO LRFD Bridge Design Specifications was recently updated in the new 2012 (6th edition) version of the code; however, the 2012 Illinois Bridge Manual revisions did not fully address the Department's strategy for dealing with this issue. This memorandum is intended to clarify the Department's position regarding this article of the code and supersedes the provisions of Article 3.9.3.7 of the 2012 Bridge Manual.

The new standard crashwall height on piers adjacent to vehicle traffic shall be 5'-0" above the finished ground line at the pier, regardless of the design load.

All new piers adjacent to interstate traffic and all new piers supporting interstate traffic and adjacent to vehicular traffic shall be considered "critical or essential" for vehicle collision forces. These piers shall be designed to provide structural resistance for a vehicle collision having an equivalent static force of magnitude, angle and height as described in the AASHTO Specifications. All other new piers adjacent to vehicular traffic shall be considered "typical" and shall be evaluated according to the commentary provisions of Article 3.6.5 using a projected ADTT at half the design life of the structure. Piers requiring vehicle collision force design shall be designed to provide structural resistance for the vehicle design force. Other vehicle collision force mitigation options described in the AASHTO Specifications may only be utilized when approved by the Bureau of Bridges and Structures. The Department does permit uplift on footings or tension in piles for this extreme event loading condition but recommends that appropriate anchorage details be provided for these cases.

The vehicle collision force provisions shall not be applicable to MSE walls or existing piers. Piers adjacent to railways shall satisfy the crashwall height and train collision requirements as specified in the AREMA Manual for Railway Engineering.

This policy shall be effective immediately on all applicable projects. If there are any questions regarding this policy please contact Gary Kowalski at (217) 785-2914.

KLR/kktABD12.1vehicularcollisionforce-20120416

Illinois Department of Transportation

Memorandum

To:	ALL BRIDGE DESIGNERS	12.0
From:	D. Carl Puzey	
Subject:	AASHTO LRFD Specifications	
Date:	April 2, 2012	

The American Association of State Highway and Transportation Officials have published the following publication:

2012 Interim Revisions to AASHTO LRFD Bridge Design Specifications, Customary U.S. Units, 6th Edition

Item Code: 26-LRFDUS-6-UL

You can order this, and all AASHTO publications, by calling 1-800-231-3475 or visiting the online bookstore, https://bookstore.transportation.org.

This publication shall be applicable to all LRFD design plans prepared from TS&L plans approved after June 29, 2012.

GMK/kktABD12.0 AASHTO LRFDspecifications-20120402

Illinois Department of Transportation
Memorandum

To:	ALL BRIDGE DESIGNERS	11.3 (REV)
From:	D. Carl Puzey	
Subject:	LRFD Design Requirements for Precast and Cast-In-Place Concrete Box Culverts	
Date:	November 2, 2011 (Revised January 27, 2012)	

The Department is beginning implementation of AASHTO Load and Resistance Factor Design (LRFD) for buried structures, which includes culverts, pipes and three sided structures. This memorandum addresses concrete box culverts.

PRECAST CONCRETE BOX CULVERTS

Effective with the 2012 Standard Specifications for Road and Bridge Construction and beginning with the January 20, 2012 letting, all precast concrete box culverts and precast extensions of existing culverts shall utilize LRFD by applying the standard designs of ASTM C 1577. Precast box configurations and loadings not addressed in ASTM C 1577 may be designed utilizing LRFD with the latest version of the BOXCAR program, provided similar slab and wall thicknesses of the nearest standard geometric configurations from ASTM C 1577 are used. These non-standard precast box culvert sections shall have the design shown on the contract plans, similar to a cast-in-place box, and shall be sealed by an Illinois Licensed Structural Engineer. The following table is a list of standard precast box configurations that may be found in ASTM C 1577. Standard configurations are encouraged for new culvert designs. If the closest standard configuration is too tall for a specific application, consider setting the box invert deeper or utilizing more culvert barrels of a shallower configuration before using a non-standard configuration.

Standard Precast Concrete Box Culvert Configurations (Span x Rise - ft.)				
3 x 2	6 x 3	8 x 4	9 x 9	11 x 6
3 x 3	6 x 4	8 x 5		11 x 8
	6 x 5	8 x 6	10 x 5	11 x 10
4 x 2	6 x 6	8 x 7	10 x 6	11 x 11
4 x 3		8 x 8	10 x 7	
4 x 4	7 x 4		10 x 8	12 x 4
	7 x 5	9 x 5	10 x 9	12 x 6
5 x 3	7 x 6	9 x 6	10 x 10	12 x 8
5 x 4	7 x 7	9 x 7		12 x 10
5 x 5		9 x 8	11 x 4	12 x 12

It is important to note there are a few design limitations associated with ASTM C 1577. First, the design tables are adequate for skews up through 30 degrees and also for larger skews when the design fill is greater than 5 feet. Skews larger than 30 degrees with design fills less than or equal to 5 feet shall be handled with design tables that IDOT will provide through a (BDE) special provision entitled

"CONCRETE BOX CULVERTS WITH SKEWS > 30 DEGREES AND DESIGN FILLS ≤ 5 FEET (BDE)" prior to the January letting. Designs from this special provision or ASTM C 1577 do not require a seal by an Illinois Licensed Structural Engineer. This policy is summarized in the following chart.

Skew*	Design Fill	Specification
≤ 30	All Fills	ASTM C 1577
> 30	> 5 ft	ASTM C 1577
> 30	≤ 5 ft'	IDOT Special Provision

*The skew is the angle between a perpendicular line to the box culvert and the centerline of the roadway.

Second, the design tables of ASTM C 1577 are based on a live load distribution of 1.15 in both directions through design fills ≥ 2 feet. To achieve this distribution, Porous Granular Embankment (PGE) backfill is required for all boxes meeting either of the following two conditions:

- Depth of fill ≥ 2 ft. and ≤ 8 ft.
- Depth of fill ≤ span of largest box in configuration

The limits and quantities of the PGE necessary for the box installation shall be shown and included in the roadway plans.

Design fills less than 2 feet shall satisfy the requirements of AASHTO LRFD Article 4.6.2.10. The Department recommends PGE or a continuation of the roadway sub base up to the 2 feet of fill. Note that for Case 1, parallel to the span, the LLDF shall then be 1.15.

Roadway Plan Presentation

Over the years, many Districts have developed their own unique contract plan details for precast box culverts, some by repeating portions of the AASHTO details and tables and others by developing their own notes, tables and details. This transition from Load Factor Design (LFD) to LRFD design is a good opportunity to unify and promote consistent details throughout the State. Therefore, in lieu of the various past practices, we are recommending the following:

1. Each culvert shall be identified on the plan/profile sheets of roadway plans with the following information:

   ASTM C 1577; Station; Size; Skew; Design Fill

   Fabricators will be instructed in the Bureau of Materials and Physical Research (BMPR) policy memorandum "Quality Control/ Quality Assurance Program for Precast Concrete Products" to identify each precast box culvert section in the same way for easy identification and location in the field. Additionally, the policy memorandum requires fabricators to include their producer mark and the date of manufacture on each precast box culvert section.

2. Each set of applicable roadway plans shall have a Culvert Schedule including the following minimum information. The designer shall determine the design fill heights, and shall note whether PGE backfill is required.

Precast Box Culvert Schedule (ASTM C 1577)					
Station	Size (Span x Height)	Skew*	Design Fill (ft.)		PGE backfill required
			Edge of shldr. (minimum)	Maximum	

*Skews > 30° with design fills ≤ 5 ft. require a special design. See BDE Special Provision "CONCRETE BOX CULVERTS WITH SKEWS > 30 DEGREES AND DESIGN FILLS ≤ 5 FEET (BDE)". The skew is the angle between a perpendicular line to the box culvert and the centerline of the roadway.

3. The roadway plans shall clearly illustrate the intended limits, pay item and quantity of the PGE necessary for the box installation.

CAST-IN-PLACE (CIP) BOX CULVERTS

In order to allow some time for plan preparation, all CIP concrete box culverts and CIP extensions of existing culverts, beginning with the June 15, 2012 letting and beyond shall utilize LRFD according to the latest version and interims of the AASHTO LRFD Bridge Design Specifications. The Department anticipates issuing Standardized Design Tables of single span box culverts for the Culvert Manual. Until these tables become available, all CIP simple span box culverts, on the June 15, 2012 letting and beyond, will require a design sealed by an Illinois Licensed Structural Engineer. All multi-span CIP boxes will continue to require a design sealed by an Illinois Licensed Structural Engineer similar to our current policy.

Design Preferences

The same live load distribution of 1.15, as previously discussed for precast concrete box culverts, shall also be used for CIP boxes. As such, PGE will also be required for the same ranges of design fill.

CIP concrete box culverts shall be designed for the perpendicular span between the culvert walls. The main flexure reinforcement is therefore also placed at right angles to the wall. On skewed structures, the skewed areas near staged construction lines or end sections shall preferably be addressed with an edge beam design satisfying Article 4.6.2.1.4 of the AASHTO LRFD Bridge Design Specifications. However, there are circumstances where it may be more advantageous to place the flexure reinforcement along the skew rather than perpendicular to the walls. Examples may be culverts with short lengths, staged construction and large skew or shallow fills where an edge beam design requiring more slab depth may interfere with the roadway sub base. In these cases, the perpendicular span shall be used to design the slab thickness and the steel area.

- The steel area shall then be increased by the multiplication of $\sec^2\theta$ and the resulting area of steel placed along the skew. The skew, θ, is defined as the angle between a perpendicular line to the box culvert and the centerline of the roadway. Additionally, Article 5.5.4.2.1 of the AASHTO LRFD Bridge Design Specifications shall be satisfied such that the slab remains "tension controlled".

IMPLEMENTATION

In summary, all precast concrete box culverts and precast extensions of existing culverts, beginning with the January 20, 2012 letting, shall utilize LRFD by applying the standard designs of ASTM C 1577 and all CIP concrete box culverts and CIP extensions of existing culverts on the June 15, 2012 letting and beyond shall utilize LRFD according to the latest version and interims of the AASHTO LRFD Bridge Design Specifications.

Due to these time frames, it is possible to have a few scenarios that will require additional action. First, a LFD designed CIP box culvert may appear on some of the early 2012 lettings. If there is not a note stating otherwise on the plans, the contractor may still have the option to substitute a precast box culvert as permitted by Article 540.04 of the Standard Specifications. In these cases, a precast box culvert built according to ASTM C 1577 may be substituted provided the design requirements previously described are satisfied. To ensure all potential additional costs, such as PGE, are covered by the contract for this scenario, a BDE special provision of either "CONCRETE BOX CULVERTS WITH SKEWS ≤ 30 DEGREES REGARDLESS OF DESIGN FILL AND SKEWS > 30 DEGREES WITH DESIGN FILLS > 5 FEET (BDE)" or "CONCRETE BOX CULVERTS WITH SKEWS > 30 DEGREES AND DESIGN FILLS ≤ 5 FEET (BDE)" shall be inserted into each applicable contract document.

Second, the contract plans may originally have detailed a precast concrete box based on the old AASHTO M 259 or M 273 (LFD design) but the equivalent standard ASTM C 1577 (LRFD designed) precast concrete box culvert may require PGE, depending on the design fill. To ensure all potential additional costs, such as PGE, are covered by the contract for this scenario, the appropriate BDE special provision as mentioned in the previous paragraph, shall be inserted into each applicable contract document.

The Bureau of Bridges and Structures will coordinate with the Bureau of Design and Environment to insure contracts with culverts, let before June 15, 2012, have the appropriate special provisions inserted. If there are any questions regarding these policies please contact Gary Kowalski at (217) 785-2914.

KLR/kktABD11.3LRFDrevised-20111102

Illinois Department of Transportation

To:	ALL BRIDGE DESIGNERS	10.2
From:	Ralph E. Anderson	Ralph E. Anderson
Subject:	Load Rating Guidance for Bolted and Riveted Gusset Plates in Steel Truss Bridges	
Date:	May 11, 2010	

In response to the collapse of the I-35W Interstate highway bridge over the Mississippi River in Minneapolis on August 1, 2007, the Federal Highway Administration (FHWA) issued Technical Advisory T5140.29. The technical advisory requires load capacity checks of gusset plates as part of load ratings of non-load-path-redundant steel truss bridges.

To assist with determining gusset plate capacities, the FHWA developed Publication No. FHWA-IF-09-014 titled "Load Rating Guidance and Examples for Bolted and Riveted Gusset Plates in Truss Bridges" dated February 2009. The FHWA publication is available from the FHWA Research and Technology Reports Center by calling 814-239-1160 or by e-mail to report.center@dot.gov. To further assist with determination of gusset plate capacities and use of the FHWA document, the Department has developed the attached guidelines.

The Department is currently in the process of load rating state maintained steel trusses with gusset plates. Department staff and consultants assigned the task of load rating trusses with gusset plates shall use these documents as guidance for determining the capacities of gusset plates.

Further guidance regarding load rating implementation for local agency maintained trusses with gusset plates will be forthcoming in the near future.

Questions regarding these documents may be directed to Tim Armbrecht, Structural Ratings and Permits Unit Chief, at 217-782-6266.

attachment

DCP/kktABDgussetplates-20100511

Guidelines for Rating Gusset Plates by the Load Factor Method

Introduction

In FHWA Technical Advisory T5140.29, issued January 15, 2008, the National Transportation Safety Board recommends that bridge owners check the capacity of gusset plates on non-load-path-redundant steel truss bridges as part of the load rating calculations.

FHWA Resources

The FHWA has published a document for rating gusset plates titled *"Load Rating Guidance and Examples for Bolted and Riveted Gusset Plates in Truss Bridges"* (Publication No. FHWA-IF-09-014, dated February 2009), hereinafter called the 2009 FHWA Guidance.

The FHWA is also involved with NCHRP Project 12-84, which is currently underway and is due to finish at the end of 2010. This project is researching methods for designing and rating gusset plates. Depending on the results of this project, the gusset plate rating procedures may eventually be revised.

IDOT Bureau of Bridges and Structures (BBS) Guidelines

The BBS has developed the guidelines below for rating gusset plates for Illinois. These recommendations shall take precedence over recommendations in the 2009 FHWA Guidance.

Live Load Forces

The BBS recommends determining gusset plate load ratings based on the maximum envelope live load forces. The results should be used as a filter to determine any rating factors that are below 1.0. If any gusset plate load rating factors are determined to be below 1.0, load ratings should be re-calculated based on concurrent forces in the members, which can be determined using the Virtis software.

Effective Length Factor, K

For the effective length factor, K, the BBS recommends K = 1.2 be used for all typical cases when evaluating the column model for gusset plates. For these cases, raters do not need to determine whether lateral sway is possible or what the end conditions are for each gusset plate. FHWA has indicated there could be "unique connections (i.e., unsymmetrical, large unbraced length, etc.)" where a different K value may be more appropriate. If a rater uses a K factor other than 1.2, it should be brought to the attention of the owner.

Shear Reduction Factor, Ω

According to the 2009 FHWA Guidance, the options for Ω are either 1.00 or 0.74. FHWA has indicated "Until current research demonstrates the proper value of Omega, we recommend using a value of 0.74." Part of the NCHRP 12-84 project will be to research whether Ω should be 0.74 or some other value.

For the Shear Reduction Factor, Ω, the BBS recommends Ω = 0.74 be used at this time.

Slip Critical Considerations

The 2009 FHWA Guidance does not consider slip. The BBS concurs that raters need not determine a rating based on slip resistance.

Chord Splices

Sometimes there are chord splice plates at a gusset location. These splice plates may carry part of the load along with the gusset plates. FHWA has pointed out that a short splice plate may not carry much load at a given section. The amount of load that a splice plate may carry depends on the splice plate capacity that has developed on each side of the section which is being analyzed.

At a given section, the BBS recommends that raters distribute loads proportionally between the gusset plates and the splice plates according to their respective areas and while considering the developed capacity of the splice plates. Recorded corrosion shall be considered in proportioning the loads. Please see the item below on Section Loss.

Load Distribution between Gusset Plates

There is typically a gusset plate on each side of a chord member – an inside gusset plate and an outside gusset plate. Sometimes there are multiple gusset plates on each side of a chord member. Generally, half the loads shall be distributed to the inside gusset plate(s) and half to the outside gusset plate(s). For gusset plates with resulting substandard load ratings, load redistribution between inside and outside gusset plates at a given node, based on remaining thickness of each plate, may be acceptable.

At this time, the BBS recommends a maximum redistribution of 30% of the force carried by the gusset plate(s) on one side of the chord member, to the gusset plate(s) on the other side of the chord member. Under the original assumption of the gusset plate(s) on one side carrying 50% of the load, this maximum redistribution would result in the gusset plate(s) on one side carrying 65% of the total load and the gusset plate(s) on the other side carrying 35% of the total load. If this load redistribution technique is utilized, it should be brought to the attention of the owner.

Please also see the section below on Section Loss.

Capacity Reduction Factor

The 2009 FHWA Guidance applies a 10% reduction in capacity (for Load Factor ratings) based on the following statement: "Since the failure of gusset plates in non-redundant structures may result in the collapse of the bridge, the capacity is therefore reduced by 10% to increase the margin of safety."

For Illinois structures, the BBS does not believe it is necessary to use a capacity reduction factor to increase the margin of safety for non-redundant structures. However, a capacity reduction factor approach should be used to account for section loss due to corrosion. Please see the item below on Section Loss.

Section Loss

The 2009 FHWA Guidance does not provide direction on how to account for section loss due to corrosion. Research is underway by NCHRP 12-84 to determine appropriate methods of accounting for section loss.

For Illinois structures, raters may utilize a capacity reduction factor approach (discussed above) to account for section loss. If there is no recorded corrosion of the gusset plates, the splice plates or the fasteners, raters need not consider section loss. If there is recorded corrosion of the gusset plates, splice plates and/or fasteners, raters should reduce the plate thicknesses and the fastener areas to account for the greater of:

- The actual section loss based on the detailed measurements (from the inspection records).
- An assumed section loss of 10%.

This decrease in material area acts as a capacity reduction factor.

Illinois Department of Transportation

Memorandum

To:	ALL BRIDGE DESIGNERS	10.1
From:	Ralph E. Anderson	Ralph E. Anderson
Subject:	Bridge Painting Policy	
Date:	April 27, 2010	

This memorandum is to inform you of the latest cleaning and painting policies and the special provisions related to this work. It also gives direction in the creation of paint only contracts, cost analyses for different types of cleaning and painting, and general paint information and terminology. This memo supersedes the previously issued Bridge Memoranda 02.1 and 04.2.

Bridge painting serves two purposes; aesthetic treatment and corrosion protection. In order to choose a bridge paint system that is functional, durable, and aesthetically pleasing, the following information must be determined:

- Cleaning and Painting Strategy
- Required type of cleaning
- Appropriate paint system
- Desired color

These decisions should be coordinated with the District Bridge Maintenance Engineer and/or the District Paint Technician. Once these aspects have been determined, a cost analysis can be calculated, the appropriate pay items and notes can be chosen, and plans can be generated.

For new steel structures, the portions of this memorandum related to the areas of the bridge to be painted and required type of cleaning are not applicable.

1) **Determining the cleaning and painting strategy for existing structures.** There are three strategies that can be employed for cleaning and painting existing structural steel. The structure can be zone painted, overcoated, or the entire coating can be completely removed and replaced.

   a) Zone painting typically has a higher square foot cost because of fixed mobilization costs and low productivity, but a low total project cost because the total square footage cleaned and painted is usually small. Zone cleaning and painting only addresses specific problem areas of the bridge, removing the coating to bare metal in those areas, while leaving the rest of the bridge

untouched. It is typically used to address corrosion problems under joints in the deck and/or the aesthetics of the fascia girders. The Districts typically use this zone strategy to stretch their painting budget to cover as many bridges with minor problems as they can.

The following are some general rules for zone cleaning and painting:

- Areas near deck joints will typically be painted five feet on each side of the joint. Exceptions may be made if there is evidence of corrosion outside of this area or if the bridge has a very large (greater than 40 degree) skew.

- Structures over water and railroads will typically be cleaned and painted only at the deck joints and the fascias. The underside should not be painted unless justification is submitted to the Bureau of Bridges and Structures. Typical justification for painting the underside includes excessive corrosion or widespread breakdown of the existing coating on the interior girder surfaces, etc.

- Zone painting of trusses, arches, bascules, or other complex structures should be evaluated on a case by case basis to determine the best painting strategy. Typically, as a minimum, the splash zone (bottom cord to 12 ft above the deck) should be blast cleaned, the remainder power tool cleaned, and overcoated if in good enough condition to support an overcoating system. In addition, trusses are normally painted in combination with a rehabilitation contract. The Bureau of Bridges and Structures should be consulted for concurrence on the scope of work.

b) Overcoating typically will have a lower unit cost than zone painting because the mobilization costs are amortized across the entire surface, and less effort per square foot over the entire structure is required for overcoating, compared with the effort required to remove the coating to bare metal. This strategy basically addresses the rest of the structural steel not covered by the zone strategy and may be utilized when the existing coating is in relatively good condition. See the attached Overcoating Guide for further assistance in evaluating the existing coating. The Districts have not been using this strategy on structures with lead based paint because of the overall age and marginal to poor condition of that paint system on our current bridge inventory. In addition, vinyl coated structures have been found to be difficult to overcoat because of the nature of the vinyl paint system. It is anticipated that our acrylic coated inventories, and when the time comes, our zinc/epoxy/urethane and moisture cured urethane inventories, will be excellent candidates for overcoating.

c) Complete or full removal and replacement of the existing coating is the preferred strategy for dealing with lead based painted structures. However, this strategy also has the highest per square foot cost because of the containment and

cleaning effort required. A bridge should be fully cleaned and painted when the extent of the damage to the paint system is widespread and budget constraints are not an issue.

For new structural steel on rehabilitation contracts, painting may be placed on a separate contract if the following criteria are met:

- Existing structural steel requires repainting, and
- There is little or no new steel being added, or
- There is a major amount of new structural steel added to the existing, but the steel is not subjected to salt spray from the below (i.e., bridges over railroads and streams). A major amount of new structural steel is defined as at least one entire new beam line.

2) **Cleaning method requirements.** Illinois commonly uses three types of cleaning. These cleaning types are defined by the Society for Protective Coatings (SSPC) and are as follows: Power Tool Cleaning (SSPC SP-3 Mod) with which IDOT also includes pressure washing, Near White Blast Cleaning (SSPC SP-10), and Commercial Grade Power Tool Cleaning (SSPC SP-15).

a) Power Tool Cleaning (SSPC SP-3 Modified) is typically used in conjunction with overcoating. It involves removing loose paint, loose rust, loose mill scale, etc. from the surface, but leaving the tight paint intact. Illinois refers to this type of cleaning as “modified SP3” because the entire surface to be painted must be worked by the power tool and then tested to insure all loose materials have been removed (rather than only cleaning the visibly rusted areas). In conjunction with this Modified SP3 cleaning, the entire surface to be painted must also be pressure washed to remove chlorides and other soluble contaminants. It is the least removal-intensive of the three systems and requires the simplest of containments of the three systems. However, it also carries the highest risk of future delamination of the paint system, because the old coating is allowed to remain on the surface. When determining whether overcoating is appropriate, the coating on the bridge should be tested for adhesion using ASTM D3369, Method A. The results of this test will give the risk of delamination of the new paint system. See the attached Overcoating Guide for more guidance in analyzing the results of this test. Typically overcoating will only be economical for bridges where the total amount of corrosion does not exceed 15% of the steel surface area of the bridge. The total amount of corrosion can be found in the latest NBI inspection report. It is not recommended to overcoat existing lead-based or vinyl topcoat systems.

b) Near White Blast Cleaning (SSPC SP-10) involves the use of an abrasive blast to remove all existing paint, rust and mill scale from the area to be cleaned. It requires a more complex containment system that includes dust collection, but gives the least chance of delamination of the new paint system since it is being applied to

clean, bare steel. Near White Blast Cleaning should be used for zone painting near joints, for complete coating removal and replacement, and may be specified in lieu of SSPC SP-15 for fascias when desired.

c) Commercial Grade Power Tool Cleaning (SSPC SP-15) involves the use of power tools to remove all existing paint, rust and mill scale from the area to be cleaned. It typically involves the use of vacuum-shrouded power tools and requires a containment system similar to that for SSPC SP-3. This system is primarily used when cleaning fascias over traffic or spans over active railroads where the rapid removal of the containment system may be required.

These three cleaning methods may be used in conjunction with each other on projects. For example, in a grade separation with bridge joints, the areas under the bridge joints will be cleaned using Near White Blast Cleaning, the fascia beams will be cleaned using Commercial Grade Power Tool Cleaning, and the rest of the bridge will be cleaned using Modified Power Tool Cleaning. The standard general paint notes found later in this memorandum give preferred configurations of cleaning methods.

3) Determining the appropriate paint system. The naming convention used for the paint systems below is primer/intermediate coat/top coat. For your convenience, a Paint System Selection Flow Chart has been attached to assist the designer in selecting the appropriate paint system.

For painting new steel, there are two approved systems that may be used:

- Inorganic Zinc/Acrylic/Acrylic (IZ/AC/AC)
- Organic Zinc/Epoxy/Urethane (OZ/E/U)

For painting existing steel cleaned to bare metal there are three approved systems:

- Epoxy Mastic/Epoxy Mastic/Acrylic (EM/EM/AC)
- Organic Zinc/Epoxy/Urethane (OZ/E/U)
- Moisture Cured Urethane (MCU)

For overcoating existing coated steel there are two approved paint systems:

- Penetrating Sealer/Epoxy Mastic/Urethane (PS/EM/U).
- Penetrating Sealer/Epoxy Mastic/ Acrylic (PS/EM/AC).

Each of these systems has its advantages and disadvantages. Since these paint systems are tested and approved as a system, intermixing of materials from one system with another is not permitted. Also, only the specific products that have been tested and approved by the Bureau of Materials and Physical Research can be used.

The paint systems for new steel are a function of the primer used. The inorganic zinc (IZ) is the preferred primer for new structures. The Department has had over 20 years of experience with this primer. When compared to the organic zinc (OZ), it provides the best corrosion protection, but IZ requires exposure to humidity to complete its curing and thus is problematic when a full shop applied system is desired. The OZ primer has a quicker recoat window and cures independent of the ambient humidity. Therefore, for new steel, the IZ primer should be used where full shop applied painting is not required – i.e., used in all cases when only the primer is applied in the shop. The OZ primer should be used where a full shop applied system is desired.

Several issues combined resulted in the Department choosing the more tolerant OZ over IZ for priming of existing steel. Basically the IZ primer is very sensitive to substrate cleanliness and this cleanliness can be difficult to control in the field. In addition, the IZ is more difficult to apply, especially under field conditions. The OZ primer is now preferred for priming existing SP10 cleaned steel.

The Epoxy Mastic (EM) primer is the oldest current primer used for painting existing steel. This primer is the most tolerant of surface preparation, but serves only as a barrier coat and offers little undercutting corrosion protection once the coating is compromised. When the steel is blast cleaned to SP10, this system should only be used when major new steel with an acrylic top coat is being added to an existing bridge. In these cases it is important to preserve continuity of the top coat between the new and existing steel. In all other cases where the steel is blast cleaned to SP10, OZ primer should be used.

The Moisture Cured Urethane System (MCU) was developed for painting structures primarily where the weather conditions are expected to be very humid and/or the temperatures are cool. This system should only be used on existing SP10 cleaned steel where night time painting is dictated to minimize disruptions to traffic and during times of the year when high humidity is expected and/or the temperatures are cool.

There are two paint systems for overcoating existing painted structural steel: the Penetrating Sealer/Epoxy Mastic/Urethane System (PS/EM/U), and the Penetrating Sealer/Epoxy Mastic/Acrylic (PS/EM/AC) system. Both are designed to go over pressure washed and power tool cleaned surfaces. The only difference is the top coat. The two different topcoat choices exist so that continuity between the new and existing steel may be preserved. (i.e.- if new steel is being added to the existing steel, the top coat of the overcoating system used should match that of the new steel)

4) **Determining Bridge Color.** IDOT uses four standard colors for bridge fascias. They are:

- Interstate Green (Munsell No 7.5G 4/8)
- Reddish Brown (Munsell No 2.5YR 3/4)
- Blue (Munsell No 10B 3/6)
- Gray (Munsell No 5B 7/1)

For ease of inspection, all interior surfaces shall be Gray.

5) **Estimating Cost.** The following costs may be used in estimating. The square foot cost given is for the combination of containment, disposal, and the paint system. The average cost is based on a range which varies depending on the type, size, location, degree of difficulty, etc. of the project.

a) Power Tool Cleaning per Modified SSPC-SP3 and paint with PS/EM/U or PS/EM/AC estimated cost range: $4.00 - $7.00 per sq. ft. This cost is multiplied by the entire surface painted, not just the areas spot cleaned.

b) Near White Blast Cleaning per SSPC-SP10 and paint with OZ/E/U, EM/EM/AC, or MCU Systems estimated cost range: $7.00 - $12.00 per sq. ft. This cost is multiplied by the entire surface painted. For zone cleaning and painting or for complex bridges, the high end of the cost range would typically be used.

c) Commercial Power Tool Cleaning per SSPC SP-15 and paint with OZ/E/U, EM/EM/AC, or MCU Systems estimated cost range: $5.00 - $8.00 per sq. ft. This cost is multiplied by the entire surface painted, not just the areas cleaned to bare metal.

Large surface areas may justify the use of the lower unit costs.

On rehabilitation projects where the structural steel is being evaluated for replacement, the painting costs should be included in the analysis between complete superstructure removal vs. reusing some or all of the existing structural steel.

6) **Choosing the appropriate pay items and Special Provisions.** There are three main pay items used when painting an existing bridge: one for cleaning and painting, one for containment and disposal of residues, and one for a warranty (usually only for complete removal and repainting projects and only at the request of the district). Normally, cleaning and painting new steel or contact surfaces between

new and existing steel is included with the furnishing and erecting pay items and not paid for separately. Each item of work has a Guide Bridge Special Provision as follows:

- GBSP 21 for Cleaning and Painting Contact Surfaces Areas of Existing Steel Structures
- GBSP 22 for Cleaning and Painting New Metal Structures
- GBSP 25 for Cleaning and Painting Existing Steel Structures
- GBSP 26 for Containment and Disposal of Lead Paint Cleaning Residues
- GBSP 60 for Containment and Disposal of Non-Lead Paint Cleaning Residues

The special provision for paint warranties is available upon request

As per Section 506 of the Standard Specifications, painting of new structural steel is included in the pay item Furnishing and Erecting Structural Steel. If the contract is divided into separate fabrication and erection contracts, payment for the painting of the structural steel is as specified by Article 506.05(c). Painting of existing structural steel is paid for as specified by GBSP 25. Dual structures should have two pay items one for each bridge.

If the existing structure paint system contains lead, the pay item Containment and Disposal of Lead Paint Cleaning Residues at the location specified shall be used. If the existing structure does not contain lead, the pay item Containment and Disposal of Non-Lead Paint Cleaning Residues at the location specified shall be used. Whether or not the existing structure contains lead can be determined from structure reports (PONTIS). Multiple bridges may be covered by one containment pay item with no individual location specified.

A 2 year painting warranty may be used on projects for cleaning and painting of existing structures (not new structures), with or without lead paint. The warranty may only be used when full removal and replacement of the existing coating is specified. Use of this warranty requires the pay item Bridge Cleaning and Painting Warranty at the location specified. There should be only one bridge per pay item.

7) General Notes. The following general notes shall be placed on plans for contracts involving bridge painting:

Painting existing steel of highway grade separation structures including over coating underside (interior surfaces):

“Cleaning and painting of the existing structural steel shall be as specified in the special provision for “Cleaning and Painting Existing Steel Structures”. All beams, bearings and other structural steel within 5 ft (measured along the beam) of either

side of deck joints shall be cleaned per Near White Blast Cleaning – SSPC-SP10. The exterior surfaces and bottom of the bottom flange of the fascia beams shall be cleaned per Commercial Grade Power Tool Cleaning – SSPC-SP15. All remaining structural steel shall be cleaned per Power Tool Cleaning – Modified SSPC-SP3.

The designated areas cleaned per Near White Blast Cleaning and per Commercial Grade Power Tool Cleaning shall be painted according to the requirements of Paint System 1 - OZ/E/U. The designated areas cleaned per Power Tool Cleaning – Modified SSPC-SP3 shall be painted according to the requirements of Paint System 2 - PS/EM/U. The color of the final finish coat for all interior steel surfaces shall be Gray, Munsell No 5B 7/1. The color of the final finish coat for the exterior and bottom flange of the fascia beams shall be (**)."

Painting existing steel of railroad and stream crossings structures or grade separations when underside (interior surfaces) away from the joints are not to be painted:

"Cleaning and painting of the existing structural steel shall be as specified in the special provision for "Cleaning and Painting Existing Steel Structures". All beams, bearings and other structural steel within 5 ft (measured along the beam) of either side of deck joints shall be cleaned per Near White Blast Cleaning – SSPC-SP10. The exterior surfaces and bottom of the bottom flange of the fascia beams shall be cleaned per Commercial Grade Power Tool Cleaning – SSPC-SP15.

The designated areas cleaned per Near White Blast Cleaning and per Commercial Grade Power Tool Cleaning shall be painted according to the requirements of Paint System 1 - OZ/E/U. The color of the final finish coat for all interior steel surfaces shall be Gray, Munsell No 5B 7/1. The color of the final finish coat for the exterior and bottom flange of the fascia beams shall be (**)."

Painting of existing steel when entire structure will be blast cleaned:

"Cleaning and painting of the existing structural steel shall be as specified in the special provision for "Cleaning and Painting Existing Steel Structures". All existing steel shall be cleaned per Near White Blast Cleaning – SSPC-SP10. All existing steel shall be painted according to the requirements of Paint System 1 - OZ/E/U. The color of the final finish coat for all interior steel surfaces shall be Gray, Munsell No 5B 7/1. The color of the final finish coat for the exterior and bottom flange of the fascia beams shall be (**)."

Note to designers regarding paint systems: Paint System 3 – EM/EM/AC may be substituted for Paint System 1 and, Paint System 4 – PS/EM/AC may be substituted for Paint System 2. Do not mix the Acrylic and Urethane systems on the same structure. When inorganic zinc primed steel exists in substantial quantity

use Paint System 3 and 4 respectively for the entire structure. Paint Systems 5 and 6 – MCU may be specified when night time painting is required or when late season painting is anticipated.

On large complex projects (spans over 200 ft, trusses, etc.) where the containment will be supported by the bridge, add this additional note:

"The Contractor shall submit calculations and details demonstrating the structural integrity of the bridge is maintained under the additional imposed loads of the containment system. See special provisions."

On bridges where sensitive receptors are within the greater of 1000 feet or 5 X bridge height, add this note:

"A minimum of (see note below) air monitor(s) will be required to monitor abrasive blasting operations at this site. See special provision for "Containment and Disposal of Lead Paint Cleaning Residues."

Note to designers: (between 1 and 4 monitors may be required between the bridge and the sensitive receptors based on the proximity and uniqueness of the sensitive receptors around the bridge. Sensitive receptors are defined as schools, homes, businesses, livestock, etc. For example, if at one end of the bridge there are two homes, one 500 ft away, one 900 ft away, and one school 700 ft away from the bridge, two monitors would be required, one at the home in the direction of the prevailing wind and one at the school. Please note that vehicular traffic is considered transient and not exposed for a long enough period to be considered a sensitive receptor.

On non-lead, Near White Blast Cleaning projects, add this note:

"Containment of cleaning residue is required to control nuisance dust. See special provisions."

Painting new steel (shop prime/field finish) as part of F&E structural steel:

"The Inorganic Zinc Rich Primer / Acrylic / Acrylic Paint System shall be used for shop and field painting of new structural steel except where otherwise noted. The color of the final finish coat for all interior steel surfaces shall be gray, Munsell No 5B 7/1. The color of the final finish coat for the exterior and bottom flange of the fascia beams shall be (**). See Special Provision for "Cleaning and Painting New Metal Structures."

Painting new steel (entire system in the shop) as part of F&E structural steel:

"The Organic Zinc Rich Primer/Epoxy/Urethane paint system shall be used for painting of new structural steel except where otherwise noted. The entire system shall be shop applied, with the exception that the exterior surfaces and

bottom of the bottom flange of the fascia beams, masked off connection surfaces, and field installed fasteners, all of which shall be touched up and finish coated in the field. The color of the final finish coat for all interior steel surfaces shall be gray, Munsell No. 5B 7/1. The color of the final finish coat for the exterior and bottom flange of the fascia beams shall be (**). See Special Provision for "Cleaning and Painting New Metal Structures".

Repair painting/adjacent areas to new steel (only used if no other cleaning and painting is specified:

"Existing structural steel shall only be cleaned and painted as required by the Special Provision for "Cleaning and Painting Contact Surface Areas of Existing Steel Structures."

Painting new steel, on concrete structures, or where some new steel is being added to a primarily existing steel bridge:

"All new structural steel shall be shop painted with an inorganic zinc rich primer per AASHTO M 300, Type1."

Painting steel to be delayed to a separate paint contract:

"Field painting of structural steel shall be done under a separate painting contract."

*****Colors for fascias:***

- Interstate Green, Munsell No 7.5G 4/8
- Reddish Brown, Munsell No 2.5YR 3/4
- Blue, Munsell No 10B 3/6
- Gray, Munsell No 5B 7/1

8) Plan Details. For contracts containing cleaning and painting of existing steel, all details of the steel to be painted should be shown on the plans. This includes a framing plan, beam details, diaphragm details, bearing details, and anything else necessary for the contractor to be able to accurately determine a bid. A General Plan and Elevation of the structure to be painted is also helpful, as it gives the contractor insight as to the conditions he may be working around.

9) Various Contract Requirements. The containment strategies can be subdivided for existing structures into lead and non-lead conditions. Both strategies are designed to protect the environment, public, and the workers from the hazards of paint removal.

a) The existing coating contains lead. By specification, Class 1A containment is required. By specification, if the structure is within the greater of 1000 feet or 5 times the height above ground of any sensitive receptors (i.e. schools,

businesses, homes, etc.) air monitoring is also required. Please note that vehicular traffic is considered transient and not exposed for a long enough period to be considered a sensitive receptor.

b) The existing coating does not contain lead. By specification, a Class 2A containment is required to contain nuisance dust from escaping into the environment.

10) Contractor Prequalification. The Department has transitioned to requiring SSPC Painting Contractor Certification for all painting work performed regardless of the size of the project. For new steel shop painting, the AISC Sophisticated Paint Endorsement or SSPC QP3 certification is required. For field painting of new and existing structural steel, the contractor is required to be SSPC QP1 Certified. For projects requiring lead abatement, SSPC QP2 Certification is also required. As part of the certification process, an active project is required to be audited. For that purpose, SSPC QP7 Certification will be accepted on a case by case basis depending on the size of the project. These requirements are covered by the Special Provisions.

If you have questions or specific situations that need to be addressed please contact the Paint Technician for the District involved and/or Gary Kowalski at 217-785-2914, or by email at Gary.kowalski@illinois.gov.

Attachments (2)
GMK/kktABD10.1bridgepaintingpolicy-20100427

Overcoating Guide

The most significant factors that affect the ability of an existing coating to be spot cleaned and overcoated are the amount of corrosion, the thickness of the existing coating, and the adhesion of the existing coating.

The amount of corrosion shall be estimated based on field observations. Typically it can be determined from the most recent Pontis inspection, where the amount of corrosion will be listed. The percent corrosion when totaling condition states 2 through 4 should be below 15%. If higher, it will not likely be economical to power tool clean and overcoat. In that case two options remain: do not paint the surfaces at all, or perform full removal by abrasive blasting or power tools and repaint.

The thickness of the coating should be measured with a calibrated film thickness gauge. The adhesion should be measured using ASTM D 3359, Method A (X Cut).

The following table should be used to assess the existing coating for over coating risk.

Adhesion Rating	**Thickness (mils)**			**% Rust**
ASTM D 3359, Method A	< 10	10-20	>20	> 15
5A	NR	NR	LR	NO
4A	NR	NR	LR	NO
3A	NR	LR	MR	NO
2A	LR	MR	NO	NO
1A	MR	NO	NO	NO
0A	NO	NO	NO	NO

NR = essentially no risk
LR = low risk
MR = moderate risk
NO = condition too poor to salvage

Paint System Selection Flow Chart

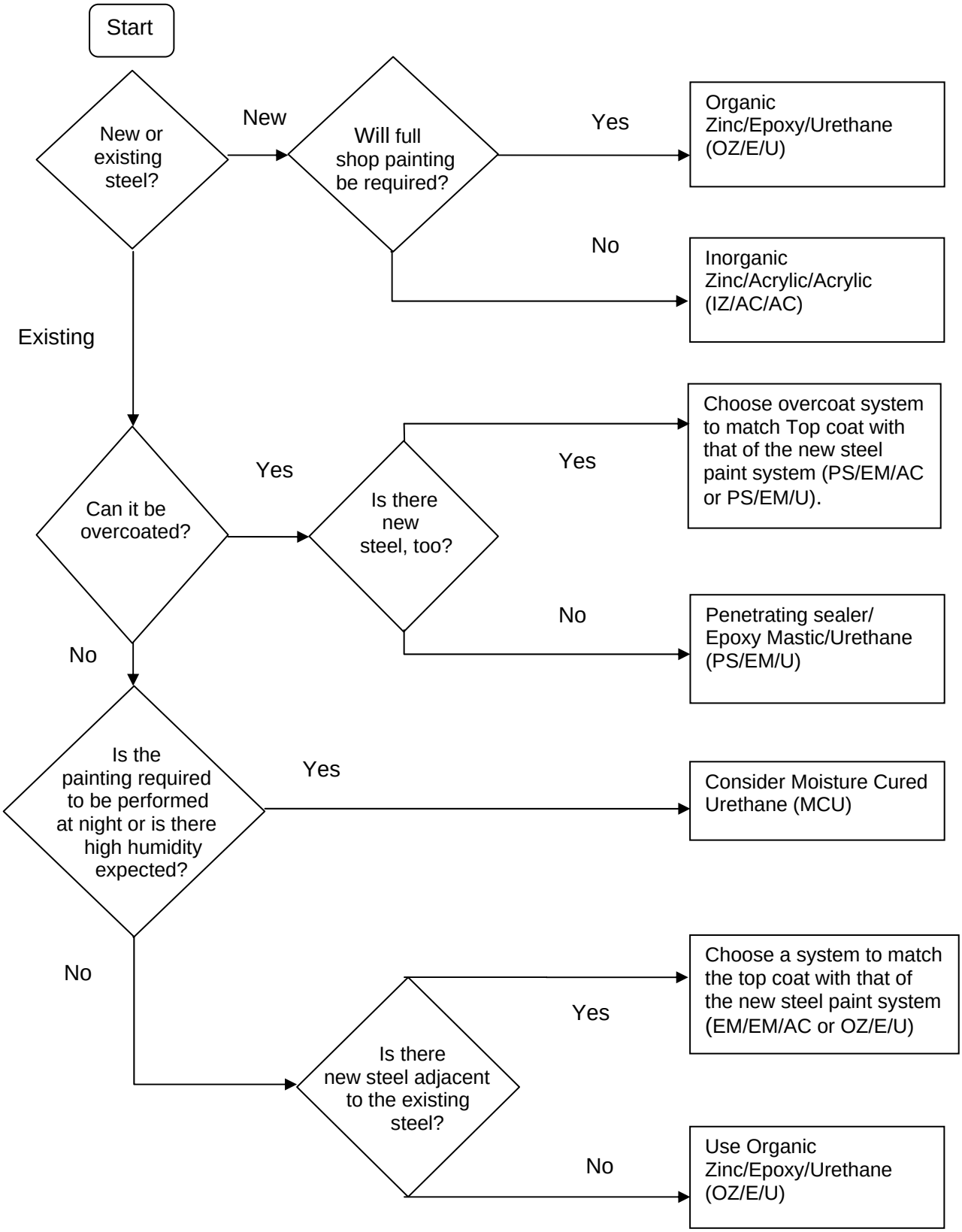

Illinois Department of Transportation

Memorandum

To:	ALL BRIDGE DESIGNERS
From:	Ralph E. Anderson
Subject:	AASHTO Manual for Bridge Evaluation
Date:	April 3, 2009

The American Association of State Highway and Transportation Officials has published the following publication:

Manual for Bridge Evaluation

Item Code: MBE-1 (Print), MBE-1-UL (Online)

You can order this, and all AASHTO publications, by calling 1-800-231-3475 or visiting the online bookstore, https://bookstore.transportation.org

Effective immediately, this publication replaces the *AASHTO Manual for Condition Evaluation of Bridges* and the *AASHTO Guide Manual for Condition Evaluation and Load and Resistance Factor Rating (LRFR) of Highway Bridges*. It is applicable to the performance of bridge evaluation, including inspection, material and load testing and load rating of bridges.

TAA/kktABDaashtomanualBridgeevaluation-20090126

Illinois Department of Transportation

Memorandum

To:	ALL BRIDGE DESIGNERS	09.1
From:	Ralph E. Anderson	Ralph E. Anderson
Subject:	Guidelines for Structural Assessment Reports for Contractor's Means and Methods	
Date:	March 9, 2009	

This memorandum provides guidance to engineers regarding the Guide Bridge Special Provision for Structural Assessment Reports for Contractor's Means and Methods (GBSP 67). This special provision will initially be applicable for pilot projects selected by the Department beginning with the June 12, 2009 letting. For future lettings, appropriate projects may be selected by the Department and the Phase II engineers will be notified that GBSP 67 is applicable.

After the I-35W Bridge in Minnesota collapsed, the Federal Highway Administration issued Technical Advisory T5140.28, which charged state transportation agencies with ensuring that construction loading and stockpiled materials placed on structures do not overload its members.

In response to this advisory, the Department has developed GBSP 67, which requires the contractor to submit Structural Assessment Report(s) (SARs) to the engineer for approval. The SARs shall demonstrate that the structural demands of the applied loads due to the contractor's means and methods will not exceed the available capacity of the structure at the time the loads are applied. GBSP 67 is intended to replace the special provision for Demolition Plans for Removal of Existing Structures (GBSP 63) and to supplement the special provisions for erection of curved or complex steel structures.

For state owned bridges, the SARs shall be submitted by the contractor to the Resident Engineer and forwarded to the Bureau of Bridges and Structures (BBS), Attn: Design Section Chief, for review and approval. These submittals will be processed in the same manner as other construction–related submittals to BBS. BBS will respond to the District. For local agency owned bridges, the SARs shall be submitted to the owner's Resident Engineer. SARs for local agency projects will not be reviewed by BBS.

To assist in determining the available capacity for the SARs, each project with an existing structure will have an Existing Structure Information Package (ESIP) available to the contractor at the time the contractor obtains the plans and proposal prior to bidding. This package will typically include existing or "As-Built" plans and the latest National Bridge Inspection Standards (NBIS) inspection report. For state owned bridges, the District will be responsible for providing this package. After award, requests by the contractor for additional information shall be accompanied by justification. The District may ask the Phase II consultant engineer to prepare the ESIP. For local agency owned bridges, the owner will be responsible for providing this information to the contractor if the information is requested.

RESPONSIBILITIES

To assist in addressing the requirements of the SAR special provision, the responsibilities of the Phase II engineer, the contractor and the contractor's structural engineer are noted below.

Responsibilities of the Phase II Engineer:

- For all projects on state owned bridges:

  - Verify with BBS whether a note is required on the contract plans stating that a consultant pre-qualification category other than "Highway Bridges-Typical" will be required for preparation of the SARs. If a note is required, BBS will identify which pre-qualification category should be specified in the plan note shown below.

- For projects with an existing structure:

  - Review the existing and/or "As-Built" plans, the latest NBIS inspection report, shop plans and other reports such as the Bridge Condition Report (BCR), Structure Geotechnical Report (SGR) or Hydraulic Report that were not completed by that Phase II engineer.

  - Determine whether any notes should be provided on the contract plans advising the contractor there is structure deterioration. In addition to the General Note shown below, other advisory notes may be shown. These notes can be very helpful to the contractor and other field personnel. (For example, "Beam 1 is severely deteriorated and the Contractor is advised to put no loads on it.")

- Consider whether the condition of the existing structure will require the contractor to work under some restrictions. (For example, if the existing structure is so deteriorated that the contractor will not be able to bring a crane on the structure and will need to work from the stream, then making arrangements to acquire a permit to work in the water may be appropriate.)

- Obtain the current ratings or rating factors (Inventory and Operating) and any live load restrictions that are on file for the existing structure and show them on the plans. These ratings or rating factors are measures of the live load carrying capacity.

● <u>Information to be shown on the contract plans (for state owned bridges), on a case-by-case basis (per discussion with BBS), for some complicated projects:</u>

- Add the following note to the General Notes of the structure plans:

  "The Contractor shall retain the services of an engineering firm, prequalified in the IDOT consultant selection category of Highway Bridges (Advanced Typical / Complex), for preparation of the Structural Assessment Report(s). Contractor's pre-approval shall not be applicable for this project. See Special Provision."

● <u>Additional information to be shown on the contract plans when there is an existing structure. (Structures that are allowed to carry legal loads only are not considered to have a live load restriction for the purposes of GBSP 67. Structures with signs stating "40 Tons Gross, 10 Tons Axle" indicate that only legal loads are allowed.):</u>

- For existing structures designed by the AASHTO Standard Specifications for Highway Bridges, add the following note to the General Notes of the structure plans:

  "<u>Current Ratings on File for Existing Structure</u>
  Inventory: HS__
  Operating: HS__
  Live Load Restrictions: __ ["Yes (_____)" (Provide a value in tons)
  "No"]

  Inventory and Operating Ratings and Live Load Restrictions are provided for information only. Inventory and Operating Ratings are based on HS loading and configuration. Live Load Restrictions are based on Illinois legal loads and configurations. The Ratings and Live Load Restrictions are not necessarily representative of capacities to support the Contractor's equipment."

- For existing structures designed by the AASHTO LRFD Bridge Design Specifications, add the following note to the General Notes of the structure plans:

  "<u>Current Rating Factors on File for Existing Structure</u>
  Inventory: RF__
  Operating: RF__
  Live Load Restrictions: __ ["Yes (_____)" (Provide a value in tons)
  "No"]

  Inventory and Operating Rating Factors and Live Load Restrictions are provided for information only. Inventory and Operating Rating Factors are based on HL-93 loading and configuration. Live Load Restrictions are based on Illinois legal loads and configurations. The Rating Factors and Live Load Restrictions are not necessarily representative of capacities to support the Contractor's equipment."

- The following note shall be added to the General Notes of the structure plans when the Phase II engineer has determined there is deterioration of the existing structure resulting in a reduced load carrying capacity:

  "The Contractor is advised that the existing structure contains members that are in a deteriorated condition with reduced load carrying capacity. It is the Contractor's responsibility to account for the condition of the existing structure when developing construction procedures for the complete or partial removal, or replacement of the structure. An Existing Structure Information Package is available upon request as noted in the special provisions."

<u>Responsibilities of the Contractor:</u>

- Determine the intended means and methods of construction.

- Provide for SARs preparation by an Illinois licensed Structural Engineer. As noted in GBSP 67, the contractor shall be pre-approved to prepare SARs or shall retain a pre-qualified engineering firm to prepare SARs. For some complicated projects, pre-approved contractors may not be allowed to prepare the SARs and the contractor shall retain a pre-qualified engineering firm. On projects where these restrictions apply, there will be a note on the plans indicating this and also stating the required pre-qualification category for the engineering firm.

- Submit the SARs to the Resident Engineer along with evidence of pre-approval/pre-qualification as noted in GBSP 67.

- Upon approval of the SARs, implement measures necessary to ensure that the approved SARs are followed. (For example, if a crane will only be allowed to travel long certain beam lines, markings could be made on the deck to designate those lines.)

Responsibilities of the Contractor's Structural Engineer:

- For projects with an existing structure, review the ESIP information and any additional information provided to the contractor. Field verification of the current condition of the structure may be required.

- Verify that the structural demands of the applied loads due to the contractor's means and methods will not exceed the available capacity of the structure at the time the loads are applied. For existing structural components, the existing condition shall be considered. The appropriate load distributions according to AASHTO shall be used.

- Provide sealed SARs that clearly show the work covered (including allowed and/or restricted load locations), calculations of the available capacity, calculations of the load effects, any assumptions made, and comparison of the largest load effect and the available capacity. Separate portions of the work may be covered by separate SARs which may be submitted at different times.

GUIDELINES FOR THE PREPARATION OF SARS

To reduce the number of items to be analyzed and reviewed and the number of submittals, the structural engineer may wish to develop maximum load effect envelopes. These may provide the greatest amount of flexibility to the contractor. To produce a maximum load effect envelope, calculate the greatest possible effects on the structure based on several alternative construction plans or alternative loading patterns using the contractor's means and methods. Then determine the available capacity at the controlling locations. The SAR is only required to demonstrate that the maximum effect due to loading will be less than the available capacity at that location. Lists of the activities covered by the envelope and/or restrictions to the contractor's means and methods should be shown in the SAR. This will allow the contractor a wider range of options in the field. It will also inform the contractor's personnel that this wider range of options is acceptable according to the approved SAR. (For example, consider a bridge where a portion of the existing deck has been removed. Although there may be only one concrete truck on the structure at times and two concrete trucks on the structure at other times, the SARs would only need to verify that there is adequate capacity during the worst of these conditions. The intermediate, lesser load cases would not need to be shown.)

Since contractors may need to make revisions to their intended procedures due to weather, availability of equipment and personnel, etc., SARs that have been well thought-out and include the load effects of possible alternate means and methods will greatly assist the contractor in meeting critical path schedules and minimize the need for revised SARs submittals. (For example, a contractor may wish to remove an existing superstructure by placing removal equipment on the banks of a stream below. However, if the stream floods, the contractor may want to place the removal equipment on the existing structure. If the submitted SARs have already evaluated this condition and demonstrated that the maximum effects caused by this applied load will be less than the available capacity at all locations, then the contractor may switch from the original plan to the new plan without submitting a new SAR.)

If the contractor wants to change a load or load pattern, a SAR resubmittal will only be required when the change results in a greater load effect at a controlling location as determined by the contractor's structural engineer. The contractor's structural engineer shall provide written verification for the contractor to submit to the Engineer indicating that the specified revised loads do not result in an increased load effect.

After structures, or portions thereof, are closed to traffic and prior to removal of any portion of the existing structure, the contractor may move vehicles across the existing structure without a SAR provided the vehicles satisfy the requirements of Section 15-111 of the Illinois Vehicle Code or the FHWA document "Bridge Formula Weights" under the conditions noted in GBSP 67.

To meet the requirement in GBSP 67 that the contractor shall be responsible for following the approved SARs, lists of acceptable loadings at various stages should be well defined in the SARs to assist the contractor's personnel in ensuring that the approved SARs are followed. Clear and easy-to-follow summaries in the SARs of allowed/restricted movements, loads, conditions, etc., will permit the contractor's personnel to more readily recognize when an anticipated activity will not be in accordance with the approved SARs and to stop the activity until an approved SAR covering the activity is obtained. These summaries should be stated in language that will be understood by all personnel who are attempting to follow the SAR or who are attempting to ensure the SAR is followed.

Since there may be deterioration on an existing structure, the location of the controlling available capacity may not be obvious for each loading pattern.

An existing structure is likely to be posted for live load restrictions when the operating rating is less than HS20 or the operating rating factor is less than 1.0. For structures which are posted for live load restrictions, a SAR will always be needed for any applied construction loads and neither SAR exemption noted in GBSP 67 will be allowed (i.e., the SAR exemption for loads under 10 tons nor the SAR exemption for vehicles meeting the Section 15-111 of the Illinois Vehicle Code (see reference in GBSP 67)). The “Live Load Restrictions” line in the General Notes will show a “Yes” (with a value in parentheses, e.g., 15 Tons) for structures that are considered to have a live load restriction for the purposes of GBSP 67.

As noted in GBSP 67, the effects of the applied loads cannot exceed given capacity levels which are dependent on the type of work being done. For new construction and for portions of the existing structure that are to be reused, the specified available capacity is at the Inventory level, which is the design load level for normal service. For portions of the structure that are being removed, the specified available capacity is at the Operating level, which is the maximum permissible load level for occasional use. See the AASHTO Manual for Bridge Evaluation (MBE) for further information on determining the available capacity at each of these levels. Structures designed by the AASHTO Standard Specifications for Highway Bridges may utilize any of the methods shown in the MBE (Working Stress, Load Factor or Load and Resistance Factor). Structures designed by the AASHTO LRFD Bridge Design Specifications shall utilize the Load and Resistance Factor method shown in the MBE.

Firms involved in the development of the contract plans or firms which are performing project management and/or SAR review on that structure will not be eligible to develop a SAR for that project.

Please contact the Design Section Chief of the Bureau of Bridges and Structures with any questions.

GMK/ktALLBRIDGEDESIGNERS09.1-20090306

Illinois Department of Transportation

Memorandum

To:	ALL BRIDGE DESIGNERS	08.4
From:	Ralph E. Anderson *Ralph E. Anderson*	
Subject:	Drainage Manual Modification \ Pipe Culverts & Storm Sewers	
Date:	November 7, 2008	

This memorandum complements BDE Procedure Memorandum Number 65-08 Pipe Culverts and Storm Sewers. BDE PM 65-08 modifies Section 40-3.07 of the BDE Manual by revising the limitations that govern allowable pipe types for culverts and storm sewers. Per PM 65-08, the new procedures are applicable to all roadways beginning with the April 24, 2009 letting.

The revisions impact two chapters within the IDOT Drainage Manual; Chapter 6 Culvert Hydraulics and Chapter 8 Storm Sewers. Modify the chapters according to the information and direction included here:

Chapter 6, Section 6-002 Kind and Size of Culvert

Within the 3rd sentence of 6-002, **Delete:** "6 inches of cover measured from the top of the pipe to the bottom of the subbase". **Replace with:** "12 inches of cover from the top of the pipe to the top of the subgrade".

Replace Figure 6-002 with this table:

PIPE CULVERT CLASSES

Conditions	Pipe Culvert Class	Minimum Diameter
Entrances, regardless of ADT; and Roadways with ADT < 4,000	D	15"
Roadways with 4000 ≤ ADT < 10,000	C	18"
Roadways with ADT ≥ 10,000	A	24"

The Class and Material listings that immediately follow Figure 6-002 were compiled before 2004 and are consequently incomplete. Refer to Article 542.03 of the Standard Specifications for Road and Bridge Construction for the current listing.

Chapter 6, Section 6-003 Types of Culverts

Delete: Additional types of culverts will be discussed in this chapter, though not in great detail. More comprehensive information on the use of these products may be obtained from the manufacturer.

Insert: This chapter focuses on concrete and metal pipe materials. However, the list of allowable pipe types shown in Section 542 of the Standard Specifications for Road and Bridge Construction has expanded over recent years, allowing flexible pipe to be utilized in a wider range of conditions. For a given culvert installation, the calculations of headwater and outlet velocity follow the same procedures provided in 6-100 Hydraulic Analysis, regardless of pipe or material type. The procedures are taken directly from the FHWA publication entitled HDS5, Hydraulic Design of Highway Culverts. For the concrete and metal pipe types listed here, the nomographs, tables and charts required for headwater calculations are included at the end of this chapter. For allowable pipe types not listed here- such as plastic pipe- please refer to HDS5 for the analogous information. To automate culvert hydraulic analysis for any allowable pipe material or shape, refer to the software titles recommended in this manual's Chapter 14 Computer Programs.

Chapter 6, Section 6-100 Hydraulic Analyses

Insert at the end of the 1st paragraph: The culvert designer should recognize that Section 40-3.07 of the BDE Manual allows the contractor to bid the most cost effective material type for pipe culverts, choosing among the allowable types for the pipe class and diameter specified in the contract plans. To accommodate the contractor's selection, the designer has to anticipate the contractor may choose ANY of the allowable material types for the specified class of culvert. It follows that in order to ensure the as-built installation satisfies design constraints on headwater and outlet velocity, design calculations should utilize an appropriately conservative Manning roughness n- value from the list of allowable materials within the given class of pipes. The correct approach is dependent on the controlling design flow condition. To satisfy headwater constraints in outlet control flow conditions, design calculations should employ the highest Manning roughness (n-value) for the pipe types within the specified class. Utilize a range of 0.010 to 0.013 (concrete) for Class A and 0.027 to 0.028 (corrugated metal) for Class C and Class D, noting that n-value varies by pipe diameter for corrugated metal. (See Figure 6-805b.) Analogously, to ensure outlet velocity limits or constraints are satisfied for pipe culverts operating under inlet control flow conditions, design calculations should employ the lowest available Manning roughness among the material types within the specified class. Utilize 0.010 to 0.013 (concrete) for Class A and 0.009 to 0.011 (PVC) for Class C and Class D. Given this direction, the designer should also anticipate the potential impact of material selection when the estimated design headwaters are on the cusp of inlet and outlet control.

Chapter 8, Section 8-009.06 Type of Materials

Insert after the 1st sentence: The storm sewer designer should recognize that Section 40-3.07 of the BDE Manual allows the contractor to bid the most cost effective material type for pipe storm drains, choosing among the allowable types for the pipe class and diameter specified in the contract plans. To accommodate the contractor's selection, the designer has to anticipate the

contractor may choose ANY of the allowable material types for the specified n-value from the list of allowable materials within the given class of pipes. For both Class A and B, utilize concrete with roughness ranging from 0.013 to 0.016. In addition to accounting for rougher pipe in this manner, the designer also needs to consider any adverse affects on design features due to the implementation of a smoother, thinner pipe than the concrete pipe assumed in hydraulic design calculations.

Delete: The three criteria currently listed as the basis for selecting an acceptable storm sewer material type. Replace with this table:

STORM SEWER CLASSES

Conditions	Storm Sewer Class
Roadways with ADT < 1,500 or pipe location is > 12 ft (3.6 m) from the edge of the traveled way	B
Roadways with ADT ≥ 1,500 and pipe location is ≤ 12 ft. (3.6 m) from the edge of the traveled way	A

Chapter 8, Section 8-009.07 Cover

Delete: The 6th sentence of this section: "However, in no case should a cover depth less than 0.5 ft below the subbase be used."

Insert: "For all cases, the minimum cover depth from top of the pipe to top of the subgrade is 12 inches".

Chapter 8 does not provide a list of the available material types within the two respective classes of storm sewer materials. See Article 550.03 of the Standard Specifications for Road and Bridge Construction for the Class A and Class B listings.

These modifications will be incorporated into the Drainage Manual in a future update. The Drainage Manual is posted with other Bureau of Bridges and Structures technical manuals at: http://www.dot.il.gov/bridges/brmanuals.html. Questions can be directed to Matt O'Connor of our Hydraulics Unit at 217-785-2917 or matthew.oconnor@illinois.gov.

MO'C/kktABDdrainagemanualmodification08.4-20081107
cc: Bureau of Design and Environment / Attn: Tara Elston

Illinois Department of Transportation

Memorandum

To:	ALL BRIDGE DESIGNERS
From:	Ralph E. Anderson
Subject:	Metric Manuals
Date:	March 19, 2007

Effective today, all Metric manuals produced by the Bridge Office as well as ABD memo 97.3 (Metric Guidelines) will be archived. The Department discontinued metric units on new designs effective April 1, 1999 and consequently the metric manuals have not been updated to reflect the latest English details and policies. Most metric projects have been let by now but there are still occasionally a few projects. If you have a metric project and are still in need of design policies and details, please contact the Bridge Office.

KLR/bb28775