Illinois Department of Transportation

To:	Keith Roberts	Attn:	Carrie Nelsen
From:	Jack A. Elston	By:	Michael Brand MDB
Subject:	Pavement Design Approval		
Date:	August 20, 2019		

Route: FAI 57 (I-57)
Section: (28-5-2,-3,-4,-5)R-2;28-5(B-2)
County: Franklin
Contract: 78631
Limits: County Club Road to Milepost 66 (3.2 miles)

We have reviewed the pavement design for the above referenced project which was most recently submitted on July 26, 2019. The scope of the project is to add a fifth and sixth lane in the median and to remove and replace the existing pavement under the overpasses.

For the "add lanes" portion of the project, the pavement design resulted in two options: 14" Full-Depth HMA and 10.5" PCC. For the removal and replacement portions, the pavement design also resulted in two options: 16.75" Full-Depth HMA and 11.5" PCC. In each case, the life cycle cost analysis resulted in the pavement options being within 10% of each other and we concur with the District in the use of alternate bidding.

In summary the approved alternate bidding options are as follows:

<u>I-57 Add Lanes</u>

14" Full-Depth HMA w/HMA Shoulders	10.5" PCC w/PCC Shoulders
10" Subbase Granular Material	10" Subbase Granular Material

<u>I-57 Removal and Replacement</u>

16.75" Full-Depth HMA w/HMA Shoulders	11.5" PCC w/PCC Shoulders
10" Subbase Granular Material	10" Subbase Granular Material

If you have any questions, please contact Mike Brand at (217) 782-7651.

Illinois Department of Transportation

Memorandum

To:	Jack Elston	Attn: Michael Brand
From:	Carrie Nelsen	By: Valerie Rolla
Subject:	Pavement Design – Alternate Bid	
Date:	July 26, 2019	

Route: I-57 (FAI 57)
Section: (28-5,-2,-3,-4,-5)R-2;28-5(B-2)
County: Franklin
Contract: 78631

This project involves the expansion of approximately 3.2 miles of I-57. The project begins at Country Club Road and continues to MP 66. The proposed work consists of adding a 12' lane and a 12' inside shoulder northbound and southbound, converting the median from open drainage to a closed drainage system and adding a concrete median barrier wall. Additionally, we will mill and fill the existing pavement with 2" HMA surface removal and 2" HMA surface course, remove and replace the existing pavement under the overpasses, and remove and replace the dual structures over Pond Creek. The project is scheduled for the September 2019 letting.

District 9 is requesting to use alternate bidding to offer the opportunity to construct the new 12' 3rd lane, new 12' inside shoulder, and pavement replacement under the overpasses as either HMA or PCC pavement on the I-57 6 lane expansion project funded by IDOT's Competitive Freight Grant Program. Alternate bidding is advantageous for this project as we have two equivalent pavement designs (HMA and PCC) for the full depth pavement and shoulder and prefer to let the competitive market and competitive bidding determine the most economical pavement.

Our current policy refers to Figure 54-1.A of the BDE manual which presents a flowchart that helps determine the appropriate pavement design methodology. However, this project does not fully meet the current 3 categories offered in Figure 54-1.A based off previously applied definitions of the categories as follows:

- *New Construction* – not new construction because we are using the existing alignment and pavement
- *Reconstruction* – not reconstruction because we are not reconstructing the existing lanes
- *Pavement widening > than 6'* – not really pavement widening because we are reconstructing the entire median with new 12' lanes, 12' shoulders, concrete barrier wall and converting to a closed drainage system.

The project is unique with significant volumes of concrete needed for the 12,081 feet of 44" double faced concrete barrier wall, 680 CY of concrete structures, 599 CY of concrete superstructures, and 352 CY of concrete superstructure approach slab. And, requires significant volumes of HMA needed for the 12,407 tons for the 2" poly HMA surface mix to resurface the existing NB and SB lanes. Alternate bidding is advantageous for this project as we have two equivalent pavement designs (14" HMA full depth or 10 ½" PCC with 4" stabilized subbase) and prefer to let the competitive market and competitive bidding determine the most economical pavement thus increasing competition and optimizing funding for this project.

Considering the new lane will be constructed on the median side, it is not expected to carry the same amount of heavy truck traffic that is typically designed for the far right lane. To reinforce this, the district will include signing in the plans limiting heavy truck traffic to the two right lanes. Since only the inside passing lane is being designed, the traffic used for the pavement design was reduced to match the distribution of traffic shown in Chapter 54 for the traffic remaining outside of the design lane. The resultant HMA pavement thickness of 14" matches the design provided by BMPR for contract 78184 in January of 2010 (See attached memo).

The traffic used for the pavement design for the pavement removal and replacement under the overpasses matches the requirements for design lane distribution in Chapter 54.

The life cycle cost analysis of the PCC and HMA costs are within 10%. The district is planning to alternate bid this project.

The mechanistic pavement design and life cycle cost analysis for the add lane and the pavement replacement are attached.

LOCATION MAP

I-57 FRANKLIN COUNTY

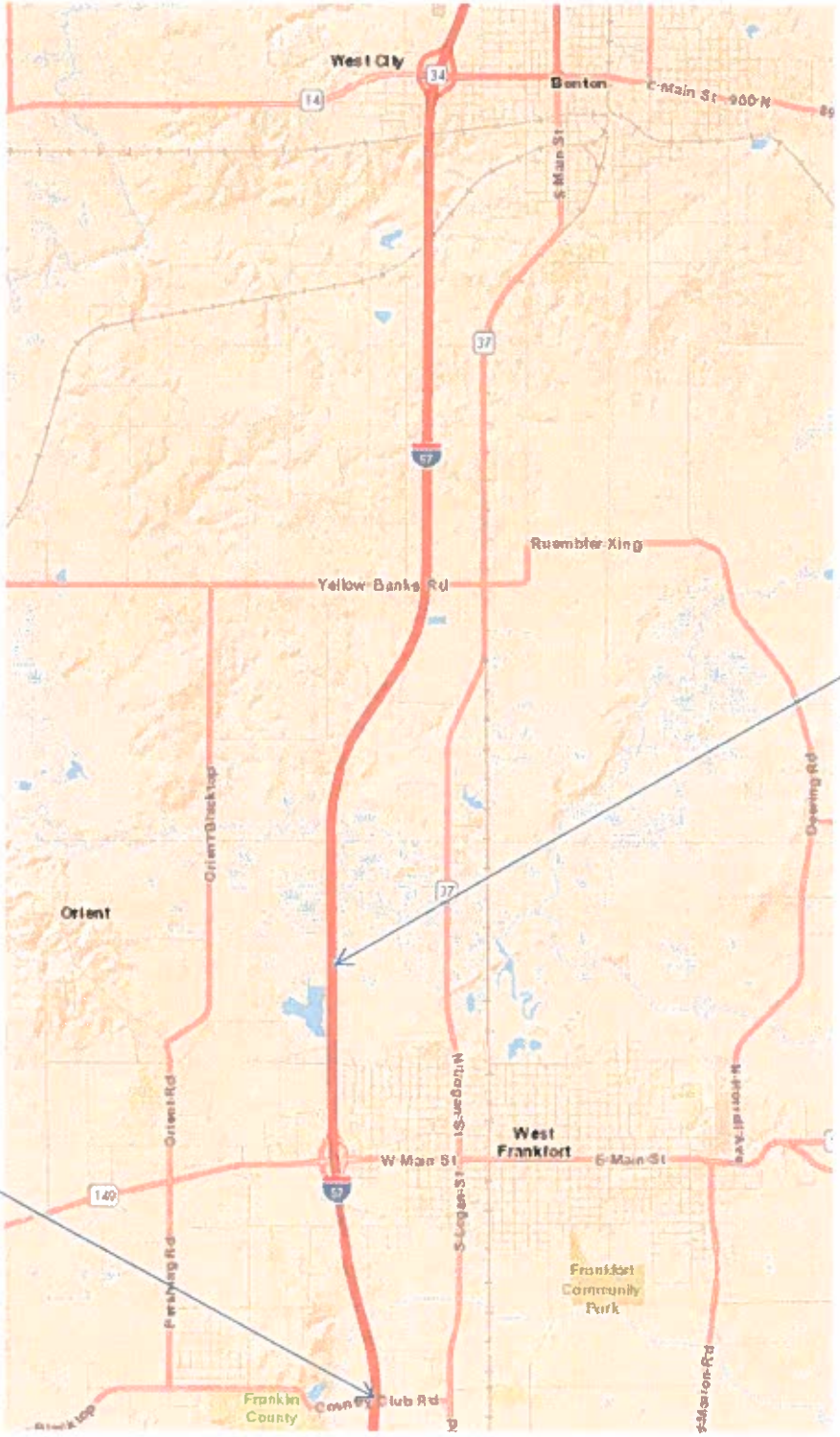

BEGIN PROJECT
MP 66
STA. 79+00

END PROJECT
SN 028-0058
Country Club Road

TYPICAL SECTION – 12' LANE, 11.5' SHOULDER, CONCRETE BARRIER
ALTERNATE A

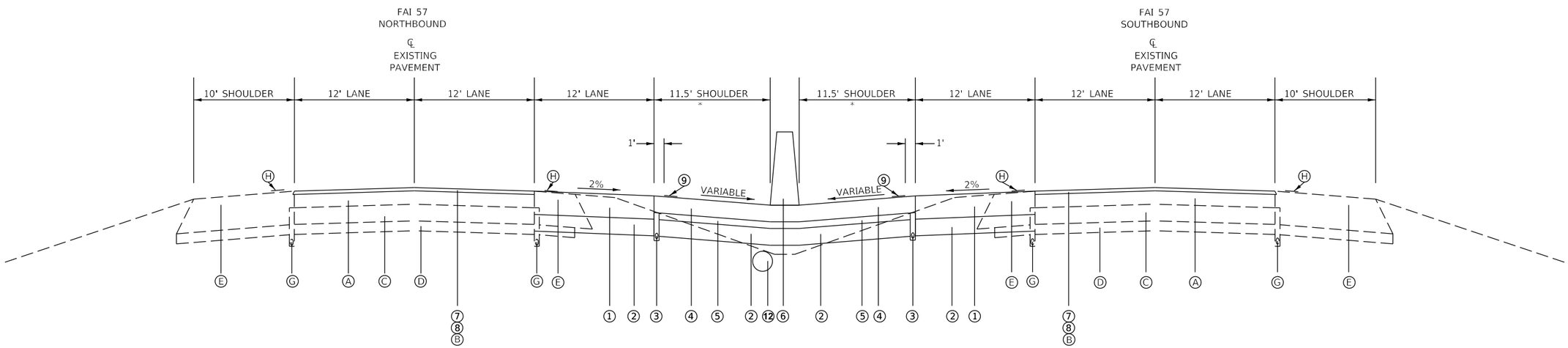

NORTHBOUND:

STA. 79+00	TO	STA. 107+00	
STA. 107+00	TO	STA. 131+50	(GAP FOR BRIDGE)
STA. 131+50	TO	STA. 154+27	
STA. 161+03	TO	STA. 168+40	
STA. 175+25	TO	STA. 177+45	
STA. 183+30	TO	STA. 209+10	
STA. 211+28.2	TO	STA. 213+71.9	(GAP FOR BRIDGE)
STA. 215+90	TO	STA. 221+41.13	

SOUTHBOUND:

STA. 79+00	TO	STA. 107+00	
STA, 107+00	TO	STA. 131+50	(GAP FOR BRIDGE)
STA. 131+50	TO	STA. 154+27	
STA. 161+03	TO	STA. 168+40	
STA. 175+25	TO	STA. 177+45	
STA. 183+30	TO	STA. 209+10	
STA. 211+28.2	TO	STA. 213+71.9	(GAP FOR BRIDGE)
STA. 215+90	TO	STA. 219+66.37	

* SHOULDER WIDTH VARIES FROM STA. 219+93.6

LEGEND

EXISTING

- Ⓐ EXISTING HOT-MIX ASPHALT BINDER COURSE, 8"
- Ⓑ EXISTING POLYMERIZED HOT-MIX ASPHALT SURFACE COURSE, 2"
- Ⓒ EXISTING RUBBILIZED PAVEMENT, 10"
- Ⓓ EXISTING AGGREGATE SUBBASE, 6"
- Ⓔ EXISTING HOT-MIX ASPHALT SHOULDERS, 19" AVERAGE THICKNESS
- Ⓖ EXISTING PIPE UNDERDRAIN
- Ⓗ EXISTING 16" RUMBLE STRIP

PROPOSED

- ① **HOT-MIX ASPHALT PAVEMENT (FULL DEPTH), 14"**
- ② **SUBBASE GRANULAR MATERIAL, TYPE A, 10"**
- ③ **PIPE UNDERDRAINS, 4"**
- ④ **HOT-MIX ASPHALT SHOULDERS, 10"**
- ⑤ **SUBBASE GRANULAR MATERIAL, TYPE A, 4"**
- ⑥ **CONCRETE BARRIER**
- ⑦ **HOT-MIX ASPHALT REMOVAL, 2"**
- ⑧ **POLYMERIZED HOT-MIX ASPHALT SURFACE COURSE, MIX "E", N90, 2"**
- ⑨ **16" RUMBLE STRIP**
- ⑫ **STORM SEWER**

MODEL: Default
FILE NAME: pw:\\pwidot\Documents\IDOT Offices\District 9\Projects\78631\CADData\CADsheets\78631-SHEB-Typ_Sch_Tles_GeopakElements.dgn

USER NAME = pritchettl	DESIGNED -	REVISED -	STATE OF ILLINOIS DEPARTMENT OF TRANSPORTATION	TYPICAL SECTIONS ALTERNATE A	F.A.I. RTE.	SECTION	COUNTY	TOTAL SHEETS / SHEET NO.
	DRAWN -	REVISED -			57	*	FRANKLIN	254 / 18
PLOT SCALE = 100.0000 ' / in.	CHECKED -	REVISED -					CONTRACT NO. 78631	
PLOT DATE = 7/3/2019	DATE -	REVISED -		SCALE: SHEET OF SHEETS STA. TO STA.		ILLINOIS	FED. AID PROJECT	

*(28-5,-2,-3,-4,-5)R-2;28-5(B-2)

TYPICAL SECTION – UNDERPASSES – 12' LANE, 11.5' SHOULDER, CONCRETE BARRIER
ALTERNATE A

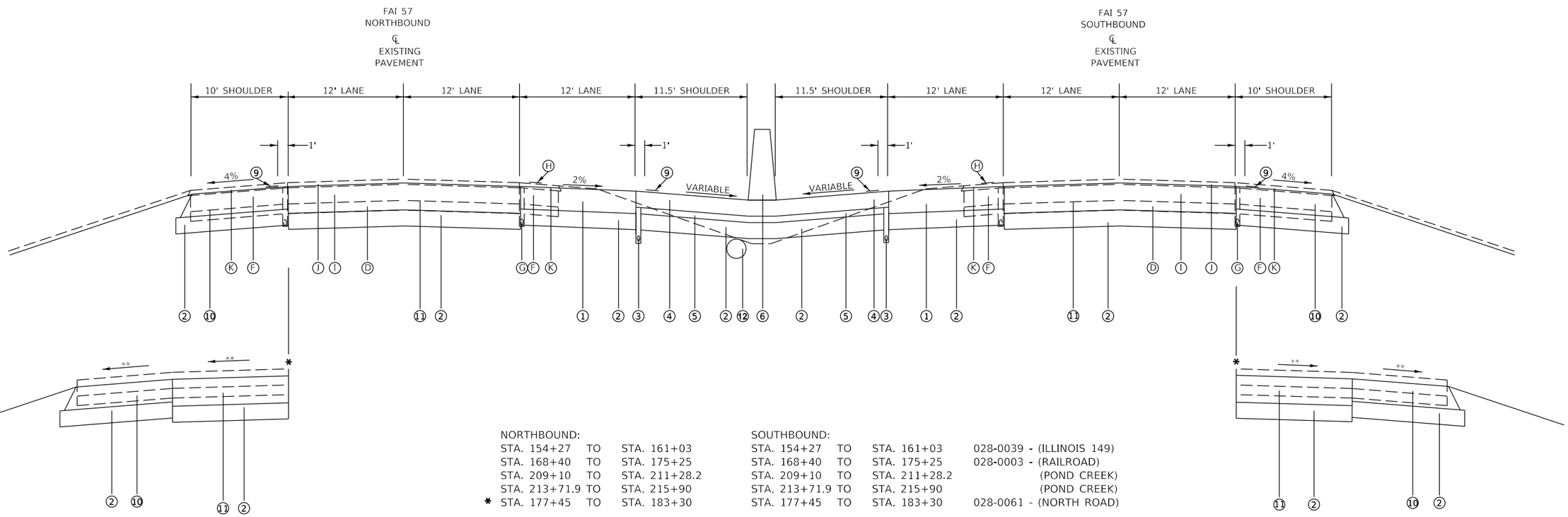

NORTHBOUND:

	STA. 154+27	TO	STA. 161+03
	STA. 168+40	TO	STA. 175+25
	STA. 209+10	TO	STA. 211+28.2
	STA. 213+71.9	TO	STA. 215+90
*	STA. 177+45	TO	STA. 183+30

SOUTHBOUND:

STA. 154+27	TO	STA. 161+03	028-0039 -	(ILLINOIS 149)
STA. 168+40	TO	STA. 175+25	028-0003 -	(RAILROAD)
STA. 209+10	TO	STA. 211+28.2		(POND CREEK)
STA. 213+71.9	TO	STA. 215+90		(POND CREEK)
STA. 177+45	TO	STA. 183+30	028-0061 -	(NORTH ROAD)

** MATCH EXISTING

** MATCH EXISTING

LEGEND

EXISTING

- Ⓐ EXISTING HOT-MIX ASPHALT BINDER COURSE, 8"
- Ⓑ EXISTING POLYMERIZED HOT-MIX ASPHALT SURFACE COURSE, 2"
- Ⓒ EXISTING RUBBILIZED PAVEMENT, 10"
- Ⓓ EXISTING AGGREGATE SUBBASE, 6"
- Ⓔ EXISTING HOT-MIX ASPHALT SHOULDERS, 6 3/4"
- Ⓕ EXISTING BITUMINOUS SHOULDER, 13" AVERAGE THICKNESS
- Ⓖ EXISTING PIPE UNDERDRAIN
- Ⓗ EXISTING 16" RUMBLE STRIP
- Ⓘ EXISTING JOINTED PCC PAVEMENT, 10"
- Ⓙ EXISTING POLYMERIZED HOT-MIX ASPHALT, 3 1/4"
- Ⓚ EXISTING HOT-MIX ASPHALT SHOULDERS, 2"

PROPOSED

- ① **HOT-MIX ASPHALT PAVEMENT (FULL DEPTH), 14"**
- ② **SUBBASE GRANULAR MATERIAL, TYPE A, 10"**
- ③ **PIPE UNDERDRAINS, 4"**
- ④ **HOT-MIX ASPHALT SHOULDERS, 10"**
- ⑤ **SUBBASE GRANULAR MATERIAL, TYPE A, 4"**
- ⑥ **CONCRETE BARRIER**
- ⑦ **HOT-MIX ASPHALT REMOVAL, 2"**
- ⑧ **POLYMERIZED HOT-MIX ASPHALT SURFACE COURSE, MIX "E", N90, 2"**
- ⑨ **16" RUMBLE STRIP**
- ⑩ **HOT-MIX ASPHALT SHOULDERS, 8"**
- ⑪ **HOT-MIX ASPHALT PAVEMENT (FULL DEPTH), 16 3/4"**
- ⑫ **STORM SEWER**

MODEL: Default
FILE NAME: pw:\\ildnxcom.dot.illinois.gov:PWIDOT\Documents\IDOT Offices\District 9\Projects\78631\CADData\CADsheets\78631-Shtb-Typ_Sch_Tlbs_GeosaktElements.dgn

USER NAME = pritchettll	DESIGNED -	REVISED -	
	DRAWN -	REVISED -	
PLOT SCALE = 100.0000 ' / in.	CHECKED -	REVISED -	
PLOT DATE = 7/3/2019	DATE -	REVISED -	

STATE OF ILLINOIS
DEPARTMENT OF TRANSPORTATION

TYPICAL SECTIONS
ALTERNATE A

SCALE: | SHEET OF SHEETS | STA. TO STA.

F.A.I. RTE.	SECTION	COUNTY	TOTAL SHEETS	SHEET NO.
57	*	FRANKLIN	254	19

CONTRACT NO. 78631

ILLINOIS | FED. AID PROJECT

*(28-5,-2,-3,-4,-5)R-2;28-5(B-2)

TYPICAL SECTION – 12' LANE, 11.5' SHOULDER, CONCRETE BARRIER
ALTERNATE B

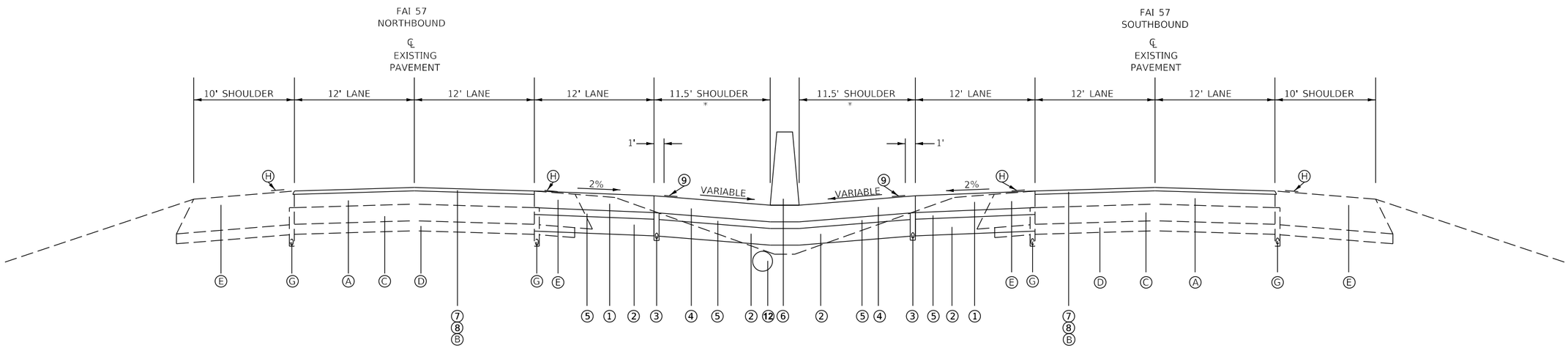

NORTHBOUND:

STA. 79+00	TO	STA. 107+00	
STA. 107+00	TO	STA. 131+50	(GAP FOR BRIDGE)
STA. 131+50	TO	STA. 154+27	
STA. 161+03	TO	STA. 168+40	
STA. 175+25	TO	STA. 177+45	
STA. 183+30	TO	STA. 209+10	
STA. 211+28.2	TO	STA. 213+71.9	(GAP FOR BRIDGE)
STA. 215+90	TO	STA. 221+41.13	

SOUTHBOUND:

STA. 79+00	TO	STA. 107+00	
STA. 107+00	TO	STA. 131+50	(GAP FOR BRIDGE)
STA. 131+50	TO	STA. 154+27	
STA. 161+03	TO	STA. 168+40	
STA. 175+25	TO	STA. 177+45	
STA. 183+30	TO	STA. 209+10	
STA. 211+28.2	TO	STA. 213+71.9	(GAP FOR BRIDGE)
STA. 215+90	TO	STA. 219+66.37	

* SHOULDER WIDTH VARIES FROM STA. 219+93.6

LEGEND

EXISTING

- Ⓐ EXISTING HOT-MIX ASPHALT BINDER COURSE, 8"
- Ⓑ EXISTING POLYMERIZED HOT-MIX ASPHALT SURFACE COURSE, 2"
- Ⓒ EXISTING RUBBILIZED PAVEMENT, 10"
- Ⓓ EXISTING AGGREGATE SUBBASE, 6"
- Ⓔ EXISTING HOT-MIX ASPHALT SHOULDERS, 19" AVERAGE THICKNESS
- Ⓖ EXISTING PIPE UNDERDRAIN
- Ⓗ EXISTING 16" RUMBLE STRIP

PROPOSED

- ① **PORTLAND CEMENT CONCRETE PAVEMENT, 10 1/2" (JOINTED)**
- ② **SUBBASE GRANULAR MATERIAL, TYPE A, 10"**
- ③ **PIPE UNDERDRAINS, 4"**
- ④ **PORTLAND CEMENT CONCRETE SHOULDERS, 10 1/2"**
- ⑤ **STABILIZED SUBBASE, 4"**
- ⑥ **CONCRETE BARRIER**
- ⑦ **HOT-MIX ASPHALT REMOVAL, 2"**
- ⑧ **POLYMERIZED HOT-MIX ASPHALT SURFACE COURSE, MIX "E", N90, 2"**
- ⑨ **16" RUMBLE STRIP**
- ⑫ **STORM SEWER**

MODEL: Default
FILE NAME: pw:\\planroom.dot.illinois.gov:PWIDOT\Documents\IDOT Offices\District 9\Projects\78631\CADData\CADsheets\78631-SHEB-Typ_Sec_Tles_GeopakElements.dgn

USER NAME = pritchettll	DESIGNED -	REVISED -	
	DRAWN -	REVISED -	
PLOT SCALE = 100.0000 ' / in.	CHECKED -	REVISED -	
PLOT DATE = 7/3/2019	DATE -	REVISED -	

STATE OF ILLINOIS
DEPARTMENT OF TRANSPORTATION

TYPICAL SECTIONS
ALTERNATE B

SCALE: | SHEET OF SHEETS | STA. TO STA.

F.A.I. RTE.	SECTION	COUNTY	TOTAL SHEETS	SHEET NO.
57	*	FRANKLIN	254	24
		CONTRACT NO. 78631		
	ILLINOIS	FED. AID PROJECT		

*(28-5,-2,-3,-4,-5)R-2;28-5(B-2)

TYPICAL SECTION – UNDERPASSES – 12' LANE, 11.5' SHOULDER, CONCRETE BARRIER
ALTERNATE B

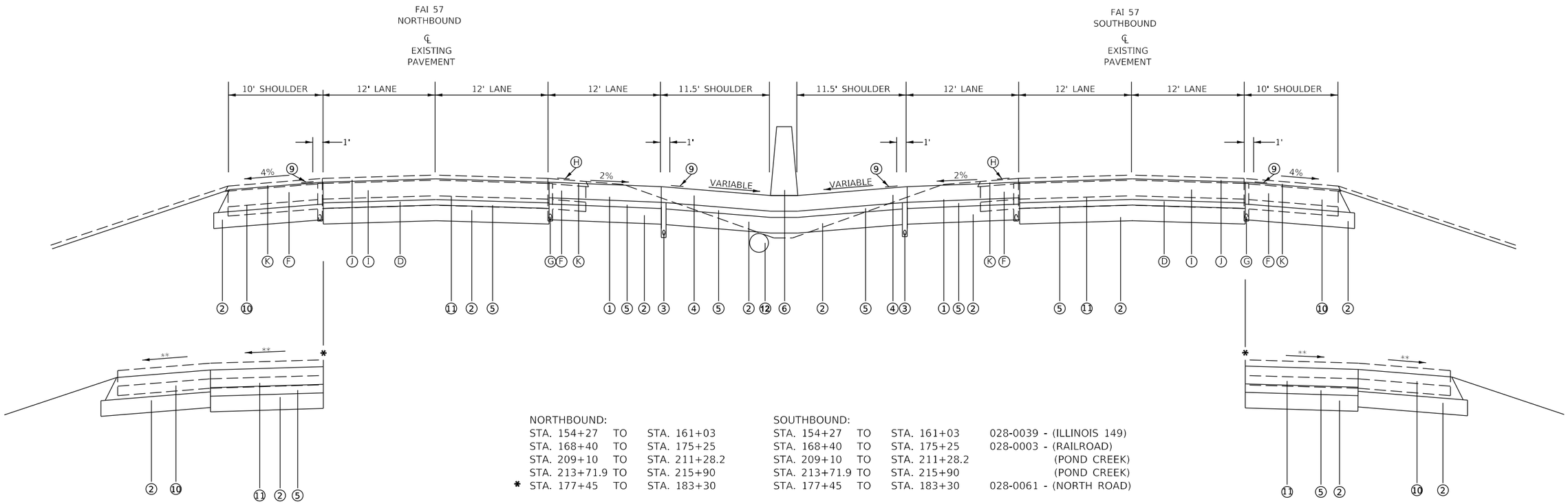

NORTHBOUND:			SOUTHBOUND:			
STA. 154+27	TO	STA. 161+03	STA. 154+27	TO	STA. 161+03	028-0039 - (ILLINOIS 149)
STA. 168+40	TO	STA. 175+25	STA. 168+40	TO	STA. 175+25	028-0003 - (RAILROAD)
STA. 209+10	TO	STA. 211+28.2	STA. 209+10	TO	STA. 211+28.2	(POND CREEK)
STA. 213+71.9	TO	STA. 215+90	STA. 213+71.9	TO	STA. 215+90	(POND CREEK)
* STA. 177+45	TO	STA. 183+30	STA. 177+45	TO	STA. 183+30	028-0061 - (NORTH ROAD)

LEGEND

EXISTING

- Ⓐ EXISTING HOT-MIX ASPHALT BINDER COURSE, 8"
- Ⓑ EXISTING POLYMERIZED HOT-MIX ASPHALT SURFACE COURSE, 2"
- Ⓒ EXISTING RUBBILIZED PAVEMENT, 10"
- Ⓓ EXISTING AGGREGATE SUBBASE, 6"
- Ⓔ EXISTING HOT-MIX ASPHALT SHOULDERS, 6 3/4"
- Ⓕ EXISTING BITUMINOUS SHOULDER, 13" AVERAGE THICKNESS
- Ⓖ EXISTING PIPE UNDERDRAIN
- Ⓗ EXISTING 16" RUMBLE STRIP
- Ⓘ EXISTING JOINTED PCC PAVEMENT, 10"
- Ⓙ EXISTING POLYMERIZED HOT-MIX ASPHALT, 3 1/4"
- Ⓚ EXISTING HOT-MIX ASPHALT SHOULDERS, 2"

PROPOSED

- ① **PORTLAND CEMENT CONCRETE PAVEMENT, 10 1/2" (JOINTED)**
- ② **SUBBASE GRANULAR MATERIAL, TYPE A, 10"**
- ③ **PIPE UNDERDRAINS, 4"**
- ④ **PORTLAND CEMENT CONCRETE SHOULDERS, 10 1/2"**
- ⑤ **STABILIZED SUBBASE, 4"**
- ⑥ **CONCRETE BARRIER**
- ⑦ **HOT-MIX ASPHALT REMOVAL, 2"**
- ⑧ **POLYMERIZED HOT-MIX ASPHALT SURFACE COURSE, MIX "E", N90, 2"**
- ⑨ **16" RUMBLE STRIP**
- ⑩ **PORTLAND CEMENT CONCRETE SHOULDERS, 11 1/2"**
- ⑪ **PORTLAND CEMENT CONCRETE PAVEMENT 11 1/2" (JOINTED)**
- ⑫ **STORM SEWER**

MODEL: Default
FILE NAME: pw:\\ulbanroom.dot.illinois.gov:PWIDOT\Documents\IDOT Offices\District 9\Projects\78631\CADData\CADsheets\78631-Shtb-Typ_Sch_Tlbs_GeopakElements.dgn

USER NAME = pritchettll	DESIGNED -	REVISED -	STATE OF ILLINOIS DEPARTMENT OF TRANSPORTATION	TYPICAL SECTIONS ALTERNATE B	F.A.I. RTE.	SECTION	COUNTY	TOTAL SHEETS	SHEET NO.
	DRAWN -	REVISED -			57	*	FRANKLIN	254	25
PLOT SCALE = 100.0000 ' / in.	CHECKED -	REVISED -					CONTRACT NO. 78631		
PLOT DATE = 7/3/2019	DATE -	REVISED -		SCALE: SHEET OF SHEETS STA. TO STA.		ILLINOIS	FED. AID PROJECT		

*(28-5,-2,-3,-4,-5)R-2;28-5(B-2)

BDE 5401 Template (Rev. 09/05/2013)

IDOT MECHANISTIC PAVEMENT DESIGN

Printed: 07/24/2019

PROJECT AND TRAFFIC INPUTS

(Enter Data in Gray Shaded Cells)

Route: I-57 (FAI 57)
Section: (28-5,-2,-3,-4,-5)R-2;28-5(B-2)
County: Franklin
Location: I-57 Country Club Rd to MP 66

Comments:

Design Date: 07/10/2019 LLP <-- BY
Modify Date: <-- BY

	ADT	Year
Current:	-	-
Future:	-	-

Facility Type: Interstate or Freeway
# of Lanes = 6 or more

Road Class: I
Rural or Urban ? Rural
Subgrade Support Rating (SSR): Poor
Construction Year: 2020
Design Period (DP) = 20 years

	Minimum ADT	Structural Design Traffic: Actual ADT	Actual %of Total ADT	% of ADT in Design Lane	
PV =	0	40,450	74.8%	P =	30%
SU =	500	1,870	3.5%	S =	10%
MU =	1500	11,750	21.7%	M =	10%
Struct. Design ADT =		54,070	(2030)		

TRAFFIC FACTOR CALCULATION

FLEXIBLE PAVEMENT

Cpv =	0.15	
Csu =	132.5	
Cmu =	482.53	
TF flexible (Actual) =	11.87	(Actual ADT)
TF flexible (Min) =	1.58	(Min ADT Fig. 54-2.C)

RIGID PAVEMENT

Cpv =	0.15	
Csu =	143.81	
Cmu =	696.42	
TF rigid (Actual) =	16.94	(Actual ADT)
TF rigid (Min) =	2.23	(Min ADT Fig. 54-2.C)

NEW CONSTRUCTION / RECONSTRUCTION PAVEMENT DESIGN CALCULATIONS

Full-Depth HMA Pavement

Use TF flexible =	11.87	
PG Grade Lower Binder Lifts =	PG 64-22	(Fig. 53-4.R)
HMA Mixture Temp. =	80.0	deg. F (Fig. 54-5.C)
Design HMA Mixture Modulus (E_{HMA}) =	560	ksi (Fig. 54-5.D)
Design HMA Strain (ε_{HMA}) =	59	(Fig. 54-5.E)
Full Depth HMA Design Thickness =	14.00	in. (Fig. 54-5.F)
Limiting Strain Criterion Thickness =	16.75	in. (Fig. 54-5.I)
Use Full-Depth HMA Thickness =	**14.00**	**inches**

Goto Map

Goto Map

JPC Pavement

Use TF rigid =	16.94	
Edge Support =	Untied	Shoulder or C.&G.
Rigid Pavt Thick. =	**10.50**	**in. (Fig. 54-4.E)**

CRC Pavement

Use TF rigid =	16.94	
IBR value =	2	
CRCP Thickness =	**9.75**	**in. (Fig. 54-4.M)**

TF MUST BE > 60 FOR CRCP

RECONSTRUCTION ONLY (SUPPLEMENTAL) PAVEMENT DESIGN CALCULATIONS

HMA Overlay of Rubblized PCC

Use TF flexible =	11.87	
HMA Overlay Design Thickness =	10.75	in. (Fig. 54-5.U)
Limiting Strain Criterion Thickness =	11.75	in. (Fig. 54-5.V)
Use HMA Overlay Thickness =	**10.75**	**inches**

Goto Map

Unbonded Concrete Overlay

Review 54-4.03 for limitations and special considerations.

JPCP Thickness = NA inches

CONTACT BMPR FOR ASSISTANCE

DESIGN TABLES FROM BDE MANUAL CHAPTER 54 - PAVEMENT DESIGN

Class I Roads	Class II Roads	Class III Roads	Class IV Roads
4 lanes or more Part of a future 4 lanes or more One-way Streets with ADT > 3500	2 lanes with ADT > 2000 One way Street with ADT <= 3500	2 Lanes (ADT 750 -2000)	2 Lanes (ADT < 750)

Facility Type	Min. Str. Design Traffic (Fig 54-2.C): PV	SU	MU
Interstate or Freeway	0	500	1500
Other Marked State Route	0	250	750
Unmarked State Route	No Min	No Min	No Min

Class Table for One-Way Streets: ADT	Class
0 - 3500	II
>3501	I

Class	Traffic Factor ESAL Coefficients: Rigid (Fig. 54-4.C) Csu	Rigid Cmu	Flexible (Fig. 54-5.B) Csu	Flexible Cmu
I	143.81	696.42	132.50	482.53
II	135.78	567.21	112.06	385.44
III	129.58	562.47	109.14	384.35
IV	129.58	562.47	109.14	384.35

Class Table for 2 or 3 lanes (not future 4 lane & not one-way street): ADT	Class
0 - 749	IV
750 - 2000	III
>2000	II

Number of Lanes	Design Lane Distribution Factors For Structural Design Traffic (Fig. 54-2.B): Rural P	Rural S	Rural M	Urban P	Urban S	Urban M
1 Lane Ramp	100%	100%	100%	100%	100%	100%
2 or 3	50%	50%	50%	50%	50%	50%
4	32%	45%	45%	32%	45%	45%
6 or more	20%	40%	40%	8%	37%	37%

BDE 5401 Template (Rev 09/05/2013) Printed: 08/20/2019

LIFE-CYCLE COST ANALYSIS: NEW CONSTRUCTION / RECONSTRUCTION

FULL-DEPTH HMA PAVEMENT

Standard Design

ROUTE		I-57 (FAI 57)
SECTION		(28-5,-2,-3,-4,-5)R-2;28-5(B-2)
COUNTY		Franklin
LOCATION		I-57 Country Club Rd to MP 66
FACILITY TYPE		INTERSTATE
PROJECT LENGTH		13850 FT => 2.62 Miles
# OF CENTERLINES		2 CL
# OF LANES		6 LANES
# OF EDGES		4 EP
LANE WIDTH - AVERAGE		12 FT
SHOULDER WIDTH	HMA Inside	11.5 FT
	HMA Outside	10 FT
	Total Width of Paved Shoulders	43 FT
PAVEMENT THICKNESS (FLEXIBLE)		14.00 IN 16.75 IN MAX
SHOULDER THICKNESS		10.00 IN Standard Design
POLICY OVERLAY THICKNESS		3.75 IN

FLEX PAVEMENT TRAFFIC FACTORS	MINIMUM	ACTUAL	USE
	1.58	11.87	11.87

Read Me!

HMA COST PER TON	UNIT PRICE
HMA SURFACE	$100.05 / TON
HMA TOP BINDER	$84.25 / TON
HMA LOWER BINDER	$77.16 / TON
HMA BINDER (LEVELING)	$0.00 / TON
HMA SHOULDER	$83.63 / TON

INITIAL COSTS

ITEM	THICKNESS	100% QUANTITY	UNIT		UNIT PRICE		COST
HMA PAVEMENT (FULL-DEPTH)	(14.00")	36,284	SQ YD	*	$71.18	/ SQ YD	$2,582,695
HMA SURFACE COURSE	(2.00")	4,078	TONS	*	$100.05	/ TON	$0
HMA TOP BINDER COURSE	(2.25")	4,606	TONS	*	$84.25	/ TON	$0
HMA LOWER BINDER COURSE	(9.75")	20,231	TONS	*	$77.16	/ TON	$0
HMA SHOULDER	(10.00")	44,529	SQ YD	*	$46.83	/ SQ YD	$2,085,293
CURB & GUTTER		0	LIN FT	*		/ LIN FT	$0
SUBBASE GRAN MATL TY C (TONS)		0	TONS	*		/ TON	$0
IMPROVED SUBGRADE:	Modified Soil	0	SQ YD	*		/ SQ YD	$0
SUBBASE GRANULAR MATERIAL, TYPE A, 10"		76,545	SQ YD	*	$12.65	/ SQ YD	$968,294
SUBBASE GRANULAR MATERIAL, TYPE A, 4"		39,321	SQ YD	*	$5.65	/ SQ YD	$222,164
PAVEMENT REMOVAL		0	SQ YD	*		/ SQ YD	$0
SHOULDER REMOVAL		11,954	SQ YD	*	$7.82	/ SQ YD	$93,480

Note: * Denotes User Supplied Quantity

FLEXIBLE CONSTRUCTION INITIAL COST	$5,951,926
FLEXIBLE CONSTRUCTION ANNUAL COST PER MILE	$92,543

MAINTENANCE COSTS:

ITEM		THICKNESS	MATERIAL		UNIT COST	
ROUTINE MAINTENANCE ACTIVITY					$0.00	LANE-MILE / YEAR
HMA OVERLAY PVMT SURF		(2.00")	Surface Mix	2.00	$11.26	/ SQ YD
HMA OVERLAY PVMT		(3.75")		3.75	$19.18	/ SQ YD
HMA SURFACE MIX		(1.50")	Surface Mix	1.50	$8.43	/ SQ YD
HMA BINDER MIX		(2.25")	Top Binder Mix	2.25	$10.74	/ SQ YD
HMA OVERLAY SHLD	(Year 30)	(1.75")	Shoulder Mix	1.75	$8.20	/ SQ YD
HMA OVERLAY SHLD		(2.00")	Shoulder Mix	2.00	$9.37	/ SQ YD
MILLING (2.00 IN)				2.00	$3.00	/ SQ YD
PARTIAL DEPTH PVMT PATCH		(Mill & Fill Surf)	Surface Mix	2.00	$81.21	/ SQ YD
PARTIAL DEPTH SHLD PATCH		(Mill & Fill Surf)	Shoulder Mix	2.00	$79.37	/ SQ YD
PARTIAL DEPTH PVMT PATCH		(Mill & Fill +2.00")	Leveling Binder Mix	2.00	$70.00	/ SQ YD
PARTIAL DEPTH SHLD PATCH		(Mill & Fill +2.00")	Shoulder Mix	2.00	$79.37	/ SQ YD
LONGITUDINAL SHOULDER JOINT ROUT & SEAL					$2.00	/ LIN FT
CENTERLINE JOINT ROUT & SEAL					$2.00	/ LIN FT
RANDOM / THERMAL CRACK ROUT & SEAL		(100% Rehab = 110.00' / Station / Lane)			$2.00	/ LIN FT

FLEXIBLE TOTAL LIFE-CYCLE COST	$8,048,840
FLEXIBLE TOTAL ANNUAL COST PER MILE	$125,147

MAINTENANCE AND REHABILITATION ACTIVITY SCHEDULE

08/20/19

FULL-DEPTH HMA PAVEMENT
HMA OVERLAY OF RUBBLIZED PCC PAVEMENT
Figure 54-7.C
STANDARD DESIGN

MAINTENANCE COSTS:	ITEM	%	QUANTITY	UNIT	UNIT COST		COST	PRESENT WORTH
YEAR 5								
	LONG SHLD JT R&S	100.00%	55,400	LIN FT	$2.00		$110,800	
	CNTR LINE JOINT R&S	100.00%	27,700	LIN FT	$2.00		$55,400	
	RNDM / THRM CRACK R&S	50.00%	45,705	LIN FT	$2.00		$91,410	
	PD PVMT PATCH M&F SURF	0.10%	36	SQ YD	$81.21		$2,923	
	PWFn =	0.8626		PW =	0.8626	X	$260,533	$224,738
YEAR 10								
	LONG SHLD JT R&S	100.00%	55,400	LIN FT	$2.00		$110,800	
	CNTR LINE JOINT R&S	100.00%	27,700	LIN FT	$2.00		$55,400	
	RNDM / THRM CRACK R&S	50.00%	45,705	LIN FT	$2.00		$91,410	
	PD PVMT PATCH M&F SURF	0.50%	181	SQ YD	$81.21		$14,698	
	PWFn =	0.7441		PW =	0.7441	X	$272,308	$202,623
YEAR 15								
	MILL PVMT & SHLD 2.00"	100.00%	80,813	SQ YD	$3.00		$242,439	
	PD PVMT PATCH M&F ADD'L 2.00"	1.00%	363	SQ YD	$70.00		$25,410	
	HMA OVERLAY PVMT 2.00"	100.00%	36,284	SQ YD	$11.26		$408,466	
	HMA OVERLAY SHLD 2.00 "	100.00%	44,529	SQ YD	$9.37		$417,084	
	PWFn =	0.6419		PW =	0.6419	X	$1,093,399	$701,811
YEAR 20								
	LONG SHLD JT R&S	100.00%	55,400	LIN FT	$2.00		$110,800	
	CNTR LINE JOINT R&S	100.00%	27,700	LIN FT	$2.00		$55,400	
	RNDM / THRM CRACK R&S	50.00%	45,705	LIN FT	$2.00		$91,410	
	PD PVMT PATCH M&F SURF	0.10%	36	SQ YD	$81.21		$2,923	
	PWFn =	0.5537		PW =	0.5537	X	$260,533	$144,251
YEAR 25								
	LONG SHLD JT R&S	100.00%	55,400	LIN FT	$2.00		$110,800	
	CNTR LINE JOINT R&S	100.00%	27,700	LIN FT	$2.00		$55,400	
	RNDM / THRM CRACK R&S	50.00%	45,705	LIN FT	$2.00		$91,410	
	PD PVMT PATCH M&F SURF	0.50%	181	SQ YD	$81.21		$14,698	
	PWFn =	0.4776		PW =	0.4776	X	$272,308	$130,056
	HMA_SD							
YEAR 30	INTERSTATE							
	MILL PVMT ONLY 2.00"	100.00%	36,284	SQ YD	$3.00		$108,852	
	PD PVMT PATCH M&F ADD'L 2.00"	2.00%	726	SQ YD	$70.00		$50,820	
	PD SHLD PATCH M&F SURF 2.00"	1.00%	445	SQ YD	$79.37		$35,318	
	HMA OVERLAY PVMT 3.75 "	100.00%	36,284	SQ YD	$19.18		$695,851	
	HMA OVERLAY SHLD 1.75 "	100.00%	44,529	SQ YD	$8.20		$364,948	
	PWFn =	0.4120		PW =	0.4120	X	$1,255,789	$517,368
YEAR 35								
	LONG SHLD JT R&S	100.00%	55,400	LIN FT	$2.00		$110,800	
	CNTR LINE JOINT R&S	100.00%	27,700	LIN FT	$2.00		$55,400	
	RNDM / THRM CRACK R&S	50.00%	45,705	LIN FT	$2.00		$91,410	
	PD PVMT PATCH M&F SURF	0.10%	36	SQ YD	$81.21		$2,923	
	PWFn =	0.3554		PW =	0.3554	X	$260,533	$92,589
YEAR 40								
	LONG SHLD JT R&S	100.00%	55,400	LIN FT	$2.00		$110,800	
	CNTR LINE JOINT R&S	100.00%	27,700	LIN FT	$2.00		$55,400	
	RNDM / THRM CRACK R&S	50.00%	45,705	LIN FT	$2.00		$91,410	
	PD PVMT PATCH M&F SURF	0.50%	181	SQ YD	$81.21		$14,698	
	PWFn =	0.3066		PW =	0.3066	X	$272,308	$83,478
								$2,096,914
	ROUTINE MAINTENANCE ACTIVITY		15.74	Lane Miles	0.00		$0	$0
					MAINTENANCE LIFE-CYCLE COST			$2,096,914
45	YEAR LIFE CYCLE	CRFn = 0.0407852			MAINTENANCE ANNUAL COST PER MILE			$32,604

PCC PAVEMENT

JPCP

ROUTE	I-57 (FAI 57)
SECTION	(28-5,-2,-3,-4,-5)R-2;28-5(B-2)
COUNTY	Franklin
LOCATION	I-57 Country Club Rd to MP 66
FACILITY TYPE	INTERSTATE

PROJECT LENGTH			13850 FT	= = >	2.62 Miles
# OF CENTERLINES			2 CL		
# OF LANES			6 LANES		
# OF EDGES			4 EP		
LANE WIDTH - AVERAGE			12 FT		
SHOULDER WIDTH	PCC	Inside	11.5 FT		
	PCC	Outside	10 FT		
	Total Width of Paved Shoulders		43 FT		

PAVEMENT THICKNESS (RIGID)	JPCP	10.50 IN	UNTIED SHLD
SHOULDER THICKNESS		10.50 IN	

POLICY OVERLAY THICKNESS	3.75 IN

RIGID PAVEMENT TRAFFIC FACTORS	MINIMUM	ACTUAL	USE
	2.23	16.94	16.94
Worksheet Construction Type is New Construction		The Pavement Type is	JPCP

INITIAL COSTS

ITEM	THICKNESS	100% QUANTITY	UNIT		UNIT PRICE		COST
JPC PAVEMENT	(10.50")	36,284	SQ YD	*	$55.77	/ SQ YD	$2,023,559
PAVEMENT REINFORCEMENT		0	SQ YD	*		/ SQ YD	$0
STABILIZED SUBBASE	(4.00")	73,156	SQ YD	*	$27.43	/ SQ YD	$2,006,669
PCC SHOULDERS		39,200	SQ YD	*	$54.40	/ SQ YD	$2,132,480
CURB & GUTTER		0	LIN FT	*		/ LIN FT	$0
SUBBASE GRAN MATL TY C	(~ 3.23")	0	TONS	*		/ TON	$0
IMPROVED SUBGRADE:	Modified Soil Width = 0.0'	0	SQ YD	*		/ SQ YD	$0
SUBBASE GRANULAR MATERIAL, TYPE A, 10"		76,545	SQ YD	*	$12.65	/ SQ YD	$968,294
		0	SQ YD	*		/ SQ YD	$0
PAVEMENT REMOVAL		0	SQ YD	*		/ SQ YD	$0
SHOULDER REMOVAL		11,954	SQ YD	*	$7.82	/ SQ YD	$93,480

Note: * Denotes User Supplied Quantity

RIGID CONSTRUCTION INITIAL COST	$7,224,482
RIGID CONSTRUCTION ANNUAL COST PER MILE	$112,329

MAINTENANCE COSTS:

ITEM	THICKNESS	MATERIAL		UNIT COST	
ROUTINE MAINTENANCE ACTIVITY				$0.00	/ LANE-MILE / YEAR
HMA POLICY OVERLAY	(3.75")		3.75		
HMA POLICY OVERLAY PVMT	(3.75")	1.0087	3.75	$19.18	/ SQ YD
HMA SURFACE MIX	(1.50")	1.0035 Surface Mix	1.50	$8.43	/ SQ YD
HMA BINDER MIX	(2.25")	1.0122 Top Binder Mix	2.25	$10.74	/ SQ YD
HMA POLICY OVERLAY SHLD	(3.75")	Shoulder Mix	3.75	$17.56	/ SQ YD
CLASS A PAVEMENT PATCHING				$195.00	/ SQ YD
CLASS B PAVEMENT PATCHING				$150.00	/ SQ YD
CLASS C SHOULDER PATCHING				$145.00	/ SQ YD
PARTIAL DEPTH PVMT PATCH (Mill & Fill HMA Surf)		Surface Mix	1.50	$78.40	/ SQ YD
PARTIAL DEPTH PVMT PATCH (Mill & Fill HMA 1.50")		Surface Mix	1.50	$78.40	/ SQ YD
LONGITUDINAL SHOULDER JOINT ROUT & SEAL				$2.00	/ LIN FT
CENTERLINE JOINT ROUT & SEAL				$2.00	/ LIN FT
REFLECTIVE TRANSVERSE CRACK ROUT & SEAL				$2.00	/ LIN FT
RANDOM CRACK ROUT & SEAL	(100% Rehab = 100.00' / Station / Lane)			$2.00	/ LIN FT

RIGID TOTAL LIFE-CYCLE COST	$8,464,446
RIGID TOTAL ANNUAL COST PER MILE	$131,609

JOINTED PLAIN CONCRETE PAVEMENT
UNBONDED JOINTED PLAIN CONCRETE OVERLAY
Figure 54-7.A

MAINTENANCE COSTS	ITEM	%	QUANTITY	UNIT	UNIT COST		COST	PRESENT WORTH
YEAR 10								
	PAVEMENT PATCH CLASS B	0.10%	36	SQ YD	$150.00		$5,400	
	PWFn =	0.7441		PW =	0.7441	X	$5,400	$4,018
YEAR 15								
	PAVEMENT PATCH CLASS B	0.20%	73	SQ YD	$150.00		$10,950	
	PWFn =	0.6419		PW =	0.6419	X	$10,950	$7,028
YEAR 20								
	PAVEMENT PATCH CLASS B	2.00%	726	SQ YD	$150.00		$108,900	
	SHOULDER PATCH CLASS C	0.50%	196	SQ YD	$145.00		$28,420	
	LONGITUDINAL SHLD JT R&S	100.00%	55,400	LIN FT	$2.00		$110,800	
	CENTERLINE JT R&S	100.00%	27,700	LIN FT	$2.00		$55,400	
	PWFn =	0.5537		PW =	0.5537	X	$303,520	$168,052
YEAR 25								
	PAVEMENT PATCH CLASS B	3.00%	1,089	SQ YD	$150.00		$163,350	
	SHOULDER PATCH CLASS C	1.00%	392	SQ YD	$145.00		$56,840	
	PWFn =	0.4776		PW =	0.4776	X	$220,190	$105,164
YEAR 30	INTERSTATE							
	PAVEMENT PATCH CLASS B	4.00%	1,451	SQ YD	$150.00		$217,650	
	SHOULDER PATCH CLASS C	1.50%	588	SQ YD	$145.00		$85,260	
	HMA POLICY OVERLAY 3.75" (PVMT)	100.00%	36,284	SQ YD	$19.18		$695,851	
	HMA POLICY OVERLAY 3.75" (SHLD)	100.00%	44,529	SQ YD	$17.56		$782,032	
	PWFn =	0.4120		PW =	0.4120	X	$1,780,793	$733,663
YEAR 35	INTERSTATE							
	LONGITUDINAL SHLD JT R&S	100.00%	55,400	LIN FT	$2.00		$110,800	
	CENTERLINE JT R&S	100.00%	27,700	LIN FT	$2.00		$55,400	
	RANDOM CRACK R&S	50.00%	41,550	LIN FT	$2.00		$83,100	
	REFLECTIVE TRANSVERSE CRACK R&S	40.00%	26,582	LIN FT	$2.00		$53,164	
	PD PVMT PATCH M&F HMA SURF 1.50"	0.10%	36	SQ YD	$78.40		$2,823	
	PWFn =	0.3554		PW =	0.3554	X	$305,287	$108,494
YEAR 40	INTERSTATE							
	PAVEMENT PATCH CLASS B	0.50%	181	SQ YD	$150.00		$27,150	
	LONGITUDINAL SHLD JT R&S	100.00%	55,400	LIN FT	$2.00		$110,800	
	CENTERLINE JT R&S	100.00%	27,700	LIN FT	$2.00		$55,400	
	REFLECTIVE TRANSVERSE CRACK R&S	60.00%	39,874	LIN FT	$2.00		$79,748	
	RANDOM CRACK R&S	50.00%	41,550	LIN FT	$2.00		$83,100	
	PD PVMT PATCH M&F HMA SURF 1.50"	0.50%	181	SQ YD	$78.40		$14,191	
	PWFn =	0.3066		PW =	0.3066	X	$370,389	$113,545
								$1,239,964
	ROUTINE MAINTENANCE ACTIVITY		15.74	Lane Miles	$0.00		$0	$0
					MAINTENANCE LIFE-CYCLE COST			$1,239,964
45	YEAR LIFE CYCLE	CRFn = 0.0407852			MAINTENANCE ANNUAL COST PER MILE			$19,279

LIFE-CYCLE COST ANALYSIS: NEW DESIGN

Calculated / Revised : 7/11/19 11:32 AM

			JPCP	HMA
CONSTRUCTION	INITIAL COST	PRESENT WORTH	$7,224,482	$5,951,926
		ANNUAL COST PER MILE	$112,329	$92,543
MAINTENANCE	LIFE-CYCLE COST	PRESENT WORTH	$1,239,964	$2,096,914
		ANNUAL COST PER MILE	$19,279	$32,604
TOTAL	LIFE-CYCLE COST	PRESENT WORTH	$8,464,446	$8,048,840
		ANNUAL COST PER MILE	$131,609	$125,147

LIFE-CYCLE COST ANALYSIS: FINAL SUMMARY

LOWEST COST OPTION	==========>	HMA	$125,147	
OTHER OPTIONS (LOWEST TO HIGHEST):	TYPE / PERCENTAGE	JPCP	$131,609	5.2%

C:\Users\PRITCHETTLL\AppData\Roaming\Microsoft\Excel\[LCCA_78631_AddLane_ (version 2).xlsb]LifeCycleCost

LIFE-CYCLE COST ANALYSIS: NEW CONSTRUCTION / RECONSTRUCTION

FULL-DEPTH HMA PAVEMENT

LSC Design

ROUTE	I-57 (FAI 57)
SECTION	(28-5,-2,-3,-4,-5)R-2;28-5(B-2)
COUNTY	Franklin
LOCATION	I-57 Country Club Rd to MP 66

FACILITY TYPE INTERSTATE

PROJECT LENGTH		3046 FT	= = >	0.58 Miles
# OF CENTERLINES		2 CL		
# OF LANES		4 LANES		
# OF EDGES		4 EP		
LANE WIDTH - AVERAGE		12 FT		
SHOULDER WIDTH	HMA Inside	6 FT		
	HMA Outside	10 FT		
	Total Width of Paved Shoulders	32 FT		

PAVEMENT THICKNESS (FLEXIBLE)	16.75 IN	16.75 IN MAX
SHOULDER THICKNESS	10.00 IN	HMA LSCD LSC Design
POLICY OVERLAY THICKNESS	2.00 IN	

FLEX PAVEMENT TRAFFIC FACTORS	MINIMUM	ACTUAL	USE
	7.11	53.30	53.30

Read Me!

HMA COST PER TON	UNIT PRICE
HMA SURFACE	$100.05 / TON
HMA TOP BINDER	$84.25 / TON
HMA LOWER BINDER	$77.16 / TON
HMA BINDER (LEVELING)	$0.00 / TON
HMA SHOULDER	$83.63 / TON

INITIAL COSTS

ITEM	THICKNESS	100% QUANTITY	UNIT		UNIT PRICE		COST	
HMA PAVEMENT (FULL-DEPTH)	(16.75")	17,159	SQ YD	*	$94.09	/ SQ YD	$1,614,490	-
HMA SURFACE COURSE	(2.00")	1,924	TONS	*	$100.05	/ TON	$0	
HMA TOP BINDER COURSE	(2.25")	2,174	TONS	*	$84.25	/ TON	$0	
HMA LOWER BINDER COURSE	(12.50")	12,255	TONS	*	$77.16	/ TON	$0	
HMA SHOULDER	(10.00")	5,156	SQ YD	*	$46.83	/ SQ YD	$241,455	-
CURB & GUTTER		0	LIN FT	*		/ LIN FT	$0	
SUBBASE GRAN MATL TY C (TONS)		0	TONS	*		/ TON	$0	
IMPROVED SUBGRADE:	Modified Soil	0	SQ YD	*		/ SQ YD	$0	
SUBBASE GRANULAR MATERIAL, TYPE A, 10"		17,159	SQ YD	*	$12.65	/ SQ YD	$217,061	
		0					$0	
PAVEMENT REMOVAL		17,788	SQ YD	*	$13.69	/ SQ YD	$243,518	
SHOULDER REMOVAL		9,097	SQ YD	*	$7.82	/ SQ YD	$71,139	

Note: * Denotes User Supplied Quantity

FLEXIBLE CONSTRUCTION INITIAL COST	$2,387,663
FLEXIBLE CONSTRUCTION ANNUAL COST PER MILE	$168,803

MAINTENANCE COSTS:

ITEM	THICKNESS	MATERIAL	UNIT COST	
ROUTINE MAINTENANCE ACTIVITY			$0.00	LANE-MILE / YEAR
HMA OVERLAY PVMT SURF	(2.00")	Surface Mix	$11.28	/ SQ YD
HMA OVERLAY PVMT	(2.00")		$11.28	/ SQ YD
HMA SURFACE MIX	(2.00")	Surface Mix	$11.28	/ SQ YD
HMA BINDER MIX	(0.00")	ling Binder Mix	$0.00	/ SQ YD
HMA OVERLAY SHLD (Year 30)	(2.00")	Shoulder Mix	$9.37	/ SQ YD
HMA OVERLAY SHLD	(2.00")	Shoulder Mix	$9.37	/ SQ YD
MILLING (2.00 IN)			$3.00	/ SQ YD
PARTIAL DEPTH PVMT PATCH	(Mill & Fill Surf)	Surface Mix	$81.21	/ SQ YD
PARTIAL DEPTH SHLD PATCH	(Mill & Fill Surf)	Shoulder Mix	$79.37	/ SQ YD
PARTIAL DEPTH PVMT PATCH	(Mill & Fill +2.00 ")	Leveling Binder Mix	$70.00	/ SQ YD
PARTIAL DEPTH SHLD PATCH	(Mill & Fill +2.00 ")	Shoulder Mix	$79.37	/ SQ YD
LONGITUDINAL SHOULDER JOINT ROUT & SEAL			$2.00	/ LIN FT
CENTERLINE JOINT ROUT & SEAL			$2.00	/ LIN FT
RANDOM / THERMAL CRACK ROUT & SEAL	(100% Rehab = 110.00' / Station / Lane)		$2.00	/ LIN FT

FLEXIBLE TOTAL LIFE-CYCLE COST	$2,910,428
FLEXIBLE TOTAL ANNUAL COST PER MILE	$205,761

MAINTENANCE AND REHABILITATION ACTIVITY SCHEDULE

08/20/19

FULL-DEPTH HMA PAVEMENT
HMA OVERLAY OF RUBBLIZED PCC PAVEMENT
Figure 54-7.C
LIMITING STRAIN CRITERION DESIGN

MAINTENANCE COSTS:	ITEM	%	QUANTITY	UNIT	UNIT COST		COST	PRESENT WORTH
YEAR 5								
	LONG SHLD JT R&S	100.00%	12,184	LIN FT	$2.00		$24,368	
	CNTR LINE JOINT R&S	100.00%	6,092	LIN FT	$2.00		$12,184	
	RNDM / THRM CRACK R&S	50.00%	6,701	LIN FT	$2.00		$13,402	
	PD PVMT PATCH M&F SURF	0.10%	17	SQ YD	$81.21		$1,380	
	PWFn =	0.8626		PW =	0.8626	X	$51,334	$44,281
YEAR 10								
	LONG SHLD JT R&S	100.00%	12,184	LIN FT	$2.00		$24,368	
	CNTR LINE JOINT R&S	100.00%	6,092	LIN FT	$2.00		$12,184	
	RNDM / THRM CRACK R&S	50.00%	6,701	LIN FT	$2.00		$13,402	
	PD PVMT PATCH M&F SURF	0.50%	86	SQ YD	$81.21		$6,984	
	PWFn =	0.7441		PW =	0.7441	X	$56,938	$42,367
YEAR 15								
	MILL PVMT & SHLD 2.00"	100.00%	22,315	SQ YD	$3.00		$66,945	
	PD PVMT PATCH M&F ADD'L 2.00"	1.00%	172	SQ YD	$70.00		$12,040	
	HMA OVERLAY PVMT 2.00"	100.00%	17,159	SQ YD	$11.28		$193,612	
	HMA OVERLAY SHLD 2.00 "	100.00%	5,156	SQ YD	$9.37		$48,294	
	PWFn =	0.6419		PW =	0.6419	X	$320,891	$205,968
YEAR 20								
	LONG SHLD JT R&S	100.00%	12,184	LIN FT	$2.00		$24,368	
	CNTR LINE JOINT R&S	100.00%	6,092	LIN FT	$2.00		$12,184	
	RNDM / THRM CRACK R&S	50.00%	6,701	LIN FT	$2.00		$13,402	
	PD PVMT PATCH M&F SURF	0.10%	17	SQ YD	$81.21		$1,380	
	PWFn =	0.5537		PW =	0.5537	X	$51,334	$28,422
YEAR 25								
	LONG SHLD JT R&S	100.00%	12,184	LIN FT	$2.00		$24,368	
	CNTR LINE JOINT R&S	100.00%	6,092	LIN FT	$2.00		$12,184	
	RNDM / THRM CRACK R&S	50.00%	6,701	LIN FT	$2.00		$13,402	
	PD PVMT PATCH M&F SURF	0.50%	86	SQ YD	$81.21		$6,984	
	PWFn =	0.4776		PW =	0.4776	X	$56,938	$27,194
	HMA_LSCD							
YEAR 30	INTERSTATE							
	MILL PVMT & SHLD 2.00"	100.00%	22,315	SQ YD	$3.00		$66,945	
	PD PVMT PATCH M&F ADD'L 2.00"	2.00%	343	SQ YD	$70.00		$24,010	
	PD SHLD PATCH M&F ADD'L 2.00"	1.00%	52	SQ YD	$79.37		$4,127	
	HMA OVERLAY PVMT 2.00"	100.00%	17,159	SQ YD	$11.28		$193,612	
	HMA OVERLAY SHLD 2.00 "	100.00%	5,156	SQ YD	$9.37		$48,294	
	PWFn =	0.4120		PW =	0.4120	X	$336,988	$138,835
YEAR 35								
	LONG SHLD JT R&S	100.00%	12,184	LIN FT	$2.00		$24,368	
	CNTR LINE JOINT R&S	100.00%	6,092	LIN FT	$2.00		$12,184	
	RNDM / THRM CRACK R&S	50.00%	6,701	LIN FT	$2.00		$13,402	
	PD PVMT PATCH M&F SURF	0.10%	17	SQ YD	$81.21		$1,380	
	PWFn =	0.3554		PW =	0.3554	X	$51,334	$18,243
YEAR 40								
	LONG SHLD JT R&S	100.00%	12,184	LIN FT	$2.00		$24,368	
	CNTR LINE JOINT R&S	100.00%	6,092	LIN FT	$2.00		$12,184	
	RNDM / THRM CRACK R&S	50.00%	6,701	LIN FT	$2.00		$13,402	
	PD PVMT PATCH M&F SURF	0.50%	86	SQ YD	$81.21		$6,984	
	PWFn =	0.3066		PW =	0.3066	X	$56,938	$17,455
								$522,765
	ROUTINE MAINTENANCE ACTIVITY		2.31	Lane Miles	0.00		0	$0
					MAINTENANCE LIFE-CYCLE COST			$522,765
45	YEAR LIFE CYCLE	CRFn = 0.0407852			MAINTENANCE ANNUAL COST PER MILE			$36,958

PCC PAVEMENT

JPCP

ROUTE	I-57 (FAI 57)
SECTION	(28-5,-2,-3,-4,-5)R-2;28-5(B-2)
COUNTY	Franklin
LOCATION	I-57 Country Club Rd to MP 66
FACILITY TYPE	INTERSTATE

PROJECT LENGTH		3046 FT	= = >	0.58 Miles
# OF CENTERLINES		2 CL		
# OF LANES		4 LANES		
# OF EDGES		4 EP		
LANE WIDTH - AVERAGE		12 FT		
SHOULDER WIDTH	PCC Inside	6 FT		
	PCC Outside	10 FT		
	Total Width of Paved Shoulders	32 FT		

PAVEMENT THICKNESS (RIGID)	JPCP	11.50 IN	TIED SHLD
SHOULDER THICKNESS		11.50 IN	
POLICY OVERLAY THICKNESS		3.75 IN	

RIGID PAVEMENT TRAFFIC FACTORS	MINIMUM	ACTUAL	USE
	10.05	76.11	76.11
Worksheet Construction Type is New Construction		The Pavement Type is	JPCP

INITIAL COSTS

ITEM	THICKNESS	100% QUANTITY	UNIT		UNIT PRICE		COST
JPC PAVEMENT	(11.50")	17,159	SQ YD	*	$74.14	/ SQ YD	$1,272,168
PAVEMENT REINFORCEMENT		0	SQ YD	*		/ SQ YD	$0
STABILIZED SUBBASE	(4.00")	17,159	SQ YD	*	$27.43	/ SQ YD	$470,671
PCC SHOULDERS		5,957	SQ YD	*	$75.55	/ SQ YD	$450,051
CURB & GUTTER		0	LIN FT	*		/ LIN FT	$0
SUBBASE GRAN MATL TY C	(3.48")	0	TONS	*		/ TON	$0
IMPROVED SUBGRADE:	Modified Soil Width = 0.0'	0	SQ YD	*		/ SQ YD	$0
SUBBASE GRANULAR MATERIAL, TYPE A, 10"		17,159	SQ YD	*	$12.65	/ SQ YD	$217,061
		0	SQ YD	*		/ SQ YD	$0
PAVEMENT REMOVAL		17,788	SQ YD	*	$13.69	/ SQ YD	$243,518
SHOULDER REMOVAL		9,097	SQ YD	*	$7.82	/ SQ YD	$71,139

Note: * Denotes User Supplied Quantity

RIGID CONSTRUCTION INITIAL COST	$2,724,608
RIGID CONSTRUCTION ANNUAL COST PER MILE	$192,624

MAINTENANCE COSTS:

ITEM	THICKNESS		MATERIAL		UNIT COST	
ROUTINE MAINTENANCE ACTIVITY					$0.00	/ LANE-MILE / YEAR
HMA POLICY OVERLAY	(3.75")			3.75		
HMA POLICY OVERLAY PVMT	(3.75")	1.0130		3.75	$19.26	/ SQ YD
HMA SURFACE MIX	(1.50")	1.0052	Surface Mix	1.50	$8.45	/ SQ YD
HMA BINDER MIX	(2.25")	1.0182	Top Binder Mix	2.25	$10.81	/ SQ YD
HMA POLICY OVERLAY SHLD	(3.75")		Shoulder Mix	3.75	$17.56	/ SQ YD
CLASS A PAVEMENT PATCHING					$195.00	/ SQ YD
CLASS B PAVEMENT PATCHING					$150.00	/ SQ YD
CLASS C SHOULDER PATCHING					$145.00	/ SQ YD
PARTIAL DEPTH PVMT PATCH (Mill & Fill HMA Surf)			Surface Mix	1.50	$78.40	/ SQ YD
PARTIAL DEPTH PVMT PATCH (Mill & Fill HMA 1.50")			Surface Mix	1.50	$78.40	/ SQ YD
LONGITUDINAL SHOULDER JOINT ROUT & SEAL					$2.00	/ LIN FT
CENTERLINE JOINT ROUT & SEAL					$2.00	/ LIN FT
REFLECTIVE TRANSVERSE CRACK ROUT & SEAL					$2.00	/ LIN FT
RANDOM CRACK ROUT & SEAL	(100% Rehab = 100.00' / Station / Lane)				$2.00	/ LIN FT

RIGID TOTAL LIFE-CYCLE COST	$3,088,220
RIGID TOTAL ANNUAL COST PER MILE	$218,331

MAINTENANCE AND REHABILITATION ACTIVITY SCHEDULE

08/20/19

JOINTED PLAIN CONCRETE PAVEMENT
UNBONDED JOINTED PLAIN CONCRETE OVERLAY
Figure 54-7.A

MAINTENANCE COSTS:	ITEM	%	QUANTITY	UNIT	UNIT COST		COST	PRESENT WORTH
YEAR 10								
	PAVEMENT PATCH CLASS B	0.10%	17	SQ YD	$150.00		$2,550	
	PWFn =	0.7441		PW =	0.7441	X	$2,550	$1,897
YEAR 15								
	PAVEMENT PATCH CLASS B	0.20%	34	SQ YD	$150.00		$5,100	
	PWFn =	0.6419		PW =	0.6419	X	$5,100	$3,273
YEAR 20								
	PAVEMENT PATCH CLASS B	2.00%	343	SQ YD	$150.00		$51,450	
	SHOULDER PATCH CLASS C	0.50%	30	SQ YD	$145.00		$4,350	
	LONGITUDINAL SHLD JT R&S	100.00%	12,184	LIN FT	$2.00		$24,368	
	CENTERLINE JT R&S	100.00%	6,092	LIN FT	$2.00		$12,184	
	PWFn =	0.5537		PW =	0.5537	X	$92,352	$51,133
YEAR 25								
	PAVEMENT PATCH CLASS B	3.00%	515	SQ YD	$150.00		$77,250	
	SHOULDER PATCH CLASS C	1.00%	60	SQ YD	$145.00		$8,700	
	PWFn =	0.4776		PW =	0.4776	X	$85,950	$41,050
YEAR 30	INTERSTATE							
	PAVEMENT PATCH CLASS B	4.00%	686	SQ YD	$150.00		$102,900	
	SHOULDER PATCH CLASS C	1.50%	89	SQ YD	$145.00		$12,905	
	HMA POLICY OVERLAY 3.75" (PVMT)	100.00%	17,159	SQ YD	$19.26		$330,431	
	HMA POLICY OVERLAY 3.75" (SHLD)	100.00%	5,156	SQ YD	$17.56		$90,551	
	PWFn =	0.4120		PW =	0.4120	X	$536,787	$221,149
YEAR 35	INTERSTATE							
	LONGITUDINAL SHLD JT R&S	100.00%	12,184	LIN FT	$2.00		$24,368	
	CENTERLINE JT R&S	100.00%	6,092	LIN FT	$2.00		$12,184	
	RANDOM CRACK R&S	50.00%	6,092	LIN FT	$2.00		$12,184	
	REFLECTIVE TRANSVERSE CRACK R&S	40.00%	3,898	LIN FT	$2.00		$7,796	
	PD PVMT PATCH M&F HMA SURF 1.50"	0.10%	17	SQ YD	$78.40		$1,333	
	PWFn =	0.3554		PW =	0.3554	X	$57,865	$20,564
YEAR 40	INTERSTATE							
	PAVEMENT PATCH CLASS B	0.50%	86	SQ YD	$150.00		$12,900	
	LONGITUDINAL SHLD JT R&S	100.00%	12,184	LIN FT	$2.00		$24,368	
	CENTERLINE JT R&S	100.00%	6,092	LIN FT	$2.00		$12,184	
	REFLECTIVE TRANSVERSE CRACK R&S	60.00%	5,846	LIN FT	$2.00		$11,692	
	RANDOM CRACK R&S	50.00%	6,092	LIN FT	$2.00		$12,184	
	PD PVMT PATCH M&F HMA SURF 1.50"	0.50%	86	SQ YD	$78.40		$6,743	
	PWFn =	0.3066		PW =	0.3066	X	$80,071	$24,546
								$363,612
	ROUTINE MAINTENANCE ACTIVITY		2.31	Lane Miles	$0.00		$0	$0
					MAINTENANCE LIFE-CYCLE COST			$363,612
45	YEAR LIFE CYCLE	CRFn = 0.0407852			MAINTENANCE ANNUAL COST PER MILE			$25,707

LIFE-CYCLE COST ANALYSIS: NEW DESIGN

Calculated / Revised : 7/11/19 11:44 AM

			JPCP	HMA
CONSTRUCTION	INITIAL COST	PRESENT WORTH	$2,724,608	$2,387,663
		ANNUAL COST PER MILE	$192,624	$168,803
MAINTENANCE	LIFE-CYCLE COST	PRESENT WORTH	$363,612	$522,765
		ANNUAL COST PER MILE	$25,707	$36,958
TOTAL	LIFE-CYCLE COST	PRESENT WORTH	$3,088,220	$2,910,428
		ANNUAL COST PER MILE	$218,331	$205,761

LIFE-CYCLE COST ANALYSIS: FINAL SUMMARY

LOWEST COST OPTION	==========>	HMA	$205,761	
OTHER OPTIONS (LOWEST TO HIGHEST):	TYPE / PERCENTAGE	JPCP	$218,331	6.1%

C:\Users\PRITCHETTLL\AppData\Roaming\Microsoft\Excel\[LCCA_78631_UnderBridge_ (version 2).xlsb]LifeCycleCost

BDE 5401 Template (Rev. 09/05/2013)

IDOT MECHANISTIC PAVEMENT DESIGN

Printed: 07/24/2019

PROJECT AND TRAFFIC INPUTS

(Enter Data in Gray Shaded Cells)

Route: I-57 (FAI 57)
Section: (28-5,-2,-3,-4,-5)R-2;28-5(B-2)
County: Franklin
Location: I-57 Country Club Rd to MP 66

Comments:

Design Date: 07/10/2019 LLP <-- BY
Modify Date: <-- BY

	ADT	Year
Current:	-	-
Future:	-	-

Facility Type: Interstate or Freeway

# of Lanes = 4

Road Class: I

Subgrade Support Rating (SSR): Poor
Construction Year: 2020
Design Period (DP) = 20 years

	Minimum ADT	Structural Design Traffic: Actual ADT	Actual %of Total ADT	% of ADT in Design Lane	
PV =	0	40,450	74.8%	P =	32%
SU =	500	1,870	3.5%	S =	45%
MU =	1500	11,750	21.7%	M =	45%
Struct. Design ADT =		54,070	(2030)		

TRAFFIC FACTOR CALCULATION

FLEXIBLE PAVEMENT

Cpv =	0.15	
Csu =	132.5	
Cmu =	482.53	
TF flexible (Actual) =	53.30	(Actual ADT)
TF flexible (Min) =	7.11	(Min ADT Fig. 54-2.C)

RIGID PAVEMENT

Cpv =	0.15	
Csu =	143.81	
Cmu =	696.42	
TF rigid (Actual) =	76.11	(Actual ADT)
TF rigid (Min) =	10.05	(Min ADT Fig. 54-2.C)

NEW CONSTRUCTION / RECONSTRUCTION PAVEMENT DESIGN CALCULATIONS

Full-Depth HMA Pavement

Goto Map

Use TF flexible =	53.30	
PG Grade Lower Binder Lifts =	PG 64-22	(Fig. 53-4.R)
HMA Mixture Temp. =	80.0	deg. F (Fig. 54-5.C)
Design HMA Mixture Modulus (E_{HMA}) =	560	ksi (Fig. 54-5.D)
Design HMA Strain (ε_{HMA}) =	39	(Fig. 54-5.E)
Full Depth HMA Design Thickness =	18.25	in. (Fig. 54-5.F)
Limiting Strain Criterion Thickness =	16.75	in. (Fig. 54-5.I)
Use Full-Depth HMA Thickness =	**16.75**	**inches**

JPC Pavement

Use TF rigid =	76.11	
Edge Support =	Tied	Shoulder or C.&G.
Rigid Pavt Thick. =	**11.50**	**in. (Fig. 54-4.E)**

CRC Pavement

Use TF rigid =	76.11	
IBR value =	2	
CRCP Thickness =	**12.00**	**in. (Fig. 54-4.M)**

RECONSTRUCTION ONLY (SUPPLEMENTAL) PAVEMENT DESIGN CALCULATIONS

HMA Overlay of Rubblized PCC

Goto Map

Use TF flexible =	53.30	
HMA Overlay Design Thickness =	15.00	in. (Fig. 54-5.U)
Limiting Strain Criterion Thickness =	11.75	in. (Fig. 54-5.V)
Use HMA Overlay Thickness =	**11.75**	**Inches**

Unbonded Concrete Overlay

Review 54-4.03 for limitations and special considerations.

CRCP Thickness =	**11.00**	**Inches**

DESIGN TABLES FROM BDE MANUAL CHAPTER 54 - PAVEMENT DESIGN

Class I Roads	Class II Roads	Class III Roads	Class IV Roads
4 lanes or more Part of a future 4 lanes or more One-way Streets with ADT > 3500	2 lanes with ADT > 2000 One way Street with ADT <= 3500	2 Lanes (ADT 750 -2000)	2 Lanes (ADT < 750)

Facility Type	Min. Str. Design Traffic (Fig 54-2.C): PV	SU	MU
Interstate or Freeway	0	500	1500
Other Marked State Route	0	250	750
Unmarked State Route	No Min	No Min	No Min

Class Table for One-Way Streets

ADT	Class
0 - 3500	II
>3501	I

Class	Traffic Factor ESAL Coefficients: Rigid (Fig. 54-4.C) Csu	Rigid Cmu	Flexible (Fig. 54-5.B) Csu	Flexible Cmu
I	143.81	696.42	132.50	482.53
II	135.78	567.21	112.06	385.44
III	129.58	562.47	109.14	384.35
IV	129.58	562.47	109.14	384.35

Class Table for 2 or 3 lanes (not future 4 lane & not one-way street)

ADT	Class
0 - 749	IV
750 - 2000	III
>2000	II

Number of Lanes	Design Lane Distribution Factors For Structural Design Traffic (Fig. 54-2.B): Rural P	Rural S	Rural M	Urban P	Urban S	Urban M
1 Lane Ramp	100%	100%	100%	100%	100%	100%
2 or 3	50%	50%	50%	50%	50%	50%
4	32%	45%	45%	32%	45%	45%
6 or more	20%	40%	40%	8%	37%	37%

LIFE-CYCLE COST ANALYSIS: NEW CONSTRUCTION / RECONSTRUCTION

FULL-DEPTH HMA PAVEMENT

LSC Design

ROUTE	I-57 (FAI 57)
SECTION	(20-6,-2,-3,-4,-4)R-3,20-6(B-2)
COUNTY	Franklin
LOCATION	I-57 Country Club Rd to MP 66
FACILITY TYPE	INTERSTATE

PROJECT LENGTH		3000 FT <=>	0.54 Miles	USER OVERRIDE COLUMN
# OF CENTERLINES		2 CL		
# OF LANES		4 LANES		
# OF EDGES		4 EP		
LANE WIDTH - AVERAGE		12 FT		
SHOULDER WIDTH	HMA Inside	6 FT		
	HMA Outside	10 FT		
	Total Width of Paved Shoulders	32 FT		

PAVEMENT THICKNESS (FLEXIBLE)	16.75 IN	16.75 IN MAX
SHOULDER THICKNESS	10.00 IN	LSC Design
POLICY OVERLAY THICKNESS	2.00 IN	

FLEX PAVEMENT TRAFFIC FACTORS	MINIMUM	ACTUAL	USE	On User Override
	7.91	[illegible]	43.30	

HMA COST PER TON	UNIT PRICE	Road Mix
HMA SURFACE	$100.00 / ton	
HMA TOP BINDER	$84.30 / ton	
HMA LOWER BINDER	$77.10 / ton	
HMA BINDER (LEVELING)	$0.00 / ton	
HMA SHOULDER	$63.63 / ton	

INITIAL COSTS

ITEM	THICKNESS	100% QUANTITY	UNIT	UNIT PRICE	COST	USER SUPPLIED QUANTITY	USER SUPPLIED UNIT PRICE
HMA PAVEMENT (FULL-DEPTH)	(16.75")	17,150	SQ YD	* $88.00 / SQ YD	$1,514,400	17,150	$88.00
HMA SURFACE COURSE	(2.00")	1,924	TONS	* $100.00 / TON	$0	1,924	
HMA TOP BINDER COURSE	(2.25")	2,174	TONS	* $84.30 / TON	$0	2,174	
HMA LOWER BINDER COURSE	(12.50")	12,256	TONS	* $77.10 / TON	$0	12,256	
HMA SHOULDER	(10.00")	5,156	SQ YD	* $46.83 / SQ YD	$241,455	5,156	$46.83
CURB & GUTTER		0	LIN FT	* / LIN FT	$0	0	
SUBBASE GRAN MATL TY C (TONS)		0	TONS	* / TON	$0	0	
IMPROVED SUBGRADE	Modified Soil	0	SQ YD	* / SQ YD	$0	0	
SUBBASE GRANULAR MATERIAL, TYPE A 12"		17,150	SQ YD	* $12.68 / SQ YD	$217,081	17,150	
		0			$0		
PAVEMENT REMOVAL		17,758	SQ YD	* $13.69 / SQ YD	$243,110	17,758	
SHOULDER REMOVAL		9,087	SQ YD	* $7.82 / SQ YD	$71,130	9,087	

Note: * Denotes User Supplied Quantity

FLEXIBLE CONSTRUCTION INITIAL COST $2,387,663
FLEXIBLE CONSTRUCTION ANNUAL COST PER MILE $168,603

MAINTENANCE COSTS

ITEM	THICKNESS	MATERIAL	UNIT COST	Schedule Quantity	Unit Cost Override
ROUTINE MAINTENANCE ACTIVITY			$0.00 / LANE MILE / YEAR		
HMA OVERLAY PVMT SURF	(2.00")	Surface Mix	$11.28 / SQ YD		
HMA OVERLAY PVMT	(2.00")		$11.28 / SQ YD		
HMA SURFACE MIX	(2.00")	Surface Mix	$11.28 / SQ YD		
HMA BINDER MIX	(0.00")	Top Binder Mix	$0.00 / SQ YD		
HMA OVERLAY SHLD (Year 30)	(2.00")	Shoulder Mix	$9.37 / SQ YD		
HMA OVERLAY SHLD	(2.00")	Shoulder Mix	$9.37 / SQ YD		
MILLING (2.00 IN)			$3.00 / SQ YD		
PARTIAL DEPTH PVMT PATCH	[illegible]	Surface Mix	$81.21 / SQ YD		
PARTIAL DEPTH SHLD PATCH	[illegible]	Shoulder Mix	$79.37 / SQ YD		
PARTIAL DEPTH PVMT PATCH	[illegible]	Leveling Binder Mix	$70.00 / SQ YD		
PARTIAL DEPTH SHLD PATCH	[illegible]	Shoulder Mix	$79.37 / SQ YD		
LONGITUDINAL SHOULDER JOINT ROUT & SEAL			$2.00 / LIN FT		
CENTERLINE JOINT ROUT & SEAL			$2.00 / LIN FT		
RANDOM / THERMAL CRACK ROUT & SEAL	[illegible]		$2.00 / LIN FT		

FLEXIBLE TOTAL LIFE-CYCLE COST $2,910,426
FLEXIBLE TOTAL ANNUAL COST PER MILE $205,761

MAINTENANCE AND REHABILITATION ACTIVITY SCHEDULE [illegible]

FULL-DEPTH HMA PAVEMENT
HMA OVERLAY OF RUBBLIZED PCC PAVEMENT
Figure 54-7.C
[illegible]

MAINTENANCE COSTS	ITEM	%	QUANTITY	UNIT	UNIT COST	COST	PRESENT WORTH
YEAR 5	LONG SHLD JT R&S	100.00%	12,194	LIN FT	$2.00	$24,388	
	CNTR LINE JOINT R&S	100.00%	6,082	LIN FT	$2.00	$12,164	
	RNDM / THRM CRACK R&S	50.00%	6,701	LIN FT	$2.00	$13,402	
	PD PVMT PATCH MILL SURF	0.10%	17	SQ YD	$81.21	$1,380	
	PWFn = 0.8626			PW =	0.8626 X	$51,334	$44,281
YEAR 10	LONG SHLD JT R&S	100.00%	12,194	LIN FT	$2.00	$24,388	
	CNTR LINE JOINT R&S	100.00%	6,082	LIN FT	$2.00	$12,164	
	RNDM / THRM CRACK R&S	50.00%	6,701	LIN FT	$2.00	$13,402	
	PD PVMT PATCH MILL SURF	0.50%	86	SQ YD	$81.21	$6,984	
	PWFn = 0.7441			PW =	0.7441 X	$56,938	$42,367
YEAR 15	MILL PVMT & SHLD 2.00"	100.00%	22,315	SQ YD	$3.00	$66,945	
	PD PVMT PATCH MILL ADDL 2.00"	1.00%	172	SQ YD	$70.00	$12,040	
	HMA OVERLAY PVMT 2.00"	100.00%	17,150	SQ YD	$11.28	$193,812	
	HMA OVERLAY SHLD 2.00"	100.00%	5,156	SQ YD	$9.37	$48,294	
	PWFn = 0.6419			PW =	0.6419 X	$320,981	$206,064
YEAR 20	LONG SHLD JT R&S	100.00%	12,194	LIN FT	$2.00	$24,388	
	CNTR LINE JOINT R&S	100.00%	6,082	LIN FT	$2.00	$12,164	
	RNDM / THRM CRACK R&S	50.00%	6,701	LIN FT	$2.00	$13,402	
	PD PVMT PATCH MILL SURF	0.10%	17	SQ YD	$81.21	$1,380	
	PWFn = 0.5537			PW =	0.5537 X	$51,334	$28,422
YEAR 25	LONG SHLD JT R&S	100.00%	12,194	LIN FT	$2.00	$24,388	
	CNTR LINE JOINT R&S	100.00%	6,082	LIN FT	$2.00	$12,164	
	RNDM / THRM CRACK R&S	50.00%	6,701	LIN FT	$2.00	$13,402	
	PD PVMT PATCH MILL SURF	0.50%	86	SQ YD	$81.21	$6,984	
	PWFn = 0.4776			PW =	0.4776 X	$56,938	$27,194
YEAR 30	HMA LSCD INTERSTATE						
	MILL PVMT & SHLD 2.00"	100.00%	22,315	SQ YD	$3.00	$66,945	
	PD PVMT PATCH MILL ADDL 3.00"	2.00%	343	SQ YD	$70.00	$24,010	
	PD SHLD PATCH MILL ADDL 2.00"	1.00%	52	SQ YD	$79.37	$4,127	
	HMA OVERLAY PVMT 2.00"	100.00%	17,150	SQ YD	$11.28	$193,812	
	HMA OVERLAY SHLD 2.00"	100.00%	5,156	SQ YD	$9.37	$48,294	
	PWFn = 0.4120			PW =	0.4120 X	$336,968	$138,838
YEAR 35	LONG SHLD JT R&S	100.00%	12,194	LIN FT	$2.00	$24,388	
	CNTR LINE JOINT R&S	100.00%	6,082	LIN FT	$2.00	$12,164	
	RNDM / THRM CRACK R&S	50.00%	6,701	LIN FT	$2.00	$13,402	
	PD PVMT PATCH MILL SURF	0.10%	17	SQ YD	$81.21	$1,380	
	PWFn = 0.3554			PW =	0.3554 X	$51,334	$18,2[illegible]
YEAR 40	LONG SHLD JT R&S	100.00%	12,194	LIN FT	$2.00	$24,388	
	CNTR LINE JOINT R&S	100.00%	6,082	LIN FT	$2.00	$12,164	
	RNDM / THRM CRACK R&S	50.00%	6,701	LIN FT	$2.00	$13,402	
	PD PVMT PATCH MILL SURF	0.50%	86	SQ YD	$81.21	$6,984	
	PWFn = 0.3066			PW =	0.3066 X	$56,938	$17,495
							$522,785
	ROUTINE MAINTENANCE ACTIVITY		2.31	Lane Miles	0.00	$0	$0

45 YEAR LIFE CYCLE CRFn = 0.0407852

MAINTENANCE LIFE-CYCLE COST $522,785
MAINTENANCE ANNUAL COST PER MILE $36,954

PCC PAVEMENT

JPCP

ROUTE	I-57 (FAI 57)
SECTION	(20-6,-2,-3,-4,-4)R-3,20-6(B-2)
COUNTY	Franklin
LOCATION	I-57 Country Club Rd to MP 66
FACILITY TYPE	INTERSTATE

PROJECT LENGTH		3000 FT <=>	0.54 Miles	USER OVERRIDE COLUMN
# OF CENTERLINES		2 CL		
# OF LANES		4 LANES		
# OF EDGES		4 EP		
LANE WIDTH - AVERAGE		12 FT		
SHOULDER WIDTH	PCC Inside	6 FT		
	PCC Outside	10 FT		
	Total Width of Paved Shoulders	32 FT		

PAVEMENT THICKNESS (RIGID)	JPCP	11.50 IN	TIED SHLD
SHOULDER THICKNESS		11.50 IN	
POLICY OVERLAY THICKNESS		3.75 IN	

RIGID PAVEMENT TRAFFIC FACTORS	MINIMUM	ACTUAL	USE	On User Override
	10.66	78.11	78.11	
Worksheet Construction Type is New Construction		The Pavement Type is	JPCP	

INITIAL COSTS

ITEM	THICKNESS	100% QUANTITY	UNIT	UNIT PRICE	COST	USER SUPPLIED QUANTITY
JPC PAVEMENT	(11.50")	17,150	SQ YD	* $74.14 / SQ YD	$1,272,186	17,150
PAVEMENT REINFORCEMENT		0	SQ YD	* / SQ YD	$0	0
STABILIZED SUBBASE	(4.00")	17,150	SQ YD	* $27.43 / SQ YD	$470,671	17,150
PCC SHOULDERS		5,867	SQ YD	* $76.86 / SQ YD	$450,061	5,867
CURB & GUTTER		0	LIN FT	* / LIN FT	$0	0
SUBBASE GRAN MATL TY C		0	TONS	* / TON	$0	0
IMPROVED SUBGRADE	Modified Soil	0	SQ YD	* / SQ YD	$0	0
SUBBASE GRANULAR MATERIAL, TYPE A 12"		17,150	SQ YD	* $12.66 / SQ YD	$217,081	17,150
		0	SQ YD	* / SQ YD	$0	0
PAVEMENT REMOVAL		17,758	SQ YD	* $13.69 / SQ YD	$243,110	17,758
SHOULDER REMOVAL		9,087	SQ YD	* $7.82 / SQ YD	$71,130	9,087

Note: * Denotes User Supplied Quantity

RIGID CONSTRUCTION INITIAL COST $2,724,608
RIGID CONSTRUCTION ANNUAL COST PER MILE $192,624

MAINTENANCE COSTS

ITEM	THICKNESS	MATERIAL	UNIT COST	Schedule Quantity	Unit Cost Override
ROUTINE MAINTENANCE ACTIVITY			$0.00 / LANE MILE / YEAR		
HMA POLICY OVERLAY	(3.75")				
HMA POLICY OVERLAY PVMT	(3.75")		$19.30 / SQ YD		
HMA SURFACE MIX	(1.50")	Surface Mix	$8.46 / SQ YD		
HMA BINDER MIX	(2.25")	Top Binder Mix	$10.81 / SQ YD		
HMA POLICY OVERLAY SHLD	(3.75")	Shoulder Mix	$17.54 / SQ YD		
CLASS A PAVEMENT PATCHING			$165.00 / SQ YD		
CLASS B PAVEMENT PATCHING			$150.00 / SQ YD		
CLASS C SHOULDER PATCHING			$146.00 / SQ YD		
PARTIAL DEPTH PVMT PATCH (Mill & Fill HMA Surf)		Surface Mix	$78.40 / SQ YD		
PARTIAL DEPTH PVMT PATCH (Mill & Fill HMA 1.50")		Surface Mix	$78.40 / SQ YD		
LONGITUDINAL SHOULDER JOINT ROUT & SEAL			$2.00 / LIN FT		
CENTERLINE JOINT ROUT & SEAL			$2.00 / LIN FT		
REFLECTIVE TRANSVERSE CRACK ROUT & SEAL			$2.00 / LIN FT		
RANDOM CRACK ROUT & SEAL	[illegible]		$2.00 / LIN FT		

RIGID TOTAL LIFE-CYCLE COST $3,088,220
RIGID TOTAL ANNUAL COST PER MILE $218,331

MAINTENANCE AND REHABILITATION ACTIVITY SCHEDULE 07/24/18

JOINTED PLAIN CONCRETE PAVEMENT
UNBONDED JOINTED PLAIN CONCRETE OVERLAY
Figure 54-7.A

MAINTENANCE COSTS	ITEM	%	QUANTITY	UNIT	UNIT COST	COST	PRESENT WORTH
YEAR 10	PAVEMENT PATCH CLASS B	0.10%	17	SQ YD	$150.00	$2,550	
	PWFn = 0.7441			PW =	0.7441 X	$2,550	$1,897
YEAR 15	PAVEMENT PATCH CLASS B	0.20%	34	SQ YD	$150.00	$5,100	
	PWFn = 0.6419			PW =	0.6419 X	$5,100	$3,273
YEAR 20	PAVEMENT PATCH CLASS B	2.00%	343	SQ YD	$150.00	$51,450	
	SHOULDER PATCH CLASS C	0.50%	30	SQ YD	$146.00	$4,380	
	LONGITUDINAL SHLD JT R&S	100.00%	12,194	LIN FT	$2.00	$24,388	
	CENTERLINE JT R&S	100.00%	6,082	LIN FT	$2.00	$12,164	
	PWFn = 0.5537			PW =	0.5537 X	$92,382	$51,153
YEAR 25	PAVEMENT PATCH CLASS B	3.00%	515	SQ YD	$150.00	$77,250	
	SHOULDER PATCH CLASS C	1.00%	60	SQ YD	$146.00	$8,760	
	PWFn = 0.4776			PW =	0.4776 X	$86,010	$41,080
YEAR 30	INTERSTATE						
	PAVEMENT PATCH CLASS B	4.00%	686	SQ YD	$150.00	$102,900	
	SHOULDER PATCH CLASS C	1.50%	89	SQ YD	$146.00	$13,0[illegible]	
	HMA POLICY OVERLAY 3.75" (PVMT)	100.00%	17,150	SQ YD	$19.30	$330,431	
	HMA POLICY OVERLAY 3.75" (SHLD)	100.00%	5,156	SQ YD	$17.54	$90,551	
	PWFn = 0.4120			PW =	0.4120 X	$536,787	$221,148
YEAR 35	INTERSTATE						
	LONGITUDINAL SHLD JT R&S	100.00%	12,194	LIN FT	$2.00	$24,388	
	CENTERLINE JT R&S	100.00%	6,082	LIN FT	$2.00	$12,164	
	RANDOM CRACK R&S	50.00%	6,082	LIN FT	$2.00	$12,164	
	REFLECTIVE TRANSVERSE CRACK R&S	40.00%	3,896	LIN FT	$2.00	$7,790	
	PD PVMT PATCH MILL HMA SURF 1.50"	0.10%	17	SQ YD	$78.40	$1,333	
	PWFn = 0.3584			PW =	0.3584 X	$57,[illegible]	$20,564
YEAR 40	INTERSTATE						
	PAVEMENT PATCH CLASS B	0.50%	86	SQ YD	$150.00	$12,900	
	LONGITUDINAL SHLD JT R&S	100.00%	12,194	LIN FT	$2.00	$24,388	
	CENTERLINE JT R&S	100.00%	6,082	LIN FT	$2.00	$12,164	
	REFLECTIVE TRANSVERSE CRACK R&S	80.00%	5,846	LIN FT	$2.00	$11,692	
	RANDOM CRACK R&S	80.00%	6,082	LIN FT	$2.00	$12,164	
	PD PVMT PATCH MILL HMA SURF 1.50"	0.50%	86	SQ YD	$78.40	$6,743	
	PWFn = 0.3066			PW =	0.3066 X	$80,071	$24,546
							$363,612
	ROUTINE MAINTENANCE ACTIVITY		2.31	Lane Miles	$0.00	$0	$0

45 YEAR LIFE CYCLE CRFn = 0.0407852

MAINTENANCE LIFE-CYCLE COST $363,612
MAINTENANCE ANNUAL COST PER MILE $25,707

LIFE-CYCLE COST ANALYSIS: NEW DESIGN

Calculated / Revised: 7/19/18 11:44 AM

			JPCP	HMA
CONSTRUCTION	INITIAL COST	PRESENT WORTH	$2,724,608	$2,387,663
		ANNUAL COST PER MILE	$192,624	$168,603
MAINTENANCE	LIFE-CYCLE COST	PRESENT WORTH	$363,612	$522,785
		ANNUAL COST PER MILE	$25,707	$36,954
TOTAL	LIFE-CYCLE COST	PRESENT WORTH	$3,088,220	$2,910,426
		ANNUAL COST PER MILE	$218,331	$205,761

LIFE-CYCLE COST ANALYSIS: FINAL SUMMARY

LOWEST COST OPTION		HMA	$205,761	
OTHER OPTIONS (LOWEST TO HIGHEST)	TYPE / PERCENTAGE	JPCP	$218,331	6.1%