Illinois Department of Transportation

To:	Anthony J. Quigley	Attn:	John Baczek
From:	Jack A. Elston	By:	Michael Brand
Subject:	Pavement Design Approval		
Date:	December 12, 2019		

Route:	Willow Road East Ramps	Job No.:	D-91-298-99
Section:	15161-1	Contract No.:	60D77
County:	Cook	Target Letting:	January 2020
Limits:	IL 21 Interchange		

On December 2, 2019, the Pavement Selection Committee met to review the pavement design for the above referenced project which was submitted on November 6, 2019. The scope of the project is to reconstruct Ramps B & D of the interchange with IL 21as advanced work for the planned reconstruction of Willow Road from east the Des Plaines River to east of Sanders Road.

The LCCA was performed on the Willow Road mainline and resulted in the HMA and PCC options being within 10%. For continuity and ease of maintenance, the District preferred the PCC option for the mainline and the pavement types for the two ramps would then also be PCC by policy.

The Committee noted the 4" Stabilized Subbase had been omitted from the mainline PCC design but it should have been included since some of the project would have tied shoulders. After correction, the revised LCCA still resulted in the HMA and PCC designs being within 10% of each other. Committee then concurred with the District's preference of using the PCC design.

In summary, the pavement design selected by the Committee is as follows:

Ramps B & D Reconstruction	Willow Road Mainline Reconstruction
9" PCC Pavement	10.25" PCC Pavement
Tied Curb & Gutter	Tied PCC Shoulders or Curb & Gutter
12" Improved Subgrade	4" Stabilized Subbase
	12" Improved Subgrade

If you have any questions, please contact Mike Brand at (217) 782-7651.

Illinois Department of Transportation

Memorandum

To: Jack Elston Attn: Michael Brand

From: Jose A. Dominguez By: Ojas Patel

Subject: Pavement Analysis (REVISED)*

Date: November 6, 2019

*Route: Willow Road East Ramps
Limits: at IL 21
Section: 1516I-1
Current target: 01CY20

County: Cook
Contract No.: 60D77
Job No.: D-91-298-99

We have completed the pavement analysis for the above captioned location. Review by the Central Office is required since the total pavement area for reconstruction exceeds 4,750 Square Yards. The following is the scope of the project:

Reconstruction of Ramps B & D as an advance work to the planned Willow Road reconstruction from the Des Plaines River to Sanders Road.

The life-cycle cost analysis does not favor HMA or PCC pavement by more than 10% for Willow Road. Review by pavement selection committee will be required according to the flowchart in Figure 54-1.A of Chapter 54 of the BDE Manual. District One recommends PCC pavement as the life-cycle cost analysis favors PCC pavement by 9.5% and Willow Road existing pavement is PCC at both project limits and would provide for lower future maintenance needs and continuity. Per BDE 54-1.06, the pavement type for the ramps at IL 21 will match the pavement type as mainline Willow Road.

Ramps B & D
Reconstruction
PCC Curb and Gutter (Tied)
9" PCC Pavement (Jointed)[1]
12" Aggregate Subgrade Improvement[3]

Willow Road (Future Contract)
Reconstruction
PCC Curb and Gutter (Tied)
10 ¼" PCC Pavement (Jointed)[2]
12" Aggregate Subgrade Improvement[3]

[1]Designer Note 1: Use pay item **42000401, PORTLAND CEMENT CONCRETE PAVEMENT 9" (JOINTED),** paid for in square yards. Transverse contraction joints should be reduced to a maximum of 14 foot spacing for 9" PCC pavement. When variable width lanes (12'-18') exceed 14 feet in width, a centerline joint should be added to avoid longitudinal cracking; see Bureau of Design Standard 53.

[2]Designer Note 2: Use pay item **42000506, PORTLAND CEMENT CONCRETE PAVEMENT 10 ¼" (JOINTED),** paid for in square yards.

[3]Designer Note 3: Use pay item **30300112, AGGREGATE SUBGRADE IMPROVEMENT, 12"**, paid in square yards.

If you have any questions or need additional information, please contact Ojas Patel, Pavement Design Engineer, at (847)705-4550.

By: José A. Dominguez
Jose A. Dominguez, P.E.
Project Support Engineer

PROJECT LOCATION MAP

Willow Road

EB Entrance Ramp at Milwaukee Ave (Ramp B) & WB Exit Ramp at Milwaukee Ave (Ramp D)

Contract 60D77

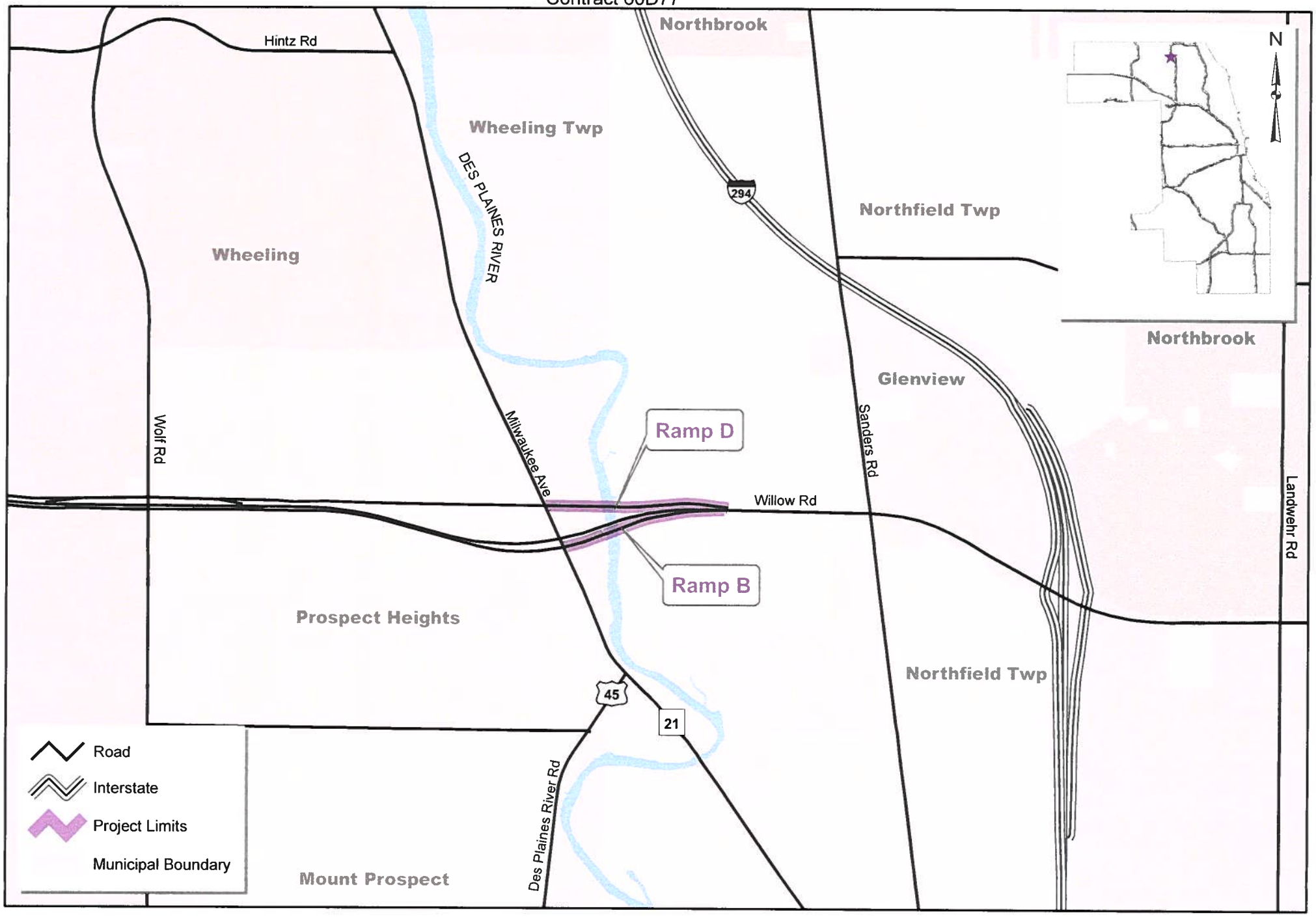

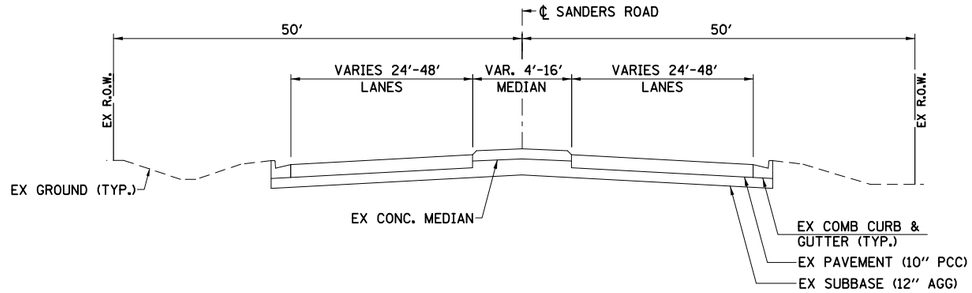

SANDERS ROAD

STATION 7+34 TO STATION 30+57

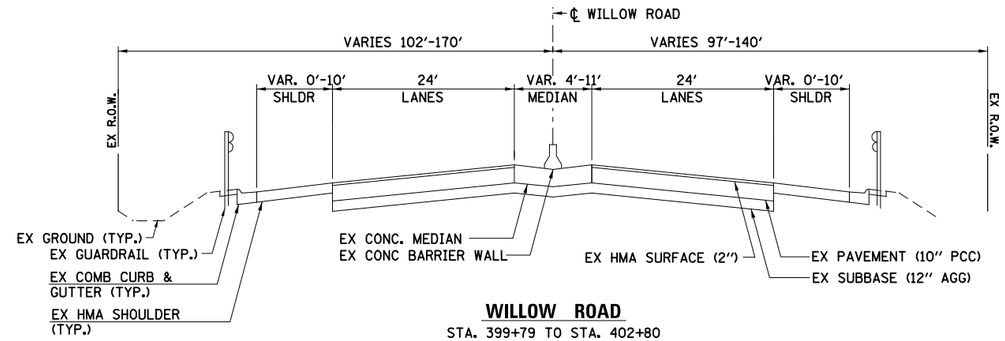

WILLOW ROAD

STA. 399+79 TO STA. 402+80

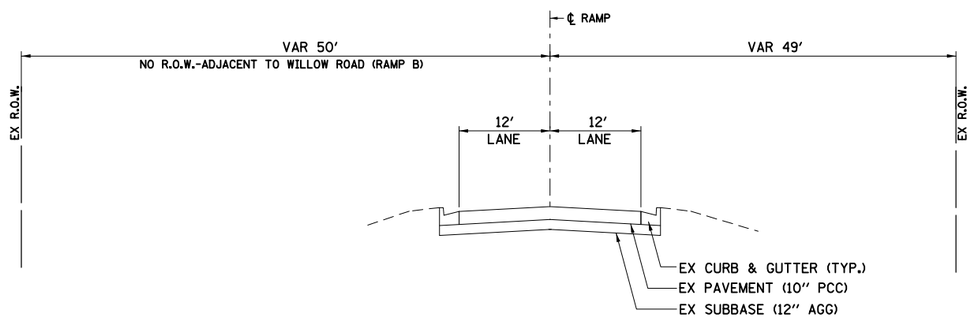

RAMPS B & D

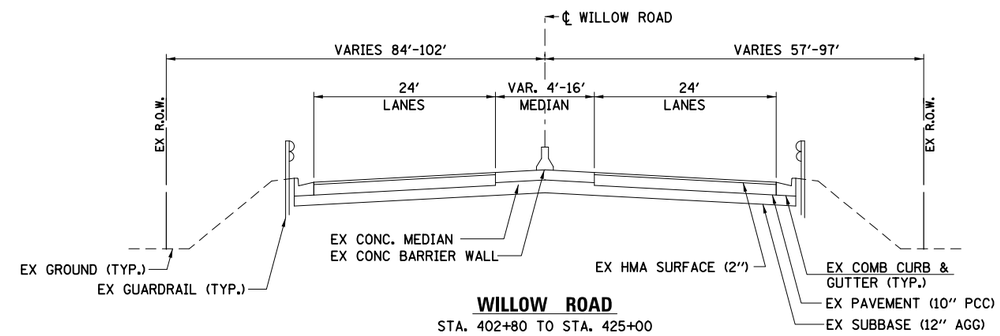

WILLOW ROAD

STA. 402+80 TO STA. 425+00

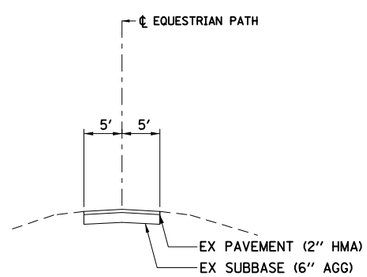

EQUESTRIAN PATH

STA. 402+80 TO STA. 425+00

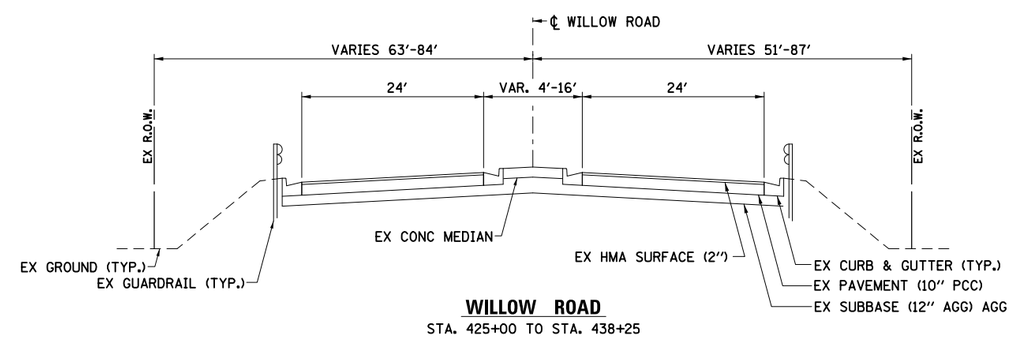

WILLOW ROAD

STA. 425+00 TO STA. 438+25

PLAN		BY	DATE
NOTE BOOK NO. ____	SURVEYED		
	PLOTTED		
	ALIGNMENT CHECKED		
	RT. OF WAY CHECKED		
	CADD FILE NAME		

PROFILE		BY	DATE
NOTE BOOK NO. ____	SURVEYED		
	PLOTTED		
	GRADES CHECKED		
	B.M. NOTED		
	STRUCTURE NOTAT'NS CHK'D		

FILE NAME = 020_sht_typ_01.dgn

Wight

USER NAME = bhenrichs	DESIGNED BAH	REVISED
	DRAWN BAH	REVISED
PLOT SCALE = 20.000 ′ / in.	CHECKED KAC	REVISED
PLOT DATE = 9/5/2013	DATE 09-06-2013	REVISED

STATE OF ILLINOIS
DEPARTMENT OF TRANSPORTATION

WILLOW ROAD – DES PLAINES RIVER TO WATERVIEW DRIVE
EXISTING TYPICAL SECTIONS

SCALE: | SHEET NO. 1 OF 6 SHEETS | STA. TO STA.

F.A.P. RTE.	SECTION	COUNTY	TOTAL SHEETS	SHEET NO.
305	1516I-1616-R	COOK	441	28
		CONTRACT NO. 60L75		
FED. ROAD DIST. NO.	ILLINOIS	FED. AID PROJECT		

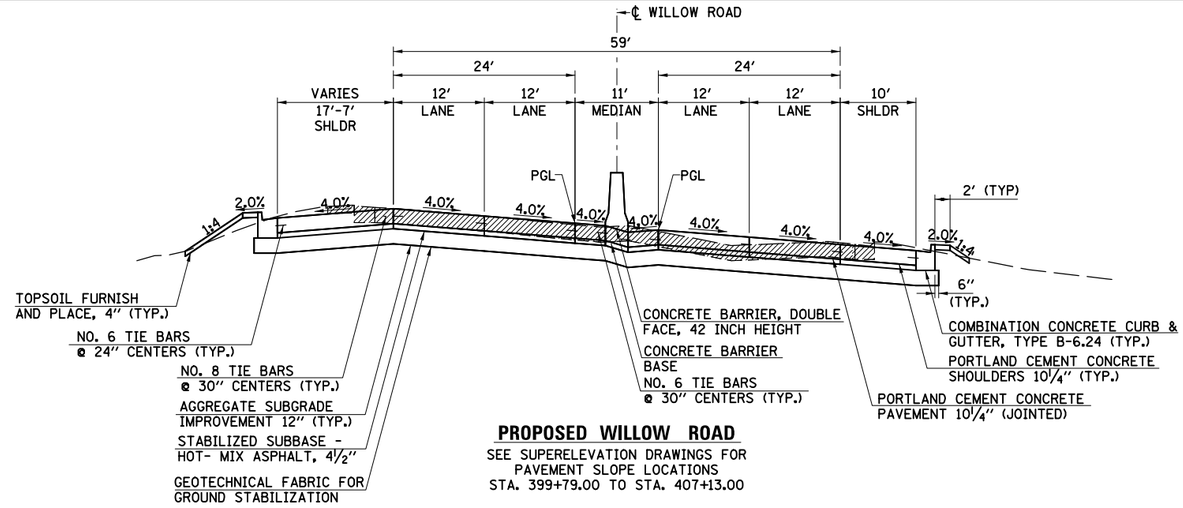

PROPOSED WILLOW ROAD

SEE SUPERELEVATION DRAWINGS FOR PAVEMENT SLOPE LOCATIONS
STA. 399+79.00 TO STA. 407+13.00

HMA MIXTURE REQUIREMENTS

MIXTURE TYPE	AIR VOIDS @ NDES
TEMPORARY PAVEMENT	
HOT-MIX ASPHALT SURFACE COURSE, MIX "D", N50 (IL 9.5mm), 2"	4% @ 50 GYR.
HOT-MIX ASPHALT BINDER COURSE IL-19.0, N50, 12½"	4% @ 50 GYR.
STABILIZED SUBBASE	
STABILIZED SUBBASE HMA (IL-19mm)	2% @ 30 GYR.

NOTES:
1. THE WEIGHT USED TO CALCULATE ALL HMA SURFACE MIXTURE QUANTITIES IS 112 LBS/SQ YD/IN.
2. THE "AC TYPE" FOR POLYMERIZED HMA MIXES SHALL BE "SBS/SBR PG 76 -22" AND FOR NON- POLYMERIZED HMA THE "AC TYPE" SHALL BE "PG 64-22" UNLESS MODIFIED BY DISTRICT ONE SPECIAL PROVISIONS.
3. FOR USE OF RECYCLED MATERIALS SEE DISTRICT ONE SPECIAL PROVISIONS.

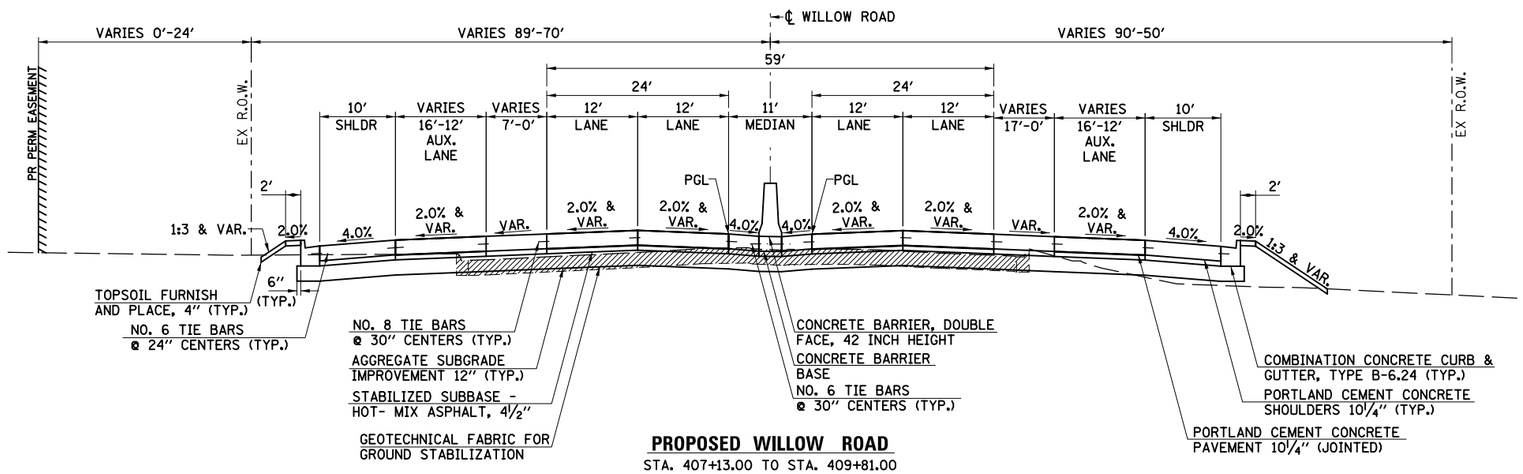

PROPOSED WILLOW ROAD

STA. 407+13.00 TO STA. 409+81.00

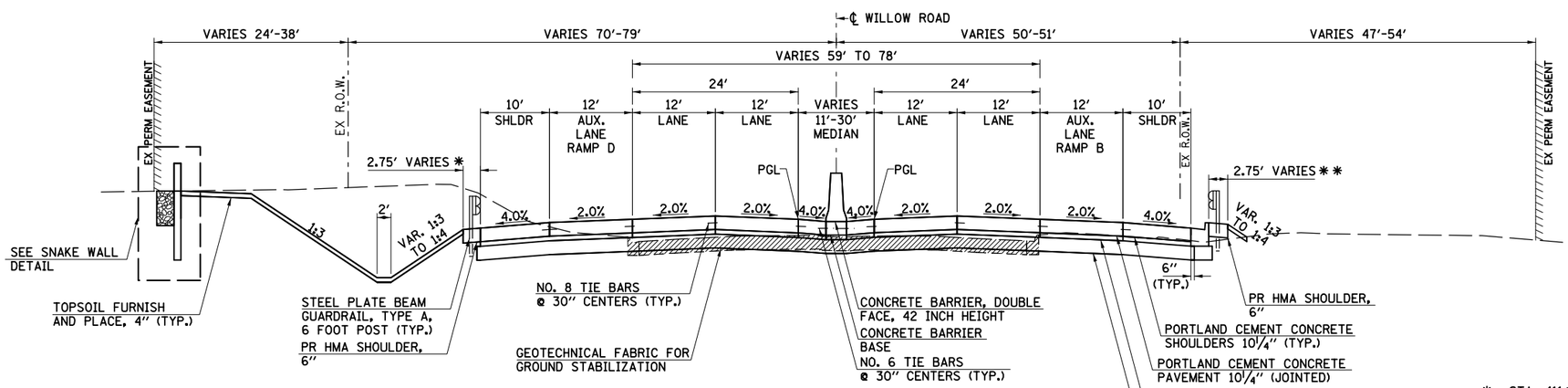

PROPOSED WILLOW ROAD

SEE SUPERELEVATION DRAWINGS FOR PAVEMENT SLOPE LOCATIONS
STA. 409+81.00 TO STA. 418+39.00
STA. 424+49.00 TO STA. 425+19.00

✱ STA. 411+33.54 TO STA. 412+73.31
✱✱ STA. 41040.21 TO STA. 411+79.95

LEGEND

- EX PAVEMENT REMOVAL
- EX CURB & GUTTER REMOVAL
- EX SIDEWALK REMOVAL

PLAN	BY	DATE
SURVEYED		
PLOTTED		
ALIGNMENT CHECKED		
RT. OF WAY CHECKED		
CADD FILE NAME		
NOTE BOOK NO.		

PROFILE	BY	DATE
SURVEYED		
PLOTTED		
GRADES CHECKED		
BM. NOTED		
STRUCTURE NOTAT'NS CHK'D		
NOTE BOOK NO.		

FILE NAME = 020.sht_typ_02.dgn

Wight

USER NAME = bhenrichs	DESIGNED BAH	REVISED	
	DRAWN BAH	REVISED	
PLOT SCALE = 20.000 ' / in.	CHECKED KAC	REVISED	
PLOT DATE = 9/5/2013	DATE 09-06-2013	REVISED	

STATE OF ILLINOIS
DEPARTMENT OF TRANSPORTATION

WILLOW ROAD – DES PLAINES RIVER TO WATERVIEW DRIVE
PROPOSED TYPICAL SECTIONS
WILLOW ROAD

SCALE: | SHEET NO. 2 OF 6 SHEETS | STA. | TO STA.

F.A.P. RTE.	SECTION	COUNTY	TOTAL SHEETS	SHEET NO.
305	1516I-1616-R	COOK	441	29

CONTRACT NO. 60L75

FED. ROAD DIST. NO. | ILLINOIS | FED. AID PROJECT

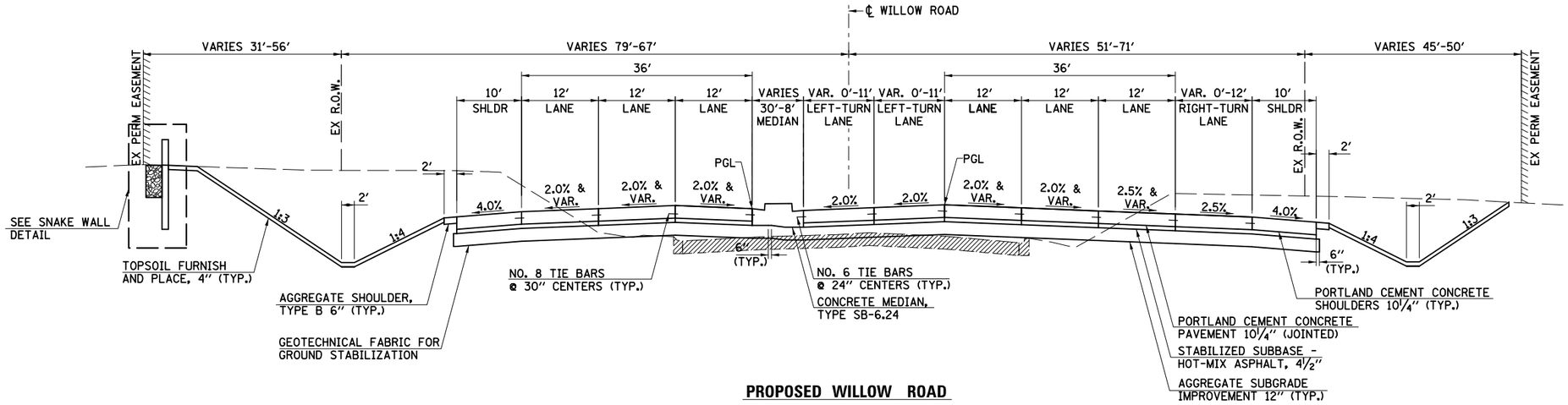

PROPOSED WILLOW ROAD

SEE SUPERELEVATION DRAWINGS FOR
PAVEMENT SLOPE LOCATIONS
STA. 418+39.00 TO STA. 424+49.00
STA. 425+19.00 TO STA. 427+19.00

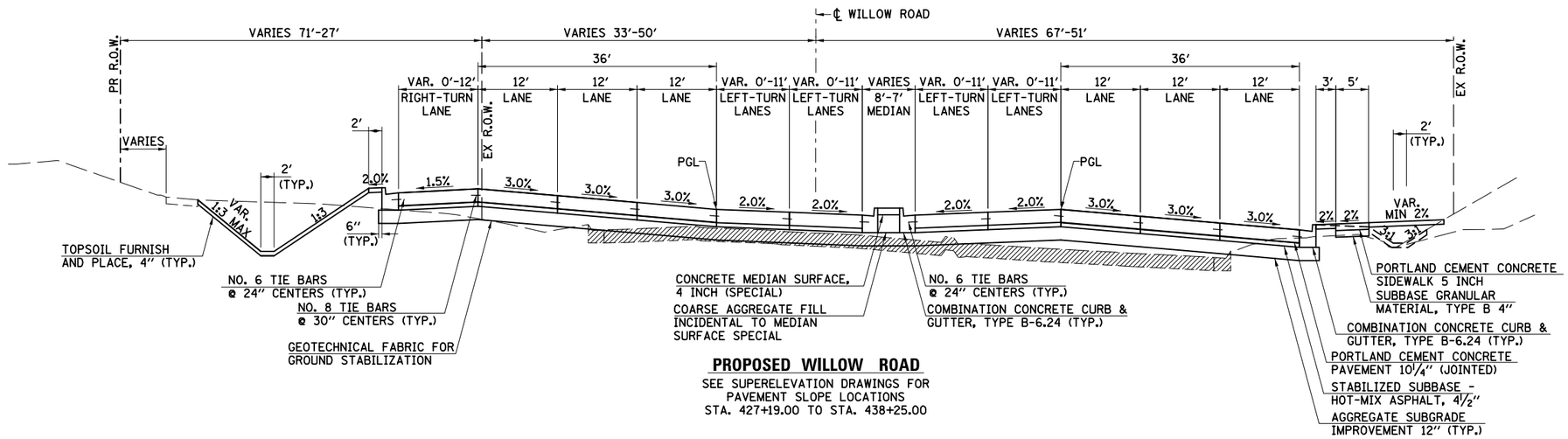

PROPOSED WILLOW ROAD

SEE SUPERELEVATION DRAWINGS FOR
PAVEMENT SLOPE LOCATIONS
STA. 427+19.00 TO STA. 438+25.00

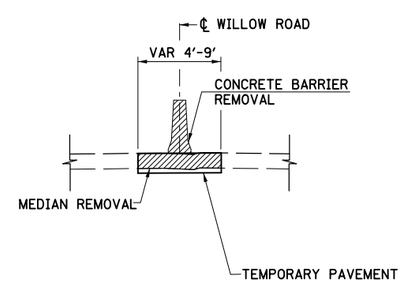

TEMPORARY CROSS-OVER

STA. 372+75.00 TO STA. 386+43.50

LEGEND

- EX PAVEMENT REMOVAL
- EX CURB & GUTTER REMOVAL
- EX SIDEWALK REMOVAL

PLAN	BY	DATE
SURVEYED		
PLOTTED		
ALIGNMENT CHECKED		
RT. OF WAY CHECKED		
CADD FILE NAME		
NOTE BOOK NO.		

PROFILE	BY	DATE
SURVEYED		
PLOTTED		
GRADES CHECKED		
B.M. NOTED		
STRUCTURE NOTAT'NS CHKD		
NOTE BOOK NO.		

FILE NAME = 020_sht_typ_03.dgn

Wight

USER NAME = bhenrichs	DESIGNED BAH	REVISED	
	DRAWN BAH	REVISED	
PLOT SCALE = 20.000 ' / in.	CHECKED KAC	REVISED	
PLOT DATE = 9/5/2013	DATE 09-06-2013	REVISED	

STATE OF ILLINOIS
DEPARTMENT OF TRANSPORTATION

WILLOW ROAD – DES PLAINES RIVER TO WATERVIEW DRIVE
PROPOSED TYPICAL SECTIONS
WILLOW ROAD

SCALE: | SHEET NO. 3 OF 6 SHEETS | STA. | TO STA.

F.A.P. RTE.	SECTION	COUNTY	TOTAL SHEETS	SHEET NO.
305	1516I-1616-R	COOK	441	30
		CONTRACT NO. 60L75		

FED. ROAD DIST. NO. | ILLINOIS | FED. AID PROJECT

Legend

= Pavement Reconstruction

= Shoulders

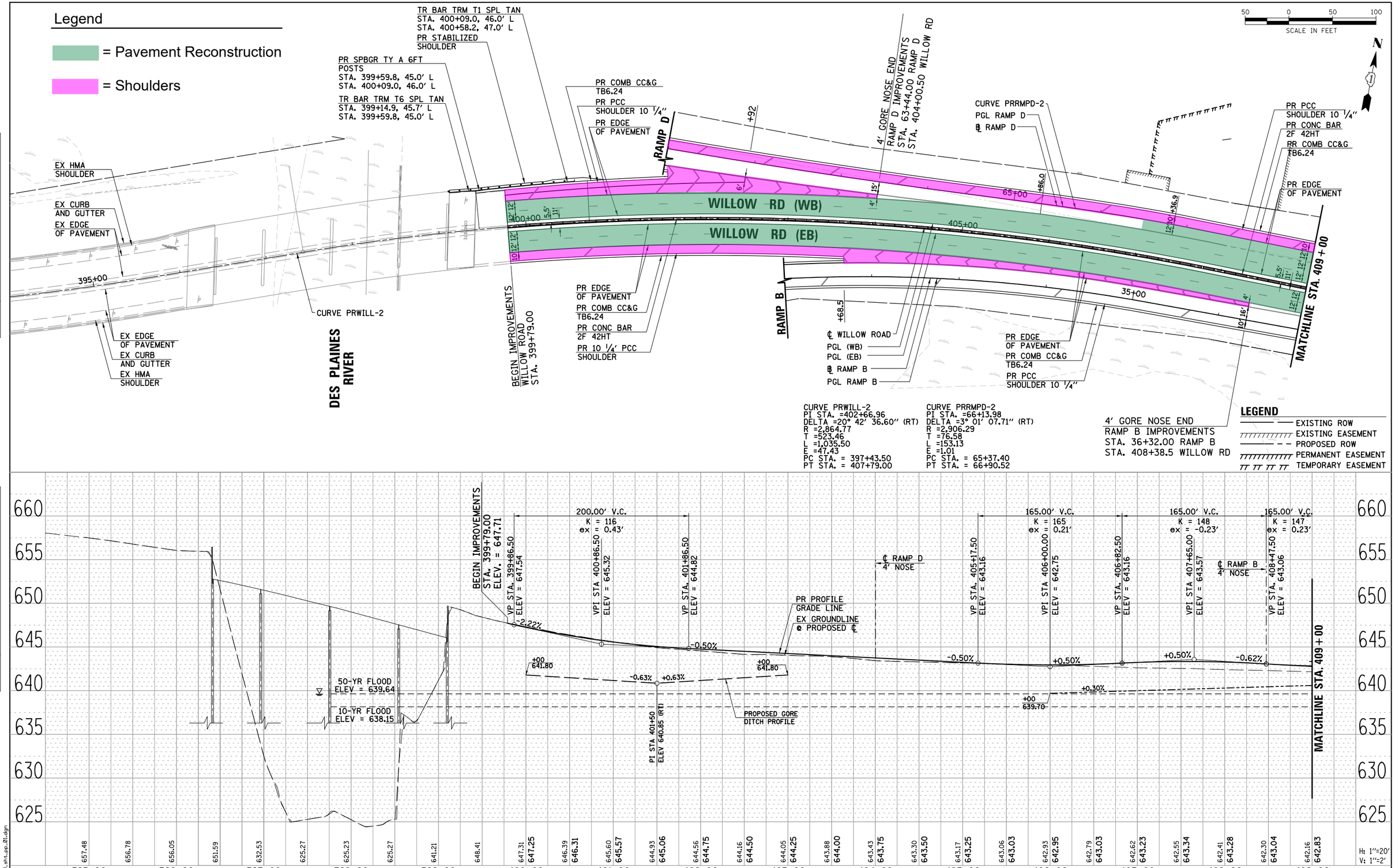

PLAN	BY	DATE
SURVEYED		
PLOTTED		
ALIGNMENT CHECKED		
RT. OF WAY CHECKED		
CADD FILE NAME		
NOTE BOOK NO.		

PROFILE	BY	DATE
SURVEYED		
PLOTTED		
GRADES CHECKED		
B.M. NOTED		
STRUCTURE NOTAT'NS CHKD		
NOTE BOOK NO.		

FILE NAME = 020_sht_pp_01.dgn

Wight

USER NAME = bhenrichs	DESIGNED BAH	REVISED
	DRAWN BAH	REVISED
PLOT SCALE = 100.000 ' / in.	CHECKED KAC	REVISED
PLOT DATE = 9/5/2013	DATE 09-06-2013	REVISED

STATE OF ILLINOIS
DEPARTMENT OF TRANSPORTATION

WILLOW ROAD – DES PLAINES RIVER TO WATERVIEW DRIVE
PLAN & PROFILE
WILLOW ROAD

SCALE: | SHEET NO. 1 OF 4 SHEETS | STA. 394+00 TO STA. 409+00

F.A.P. RTE.	SECTION	COUNTY	TOTAL SHEETS	SHEET NO.
305	1516I-1616-R	COOK	441	65
		CONTRACT NO. 60L75		

FED. ROAD DIST. NO. | ILLINOIS | FED. AID PROJECT

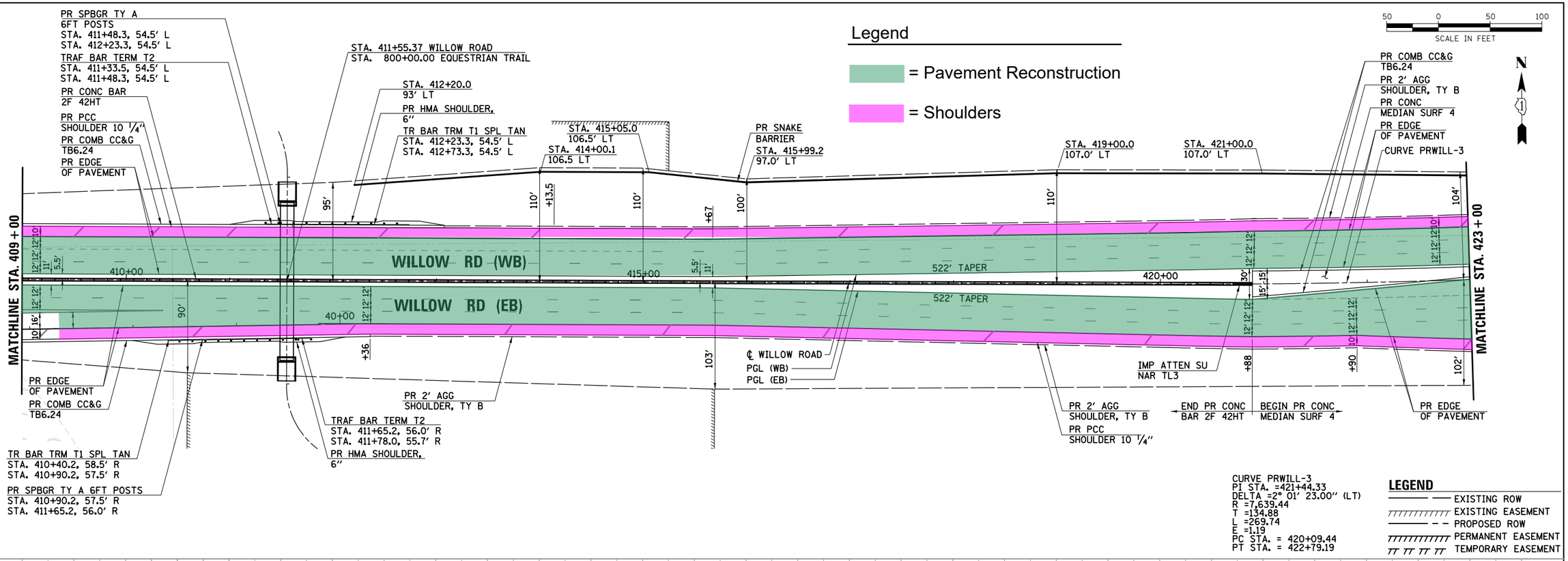

CURVE PRWILL-3
PI STA. =421+44.33
DELTA =2° 01' 23.00" (LT)
R =7,639.44
T =134.88
L =269.74
E =1.19
PC STA. = 420+09.44
PT STA. = 422+79.19

LEGEND

- EXISTING ROW
- EXISTING EASEMENT
- PROPOSED ROW
- PERMANENT EASEMENT
- TEMPORARY EASEMENT

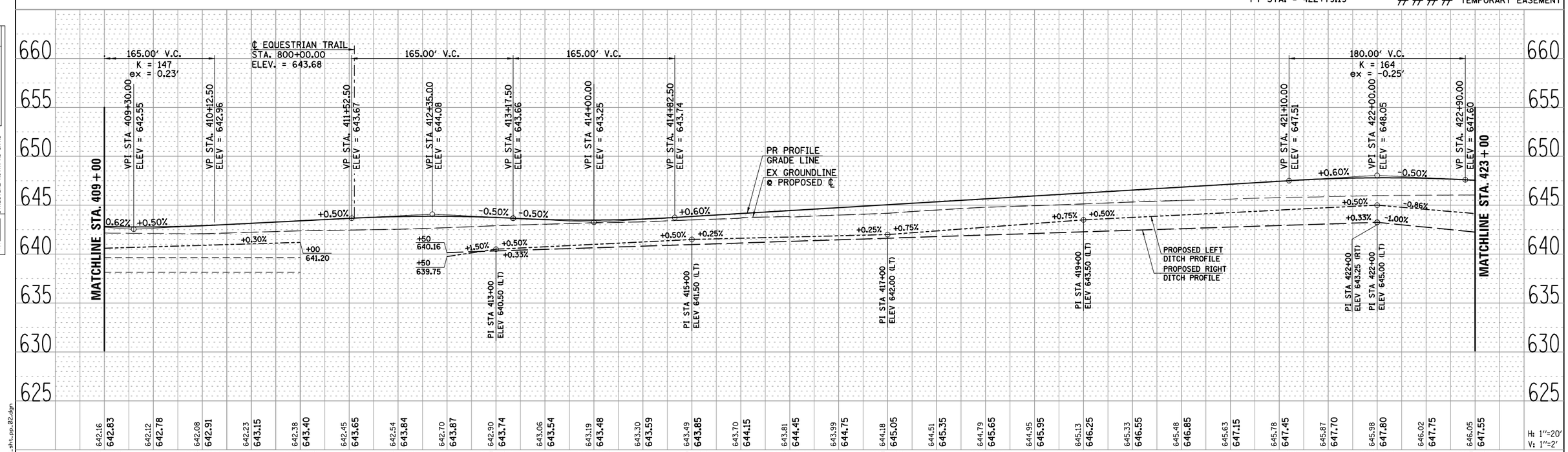

USER NAME = bhenrichs	DESIGNED BAH	REVISED	
	DRAWN BAH	REVISED	
PLOT SCALE = 100.000 ' / in.	CHECKED KAC	REVISED	
PLOT DATE = 9/5/2013	DATE 09-06-2013	REVISED	

Wight

STATE OF ILLINOIS
DEPARTMENT OF TRANSPORTATION

WILLOW ROAD – DES PLAINES RIVER TO WATERVIEW DRIVE
PLAN & PROFILE
WILLOW ROAD

SCALE: | SHEET NO. 2 OF 4 SHEETS | STA. 409+00 TO STA. 423+00

F.A.P. RTE.	SECTION	COUNTY	TOTAL SHEETS	SHEET NO.
305	1516I-1616-R	COOK	441	66

CONTRACT NO. 60L75

FED. ROAD DIST. NO. | ILLINOIS | FED. AID PROJECT

PLAN: SURVEYED / PLOTTED / ALIGNMENT CHECKED / RT. OF WAY CHECKED / CADD FILE NAME / NOTE BOOK / NO. / BY / DATE

PROFILE: SURVEYED / PLOTTED / GRADES CHECKED / BM. NOTED / STRUCTURE NOTATNS CHKD / NOTE BOOK / NO. / BY / DATE

FILE NAME = 028_sht_pp_02.dgn

Legend

= Pavement Reconstruction

= Shoulders

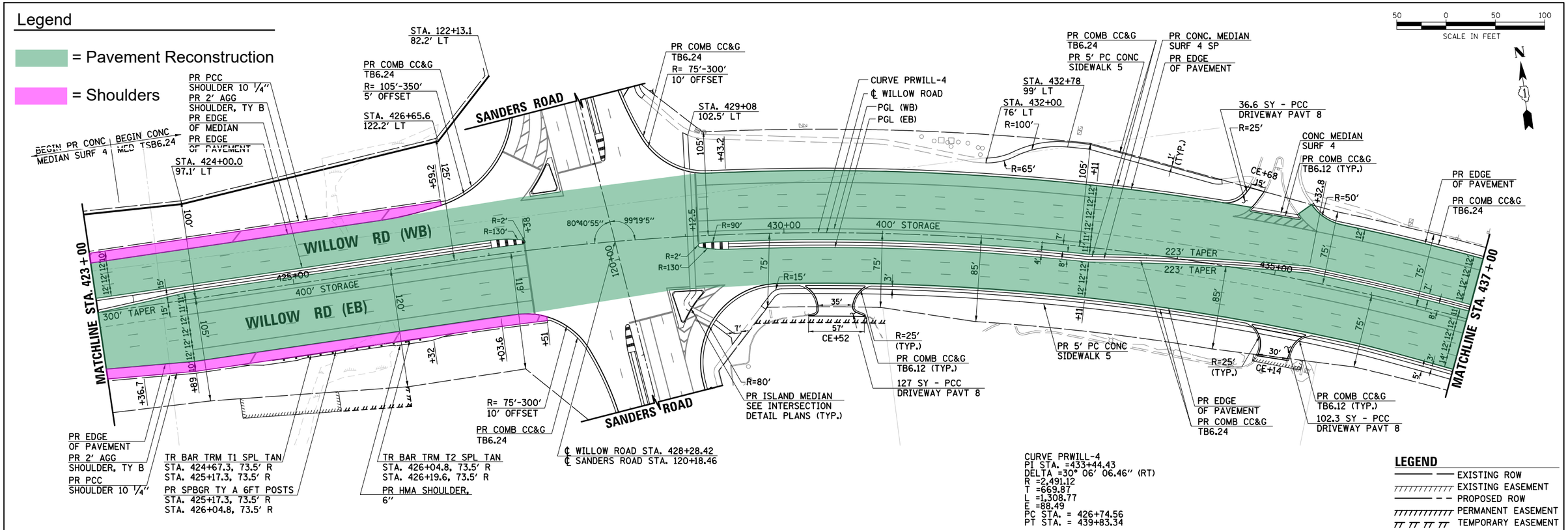

CURVE PRWILL-4
PI STA. =433+44.43
DELTA =30° 06' 06.46" (RT)
R =2,491.12
T =669.87
L =1,308.77
E =88.49
PC STA. = 426+74.56
PT STA. = 439+83.34

LEGEND

- EXISTING ROW
- EXISTING EASEMENT
- PROPOSED ROW
- PERMANENT EASEMENT
- TEMPORARY EASEMENT

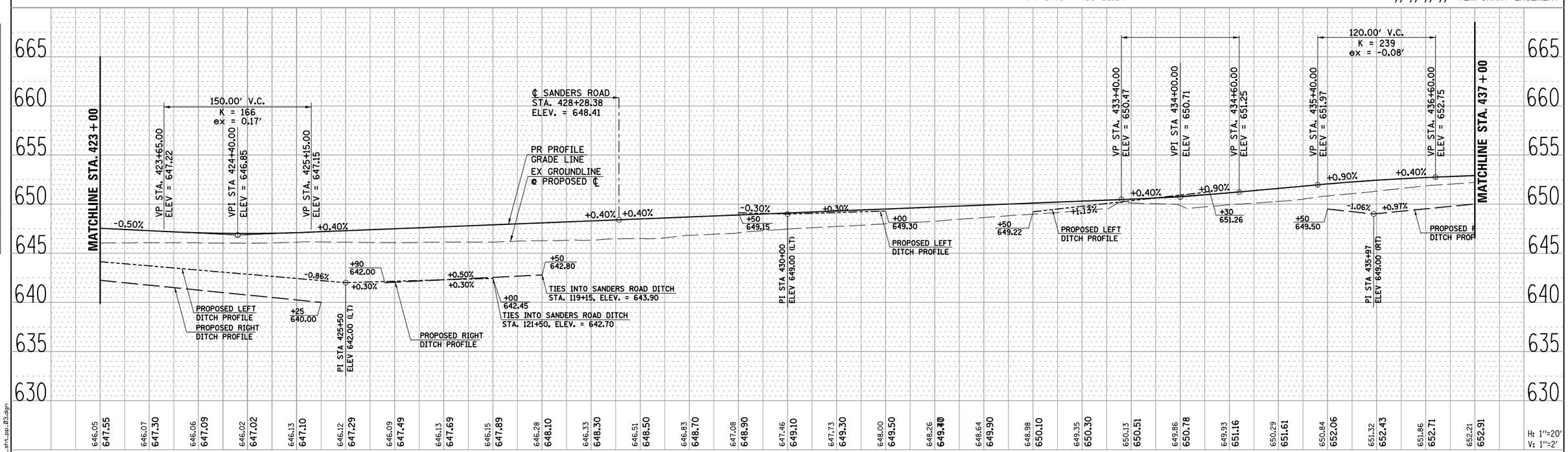

USER NAME = bhenrichs	DESIGNED BAH	REVISED	
	DRAWN BAH	REVISED	
PLOT SCALE = 100.000 ' / in.	CHECKED KAC	REVISED	
PLOT DATE = 9/5/2013	DATE 09-06-2013	REVISED	

STATE OF ILLINOIS
DEPARTMENT OF TRANSPORTATION

WILLOW ROAD – DES PLAINES RIVER TO WATERVIEW DRIVE
PLAN & PROFILE
WILLOW ROAD

SCALE: | SHEET NO. 3 OF 4 SHEETS | STA. 423+00 TO STA. 437+00

F.A.P. RTE.	SECTION	COUNTY	TOTAL SHEETS	SHEET NO.
305	1516I-1616-R	COOK	441	67

CONTRACT NO. 60L75

FED. ROAD DIST. NO. | ILLINOIS | FED. AID PROJECT

FILE NAME = 028_sht_pp_03.dgn

Legend

= Pavement Reconstruction

= Shoulders

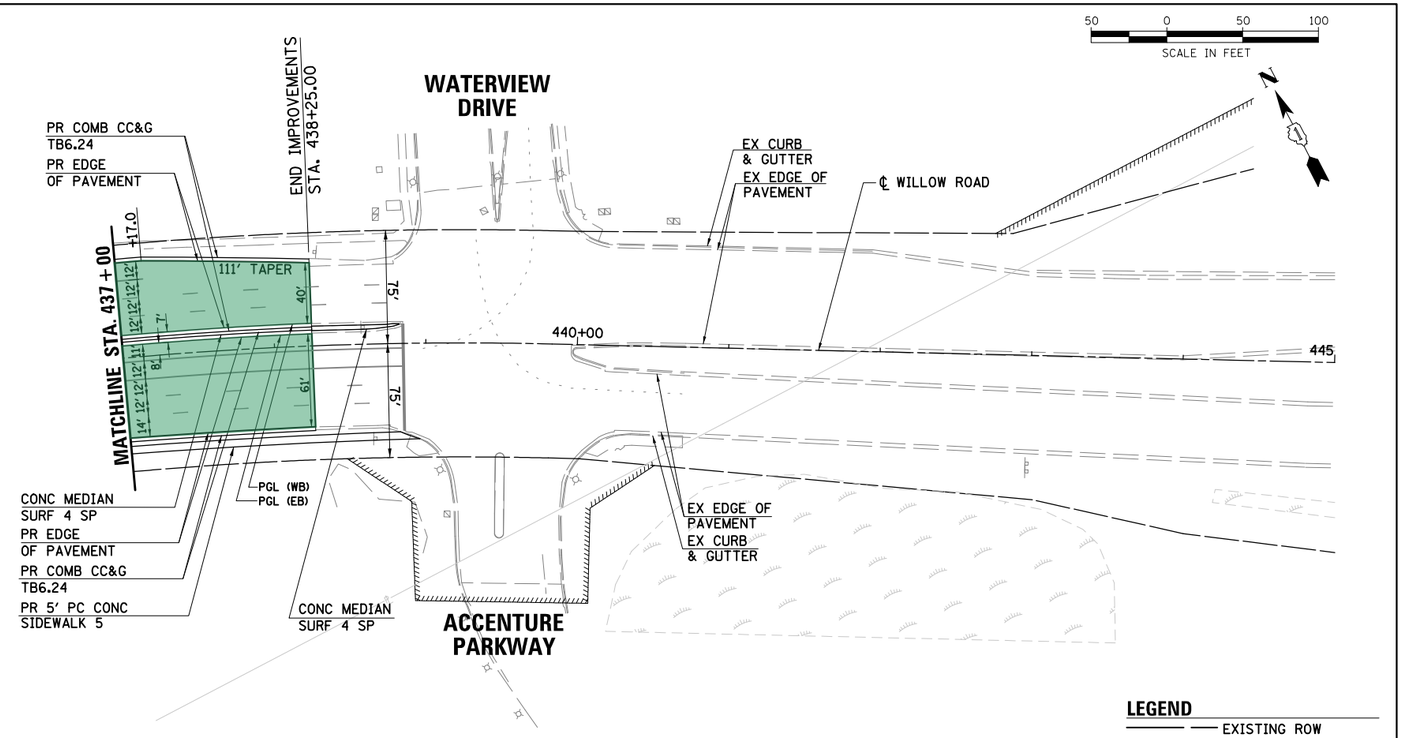

LEGEND

- EXISTING ROW
- EXISTING EASEMENT
- PROPOSED ROW
- PERMANENT EASEMENT
- TEMPORARY EASEMENT

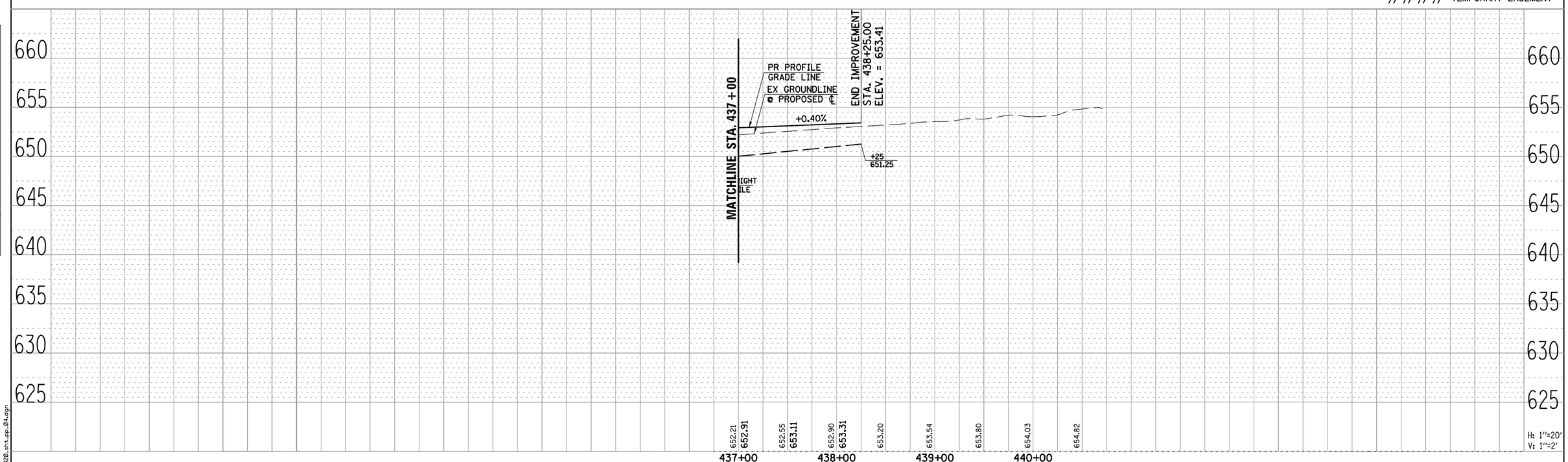

PLAN	BY	DATE
SURVEYED		
PLOTTED		
ALIGNMENT CHECKED		
RT. OF WAY CHECKED		
CADD FILE NAME		
NOTE BOOK NO.		

PROFILE	BY	DATE
SURVEYED		
PLOTTED		
GRADES CHECKED		
BM. NOTED		
STRUCTURE NOTATNS CHKD		
NOTE BOOK NO.		

FILE NAME = 020_sht_pp_04.dgn

Wight

USER NAME = bhenrichs	DESIGNED BAH	REVISED	
	DRAWN BAH	REVISED	
PLOT SCALE = 100.000 ' / in.	CHECKED KAC	REVISED	
PLOT DATE = 9/5/2013	DATE 09-06-2013	REVISED	

STATE OF ILLINOIS
DEPARTMENT OF TRANSPORTATION

WILLOW ROAD – DES PLAINES RIVER TO WATERVIEW DRIVE
PLAN & PROFILE
WILLOW ROAD

SCALE: | SHEET NO. 4 OF 4 SHEETS | STA. 437+00 TO STA. 445+00

F.A.P. RTE.	SECTION	COUNTY	TOTAL SHEETS	SHEET NO.
305	1516I-1616-R	COOK	441	68
		CONTRACT NO. 60L75		

FED. ROAD DIST. NO. | ILLINOIS | FED. AID PROJECT

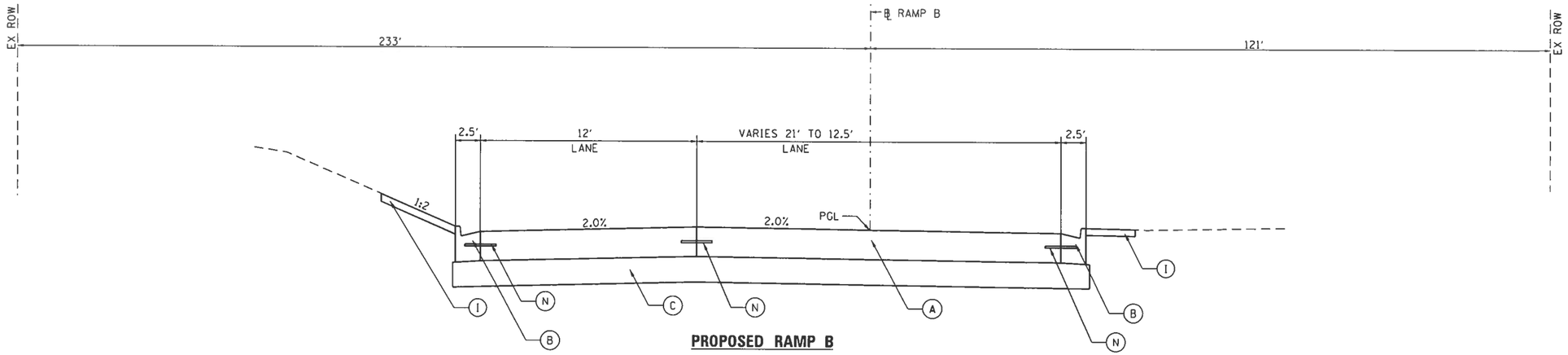

PROPOSED RAMP B

STA 20+91.3 TO STA 21+30.4

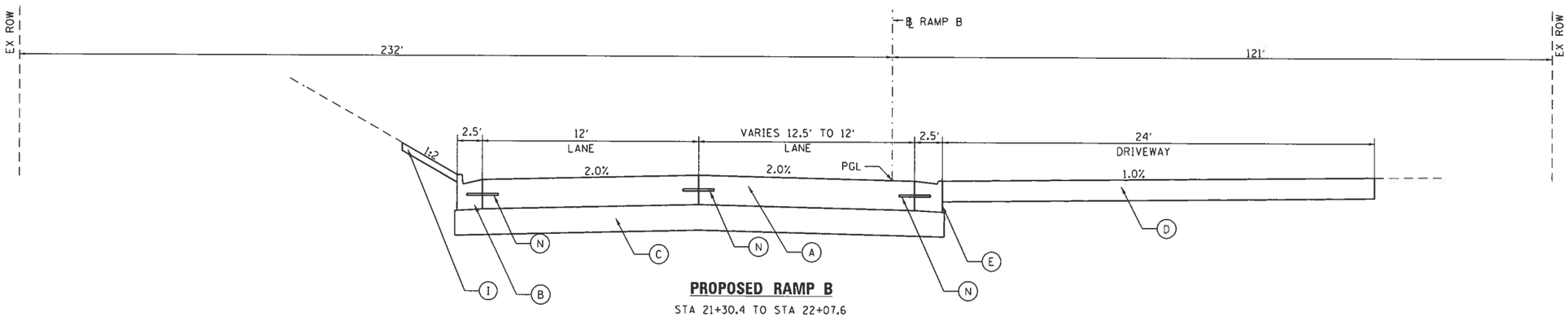

PROPOSED RAMP B

STA 21+30.4 TO STA 22+07.6

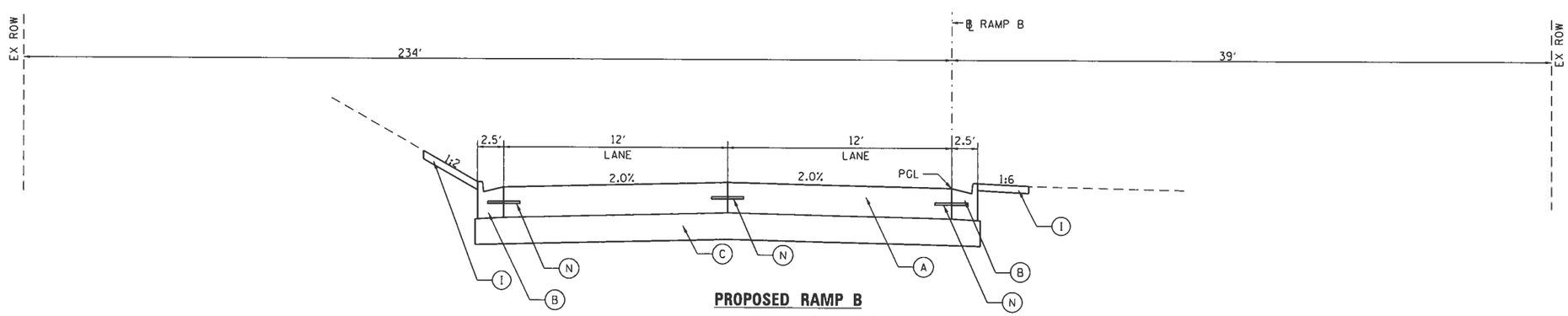

PROPOSED RAMP B

STA 22+07.6 TO STA 22+79.3

LEGEND

- (A) PORTLAND CEMENT CONCRETE PAVEMENT 10¼" (JOINTED)
- (B) COMBINATION CONCRETE CURB & GUTTER, TYPE B-6.24
- (C) AGGREGATE SUBGRADE IMPROVEMENT 12" (TYP.)
- (D) HMA DRIVEWAY PAVEMENT 8"
- (E) DEPRESSED CURB AND GUTTER
- (F) AGGREGATE SHOULDERS TYPE B 8"
- (G) STEEL PLATE BEAM GUARDRAIL TYPE A 6' POSTS
- (H) PAVEMENT CONNECTOR (PCC) W/ WELDED WIRE REINFORCEMENT 15"
- (I) EXCAVATE & PLACE TOPSOIL, 4" W/ EROSION CONTROL BLANKET & CLASS 2A SEEDING
- (J) PORTLAND CEMENT CONCRETE SHOULDER 10¼"
- (K) CONCRETE MEDIAN, TYPE SB-6.12
- (L) HOT-MIX ASPHALT SURFACE COURSE MIX "D" N50, 2"
- (M) PORTLAND CEMENT CONCRETE BASE COURSE WIDENING, 10"
- (N) EPOXY COAST, DEFORMED, NO. 6 TIE BARS, 24" LONG @ 24" C-C. COST INCIDENTAL TO PCC PAVEMENT
- (O) PREFORMED BOND BREAKER EXPANSION JOINT

PLAN		BY	DATE
NOTE BOOK NO.	SURVEYED		
	PLOTTED		
	ALIGNMENT CHECKED		
	GRADE WAS CHECKED		
	CADD FILE NAME		

PROFILE		BY	DATE
NOTE BOOK NO.	SURVEYED		
	PLOTTED		
	GRADES CHECKED		
	BLANKED		
	STRUCTURE NOTATNS CHKED		

FILE NAME = 60D77_sht_typ_pr_ramp8_01.dgn

Wight

USER NAME = untitled	DESIGNED KMB	REVISED
	DRAWN CJF	REVISED
PLOT SCALE = 20.0000 ' / in.	CHECKED	REVISED
PLOT DATE = 7/3/2019	DATE 7-03-2019	REVISED

STATE OF ILLINOIS
DEPARTMENT OF TRANSPORTATION

WILLOW ROAD AT DES PLAINES RIVER
PROPOSED TYPICAL SECTIONS
RAMP B

SHEET NO. 1 OF 4 SHEETS | STA. | TO STA.

F.A.P. RTE.	SECTION	COUNTY	TOTAL SHEETS	SHEET NO.
305	15161-1	COOK	149	18
		CONTRACT NO. 60D77		
FED. ROAD DIST. NO.	ILLINOIS	FED. AID PROJECT		

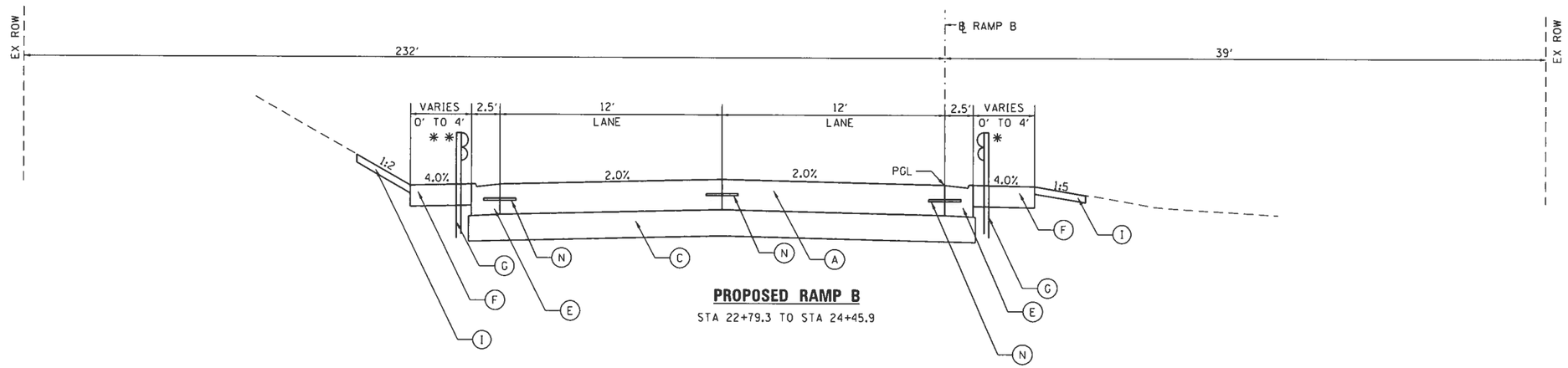

PROPOSED RAMP B

STA 22+79.3 TO STA 24+45.9

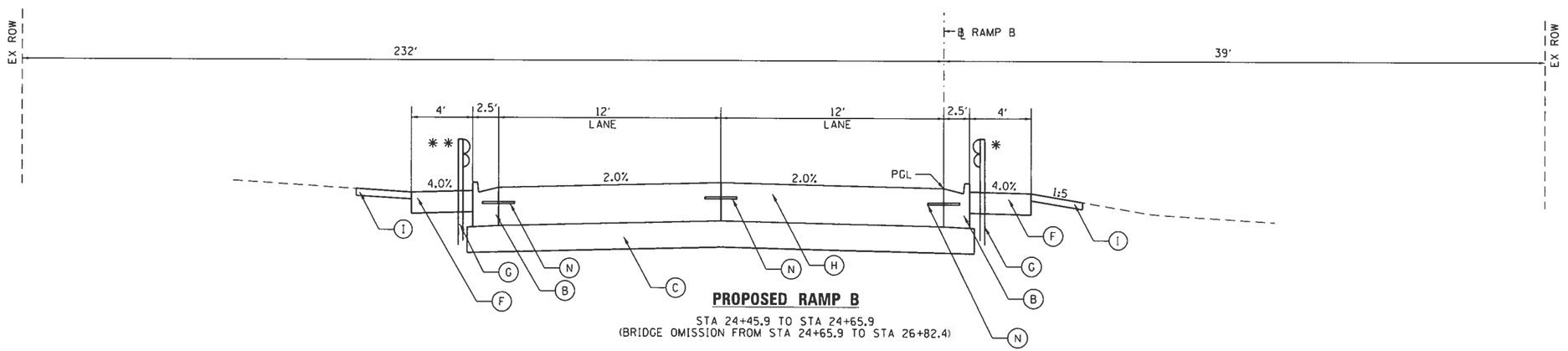

PROPOSED RAMP B

STA 24+45.9 TO STA 24+65.9
(BRIDGE OMISSION FROM STA 24+65.9 TO STA 26+82.4)

LEGEND

- (A) PORTLAND CEMENT CONCRETE PAVEMENT 10¼" (JOINTED)
- (B) COMBINATION CONCRETE CURB & GUTTER, TYPE B-6.24
- (C) AGGREGATE SUBGRADE IMPROVEMENT 12" (TYP.)
- (D) HMA DRIVEWAY PAVEMENT 8"
- (E) DEPRESSED CURB AND GUTTER
- (F) AGGREGATE SHOULDERS TYPE B 8"
- (G) STEEL PLATE BEAM GUARDRAIL TYPE A 6' POSTS
- (H) PAVEMENT CONNECTOR (PCC) W/ WELDED WIRE REINFORCEMENT 15"
- (I) EXCAVATE & PLACE TOPSOIL, 4" W/ EROSION CONTROL BLANKET & CLASS 2A SEEDING
- (J) PORTLAND CEMENT CONCRETE SHOULDER 10¼"
- (K) CONCRETE MEDIAN, TYPE SB-6.12
- (L) HOT-MIX ASPHALT SURFACE COURSE MIX "D" N50, 2"
- (M) PORTLAND CEMENT CONCRETE BASE COURSE WIDENING, 10"
- (N) EPOXY COAST, DEFORMED, NO. 6 TIE BARS, 24" LONG @ 24" C-C. COST INCIDENTAL TO PCC PAVEMENT
- (O) PREFORMED BOND BREAKER EXPANSION JOINT

GUARDRAIL LIMITS

* STA 23+13.17 TO STA 24+60.44

** STA 23+34.41 TO STA 24+81.68

AGGREGATE SHOULDER LIMITS

* STA 22+79.3 TO STA 24+65.9

** STA 23+00.5 TO STA 24+45.9

NOTE

PAVEMENT CONNECTOR (PCC) W/ WELDED WIRE REINFORCEMENT 15" (ITEM H) IS REPRESENTED TO BE THICKER THAN PORTLAND CEMENT CONCRETE PAVEMENT 10¼" (ITEM A). SECTIONS INCLUDING ITEM H SHALL SACRIFICE APPROXIMATELY 3" OF AGGREGATE SUBGRADE IMPROVEMENT (ITEM C) IN ORDER TO MAINTAIN A TYPICAL ROADWAY SECTION THICKNESS OF 22¼".

PLAN		BY	DATE
SURVEYED			
PLOTTED			
ALIGNMENT CHECKED			
DTM WAS PLACED			
NOTE BOOK NO.	CADD FILE NAME		

PROFILE		BY	DATE
SURVEYED			
PLOTTED			
GRADES CHECKED			
ALIGNMENT			
NOTE BOOK NO.	STRUCTURE NOTATIONS CHKD		

FILE NAME = 60D77_sht_typ_pr_ramp8_02.dgn

Wight	USER NAME = untitled	DESIGNED KMB	REVISED
		DRAWN CJF	REVISED
	PLOT SCALE = 20.0000 ' / in.	CHECKED	REVISED
	PLOT DATE = 7/3/2019	DATE 7-03-2019	REVISED

STATE OF ILLINOIS
DEPARTMENT OF TRANSPORTATION

WILLOW ROAD AT DES PLAINES RIVER
PROPOSED TYPICAL SECTIONS
RAMP B

SHEET NO. 2 OF 4 SHEETS | STA. | TO STA.

F.A.P. RTE.	SECTION	COUNTY	TOTAL SHEETS	SHEET NO.
305	15161-1	COOK	149	19
		CONTRACT NO. 60D77		
FED. ROAD DIST. NO.	ILLINOIS	FED. AID PROJECT		

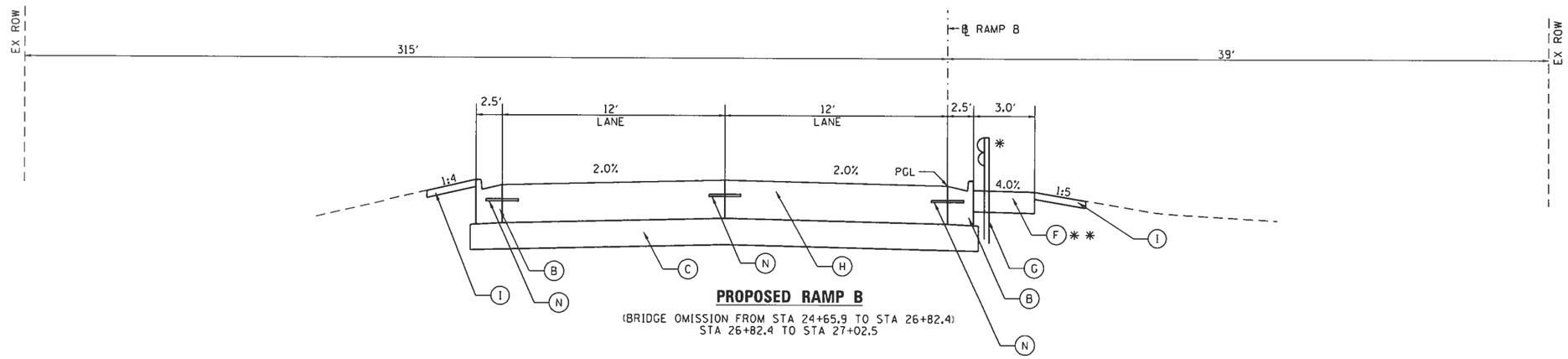

PROPOSED RAMP B

(BRIDGE OMISSION FROM STA 24+65.9 TO STA 26+82.4)
STA 26+82.4 TO STA 27+02.5

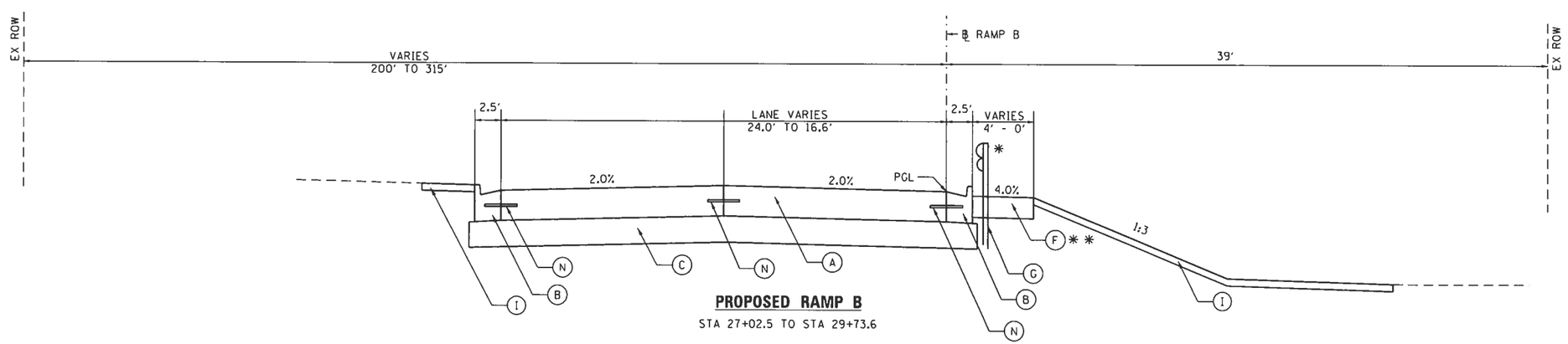

PROPOSED RAMP B

STA 27+02.5 TO STA 29+73.6

LEGEND

- (A) PORTLAND CEMENT CONCRETE PAVEMENT 10¼" (JOINTED)
- (B) COMBINATION CONCRETE CURB & GUTTER, TYPE B-6.24
- (C) AGGREGATE SUBGRADE IMPROVEMENT 12" (TYP.)
- (D) HMA DRIVEWAY PAVEMENT 8"
- (E) DEPRESSED CURB AND GUTTER
- (F) AGGREGATE SHOULDERS TYPE B 8"
- (G) STEEL PLATE BEAM GUARDRAIL TYPE A 6' POSTS
- (H) PAVEMENT CONNECTOR (PCC) W/ WELDED WIRE REINFORCEMENT 15"
- (I) EXCAVATE & PLACE TOPSOIL, 4" W/ EROSION CONTROL BLANKET & CLASS 2A SEEDING
- (J) PORTLAND CEMENT CONCRETE SHOULDER 10¼"
- (K) CONCRETE MEDIAN, TYPE SB-6.12
- (L) HOT-MIX ASPHALT SURFACE COURSE MIX "D" N50, 2"
- (M) PORTLAND CEMENT CONCRETE BASE COURSE WIDENING, 10"
- (N) EPOXY COAST. DEFORMED, NO. 6 TIE BARS, 24" LONG @ 24" C-C. COST INCIDENTAL TO PCC PAVEMENT
- (O) PREFORMED BOND BREAKER EXPANSION JOINT

GUARDRAIL LIMITS

* STA 26+81.8 TO STA 28+77.1

AGGREGATE SHOULDER LIMITS

* * STA 26+81.3 TO STA 29+06.9

NOTE

PAVEMENT CONNECTOR (PCC) W/ WELDED WIRE REINFORCEMENT 15" (ITEM H) IS REPRESENTED TO BE THICKER THAN PORTLAND CEMENT CONCRETE PAVEMENT 10¼" (ITEM A). SECTIONS INCLUDING ITEM H SHALL SACRIFICE APPROXIMATELY 3" OF AGGREGATE SUBGRADE IMPROVEMENT (ITEM C) IN ORDER TO MAINTAIN A TYPICAL ROADWAY SECTION THICKNESS OF 22¼".

PLAN	BY	DATE
SURVEYED		
PLOTTED		
ALIGMENT CHECKED		
RT. OF WAY MARKED		
CADD FILE NAME		
NOTE BOOK NO.		

PROFILE	BY	DATE
SURVEYED		
PLOTTED		
GRADES CHECKED		
B.M. NOTED		
STRUCTURE NOTATNS CHKD		
NOTE BOOK NO.		

FILE NAME = 60D77_sht_typ_pr_rampB_03.dgn

Wight

USER NAME = untitled	DESIGNED KMB	REVISED
	DRAWN CJF	REVISED
PLOT SCALE = 20.0000 ' / in.	CHECKED	REVISED
PLOT DATE = 7/3/2019	DATE 7-03-2019	REVISED

STATE OF ILLINOIS
DEPARTMENT OF TRANSPORTATION

WILLOW ROAD AT DES PLAINES RIVER
PROPOSED TYPICAL SECTIONS
RAMP B

SHEET NO. 3 OF 4 SHEETS | STA. | TO STA.

F.A.P. RTE.	SECTION	COUNTY	TOTAL SHEETS	SHEET NO.
305	15161-1	COOK	149	20
		CONTRACT NO. 60D77		

FED. ROAD DIST. NO. | ILLINOIS | FED. AID PROJECT

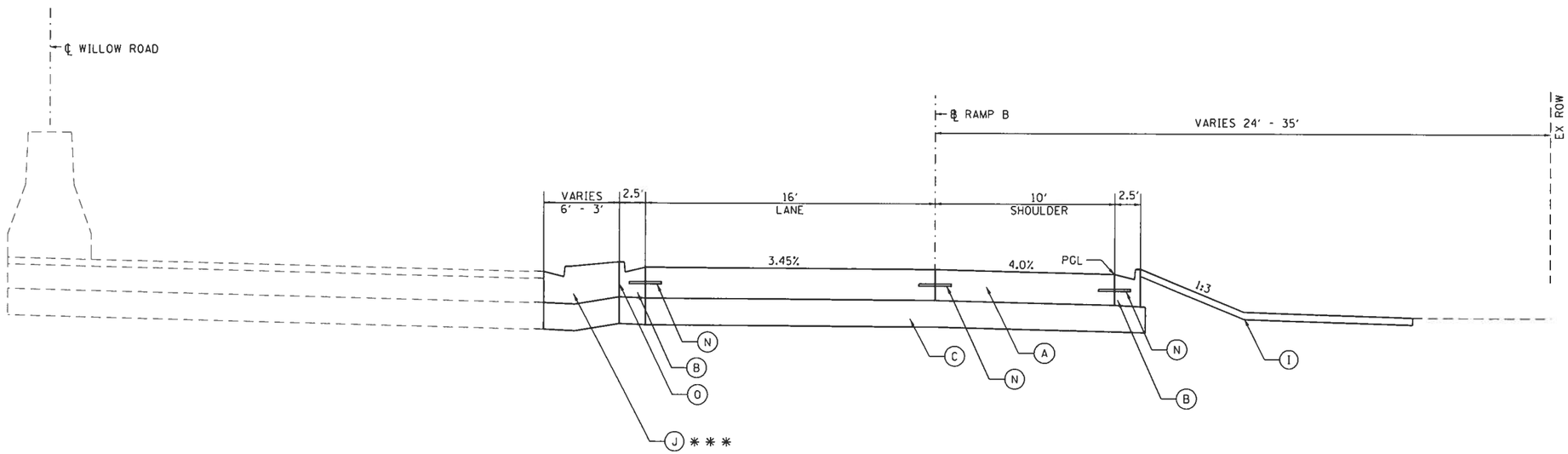

PROPOSED RAMP B

STA 29+73.6 TO 37+28.8

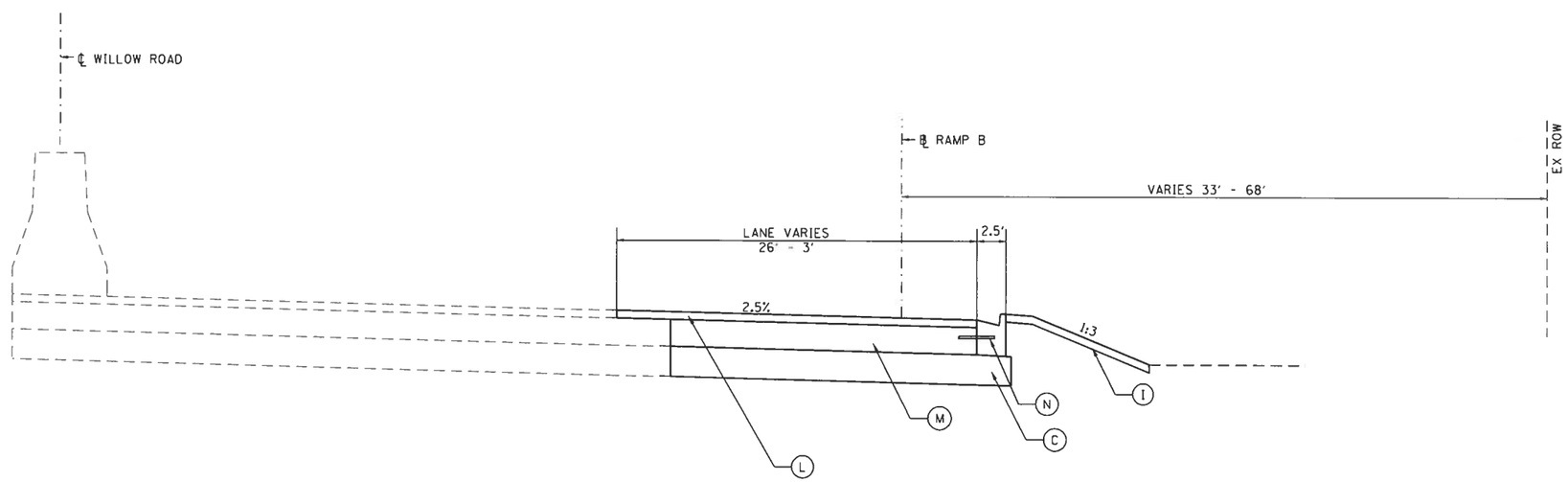

PROPOSED RAMP B

STA 37+28.8 TO 40+64.3

LEGEND

- (A) PORTLAND CEMENT CONCRETE PAVEMENT 10¼" (JOINTED)
- (B) COMBINATION CONCRETE CURB & GUTTER, TYPE B-6.24
- (C) AGGREGATE SUBGRADE IMPROVEMENT 12" (TYP.)
- (D) HMA DRIVEWAY PAVEMENT 8"
- (E) DEPRESSED CURB AND GUTTER
- (F) AGGREGATE SHOULDERS TYPE B 8"
- (G) STEEL PLATE BEAM GUARDRAIL TYPE A 6' POSTS
- (H) PAVEMENT CONNECTOR (PCC) W/ WELDED WIRE REINFORCEMENT 15"
- (I) EXCAVATE & PLACE TOPSOIL, 4" W/ EROSION CONTROL BLANKET & CLASS 2A SEEDING
- (J) PORTLAND CEMENT CONCRETE SHOULDER 10¼"
- (K) CONCRETE MEDIAN, TYPE SB-6.12
- (L) HOT-MIX ASPHALT SURFACE COURSE MIX "D" N50, 2"
- (M) PORTLAND CEMENT CONCRETE BASE COURSE WIDENING, 10"
- (N) EPOXY COAST, DEFORMED, NO. 6 TIE BARS, 24" LONG @ 24" C-C, COST INCIDENTAL TO PCC PAVEMENT
- (O) PREFORMED BOND BREAKER EXPANSION JOINT

GUARDRAIL LIMITS

* STA 26+81.8 TO STA 28+77.1

AGGREGATE SHOULDER LIMITS

** STA 26+81.3 TO STA 29+06.9

CONCRETE MEDIAN LIMITS

*** STA 34+87.7 TO STA 37+80.4

PLAN		BY	DATE
	SURVEYED		
	PLOTTED		
	ALIGNMENT CHECKED		
	RT. OF WAY CHECKED		
NOTE BOOK	CADD FILE NAME		
NO.			

PROFILE		BY	DATE
	SURVEYED		
	PLOTTED		
	GRADES CHECKED		
	B.M. NOTED		
NOTE BOOK	STRUCTURE NOTATIONS CHKD		
NO.			

FILE NAME = 60D77_sht_typ_pr_rampB_04.dgn

Wight	USER NAME = untitled	DESIGNED KMB	REVISED
		DRAWN CJF	REVISED
	PLOT SCALE = 20.0000 ' / in.	CHECKED	REVISED
	PLOT DATE = 7/3/2019	DATE 7-03-2019	REVISED

STATE OF ILLINOIS
DEPARTMENT OF TRANSPORTATION

WILLOW ROAD AT DES PLAINES RIVER
PROPOSED TYPICAL SECTIONS
RAMP B

SHEET NO. 4 OF 4 SHEETS | STA. | TO STA.

F.A.P. RTE.	SECTION	COUNTY	TOTAL SHEETS	SHEET NO.
305	15161-1	COOK	149	21
		CONTRACT NO. 60D77		
FED. ROAD DIST. NO.	ILLINOIS	FED. AID PROJECT		

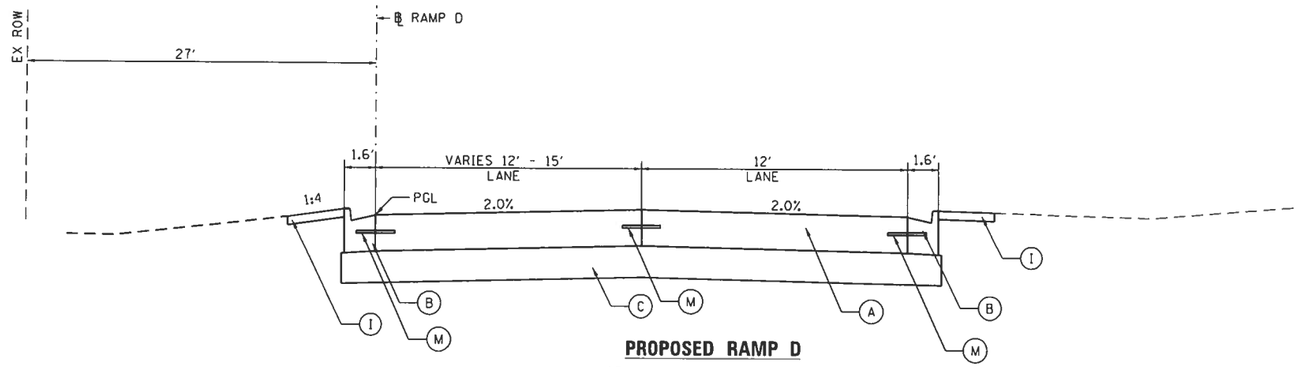

PROPOSED RAMP D

STA 50+84.5 TO STA 50+94.2

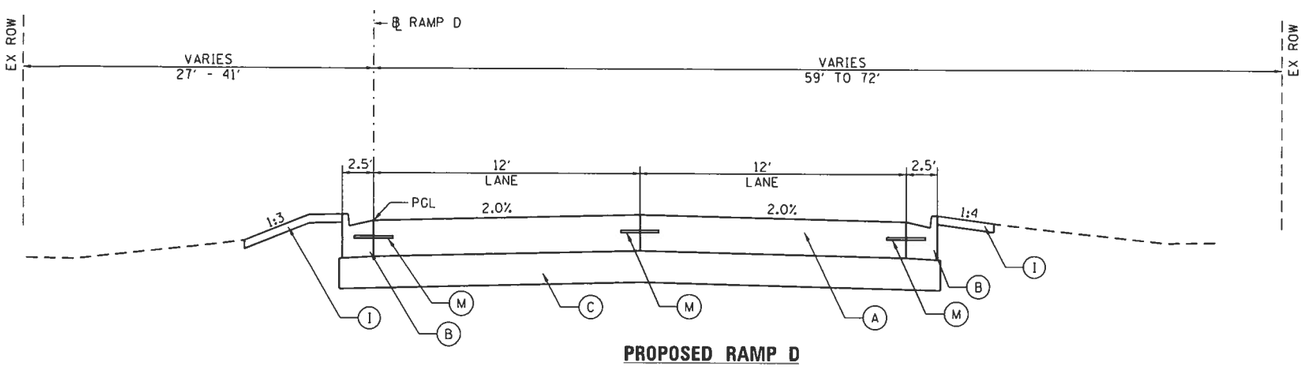

PROPOSED RAMP D

STA 50+94.2 TO STA 55+93.0

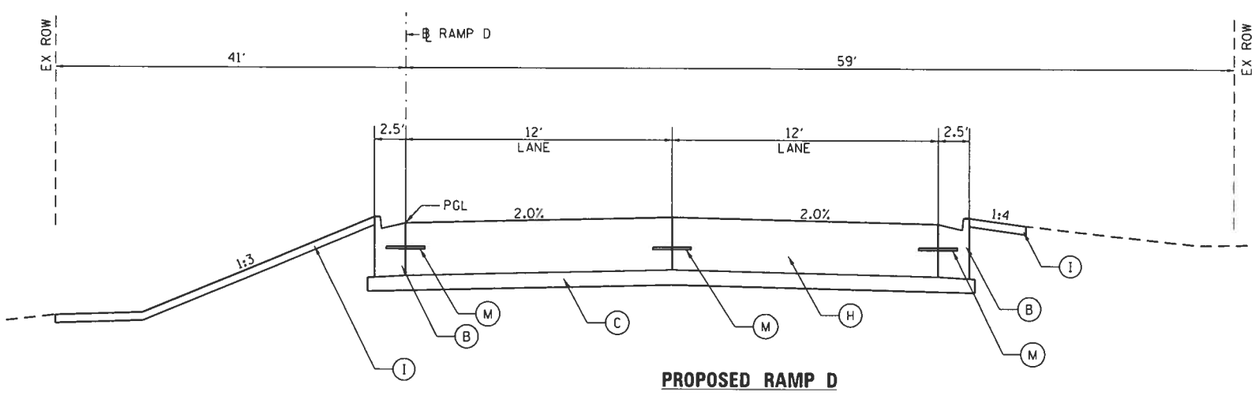

PROPOSED RAMP D

STA 55+93.0 TO 56+08.0
(BRIDGE OMISSION FROM 56+08.0 TO STA 58+29.0)

LEGEND

- (A) PORTLAND CEMENT CONCRETE PAVEMENT 10¼" (JOINTED)
- (B) COMBINATION CONCRETE CURB & GUTTER, TYPE B-6.24
- (C) AGGREGATE SUBGRADE IMPROVEMENT 12" (TYP.)
- (D) HMA DRIVEWAY PAVEMENT 8"
- (E) DEPRESSED CURB AND GUTTER
- (F) AGGREGATE SHOULDERS TYPE B 8"
- (G) STEEL PLATE BEAM GUARDRAIL TYPE A 6' POSTS
- (H) PAVEMENT CONNECTOR (PCC) W/ WELDED WIRE REINFORCEMENT 15"
- (I) EXCAVATE & PLACE TOPSOIL, 4" W/ EROSION CONTROL BLANKET & CLASS 2A SEEDING
- (J) PORTLAND CEMENT CONCRETE SHOULDER 10¼"
- (K) HOT-MIX ASPHALT SURFACE COURSE MIX "D" N50, 2"
- (L) PORTLAND CEMENT CONCRETE BASE COURSE WIDENING, 10"
- (M) EPOXY COAST, DEFORMED, NO. 6 TIE BARS, 24" LONG @ 24" C-C. COST INCIDENTAL TO PCC PAVEMENT
- (N) PREFORMED BOND BREAKER EXPANSION JOINT

NOTE

PAVEMENT CONNECTOR (PCC) W/ WELDED WIRE REINFORCEMENT 15" (ITEM H) IS REPRESENTED TO BE THICKER THAN PORTLAND CEMENT CONCRETE PAVEMENT 10¼" (ITEM A). SECTIONS INCLUDING ITEM H SHALL SACRIFICE APPROXIMATELY 3" OF AGGREGATE SUBGRADE IMPROVEMENT (ITEM C) IN ORDER TO MAINTAIN A TYPICAL ROADWAY SECTION THICKNESS OF 22¼".

PLAN		BY	DATE
SURVEYED			
PLOTTED			
ALIGNMENT CHECKED			
RT. OF WAY CHECKED			
CADD FILE NAME			
NOTE BOOK NO.			

PROFILE		BY	DATE
SURVEYED			
PLOTTED			
GRADES CHECKED			
BM NOTED			
STRUCTURE NOTATIONS CHKED			
NOTE BOOK NO.			

FILE NAME = 60D77_sht_typ_pr_rampD_01.dgn

Wight

USER NAME = Untitled	DESIGNED KMB	REVISED
	DRAWN CJF	REVISED
PLOT SCALE = 20.0000 ' / in.	CHECKED	REVISED
PLOT DATE = 7/3/2019	DATE 7-03-2019	REVISED

STATE OF ILLINOIS
DEPARTMENT OF TRANSPORTATION

WILLOW ROAD AT DES PLAINES RIVER
PROPOSED TYPICAL SECTIONS
RAMP D

SHEET NO. 1 OF 3 SHEETS | STA. | TO STA.

F.A.P. RTE.	SECTION	COUNTY	TOTAL SHEETS	SHEET NO.
305	15161-1	COOK	149	22
		CONTRACT NO. 60D77		
FED. ROAD DIST. NO.	ILLINOIS	FED. AID PROJECT		

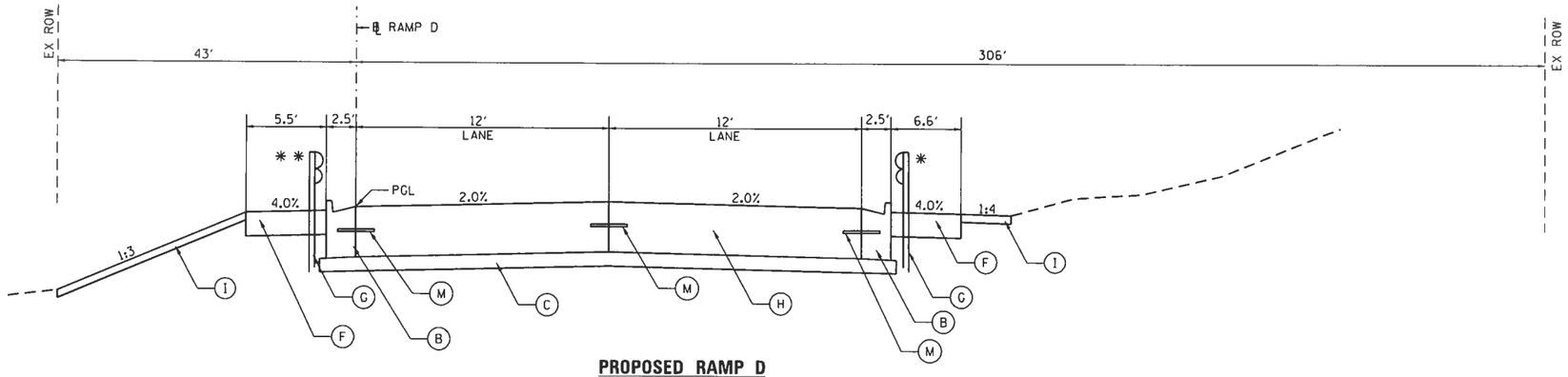

PROPOSED RAMP D

(BRIDGE OMISSION FROM 56+08.0 TO STA 58+29.0)
STA 58+29.0 TO 58+44.0

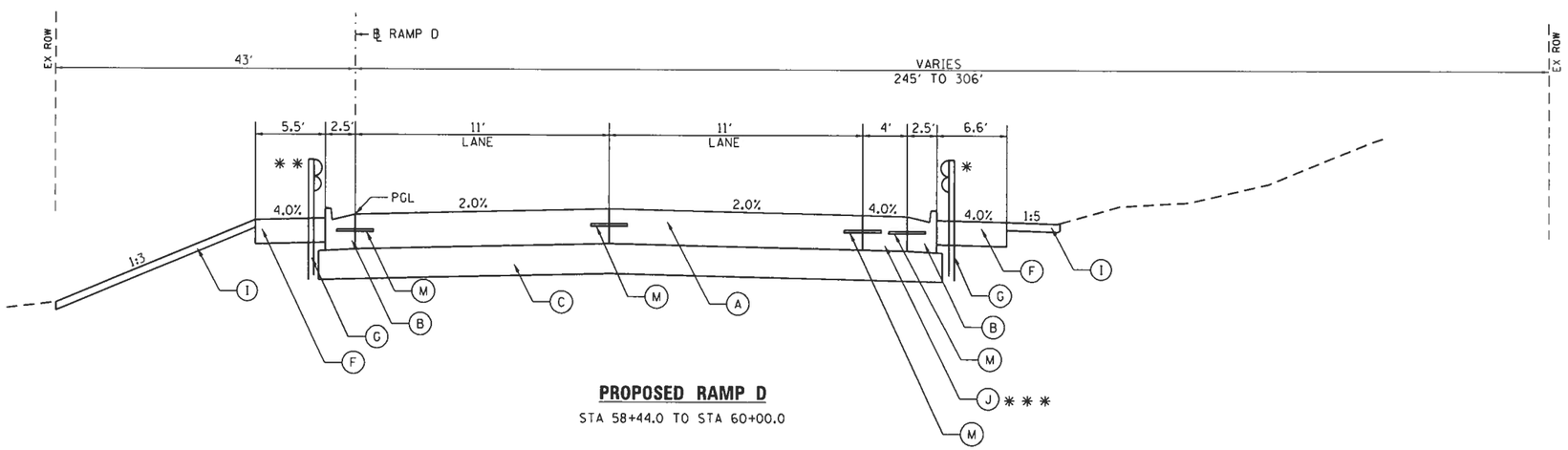

PROPOSED RAMP D

STA 58+44.0 TO STA 60+00.0

LEGEND

- (A) PORTLAND CEMENT CONCRETE PAVEMENT 10¼" (JOINTED)
- (B) COMBINATION CONCRETE CURB & GUTTER, TYPE B-6.24
- (C) AGGREGATE SUBGRADE IMPROVEMENT 12" (TYP.)
- (D) HMA DRIVEWAY PAVEMENT 8"
- (E) DEPRESSED CURB AND GUTTER
- (F) AGGREGATE SHOULDERS TYPE B 8"
- (G) STEEL PLATE BEAM GUARDRAIL TYPE A 6' POSTS
- (H) PAVEMENT CONNECTOR (PCC) W/ WELDED WIRE REINFORCEMENT 15"
- (I) EXCAVATE & PLACE TOPSOIL, 4" W/ EROSION CONTROL BLANKET & CLASS 2A SEEDING
- (J) PORTLAND CEMENT CONCRETE SHOULDER 10¼"
- (K) HOT-MIX ASPHALT SURFACE COURSE MIX "D" N50, 2"
- (L) PORTLAND CEMENT CONCRETE BASE COURSE WIDENING, 10"
- (M) EPOXY COAST, DEFORMED, NO. 6 TIE BARS, 24" LONG @ 24" C-C. COST INCIDENTAL TO PCC PAVEMENT
- (N) PREFORMED BOND BREAKER EXPANSION JOINT

GUARDRAIL LIMITS

* STA 58+14.0 TO STA 60+69.4

* * STA 58+26.5 TO STA 60+49.7

PCC SHOULDER LIMITS

* * * STA 58+54.7 TO STA 61+02.0

NOTE

PAVEMENT CONNECTOR (PCC) W/ WELDED WIRE REINFORCEMENT 15" (ITEM H) IS REPRESENTED TO BE THICKER THAN PORTLAND CEMENT CONCRETE PAVEMENT 10¼" (ITEM A). SECTIONS INCLUDING ITEM H SHALL SACRIFICE APPROXIMATELY 3" OF AGGREGATE SUBGRADE IMPROVEMENT (ITEM C) IN ORDER TO MAINTAIN A TYPICAL ROADWAY SECTION THICKNESS OF 22¼".

PLAN — SURVEYED / PLOTTED / ALIGNMENT CHECKED / DTM CHECKED / CADD FILE NAME / NOTE BOOK NO. / BY / DATE

PROFILE — SURVEYED / PLOTTED / GRADES CHECKED / BLA NOTES / STRUCTURE NOTATNS CHKD / NOTE BOOK NO. / BY / DATE

FILE NAME = 60D77_sht_typ_pr_ramp0 02.dgn

Wight	USER NAME = untitled	DESIGNED KMB	REVISED
		DRAWN CJF	REVISED
	PLOT SCALE = 20.0000 ' / in.	CHECKED	REVISED
	PLOT DATE = 7/3/2019	DATE 7-03-2019	REVISED

STATE OF ILLINOIS
DEPARTMENT OF TRANSPORTATION

WILLOW ROAD AT DES PLAINES RIVER
PROPOSED TYPICAL SECTIONS
RAMP D

SHEET NO. 2 OF 3 SHEETS | STA. | TO STA.

F.A.P. RTE.	SECTION	COUNTY	TOTAL SHEETS	SHEET NO.
305	15161-1	COOK	149	23
		CONTRACT NO. 60D77		
FED. ROAD DIST. NO.	ILLINOIS	FED. AID PROJECT		

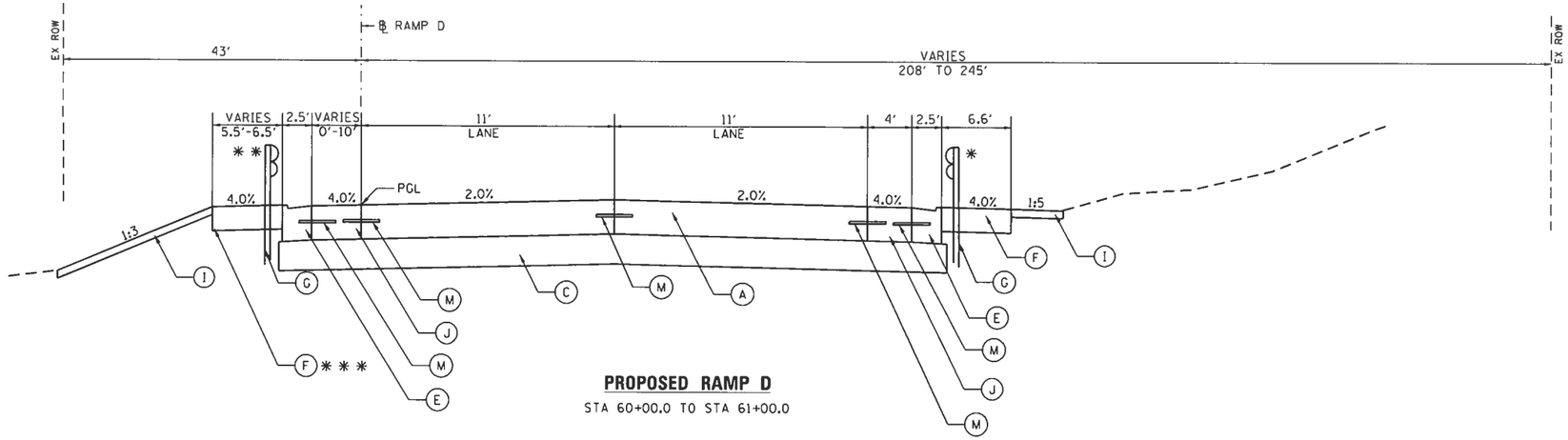

PROPOSED RAMP D

STA 60+00.0 TO STA 61+00.0

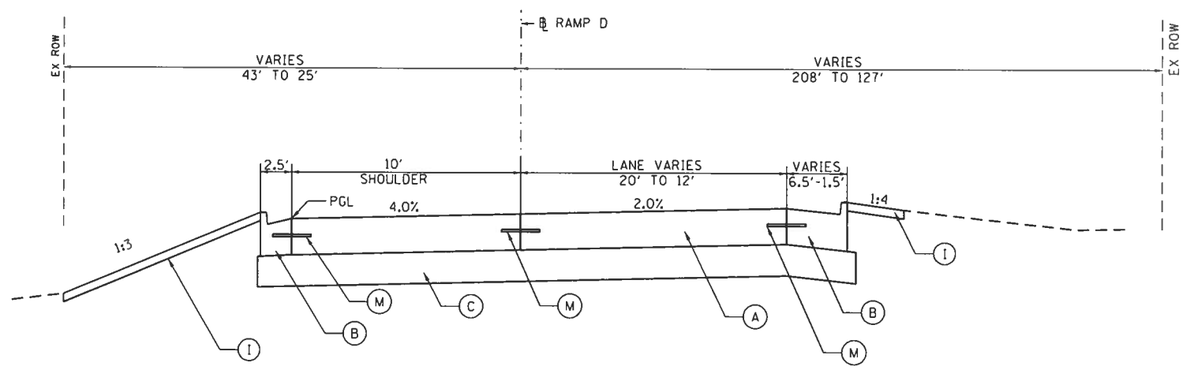

PROPOSED RAMP D

STA 61+00.0 TO STA 66+49.9

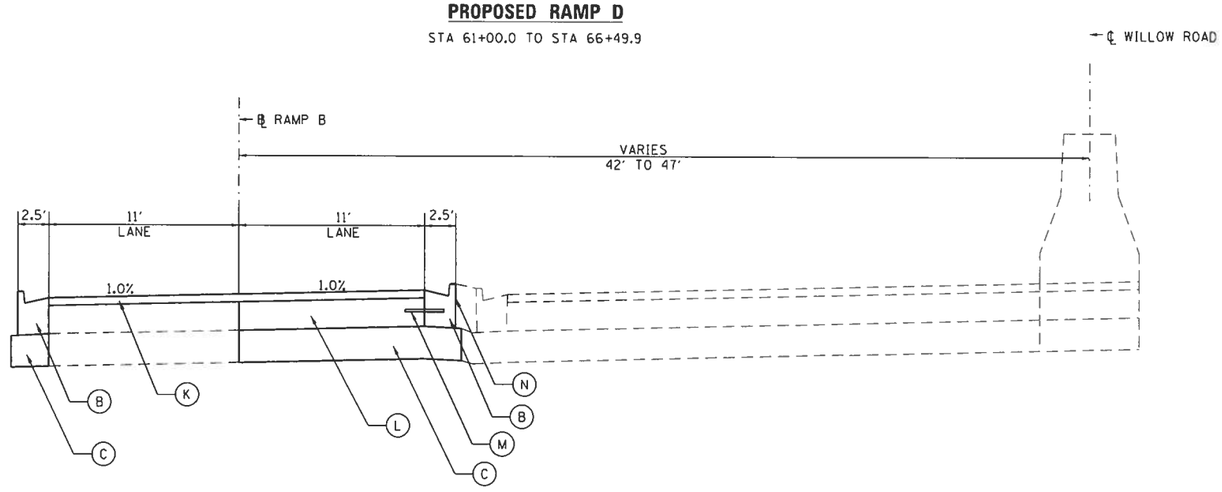

PROPOSED RAMP D

STA 66+49.9 TO STA 68+20.6

LEGEND

- (A) PORTLAND CEMENT CONCRETE PAVEMENT 10¼" (JOINTED)
- (B) COMBINATION CONCRETE CURB & GUTTER, TYPE B-6.24
- (C) AGGREGATE SUBGRADE IMPROVEMENT 12" (TYP.)
- (D) HMA DRIVEWAY PAVEMENT 8"
- (E) DEPRESSED CURB AND GUTTER
- (F) AGGREGATE SHOULDERS TYPE B 8"
- (G) STEEL PLATE BEAM GUARDRAIL TYPE A 6' POSTS
- (H) PAVEMENT CONNECTOR (PCC) W/ WELDED WIRE REINFORCEMENT 15"
- (I) EXCAVATE & PLACE TOPSOIL, 4" W/ EROSION CONTROL BLANKET & CLASS 2A SEEDING
- (J) PORTLAND CEMENT CONCRETE SHOULDER 10¼"
- (K) HOT-MIX ASPHALT SURFACE COURSE MIX "D" N50, 2"
- (L) PORTLAND CEMENT CONCRETE BASE COURSE WIDENING, 10"
- (M) EPOXY COAST, DEFORMED, NO. 6 TIE BARS, 24" LONG @ 24" C-C. COST INCIDENTAL TO PCC PAVEMENT
- (N) PREFORMED BOND BREAKER EXPANSION JOINT

GUARDRAIL LIMITS

* STA 58+14.0 TO STA 60+69.4

** STA 58+26.5 TO STA 60+49.7

AGGREGATE SHOULDER LIMITS

*** STA 58+29.0 TO STA 60+67.9

PLAN		BY	DATE
NOTE BOOK NO.	SURVEYED		
	PLOTTED		
	ALIGNMENT CHECKED		
	RT/W PLAN CHECKED		
	CADD FILE NAME		

PROFILE		BY	DATE
NOTE BOOK NO.	SURVEYED		
	PLOTTED		
	GRADES CHECKED		
	B.M. NOTED		
	STRUCTURE NOTAT'NS CHKD		

FILE NAME = 60D77 sht_typ_pr_ramp0.03.dgn

Wight

USER NAME = untitled	DESIGNED KMB	REVISED
	DRAWN CJF	REVISED
PLOT SCALE = 20.0000 ' / in.	CHECKED	REVISED
PLOT DATE = 7/3/2019	DATE 7-03-2019	REVISED

STATE OF ILLINOIS
DEPARTMENT OF TRANSPORTATION

WILLOW ROAD AT DES PLAINES RIVER
PROPOSED TYPICAL SECTIONS
RAMP D

SHEET NO. 3 OF 3 SHEETS | STA. | TO STA.

F.A.P. RTE.	SECTION	COUNTY	TOTAL SHEETS	SHEET NO.
305	15161-1	COOK	149	24
		CONTRACT NO. 60D77		
FED. ROAD DIST. NO.	ILLINOIS	FED. AID PROJECT		

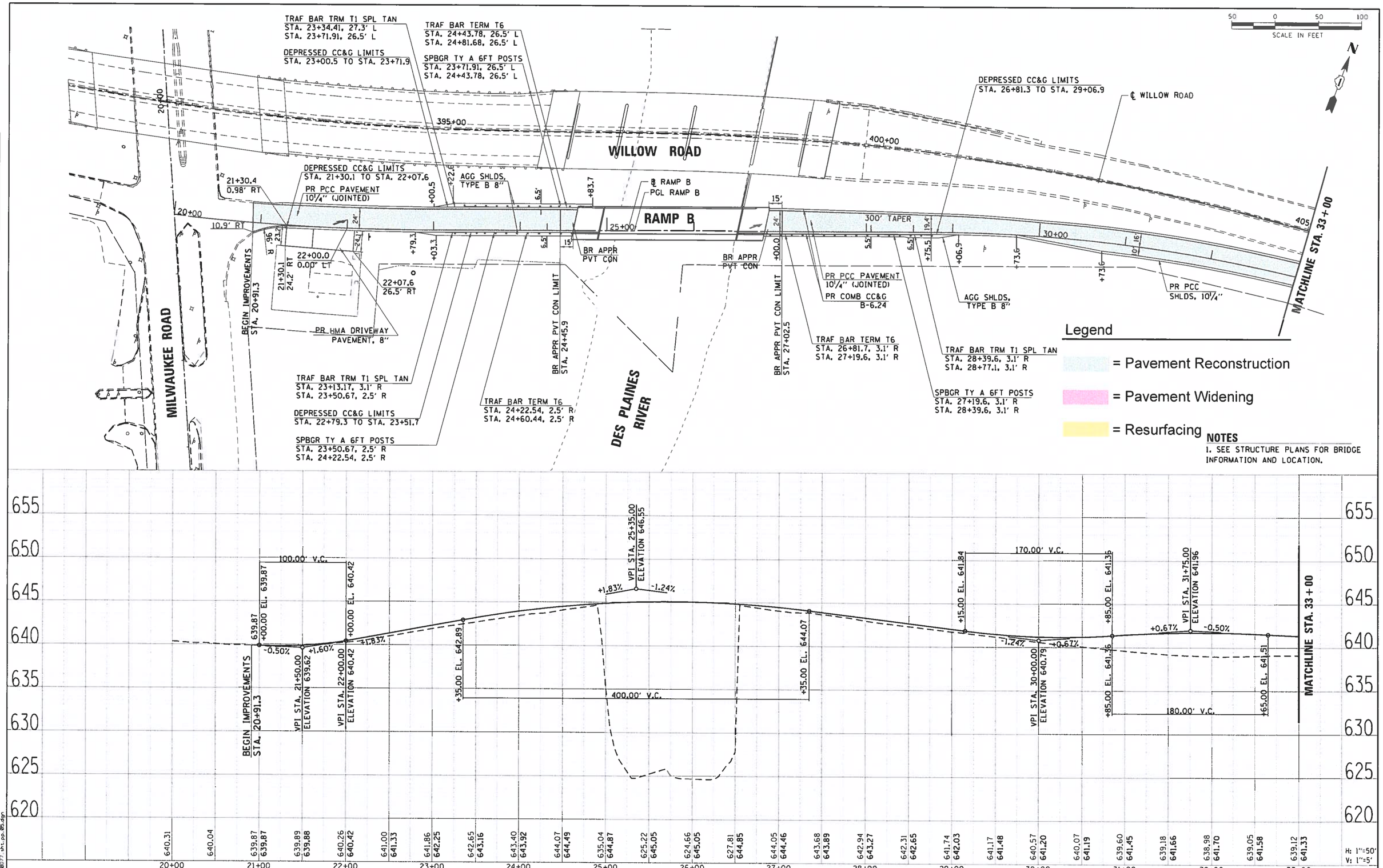

NOTES

1. SEE STRUCTURE PLANS FOR BRIDGE INFORMATION AND LOCATION.

PLAN — SURVEYED / PLOTTED / ALIGNMENT CHECKED / RIGHT OF WAY MARKED / CADD FILE NAME / NOTE BOOK NO. / BY / DATE

PROFILE — SURVEYED / PLOTTED / GRADES CHECKED / B.M. NOTED / STRUCTURE NOTATIONS CHKD / NOTE BOOK NO. / BY / DATE

FILE NAME = 60D77_sht_pp_05.dgn

Wight

USER NAME = untitled	DESIGNED KMB	REVISED	
	DRAWN CJF	REVISED	
PLOT SCALE = 100.0000 ' / in.	CHECKED	REVISED	
PLOT DATE = 7/3/2019	DATE 7-03-2019	REVISED	

STATE OF ILLINOIS
DEPARTMENT OF TRANSPORTATION

WILLOW ROAD AT DES PLAINES RIVER
PLAN & PROFILE
RAMP B

SCALE: 1" = 50' | SHEET NO. 1 OF 2 SHEETS | STA. 20+00 TO STA. 33+00

F.A.P. RTE.	SECTION	COUNTY	TOTAL SHEETS	SHEET NO.
305	15161-1	COOK	149	40
		CONTRACT NO. 60D77		

FED. ROAD DIST. NO. | ILLINOIS | FED. AID PROJECT

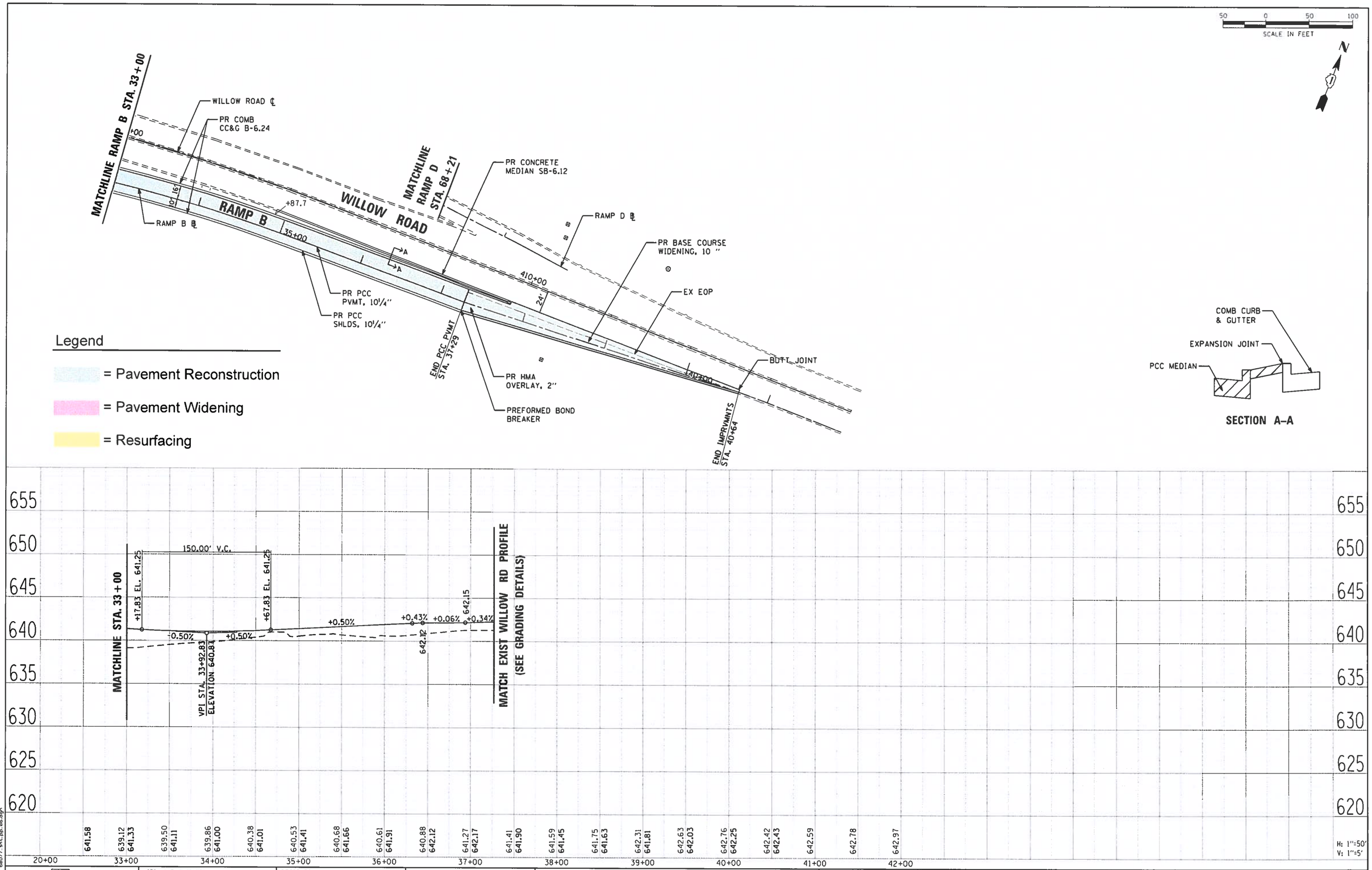

PLAN — SURVEYED / PLOTTED / ALIGNMENT CHECKED / RT. OF WAY CHECKED / CADD FILE NAME — NOTE BOOK NO. — BY — DATE

PROFILE — SURVEYED / PLOTTED / GRADES CHECKED / B.M. NOTED / STRUCTURE NOTATIONS CHKD — NOTE BOOK NO. — BY — DATE

FILE NAME = 60D77_sht_pp_06.dgn

Wight	USER NAME = untitled	DESIGNED KMB	REVISED
		DRAWN CJF	REVISED
	PLOT SCALE = 100.0000 ' / in.	CHECKED	REVISED
	PLOT DATE = 7/3/2019	DATE 7-03-2019	REVISED

STATE OF ILLINOIS
DEPARTMENT OF TRANSPORTATION

WILLOW ROAD AT DES PLAINES RIVER
PLAN & PROFILE
RAMP B

SCALE: 1" = 50' | SHEET NO. 2 OF 2 SHEETS | STA. 33+00 TO STA. 42+00

F.A.P. RTE.	SECTION	COUNTY	TOTAL SHEETS	SHEET NO.
305	15161-1	COOK	149	41

CONTRACT NO. 60D77

FED. ROAD DIST. NO. | ILLINOIS | FED. AID PROJECT

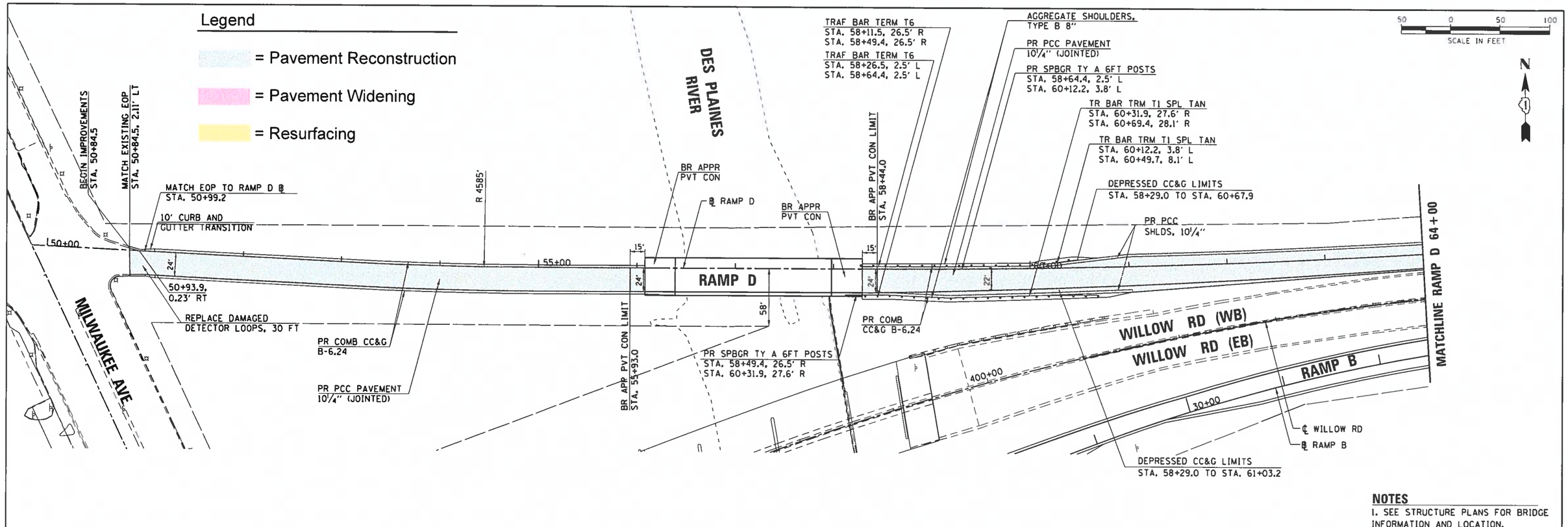

NOTES

1. SEE STRUCTURE PLANS FOR BRIDGE INFORMATION AND LOCATION.

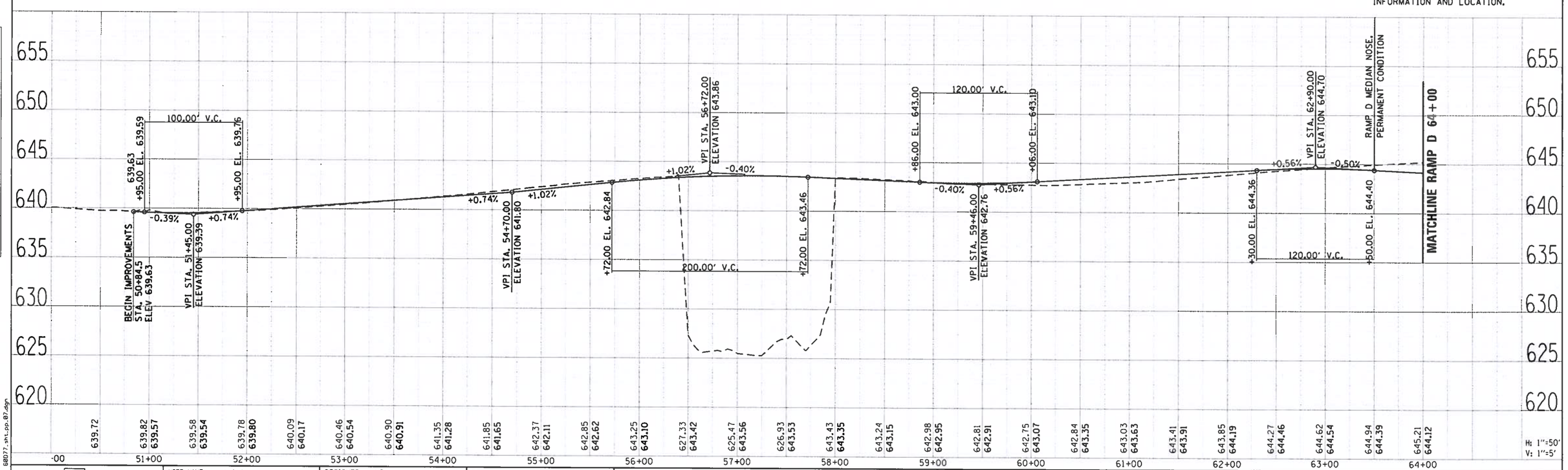

Wight	USER NAME = untitled	DESIGNED KMB	REVISED
		DRAWN CJF	REVISED
	PLOT SCALE = 100.0000 ' / in.	CHECKED	REVISED
	PLOT DATE = 7/3/2019	DATE 7-03-2019	REVISED

STATE OF ILLINOIS
DEPARTMENT OF TRANSPORTATION

WILLOW ROAD AT DES PLAINES RIVER
PLAN & PROFILE
RAMP D

SCALE: 1" = 50' | SHEET NO. 1 OF 2 SHEETS | STA. 52+06 TO STA. 64+00

F.A.P. RTE.	SECTION	COUNTY	TOTAL SHEETS	SHEET NO.
305	15161-1	COOK	149	42
		CONTRACT NO. 60D77		
FED. ROAD DIST. NO.	ILLINOIS	FED. AID PROJECT		

PLAN: SURVEYED, PLOTTED, ALIGNMENT CHECKED, BLUE TOP CHECKED, CADD FILE NAME, NOTE BOOK NO., BY, DATE

PROFILE: SURVEYED, PLOTTED, GRADES CHECKED, BLUE TOP CHECKED, STRUCTURE NOTATNS CHKD, NOTE BOOK NO., BY, DATE

FILE NAME = 60D77_sht_pp_07.dgn

Legend

= Pavement Reconstruction

= Pavement Widening

= Resurfacing

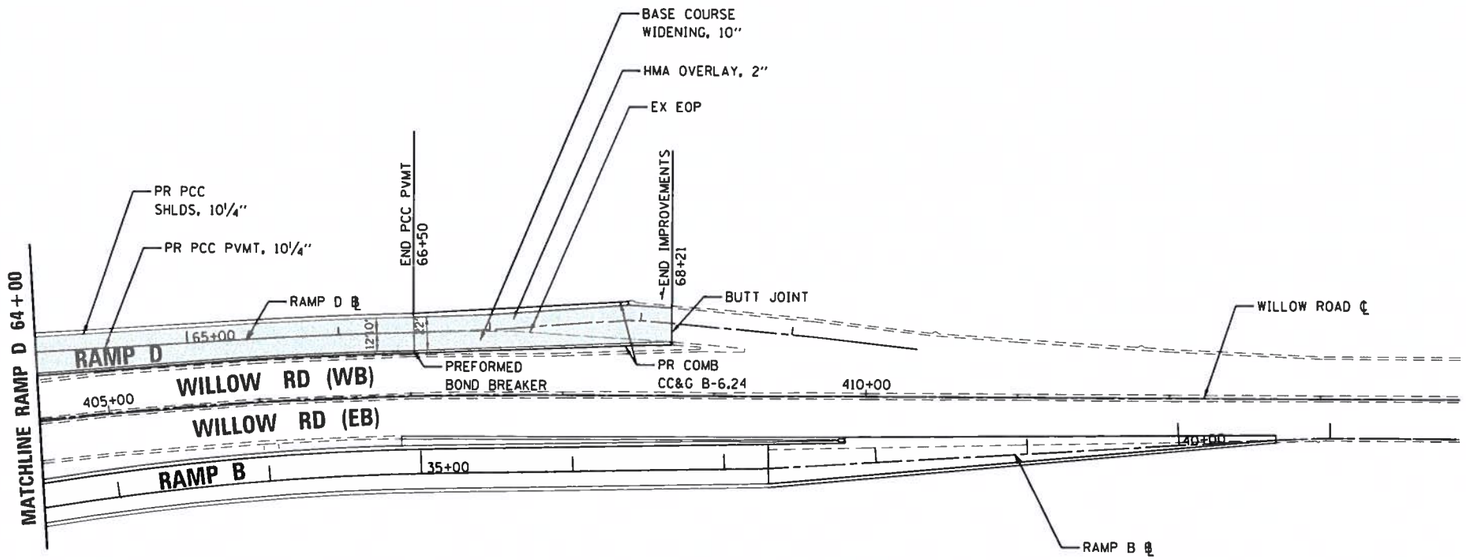

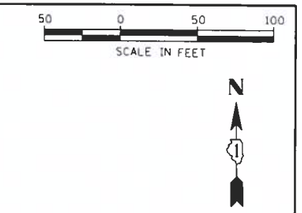

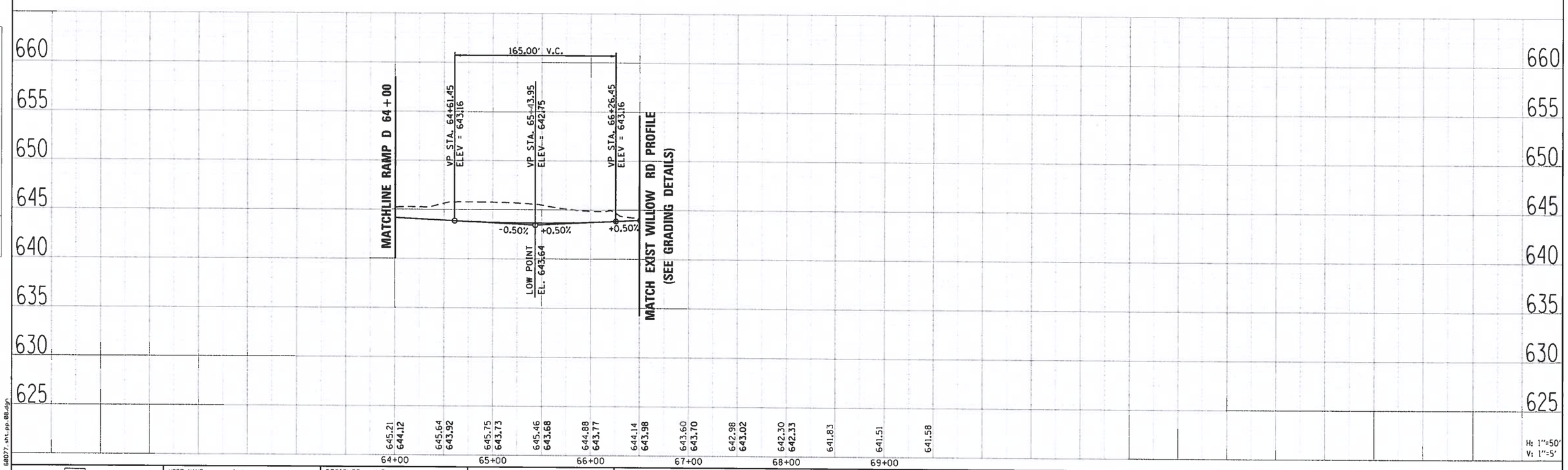

PLAN	BY	DATE
SURVEYED		
PLOTTED		
ALIGNMENT CHECKED		
RIGHT OF WAY CHECKED		
CADD FILE NAME		
NOTE BOOK NO.		

PROFILE	BY	DATE
SURVEYED		
PLOTTED		
GRADES CHECKED		
RIGHT OF WAY CHECKED		
STRUCTURE NOTATIONS CHKD		
NOTE BOOK NO.		

FILE NAME = 68D77_sht_pp_08.dgn

Wight

USER NAME = untitled	DESIGNED KMB	REVISED
	DRAWN CJF	REVISED
PLOT SCALE = 100.0000 ' / in.	CHECKED	REVISED
PLOT DATE = 7/3/2019	DATE 7-03-2019	REVISED

STATE OF ILLINOIS
DEPARTMENT OF TRANSPORTATION

WILLOW ROAD AT DES PLAINES RIVER
PLAN & PROFILE
RAMP D

SCALE: 1" = 50' | SHEET NO. 2 OF 2 SHEETS | STA. 64+00 TO STA. 69+00

F.A.P. RTE.	SECTION	COUNTY	TOTAL SHEETS	SHEET NO.
305	15161-1	COOK	149	43
		CONTRACT NO. 60D77		

FED. ROAD DIST. NO. | ILLINOIS | FED. AID PROJECT

PROJECT AND TRAFFIC INPUTS

(Enter Data in Gray Shaded Cells)

Route: Willow Road (Mainline)
Section: 1516I-1
County: Cook
Location: Willow Road at IL 21

Comments: Future Contract (Mainline Recon)
Advance Contract of Ramps

Design Date: 08/26/2019 ONP <-- BY
Modify Date: 12/02/2019 ONP <-- BY

	ADT	Year
Current:	44,000	2018
Future:	60,000	2040

Facility Type: Other Marked State Route
# of Lanes = 6 or more

Road Class: I
Rural or Urban ? Urban
Subgrade Support Rating (SSR): Poor
Construction Year: 2021
Design Period (DP) = 20 years

	Minimum ADT	Structural Design Traffic Actual ADT	Actual %of Total ADT	% of ADT in Design Lane	
PV =	0	48,430	90.6%	P =	8%
SU =	250	2,780	5.2%	S =	37%
MU =	750	2,245	4.2%	M =	37%
Struct. Design ADT =		53,455	(2031)		

TRAFFIC FACTOR CALCULATION

FLEXIBLE PAVEMENT

Cpv = 0.15
Csu = 132.5
Cmu = 482.53
TF flexible (Actual) = 10.75 (Actual ADT)
TF flexible (Min) = 2.92 (Min ADT Fig. 54-2.C)

RIGID PAVEMENT

Cpv = 0.15
Csu = 143.81
Cmu = 696.42
TF rigid (Actual) = 14.54 (Actual ADT)
TF rigid (Min) = 4.13 (Min ADT Fig. 54-2.C)

NEW CONSTRUCTION / RECONSTRUCTION PAVEMENT DESIGN CALCULATIONS

Full-Depth HMA Pavement

Use TF flexible = 10.75
PG Grade Lower Binder Lifts = PG 64-22 (Fig. 53-4.R)
Goto Map — HMA Mixture Temp. = 73.5 deg. F (Fig. 54-5.C)
Design HMA Mixture Modulus (E_{HMA}) = 740 ksi (Fig. 54-5.D)
Design HMA Strain (ε_{HMA}) = 61 (Fig. 54-5.E)
Full Depth HMA Design Thickness = 12.00 in. (Fig. 54-5.F)
Goto Map — Limiting Strain Criterion Thickness = 14.50 in. (Fig. 54-5.I)
Use Full-Depth HMA Thickness = 12.00 inches

JPC Pavement

Use TF rigid = 14.54
Edge Support = Tied Shoulder or C.&G.
Rigid Pavt Thick. = 10.25 in. (Fig. 54-4.E)

CRC Pavement

Use TF rigid = 14.54
IBR value = 3
CRCP Thickness = 9.50 in. (Fig. 54-4.M)

TF MUST BE > 60 FOR CRCP

RECONSTRUCTION ONLY (SUPPLEMENTAL) PAVEMENT DESIGN CALCULATIONS

HMA Overlay of Rubblized PCC

Use TF flexible = 10.75
Goto Map — HMA Overlay Design Thickness = 9.50 in. (Fig. 54-5.U)
Limiting Strain Criterion Thickness = in. (Fig. 54-5.V)
Use HMA Overlay Thickness = 999.00 inches

Unbonded Concrete Overlay

Review 54-4.03 for limitations and special considerations.

JPCP Thickness = NA inches

CONTACT BMPR FOR ASSISTANCE

DESIGN TABLES FROM BDE MANUAL CHAPTER 54 - PAVEMENT DESIGN

Class I Roads	Class II Roads	Class III Roads	Class IV Roads
4 lanes or more Part of a future 4 lanes or more One-way Streets with ADT > 3500	2 lanes with ADT > 2000 One way Street with ADT <= 3500	2 Lanes (ADT 750 -2000)	2 Lanes (ADT < 750)

Facility Type	Min. Str. Design Traffic (Fig 54-2.C) PV	SU	MU
Interstate or Freeway	0	500	1500
Other Marked State Route	0	250	750
Unmarked State Route	No Min	No Min	No Min

Class Table for One-Way Streets ADT	Class
0 - 3500	II
>3501	I

Class	Traffic Factor ESAL Coefficients: Rigid (Fig. 54-4.C) Csu	Rigid Cmu	Flexible (Fig. 54-5.B) Csu	Flexible Cmu
I	143.81	696.42	132.50	482.53
II	135.78	567.21	112.06	385.44
III	129.58	562.47	109.14	384.35
IV	129.58	562.47	109.14	384.35

Class Table for 2 or 3 lanes (not future 4 lane & not one-way street) ADT	Class
0 - 749	IV
750 - 2000	III
>2000	II

Number of Lanes	Design Lane Distribution Factors For Structural Design Traffic (Fig. 54-2.B) Rural P	Rural S	Rural M	Urban P	Urban S	Urban M
1 Lane Ramp	100%	100%	100%	100%	100%	100%
2 or 3	50%	50%	50%	50%	50%	50%
4	32%	45%	45%	32%	45%	45%
6 or more	20%	40%	40%	8%	37%	37%

LIFE-CYCLE COST ANALYSIS: NEW CONSTRUCTION / RECONSTRUCTION

FULL-DEPTH HMA PAVEMENT

Standard Design

ROUTE	Willow Road
SECTION	1516I-1
COUNTY	Cook
LOCATION	Willow Road at IL 21
FACILITY TYPE	NON-INTERSTATE

PROJECT LENGTH			3625 FT	===>	0.69 Miles
# OF CENTERLINES			4 CL		
# OF LANES			6 LANES		
# OF EDGES			4 EP		
LANE WIDTH - AVERAGE			12 FT		
SHOULDER WIDTH	HMA	Inside	0 FT		
	HMA	Outside	10 FT		
	Total Width of Paved Shoulders		20 FT		

PAVEMENT THICKNESS (FLEXIBLE)	12.00 IN	14.50 IN MAX
SHOULDER THICKNESS	8.00 IN	Standard Design
POLICY OVERLAY THICKNESS	2.25 IN	

FLEX PAVEMENT TRAFFIC FACTORS	MINIMUM	ACTUAL	USE
	2.92	10.46	10.46

Read Me!

HMA COST PER TON	UNIT PRICE
HMA SURFACE	$96.62 / TON
HMA TOP BINDER	$76.44 / TON
HMA LOWER BINDER	$72.60 / TON
HMA BINDER (LEVELING)	$80.00 / TON
HMA SHOULDER	$72.00 / TON

INITIAL COSTS

ITEM	THICKNESS	100% QUANTITY	UNIT		UNIT PRICE		COST
HMA PAVEMENT (FULL-DEPTH)	(12.00")	29,000	SQ YD	*	$53.55	/ SQ YD	$1,552,950 –
HMA SURFACE COURSE	(2.00")	3,263	TONS		$96.62	/ TON	$0
HMA TOP BINDER COURSE	(2.25")	3,707	TONS		$76.44	/ TON	$0
HMA LOWER BINDER COURSE	(7.75")	13,059	TONS		$72.60	/ TON	$0
HMA SHOULDER	(8.00")	1,850	TONS	*	$72.00	/ TON	$133,200 –
CURB & GUTTER		8,000	LIN FT	*	$30.00	/ LIN FT	$240,000
SUBBASE GRAN MATL TY C (TONS)		1,087	TONS		$25.00	/ TON	$27,175
IMPROVED SUBGRADE:	Aggregate	39,472	SQ YD		$7.00	/ SQ YD	$276,304
Reserved For User Supplied Item		0	UNITS		$0.00	/ UNITS	$0
Reserved For User Supplied Item		0	UNITS		$0.00	/ UNITS	$0
PAVEMENT REMOVAL		29,000	SQ YD		$15.00	/ SQ YD	$435,000
SHOULDER REMOVAL		8,056	SQ YD		$0.00	/ SQ YD	$0

Note: * Denotes User Supplied Quantity

FLEXIBLE CONSTRUCTION INITIAL COST	$2,664,629
FLEXIBLE CONSTRUCTION ANNUAL COST PER MILE	$158,294

MAINTENANCE COSTS:

ITEM		THICKNESS	MATERIAL	UNIT COST	
ROUTINE MAINTENANCE ACTIVITY				$0.00	LANE-MILE / YEAR
HMA OVERLAY PVMT SURF		(2.00")	Surface Mix	$10.87	/ SQ YD
HMA OVERLAY PVMT		(2.25")		$11.53	/ SQ YD
HMA SURFACE MIX		(1.50")	Surface Mix	$8.14	/ SQ YD
HMA BINDER MIX		(0.75")	ling Binder Mix	$3.39	/ SQ YD
HMA OVERLAY SHLD	(Year 30)	(2.25")	Shoulder Mix	$9.07	/ SQ YD
HMA OVERLAY SHLD		(2.00")	Shoulder Mix	$8.06	/ SQ YD
MILLING (2.00 IN)				$3.00	/ SQ YD
PARTIAL DEPTH PVMT PATCH		(Mill & Fill Surf)	Surface Mix	$80.82	/ SQ YD
PARTIAL DEPTH SHLD PATCH		(Mill & Fill Surf)	Shoulder Mix	$78.06	/ SQ YD
PARTIAL DEPTH PVMT PATCH		(Mill & Fill +2.00 ")	Leveling Binder Mix	$78.96	/ SQ YD
PARTIAL DEPTH SHLD PATCH		(Mill & Fill +2.00 ")	Shoulder Mix	$78.06	/ SQ YD
LONGITUDINAL SHOULDER JOINT ROUT & SEAL				$2.00	/ LIN FT
CENTERLINE JOINT ROUT & SEAL				$2.00	/ LIN FT
RANDOM / THERMAL CRACK ROUT & SEAL		(100% Rehab = 110.00' / Station / Lane)		$2.00	/ LIN FT

FLEXIBLE TOTAL LIFE-CYCLE COST	$3,473,632
FLEXIBLE TOTAL ANNUAL COST PER MILE	$206,354

FULL-DEPTH HMA PAVEMENT
HMA OVERLAY OF RUBBLIZED PCC PAVEMENT
Figure 54-7.C
STANDARD DESIGN

MAINTENANCE COSTS:	ITEM	%	QUANTITY	UNIT	UNIT COST		COST	PRESENT WORTH
YEAR 5								
	LONG SHLD JT R&S	100.00%	14,500	LIN FT	$2.00		$29,000	
	CNTR LINE JOINT R&S	100.00%	14,500	LIN FT	$2.00		$29,000	
	RNDM / THRM CRACK R&S	50.00%	11,963	LIN FT	$2.00		$23,926	
	PD PVMT PATCH M&F SURF	0.10%	29	SQ YD	$80.82		$2,344	
	PWFn =	0.8626		PW =	0.8626	X	$84,270	$72,692
YEAR 10								
	LONG SHLD JT R&S	100.00%	14,500	LIN FT	$2.00		$29,000	
	CNTR LINE JOINT R&S	100.00%	14,500	LIN FT	$2.00		$29,000	
	RNDM / THRM CRACK R&S	50.00%	11,963	LIN FT	$2.00		$23,926	
	PD PVMT PATCH M&F SURF	0.50%	145	SQ YD	$80.82		$11,719	
	PWFn =	0.7441		PW =	0.7441	X	$93,645	$69,681
YEAR 15								
	MILL PVMT & SHLD 2.00"	100.00%	33,129	SQ YD	$3.00		$99,387	
	PD PVMT PATCH M&F ADD'L 2.00"	1.00%	290	SQ YD	$78.96		$22,898	
	HMA OVERLAY PVMT 2.00"	100.00%	29,000	SQ YD	$10.87		$315,275	
	HMA OVERLAY SHLD 2.00 "	100.00%	4,129	SQ YD	$8.06		$33,300	
	PWFn =	0.6419		PW =	0.6419	X	$470,860	$302,227
YEAR 20								
	LONG SHLD JT R&S	100.00%	14,500	LIN FT	$2.00		$29,000	
	CNTR LINE JOINT R&S	100.00%	14,500	LIN FT	$2.00		$29,000	
	RNDM / THRM CRACK R&S	50.00%	11,963	LIN FT	$2.00		$23,926	
	PD PVMT PATCH M&F SURF	0.10%	29	SQ YD	$80.82		$2,344	
	PWFn =	0.5537		PW =	0.5537	X	$84,270	$46,658
YEAR 25								
	LONG SHLD JT R&S	100.00%	14,500	LIN FT	$2.00		$29,000	
	CNTR LINE JOINT R&S	100.00%	14,500	LIN FT	$2.00		$29,000	
	RNDM / THRM CRACK R&S	50.00%	11,963	LIN FT	$2.00		$23,926	
	PD PVMT PATCH M&F SURF	0.50%	145	SQ YD	$80.82		$11,719	
	PWFn =	0.4776		PW =	0.4776	X	$93,645	$44,725
	HMA_SD							
YEAR 30	NON-INTERSTATE							
	MILL PVMT & SHLD 2.00"	100.00%	33,129	SQ YD	$3.00		$99,387	
	PD PVMT PATCH M&F ADD'L 2.00"	2.00%	580	SQ YD	$78.96		$45,797	
	PD SHLD PATCH M&F ADD'L 2.00"	1.00%	41	SQ YD	$78.06		$3,201	
	HMA OVERLAY PVMT 2.25 "	100.00%	29,000	SQ YD	$11.53		$334,469	
	HMA OVERLAY SHLD 2.25 "	100.00%	4,129	SQ YD	$9.07		$37,463	
	PWFn =	0.4120		PW =	0.4120	X	$520,317	$214,364
YEAR 35								
	LONG SHLD JT R&S	100.00%	14,500	LIN FT	$2.00		$29,000	
	CNTR LINE JOINT R&S	100.00%	14,500	LIN FT	$2.00		$29,000	
	RNDM / THRM CRACK R&S	50.00%	11,963	LIN FT	$2.00		$23,926	
	PD PVMT PATCH M&F SURF	0.10%	29	SQ YD	$80.82		$2,344	
	PWFn =	0.3554		PW =	0.3554	X	$84,270	$29,948
YEAR 40								
	LONG SHLD JT R&S	100.00%	14,500	LIN FT	$2.00		$29,000	
	CNTR LINE JOINT R&S	100.00%	14,500	LIN FT	$2.00		$29,000	
	RNDM / THRM CRACK R&S	50.00%	11,963	LIN FT	$2.00		$23,926	
	PD PVMT PATCH M&F SURF	0.50%	145	SQ YD	$80.82		$11,719	
	PWFn =	0.3066		PW =	0.3066	X	$93,645	$28,708
								$809,003
	ROUTINE MAINTENANCE ACTIVITY		4.12	Lane Miles	0.00		$0	$0
					MAINTENANCE LIFE-CYCLE COST			$809,003
45	YEAR LIFE CYCLE	CRFn = 0.0407852			MAINTENANCE ANNUAL COST PER MILE			$48,059

PCC PAVEMENT

JPCP

ROUTE		Willow Road			
SECTION		15161-1			
COUNTY		Cook			
LOCATION		Willow Road at IL 21			
FACILITY TYPE		NON-INTERSTATE			
PROJECT LENGTH		3625	FT	= = >	0.69 Miles
# OF CENTERLINES		4	CL		
# OF LANES		6	LANES		
# OF EDGES		4	EP		
LANE WIDTH - AVERAGE		12	FT		
SHOULDER WIDTH	PCC Inside	0	FT		
	PCC Outside	10	FT		
	Total Width of Paved Shoulders	20	FT		
PAVEMENT THICKNESS (RIGID)	JPCP	10.25	IN	TIED SHLD	
SHOULDER THICKNESS		10.25	IN		
POLICY OVERLAY THICKNESS		2.50	IN		

RIGID PAVEMENT TRAFFIC FACTORS		MINIMUM	ACTUAL	USE
		4.13	14.14	14.14
Worksheet Construction Type is	Reconstruction		The Pavement Type is	JPCP

INITIAL COSTS

ITEM	THICKNESS	100% QUANTITY	UNIT		UNIT PRICE		COST
JPC PAVEMENT	(10.25")	29,000	SQ YD		$54.52	/ SQ YD	$1,581,080
PAVEMENT REINFORCEMENT		0	SQ YD		$22.00	/ SQ YD	$0
STABILIZED SUBBASE	(4.00")	31,417	SQ YD		$19.00	/ SQ YD	$596,923
PCC SHOULDERS		4,100	SQ YD	*	$40.00	/ SQ YD	$164,000
CURB & GUTTER		8,000	LIN FT	*	$30.00	/ LIN FT	$240,000
SUBBASE GRAN MATL TY C	(2.05")	878	TONS		$25.00	/ TON	$21,950
IMPROVED SUBGRADE:	Aggregate	37,861	SQ YD		$7.00	/ SQ YD	$265,027
Reserved For User Supplied Item		0	UNITS		$0.00	/ UNITS	$0
Reserved For User Supplied Item		0	UNITS		$0.00	/ UNITS	$0
PAVEMENT REMOVAL		29,000	SQ YD		$15.00	/ SQ YD	$435,000
SHOULDER REMOVAL		8,056	SQ YD		$0.00	/ SQ YD	$0

Note: * Denotes User Supplied Quantity

RIGID CONSTRUCTION INITIAL COST	$3,303,980
RIGID CONSTRUCTION ANNUAL COST PER MILE	$196,275

MAINTENANCE COSTS:

ITEM	THICKNESS	MATERIAL	UNIT COST	
ROUTINE MAINTENANCE ACTIVITY			$0.00	/ LANE-MILE / YEAR
HMA POLICY OVERLAY	(2.50")			
HMA POLICY OVERLAY PVMT	(2.50")		$12.67	/ SQ YD
HMA SURFACE MIX	(1.50")	Surface Mix	$8.14	/ SQ YD
HMA BINDER MIX	(1.00")	aling Binder Mix	$4.52	/ SQ YD
HMA POLICY OVERLAY SHLD	(2.50")	Shoulder Mix	$10.08	/ SQ YD
CLASS A PAVEMENT PATCHING			$195.00	/ SQ YD
CLASS B PAVEMENT PATCHING			$150.00	/ SQ YD
CLASS C SHOULDER PATCHING			$145.00	/ SQ YD
PARTIAL DEPTH PVMT PATCH (Mill & Fill HMA Surf)		Surface Mix	$78.12	/ SQ YD
PARTIAL DEPTH PVMT PATCH (Mill & Fill HMA 2.50")		Surface Mix	$83.53	/ SQ YD
LONGITUDINAL SHOULDER JOINT ROUT & SEAL			$2.00	/ LIN FT
CENTERLINE JOINT ROUT & SEAL			$2.00	/ LIN FT
REFLECTIVE TRANSVERSE CRACK ROUT & SEAL			$2.00	/ LIN FT
RANDOM CRACK ROUT & SEAL	(100% Rehab = 100.00' / Station / Lane)		$2.00	/ LIN FT

RIGID TOTAL LIFE-CYCLE COST	$3,779,196
RIGID TOTAL ANNUAL COST PER MILE	$224,506

JOINTED PLAIN CONCRETE PAVEMENT
UNBONDED JOINTED PLAIN CONCRETE OVERLAY
Figure 54-7.A

MAINTENANCE COSTS:	ITEM	%	QUANTITY	UNIT	UNIT COST		COST	PRESENT WORTH
YEAR 10								
	PAVEMENT PATCH CLASS B	0.10%	29	SQ YD	$150.00		$4,350	
	PWFn =	0.7441		PW =	0.7441	X	$4,350	$3,237
YEAR 15								
	PAVEMENT PATCH CLASS B	0.20%	58	SQ YD	$150.00		$8,700	
	PWFn =	0.6419		PW =	0.6419	X	$8,700	$5,584
YEAR 20								
	PAVEMENT PATCH CLASS B	2.00%	580	SQ YD	$150.00		$87,000	
	SHOULDER PATCH CLASS C	0.50%	21	SQ YD	$145.00		$3,045	
	LONGITUDINAL SHLD JT R&S	100.00%	14,500	LIN FT	$2.00		$29,000	
	CENTERLINE JT R&S	100.00%	14,500	LIN FT	$2.00		$29,000	
	PWFn =	0.5537		PW =	0.5537	X	$148,045	$81,969
YEAR 25								
	PAVEMENT PATCH CLASS B	3.00%	870	SQ YD	$150.00		$130,500	
	SHOULDER PATCH CLASS C	1.00%	41	SQ YD	$145.00		$5,945	
	PWFn =	0.4776		PW =	0.4776	X	$136,445	$65,167
YEAR 30	NON-INTERSTATE							
	PAVEMENT PATCH CLASS B	4.00%	1,160	SQ YD	$150.00		$174,000	
	SHOULDER PATCH CLASS C	1.50%	62	SQ YD	$145.00		$8,990	
	HMA POLICY OVERLAY 2.5" (PVMT)	100.00%	29,000	SQ YD	$12.67		$367,307	
	HMA POLICY OVERLAY 2.5" (SHLD)	100.00%	4,129	SQ YD	$10.08		$41,625	
	PWFn =	0.4120		PW =	0.4120	X	$591,922	$243,864
YEAR 35	NON-INTERSTATE							
	LONGITUDINAL SHLD JT R&S	100.00%	14,500	LIN FT	$2.00		$29,000	
	CENTERLINE JT R&S	100.00%	14,500	LIN FT	$2.00		$29,000	
	RANDOM CRACK R&S	50.00%	10,875	LIN FT	$2.00		$21,750	
	REFLECTIVE TRANSVERSE CRACK R&S	40.00%	6,970	LIN FT	$2.00		$13,940	
	PD PVMT PATCH M&F HMA 2.50"	0.10%	29	SQ YD	$83.53		$2,422	
	PWFn =	0.3554		PW =	0.3554	X	$96,112	$34,157
YEAR 40	NON-INTERSTATE							
	PAVEMENT PATCH CLASS B	0.50%	145	SQ YD	$150.00		$21,750	
	LONGITUDINAL SHLD JT R&S	100.00%	14,500	LIN FT	$2.00		$29,000	
	CENTERLINE JT R&S	100.00%	14,500	LIN FT	$2.00		$29,000	
	REFLECTIVE TRANSVERSE CRACK R&S	60.00%	10,454	LIN FT	$2.00		$20,908	
	RANDOM CRACK R&S	50.00%	10,875	LIN FT	$2.00		$21,750	
	PD PVMT PATCH M&F HMA 2.50"	0.50%	145	SQ YD	$83.53		$12,111	
	PWFn =	0.3066		PW =	0.3066	X	$134,519	$41,238
								$475,216
	ROUTINE MAINTENANCE ACTIVITY		4.12	Lane Miles	$0.00		$0	$0
					MAINTENANCE LIFE-CYCLE COST			$475,216
45	YEAR LIFE CYCLE	CRFn = 0.0407852			MAINTENANCE ANNUAL COST PER MILE			$28,231

LIFE-CYCLE COST ANALYSIS: NEW DESIGN

Calculated / Revised : 11/5/19 2:04 PM

			JPCP	HMA
CONSTRUCTION	INITIAL COST	PRESENT WORTH	$3,303,980	$2,664,629
		ANNUAL COST PER MILE	$196,275	$158,294
MAINTENANCE	LIFE-CYCLE COST	PRESENT WORTH	$475,216	$809,003
		ANNUAL COST PER MILE	$28,231	$48,059
TOTAL	LIFE-CYCLE COST	PRESENT WORTH	$3,779,196	$3,473,632
		ANNUAL COST PER MILE	$224,506	$206,354

LIFE-CYCLE COST ANALYSIS: FINAL SUMMARY

LOWEST COST OPTION	==========>	**HMA**	**$206,354**	
OTHER OPTIONS (LOWEST TO HIGHEST):	TYPE / PERCENTAGE	**JPCP**	**$224,506**	8.8%

S:\GEN\WPDOCS\Pavement Designs\D-1\Willow Road East Ramps - 60D77\Revised Submittal\[Willow Rd Mainline - Revised IDOT Mech Pvmt Dgn LCCA 09-05-13

PROJECT AND TRAFFIC INPUTS

(Enter Data in Gray Shaded Cells)

Route: Ramps B & D
Section: 1516I-1
County: Cook
Location: Willow Road at IL 21

Comments: East Ramps (B&D) Willow Road at Milwaukee Ave (Ramp D Controls)
Advance Contract for overall Willow Road reconstruction

Design Date: 08/26/2019 ONP <-- BY
Modify Date: <-- BY

	ADT	Year
Current:	6,900	2018
Future:	8,500	2040

Facility Type: Interstate or Freeway
** Ramp Design Fig. 54-1.B **
# of Lanes = 1 Lane Ramp
Crossroad? Unmarked State Route
# of Lanes = 6 or more
Rural or Urban? Urban
Road Class: I

Subgrade Support Rating (SSR): Poor
Construction Year: 2019
Design Period (DP) = 20 years

	Minimum ADT	Structural Design Traffic: Actual ADT	Actual %of Total ADT	% of ADT in Design Lane	
PV =	0	7,215	93.7%	P =	100%
SU =	250	254	3.3%	S =	100%
MU =	750	231	3.0%	M =	100%

Struct. Design ADT = 7,700 (2029)

TRAFFIC FACTOR CALCULATION

FLEXIBLE PAVEMENT		RAMP DESIGN MIN	
Cpv =	0.15	0.15	50%
Csu =	132.5	112.06	50%
Cmu =	482.53	385.44	50%
TF flexible (Actual) =	2.92	(Actual ADT)	3.17
TF flexible (Min) =	3.17	(Min ADT Fig. 54-2.C)	

RIGID PAVEMENT		RAMP DESIGN MIN	
Cpv =	0.15	0.15	50%
Csu =	143.81	135.78	50%
Cmu =	696.42	567.21	50%
TF rigid (Actual) =	3.97	(Actual ADT)	4.59
TF rigid (Min) =	4.59	(Min ADT Fig. 54-2.C)	

NEW CONSTRUCTION / RECONSTRUCTION PAVEMENT DESIGN CALCULATIONS

Full-Depth HMA Pavement

Goto Map

Use TF flexible =	3.17	
PG Grade Lower Binder Lifts =	PG 64-22	(Fig. 53-4.R)
HMA Mixture Temp. =	73.5	deg. F (Fig. 54-5.C)
Design HMA Mixture Modulus (E_{HMA}) =	740	ksi (Fig. 54-5.D)
Design HMA Strain (ε_{HMA}) =	86	(Fig. 54-5.E)
Full Depth HMA Design Thickness =	9.75	in. (Fig. 54-5.F)
Limiting Strain Criterion Thickness =	14.50	in. (Fig. 54-5.I)
Use Full-Depth HMA Thickness =	**9.75**	**inches**

JPC Pavement

Use TF rigid =	4.59	
Edge Support =	Tied	Shoulder or C.&G.
Rigid Pavt Thick. =	**9.00**	**in. (Fig. 54-4.E)**

CRC Pavement

Use TF rigid =	4.59	
IBR value =	3	
CRCP Thickness =	**8.00**	**in. (Fig. 54-4.M)**

TF MUST BE > 60 FOR CRCP

RECONSTRUCTION ONLY (SUPPLEMENTAL) PAVEMENT DESIGN CALCULATIONS

HMA Overlay of Rubblized PCC

Goto Map

Use TF flexible =	3.17	
HMA Overlay Design Thickness =	7.25	in. (Fig. 54-5.U)
Limiting Strain Criterion Thickness =		in. (Fig. 54-5.V)
Use HMA Overlay Thickness =	**999.00**	**inches**

Unbonded Concrete Overlay

Review 54-4.03 for limitations and special considerations.

JPCP Thickness = NA inches

CONTACT BMPR FOR ASSISTANCE

DESIGN TABLES FROM BDE MANUAL CHAPTER 54 - PAVEMENT DESIGN

Class I Roads	Class II Roads	Class III Roads	Class IV Roads
4 lanes or more Part of a future 4 lanes or more One-way Streets with ADT > 3500	2 lanes with ADT > 2000 One way Street with ADT <= 3500	2 Lanes (ADT 750 -2000)	2 Lanes (ADT < 750)

	Min. Str. Design Traffic (Fig 54-2.C)		
Facility Type	PV	SU*	MU*
Interstate or Freeway	0	500	1500
Other Marked State Route	0	250	750
Unmarked State Route	0	250	750

* Use marked route minimums for unmarked routes (Fig. 54-1.B)

Class Table for One-Way Streets	
ADT	Class
0 - 3500	II
>3501	I

	Traffic Factor ESAL Coefficients			
	Rigid (Fig. 54-4.C)		Flexible (Fig. 54-5.B)	
Class	Csu	Cmu	Csu	Cmu
I	143.81	696.42	132.50	482.53
II	135.78	567.21	112.06	385.44
III	129.58	562.47	109.14	384.35
IV	129.58	562.47	109.14	384.35

Class Table for 2 or 3 lanes (not future 4 lane & not one-way street)	
ADT	Class
0 - 749	IV
750 - 2000	III
>2000	II

	Design Lane Distribution Factors For Structural Design Traffic (Fig. 54-2.B)					
	Rural			Urban		
Number of Lanes	P	S	M	P	S	M
1 Lane Ramp	100%	100%	100%	100%	100%	100%
2 or 3	50%	50%	50%	50%	50%	50%
4	32%	45%	45%	32%	45%	45%
6 or more	20%	40%	40%	8%	37%	37%