Bench Mark: brass disk set in concrete along the north side of Anthony Drive. Sta. ±1223+71, 150' Lt., Elev. = 734.35.

Existing Structure: S.N. 010-0021 was originally built in 1956 as F.A. Route 39 Sec. 14-VB-VF and widened in 1992. The structure length is 725'-1" back-to-back of abutments. The out-to-out deck width is 121'-2". The superstructure consists of a reinforced concrete deck supported on four multi-girder spans, a 3 span continuous unit and a simple span unit. The original girders from 1956 are 102½" deep and consist of double angle flanges riveted to a web plate. The widening girders from 1992 are of welded plate construction with a web depth of 96". The deck and girders are non-composite. The superstructure is supported on two stub abutments and three multi-column piers all founded on concrete piles. The superstructure and Pier 3 will be replaced, while the other substructure elements will be reused.

Stage construction will be utilized to maintain two lanes of traffic in each direction at all times.

No salvage.

HIGHWAY CLASSIFICATION

F.A.I. Route 74 - I-74
Functional Class: Interstate
ADT: 63,100 (2017) / 75,700 (2037)
ADTT: 8,455 (2017) / 10,145 (2037)
DHV: 6,155
Design Speed: 70 MPH
Posted Speed: 60 MPH
Two-Way Traffic Directional Dist. 50:50

DESIGN SPECIFICATIONS (New Const.)

2017 AASHTO LRFD Bridge Design Specifications, 8th Edition

SEISMIC DATA (Exist. Const.)

Seismic Performance Category (SPC) = A
Horizontal Bedrock Acceleration Coefficient (A) = 0.047g
Site Coefficient (S) = 1.2

LOADING HL 93 (New Const.)

Allow 50#/sq. ft. for future wearing surface

DESIGN STRESSES

FIELD UNITS (New Const.)

f'c = 3,500 psi
f'c = 4,000 psi (superstructure)
fy = 60,000 psi (reinforcement)
fy = 50,000 psi (M270 Grade 50)

FIELD UNITS (Exist. Struct. 1956)

f'c = 2,500 psi
fy = 40,000 psi (reinforcement)

FIELD UNITS (Exist. Struct. 1992)

f'c = 3,500 psi
fy = 60,000 psi (reinforcement)

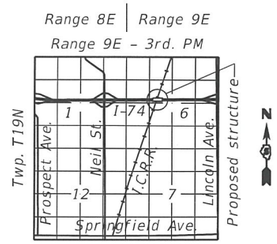

LOCATION SKETCH

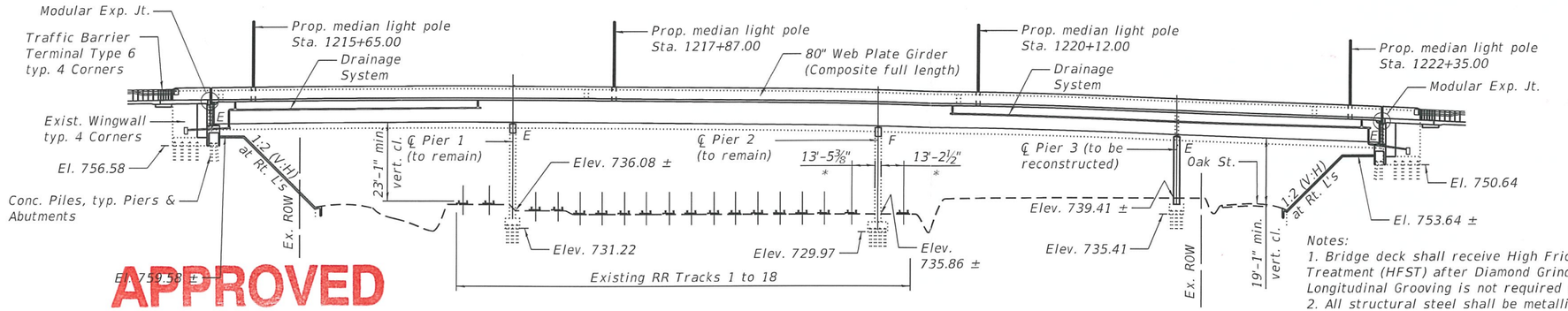

ELEVATION

* Dimensions at Rt. L's to Track

Note: No free fall deck drains will be permitted in the span over the tracks or within 10 ft. of cross arms of a railroad pole line.

Notes:
1. Bridge deck shall receive High Friction Surface Treatment (HFST) after Diamond Grinding. Longitudinal Grooving is not required with HFST.
2. All structural steel shall be metallized (or galvanized as permitted by special provisions).
3. Up to ¼" may be ground off the bridge deck and the bridge approach slabs.

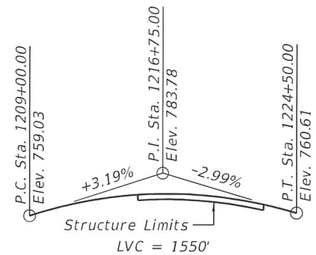

PROFILE GRADE - I-74

Along PGL WB & EB
(The profile grade shows the final elevations after grinding)

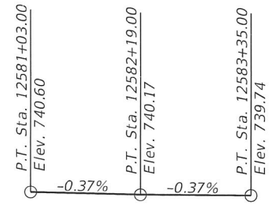

PROFILE GRADE - ICRR

Along ℄ Track 1

APPROVED
OCT 7 2019
AS A BASIS FOR
PREPARATION OF DETAILED PLANS

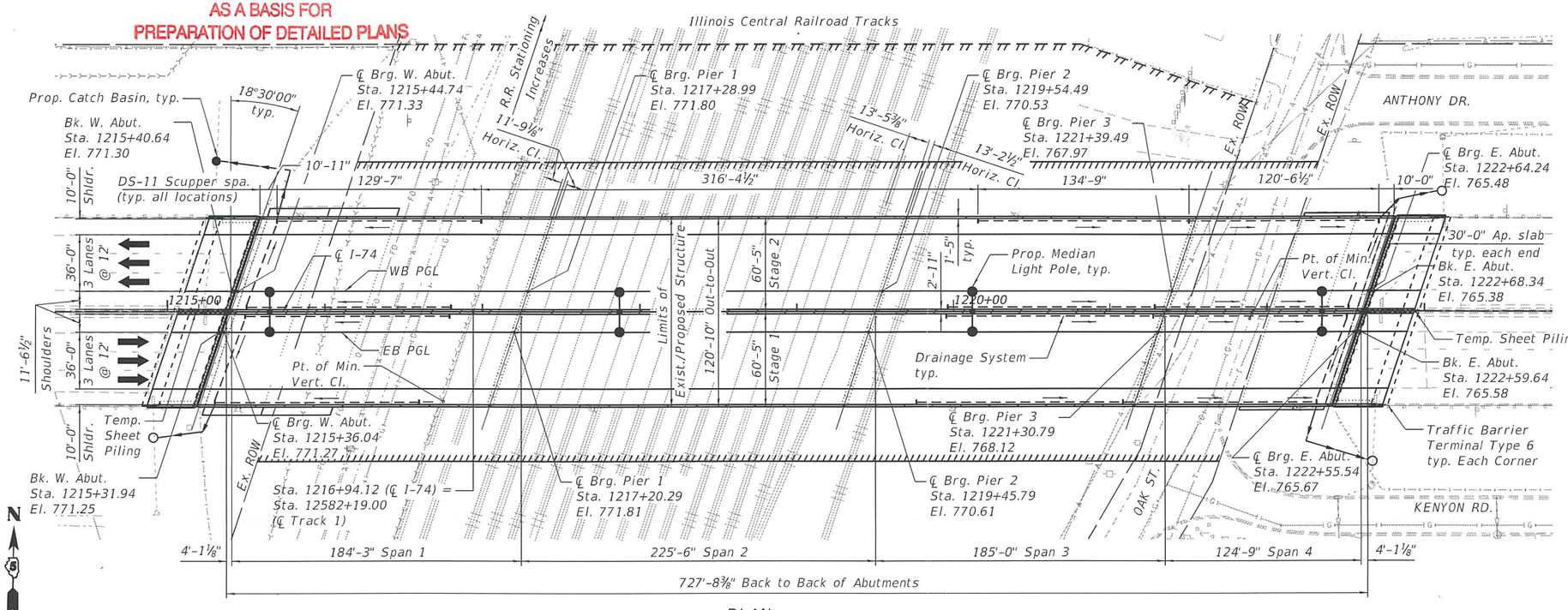

PLAN

LEGEND

- Ex. Underground Sanitary Sewer
- Ex. Underground Telephone Line
- Ex. Underground Water Main
- Ex. Underground Gas Line
- Ex. Aerial Line
- Ex. Underground Fiber Optic
- Ex. ROW Line
- Ex. Fence
- Prop. Temporary Easement
- Prop. Permanent Easement
- Prop. Catch Basin

GENERAL PLAN & ELEVATION
F.A.I. 74 OVER ICRR/OAK ST.
SECTION (14-1)BR, (14HB-2)BR-1
CHAMPAIGN COUNTY
STATION 1219+00.14
STRUCTURE NO. 010-0021

MODEL: $MODELNAME$
FILE NAME: $FILE1$
$DATE$ $TIME$

exp U.S. Services Inc.
Chicago, IL
BUILDINGS • EARTH & ENVIRONMENT • ENERGY
INDUSTRIAL • INFRASTRUCTURE • SUSTAINABILITY

USER NAME =		DESIGNED - H. PATEL	REVISED -
		CHECKED - B. RUSSELL	REVISED -
PLOT SCALE =		DRAWN - T. MORE	REVISED -
PLOT DATE =		CHECKED - B. KUNZ	REVISED -

STATE OF ILLINOIS
DEPARTMENT OF TRANSPORTATION

SHEET 1 OF 3 SHEETS

F.A.I. RTE.	SECTION	COUNTY	TOTAL SHEETS	SHEET NO.
74	(14-1)BR, (14HB-2)BR-1	CHAMPAIGN	3	1
		CONTRACT NO. 70C64		
	ILLINOIS	FED. AID PROJECT		

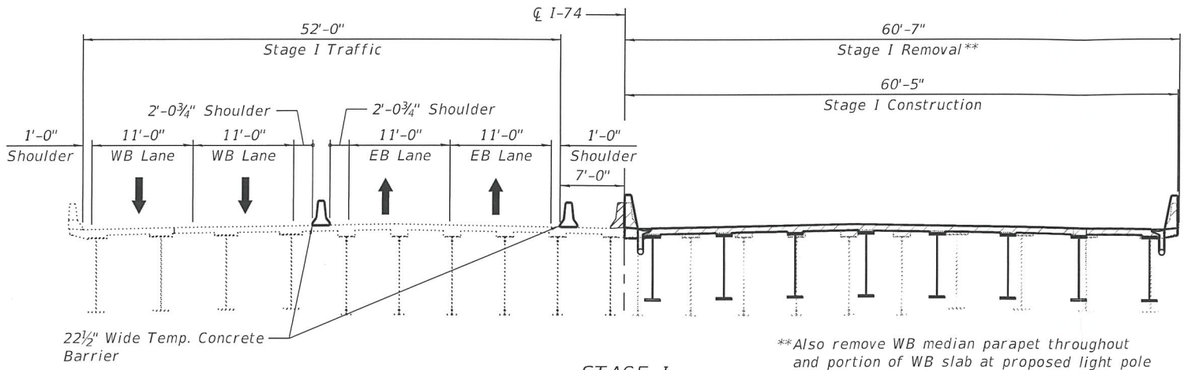

STAGE I

(Looking East)

**Also remove WB median parapet throughout and portion of WB slab at proposed light pole foundation in Stage I.

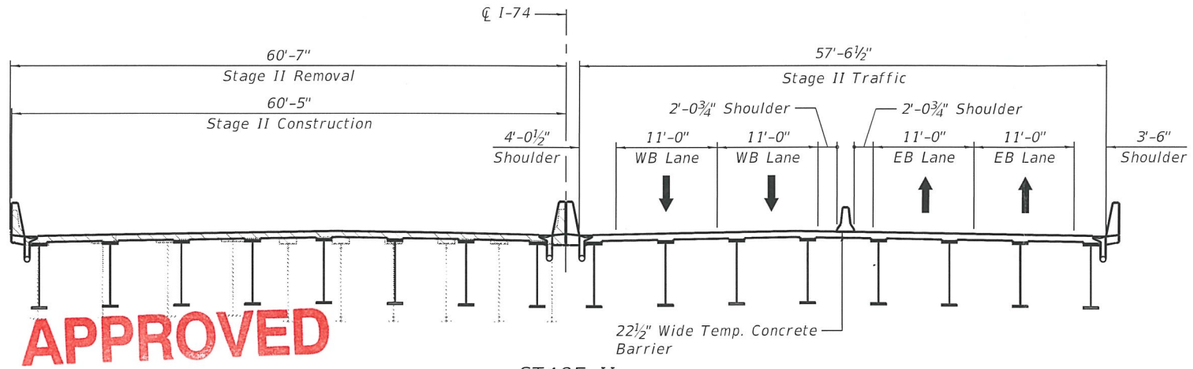

STAGE II

(Looking East)

APPROVED

OCT 7 2019

AS A BASIS FOR PREPARATION OF DETAILED PLANS

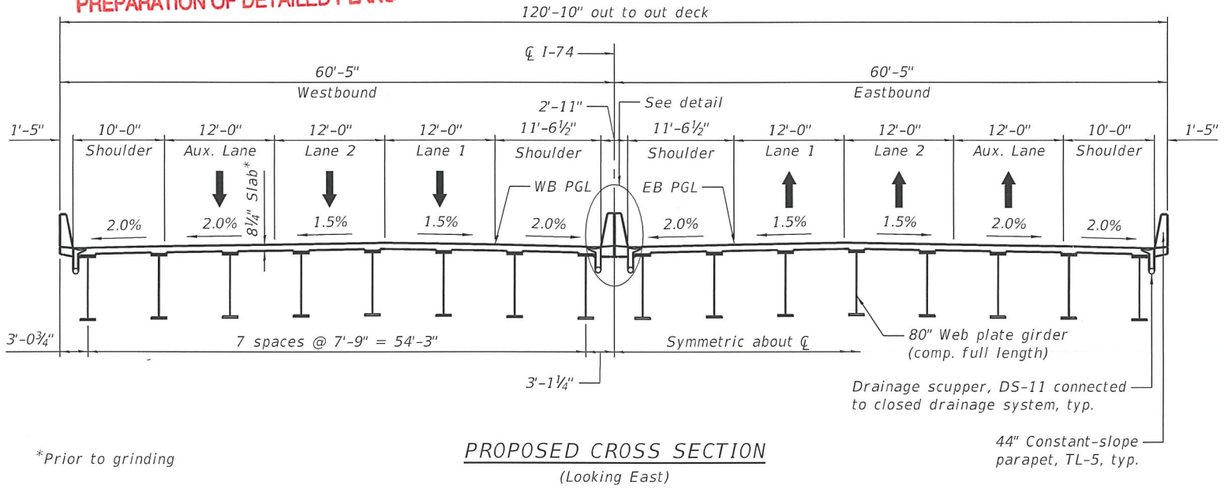

*Prior to grinding

PROPOSED CROSS SECTION

(Looking East)

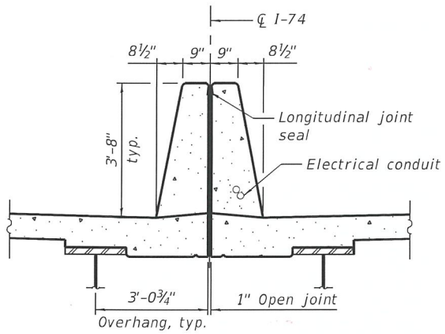

SECTION AT MEDIAN PARAPET

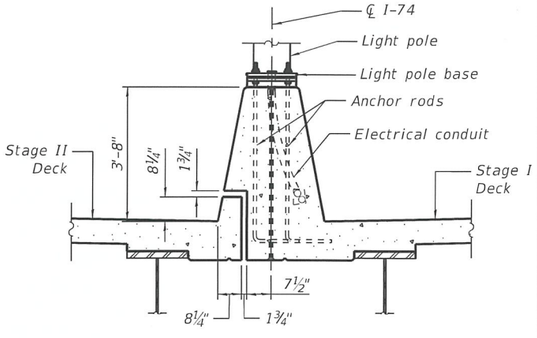

SECTION AT MEDIAN LIGHT POLE FOUNDATION

(Looking East)

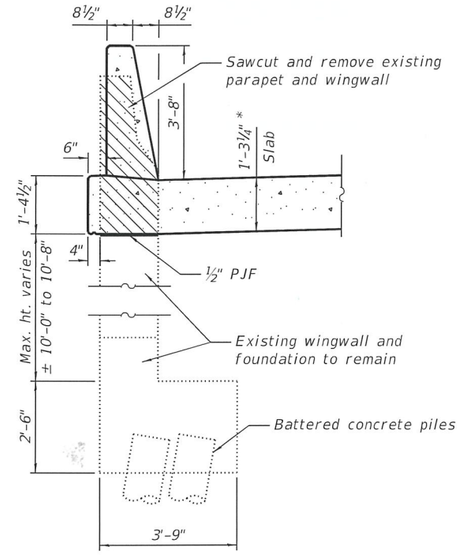

PARTIAL SECTION THROUGH APPROACH SLAB AT WINGWALL

(Looking East)

Partial section over north wingwall shown. South section similar.

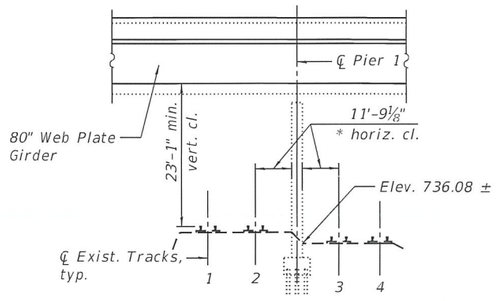

PIER 1 TRACK CLEARANCES

* Dimensions at Rt. L's to Track

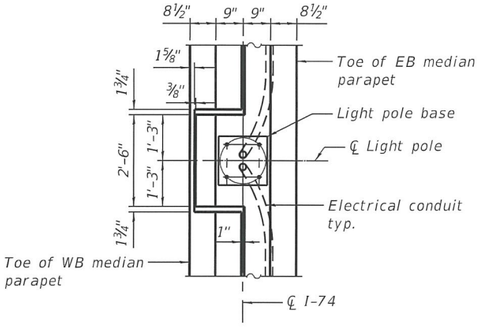

PLAN VIEW AT MEDIAN LIGHT POLE FOUNDATION

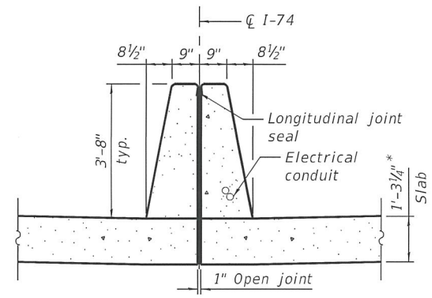

PARTIAL SECTION THROUGH APPROACH SLAB AT MEDIAN

DECK CROSS SECTIONS & DETAILS
F.A.I. 74 OVER ICRR/OAK ST.
SECTION (14-1)BR, (14HB-2)BR-1
CHAMPAIGN COUNTY
STATION 1219+00.14
STRUCTURE NO. 010-0021

exp U.S. Services Inc. Chicago, IL BUILDINGS•EARTH & ENVIRONMENT•ENERGY INDUSTRIAL•INFRASTRUCTURE•SUSTAINABILITY	USER NAME =	DESIGNED - H. PATEL	REVISED -
		CHECKED - B. RUSSELL	REVISED -
	PLOT SCALE =	DRAWN - T. MORE	REVISED -
	PLOT DATE =	CHECKED - B. KUNZ	REVISED -

STATE OF ILLINOIS
DEPARTMENT OF TRANSPORTATION

SHEET 2 OF 3 SHEETS

F.A.I. RTE.	SECTION	COUNTY	TOTAL SHEETS	SHEET NO.
74	(14-1)BR, (14HB-2)BR-1	CHAMPAIGN	3	2
		CONTRACT NO. 70C64		
		ILLINOIS	FED. AID PROJECT	

MODEL: Default
FILE NAME: pw:\\exp-pw.bentley.com:exp-pw-01\Documents\Projects\CHI\00246550-A0\800 CADD Design\802 Phase II\802.10 Structural\TS&I\Sheets\0100021-70C64-TSL-002.dgn

8/2/2019 8:22:54 AM

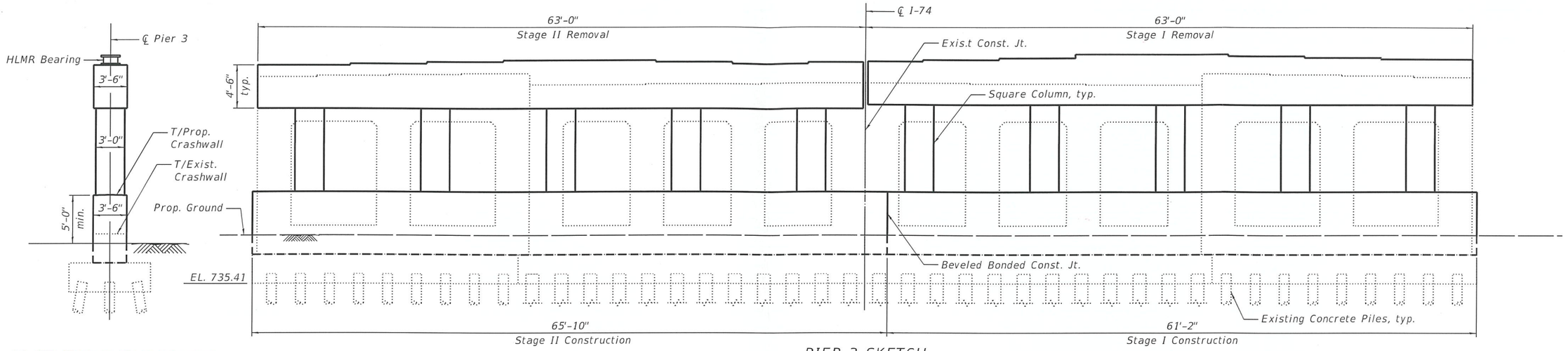

PIER 3 SKETCH

APPROVED

OCT 7 2019

AS A BASIS FOR PREPARATION OF DETAILED PLANS

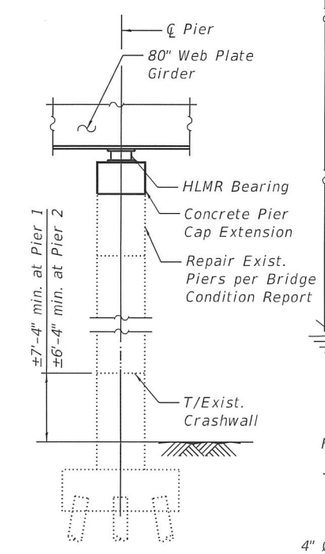

PIER 1 & 2 ELEVATION

(Pier 1 shown, Pier 2 similar)

Note: Horizontal dimensions are at right angles unless noted otherwise.

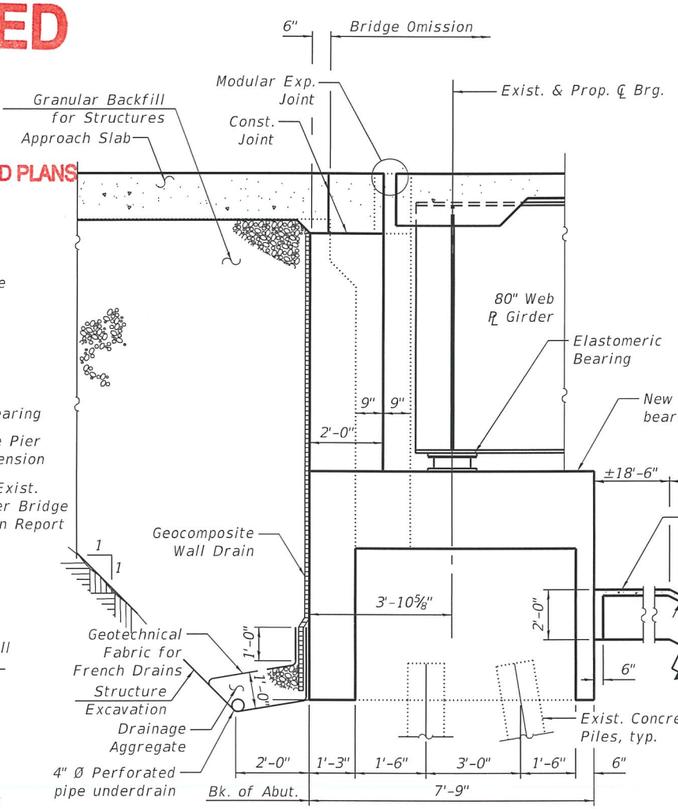

SECTION THRU WEST ABUTMENT

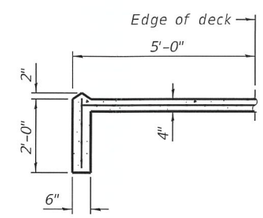

SECTION A-A

*1:4 (V:H) (at Rt. L's)
**1:2 (V:H) (at Rt. L's)

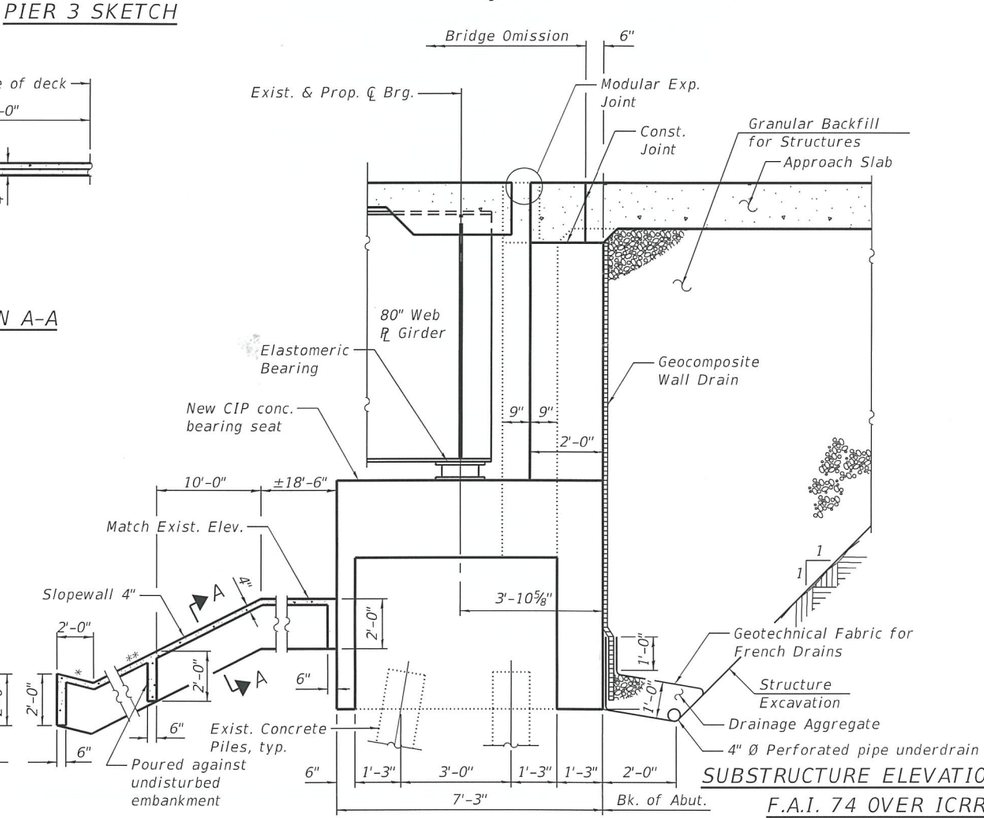

SECTION THRU EAST ABUTMENT

SUBSTRUCTURE ELEVATION & SECTIONS
F.A.I. 74 OVER ICRR/OAK ST.
SECTION (14-1)BR, (14HB-2)BR-1
CHAMPAIGN COUNTY
STATION 1219+00.14
STRUCTURE NO. 010-0021

exp U.S. Services Inc. Chicago, IL BUILDINGS • EARTH & ENVIRONMENT • ENERGY INDUSTRIAL • INFRASTRUCTURE • SUSTAINABILITY	USER NAME =	DESIGNED - H. PATEL	REVISED -	STATE OF ILLINOIS DEPARTMENT OF TRANSPORTATION	
		CHECKED - B. RUSSELL	REVISED -		
	PLOT SCALE =	DRAWN - H. PATEL	REVISED -		
	PLOT DATE =	CHECKED - B. KUNZ	REVISED -		SHEET 3 OF 3 SHEETS

F.A.I. RTE.	SECTION	COUNTY	TOTAL SHEETS	SHEET NO.
74	(14-1)BR, (14HB-2)BR-1	CHAMPAIGN	3	3
		CONTRACT NO. 70C64		
		ILLINOIS FED. AID PROJECT		

MODEL: SHT 3 of 3
FILE NAME: pw:\\exp-pw.bentley.com:exp-pw-01\Documents\Projects\CHI\00246550-A0\800 CADD Design\802 Phase II\802.10 Structural\TS&L\Sheets\0100021-70C64-TSL-003.dgn
8/2/2019 8:56:01 AM