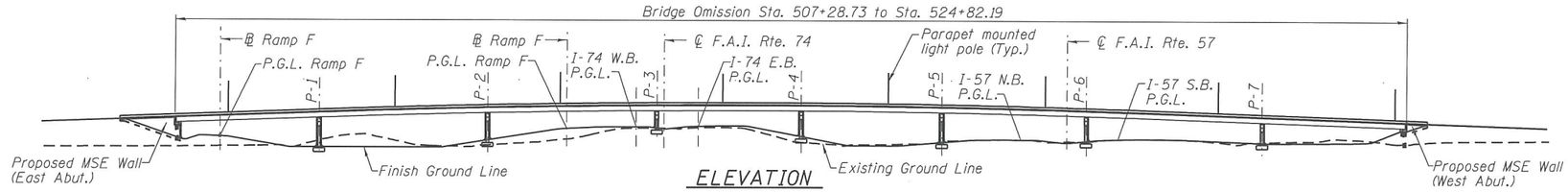

ELEVATION

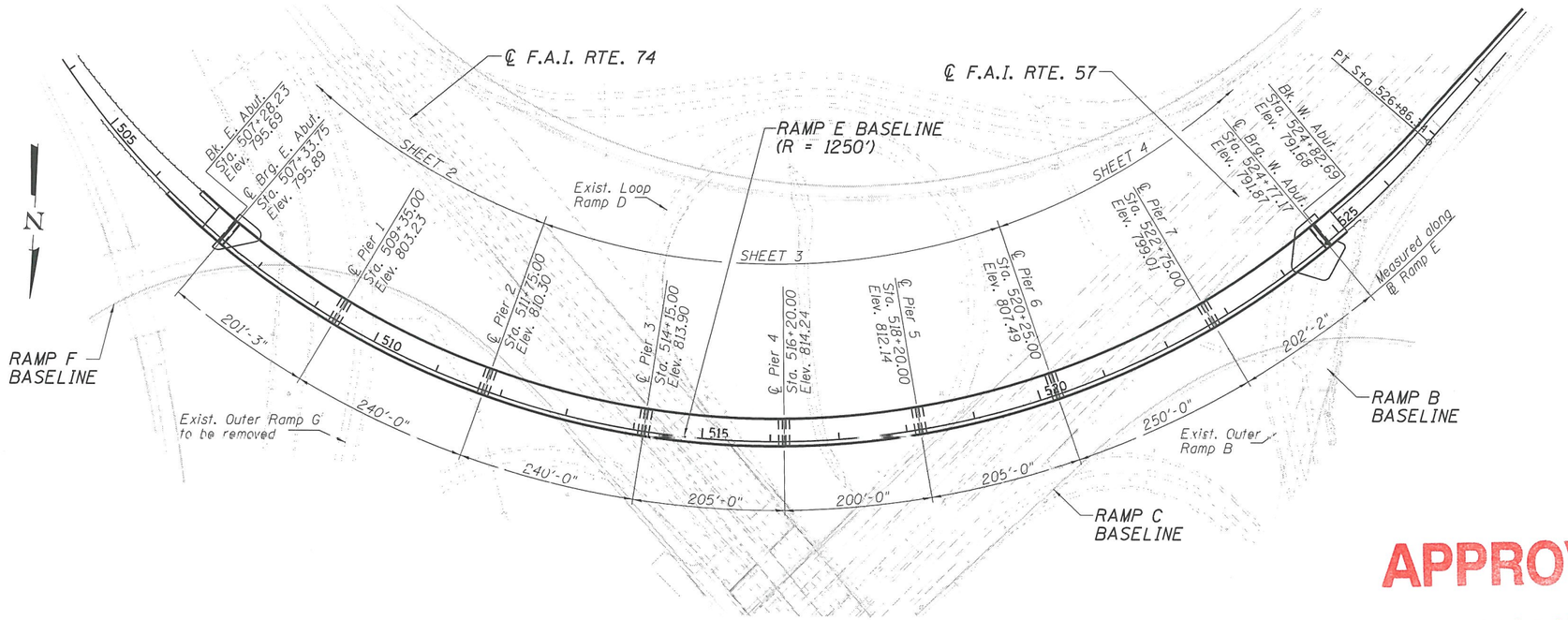

PLAN

Note:
Up to $\frac{1}{4}$" may be ground off the bridge deck and the bridge approach slabs.

PROPOSED RAMP F-3 CURVE DATA

PI Sta. = 630+93.16
Δ = 124° 20' 18" (Rt.)
D = 11° 56' 12"
R = 480.00'
T = 909.21'
L = 1,041.65'
E = 548.14'
e = 8.0%
P.C. Sta. = 621+83.95
P.T. Sta. = 632+25.60

PROPOSED RAMP F-4 CURVE DATA

PI Sta. = 633+25.97
Δ = 11° 56' 12" (Rt.)
D = 5° 58' 06"
R = 960.00'
T = 100.36'
L = 200.00'
E = 5.23'
e = 8.0%
S.E. RUN = 275'
P.C. Sta. = 632+25.60
P.T. Sta. = 634+25.60

PROPOSED RAMP E CURVE DATA

PI Sta. = 520+74.57
Δ = 110° 15' 02" (Lt.)
D = 4° 35' 01"
R = 1,250.00'
T = 1,793.52'
L = 2,405.30'
E = 936.14'
e = 7.6%
P.C. Sta. = 502+81.04
P.T. Sta. = 526+86.34

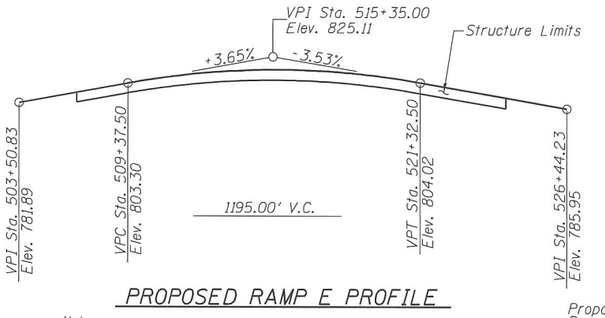

PROPOSED RAMP E PROFILE

Note:
The profile grade shows the final elevations after grinding.

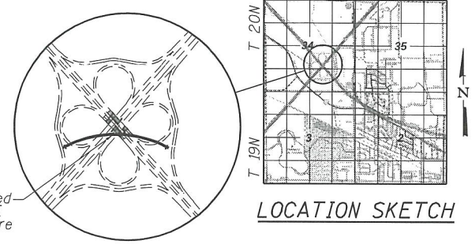

LOCATION SKETCH

HIGHWAY CLASSIFICATION

F.A.I. 57/74 - Ramp E
Functional Class: Interstate Ramp
ADT: 5,700 (2013); 9,900 (2040)
ADTT: 1,197 (2013); 2,079 (2040)
DHV: 920
Design Speed: 55 m.p.h.
Posted Speed: 55 m.p.h.
One-Way Traffic
Directional Distribution = 100%

F.A.I. Rte. 74 - I 74
Functional Class: Interstate
ADT: 38,900 (2013); 59,900 (2040)
ADTT: 9,336 (2013); 14,376 (2040)
DHV: 3,921 (2040)
Design Speed: 75 m.p.h.
Posted Speed: 70 m.p.h.
Two-Way Traffic
Directional Distribution: 50:50

F.A.I. Rte. 57 - I 57
Functional Class: Interstate
ADT: 32,400 (2013); 49,900 (2040)
ADTT: 7,776 (2013); 11,976 (2040)
DHV: 1,956 (2040)
Design Speed: 75 m.p.h.
Posted Speed: 70 m.p.h.
Two-Way Traffic
Directional Distribution: 50:50

F.A.I. 57/74 - Ramp F
Functional Class: Interstate Ramp
ADT: 3,300 (2013); 4,950 (2040)
ADTT: 901 (2013); 1,351 (2040)
DHV: 360
Design Speed: 40 m.p.h.
Posted Speed: 40 m.p.h.
One-Way Traffic
Directional Distribution: 100% NB

DESIGN SPECIFICATIONS

2017 AASHTO LRFD 8th Edition
Bridge Design Specifications

LOADING HL-93

Allow 50 psf for future wearing surface

DESIGN STRESSES

FIELD UNITS

f'c = 3,500 psi
f'c = 4,000 psi (Superstructure Concrete)
fy = 60,000 psi (Reinforcement) *
fy = 50,000 psi (M270 Grade 50W) **
fy = 70,000 psi (M270 Grade HPS 70W) **

*Stainless steel rebars for the deck to be considered in the final design.

**All structural steel shall be metalized or galvanized.

SEISMIC DATA

Seismic Performance Zone (SPZ) = 1
Design Spectral Acceleration at 1.0 sec (SD1) = 0.135g
Design Spectral Acceleration at 0.2 sec (SDS) = 0.233g
Soil Site Class = D

APPROVED
NOV 25 2019
AS A BASIS FOR PREPARATION OF DETAILED PLANS

GENERAL PLAN
RAMP E OVER RAMP F AND F.A.I. RTE. 74 AND F.A.I. RTE. 57
SECTION (10-34-1) HBK
CHAMPAIGN COUNTY
STATION 516+05.46
STRUCTURE NO. 010-1001

USER NAME = Gary Davis	DESIGNED L.M.	REVISED	
...\D570897-TSL-10_Ramp E over 174 and 157.dgn	CHECKED W.L.B.	REVISED	
PLOT SCALE =	DRAWN G.L.D.	REVISED	
PLOT DATE = NOV. 7, 2019	CHECKED L.M.	REVISED	

CMT

STATE OF ILLINOIS
DEPARTMENT OF TRANSPORTATION

SHEET NO. 1 OF 10 SHEETS

F.A.I. RTE.	SECTION	COUNTY	TOTAL SHEETS	SHEET NO.
74 & 57	(10-34-1) HBK	CHAMPAIGN		
		CONTRACT NO. 70B99		
	ILLINOIS	FED. AID PROJECT		

L:\IDOT\118682\Drawings\CADD_Sheets\Structural Sheets\TSLs\...

Bench Marks:
Chiseled "□" on top of N.W. corner of light pole foundation #50-107 on Exist. Ramp G, Sta. 1068+46.46
Elev. 769.173

Existing Structure: None

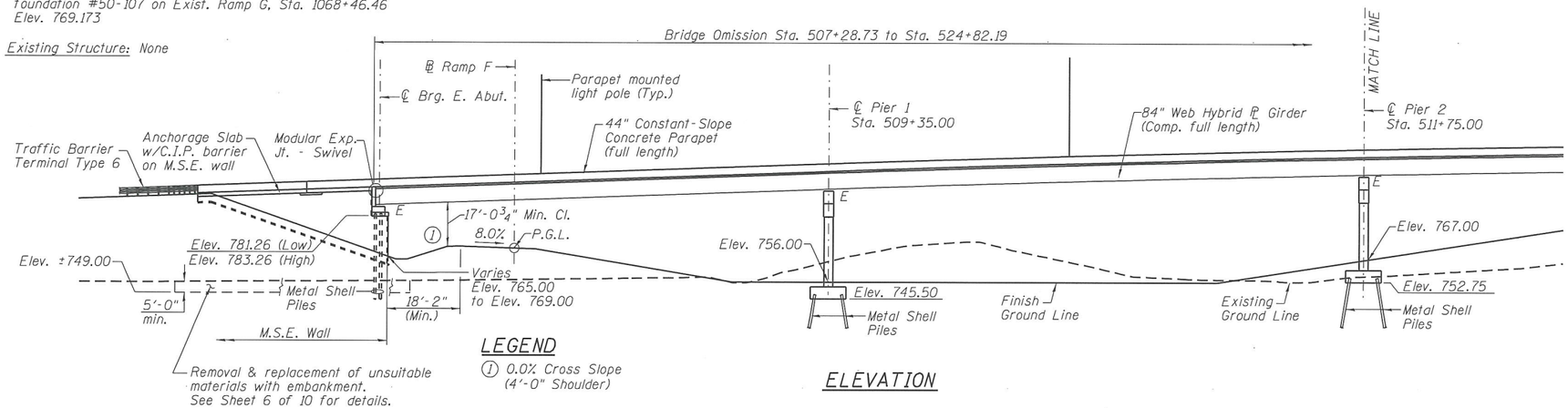

LEGEND
① 0.0% Cross Slope (4'-0" Shoulder)

ELEVATION

LIGHT POLE LOCATIONS

STATION	**OFFSET
508+05.26	34.17' Lt.
510+43.48	34.17' Lt.
512+77.12	34.17' Lt.
515+07.47	34.17' Lt.
517+43.29	34.17' Lt.
519+67.07	34.17' Lt.
522+15.36	34.17' Lt.
524+64.68	34.17' Lt.

**From ℄ Ramp E
10"ϕ Light pole has height of 45 ft. with an 8 ft. mast arm. Bolt circle diameter is 15 in.

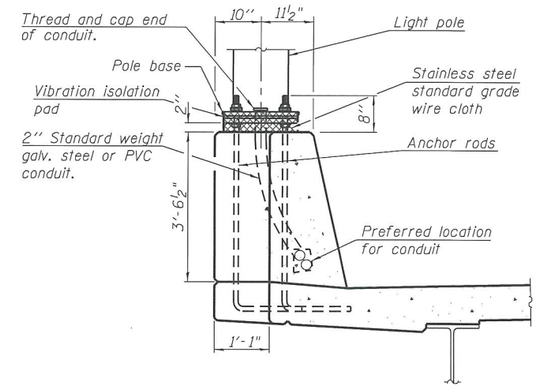

PARAPET MOUNTED LIGHT POLE

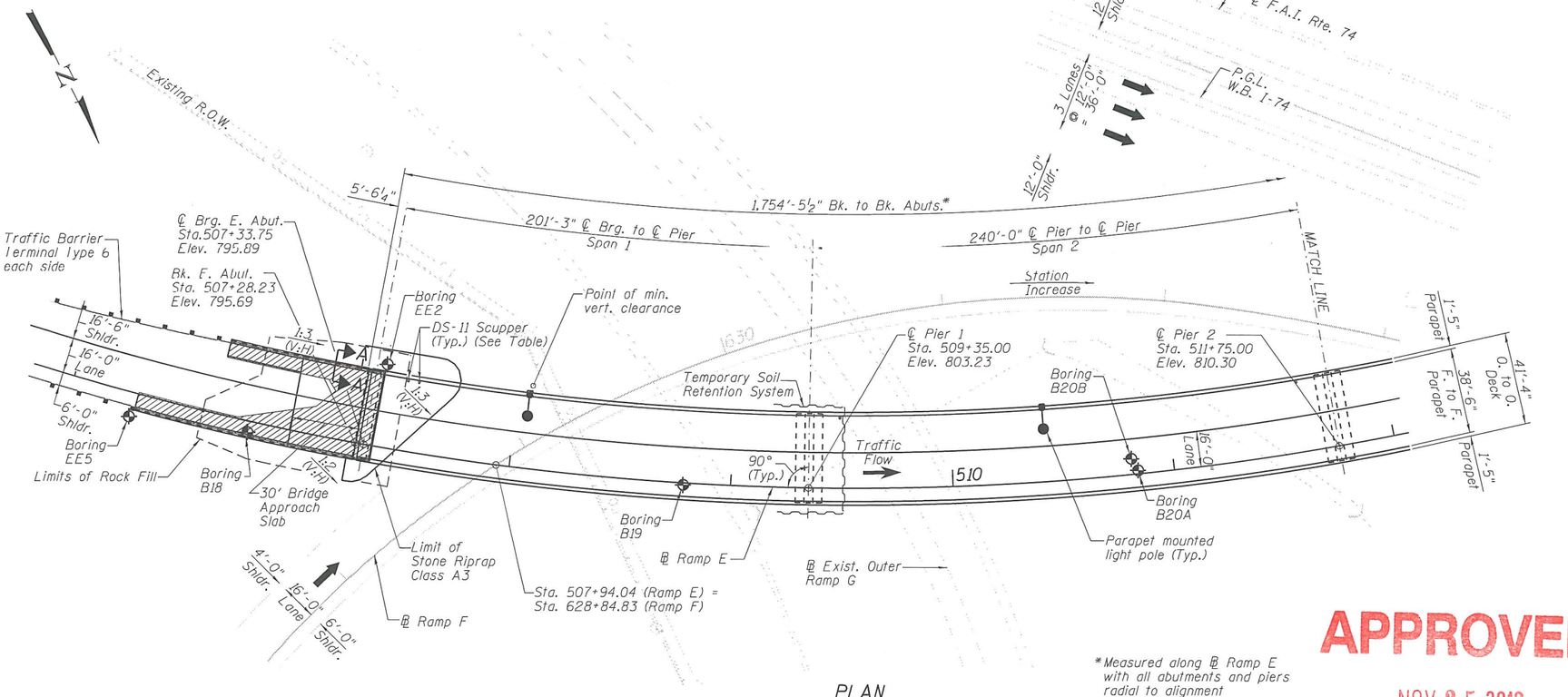

PLAN

*Measured along ℄ Ramp E with all abutments and piers radial to alignment

SOIL BORING LOCATIONS

Boring No.	Station	Offset	Northing	Easting
B18	506+81.72	5.08' Rt.	1266611.090	999025.606
B19	508+81.19	1.38' Rt.	1266722.099	998859.480
B20A	510+83.87	1.21' Lt.	1266807.235	998675.757
B20B	510+80.98	7.13' Lt.	1266800.678	998676.320
EE2	507+38.00	35' Lt.	1266613.854	998957.130
EE5	506+30.00	8' Rt.	1266579.498	999067.001

DS-11 SCUPPER LOCATIONS

STATION	OFFSET	STATION	OFFSET
507+49.00	32.5' Lt.	522+92.00	32.5' Lt.
507+54.00	32.5' Lt.	524+49.00	32.5' Lt.
509+49.00	32.5' Lt.	524+54.00	32.5' Lt.
511+60.00	32.5' Lt.		
515+99.00	32.5' Lt.		
517+99.00	32.5' Lt.		

APPROVED
NOV 25 2019
AS A BASIS FOR PREPARATION OF DETAILED PLANS

LEGEND
Approximate limits of Reinforced Soil Mass

NOTES:
1. See sheet 4 for Section A-A.
2. Existing Outer Ramp G shall be temporarily relocated not to impede East Abutment construction.
3. Profile grade elevations shown are prior to grinding.

L:\DOT\1186820\Drawings\FA00_Sheets\Structural Sheets\TSLs\...

CMT

USER NAME = Gary Davis	DESIGNED L.M.	REVISED
...\D570897-TSL-(1).Ramp E over 174 and 157.dgn	CHECKED W.L.B.	REVISED
PLOT SCALE =	DRAWN G.L.D.	REVISED
PLOT DATE = NOV. 7, 2019	CHECKED L.M.	REVISED

STATE OF ILLINOIS
DEPARTMENT OF TRANSPORTATION

I-57 & I-74 INTERCHANGE
STRUCTURE NO. 010-1001 - GENERAL PLAN I
SHEET NO. 2 OF 10 SHEETS

F.A.I. RTE.	SECTION	COUNTY	TOTAL SHEETS	SHEET NO.
74 & 57	(10-34-1) HBK	CHAMPAIGN		
		CONTRACT NO. 70B99		
	ILLINOIS FED. AID PROJECT			

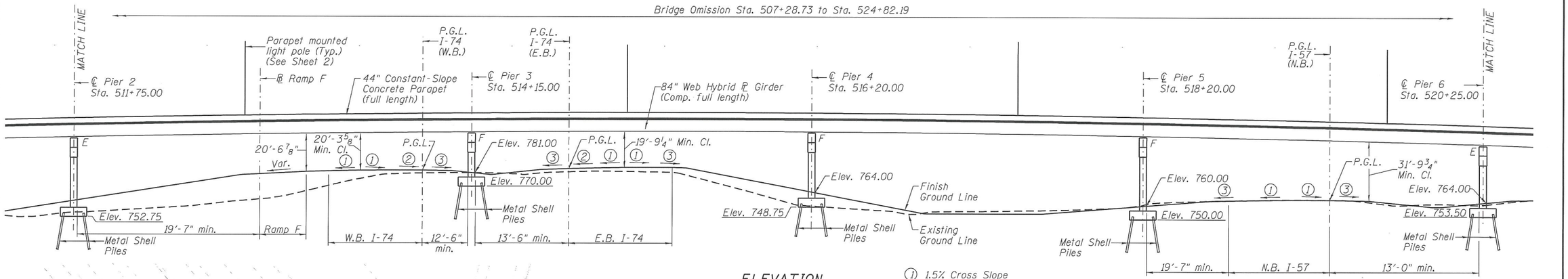

ELEVATION

① 1.5% Cross Slope
② 2.0% Cross slope
③ 4.0% Cross Slope

NOTES:
1. Horizontal clearance given from E.O.P. to Pier Cap.
2. See Plan View for location of Temporary Soil Retention System.

PROPOSED RAMP F PROFILE

APPROVED
NOV 25 2019
AS A BASIS FOR PREPARATION OF DETAILED PLANS

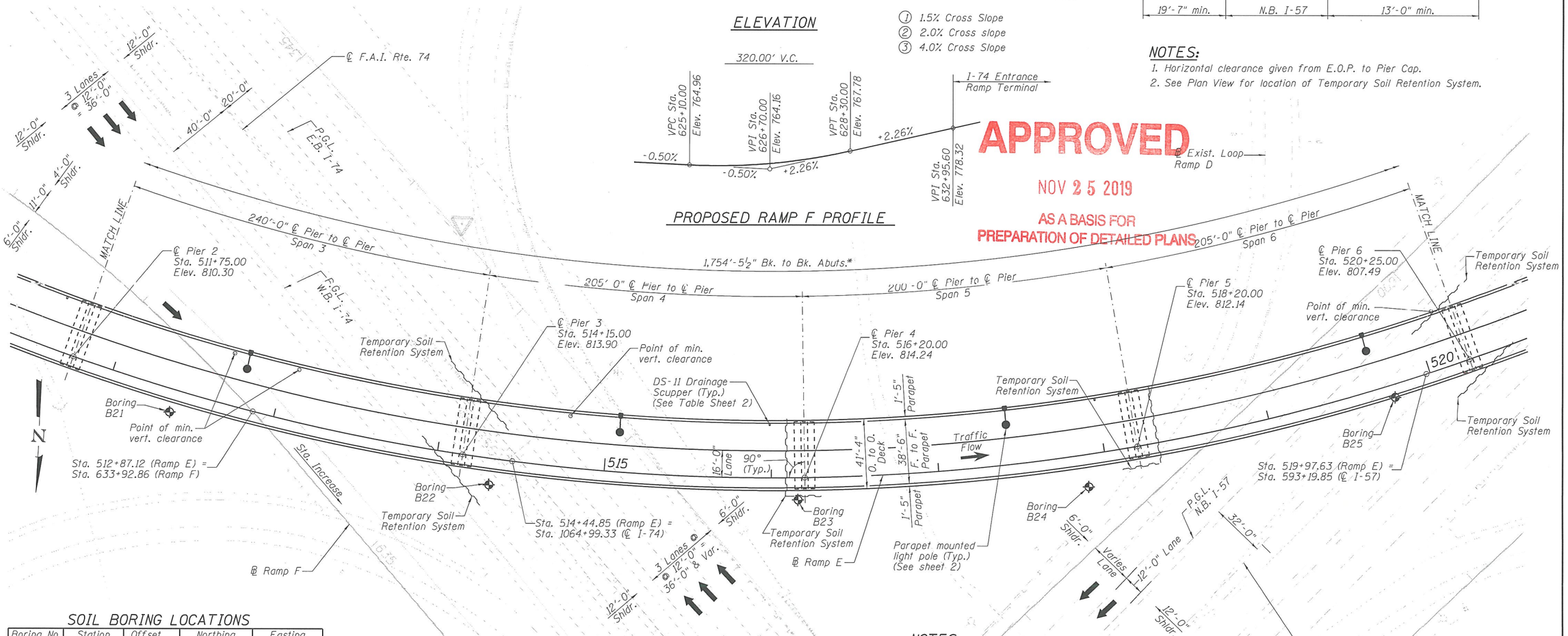

SOIL BORING LOCATIONS

Boring No.	Station	Offset	Northing	Easting
B21	512+39.59	13.53' Rt.	1266867.987	998530.909
B22	514+32.86	15.86' Rt.	1266902.120	998338.552
B23	516+15.94	13.31' Rt.	1266902.016	998153.483
B24	517+87.57	19.18' Rt.	1266885.527	997980.444
B25	519+75.77	7.88' Rt.	1266823.499	997800.440

*Measured along ℄ Ramp E with all abutments and piers radial to alignment

PLAN

NOTES:
1. Existing Loop Ramp D shall be in service during Ramp E construction.
2. ℄ Pier elevations shown are prior to grinding.

L:\IDOT\108682\Draw\CADD_Sheets\Structural Sheets\TSLs\...

CMT

USER NAME = Gary Davis	DESIGNED L.M.	REVISED
...\D570897-TSL-(2)_Ramp E over I74 and I57.dgn	CHECKED W.L.B.	REVISED
PLOT SCALE =	DRAWN G.L.D.	REVISED
PLOT DATE = NOV. 7, 2019	CHECKED L.M.	REVISED

STATE OF ILLINOIS
DEPARTMENT OF TRANSPORTATION

I-57 & I-74 INTERCHANGE
STRUCTURE NO. 010-1001 – GENERAL PLAN II
SHEET NO. 3 OF 10 SHEETS

F.A.I. RTE.	SECTION	COUNTY	TOTAL SHEETS	SHEET NO.
74 & 57	(10-34-1) HBK	CHAMPAIGN		
		CONTRACT NO. 70B99		
	ILLINOIS FED. AID PROJECT			

LEGEND
① 1.5% Cross Slope
② 4.0% Cross Slope

ELEVATION

NOTES:
1. Horizontal clearance given from E.O.P. to Pier Cap.
2. See Plan View for location of Temporary Soil Retention System.

SECTION A-A

APPROVED

NOV 25 2019

AS A BASIS FOR PREPARATION OF DETAILED PLANS

PROPOSED F.A.I. RTE. 74 PROFILE

PROPOSED F.A.I. RTE. 57 PROFILE

PLAN

*Measured along ℄ Ramp E with all abutments and piers radial to alignment

LEGEND
▨ Approximate limits of Reinforced Soil Mass

NOTES:
1. Existing Outer Ramp B shall be temporarily relocated to not impede West Abutment construction.
2. ℄ Ramp E elevations shown are prior to grinding.

SOIL BORING LOCATIONS

Boring No.	Station	Offset	Northing	Easting
B25	519+75.77	7.88' Rt.	1266823.499	997800.440
B26	522+02.29	20.96' Rt.	1266738.141	997587.740
B27	524+80.74	3.09' Rt.	1266556.248	997373.411
EW1	525+05.00	8' Rt.	1266545.672	997350.772
EW8	528+05.55	22' Lt.	1266293.859	997182.409
E-101	525+00.00	33.5' Lt.	1266516.613	997384.810
E-102	526+00.00	31.2' Lt.	1266447.849	997315.812
E-103	527+00.00	28.6' Lt.	1266373.624	997251.925

L:\IDOT\1106602\Draw\CADD_Sheets\Structural Sheets\TSLs\..

CMT

USER NAME = Gary Davis	DESIGNED L.M.	REVISED	
...\D570897-TSL-(3)_Ramp E over I74 and I57.dgn	CHECKED W.L.B.	REVISED	
PLOT SCALE =	DRAWN G.L.D.	REVISED	
PLOT DATE = NOV. 7, 2019	CHECKED L.M.	REVISED	

STATE OF ILLINOIS
DEPARTMENT OF TRANSPORTATION

I-57 & I-74 INTERCHANGE
STRUCTURE NO. 010-1001 – GENERAL PLAN III

SHEET NO. 4 OF 10 SHEETS

F.A.I. RTE.	SECTION	COUNTY	TOTAL SHEETS	SHEET NO.
74 & 57	(10-34-1) HBK	CHAMPAIGN		
		CONTRACT NO. 70B99		
	ILLINOIS FED. AID PROJECT			

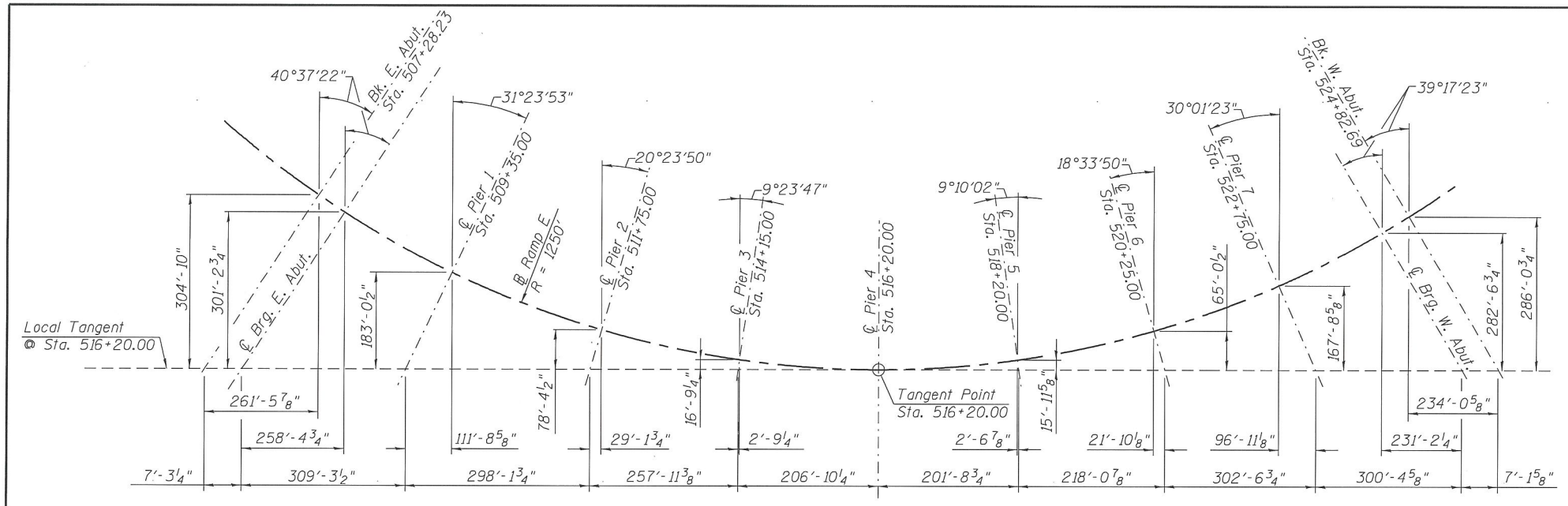

OFFSET SKETCH

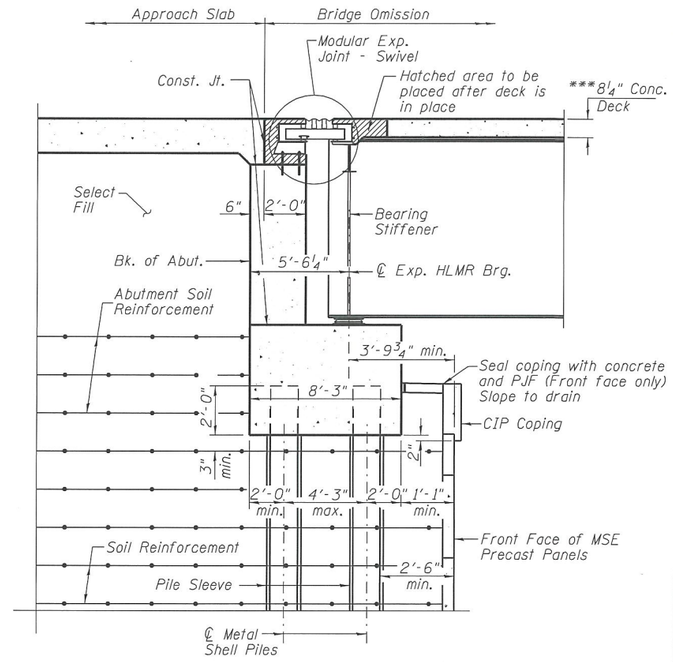

SECTION THRU ABUTMENT

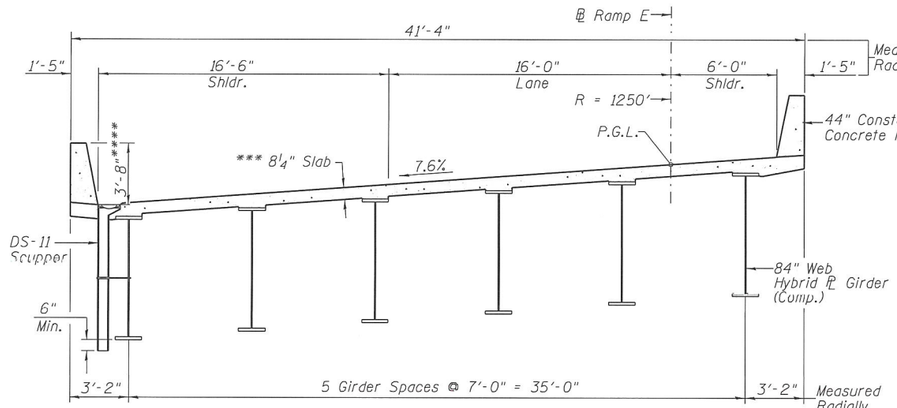

CROSS SECTION

(Looking Upstation)

***Prior to Grinding
****After Grinding

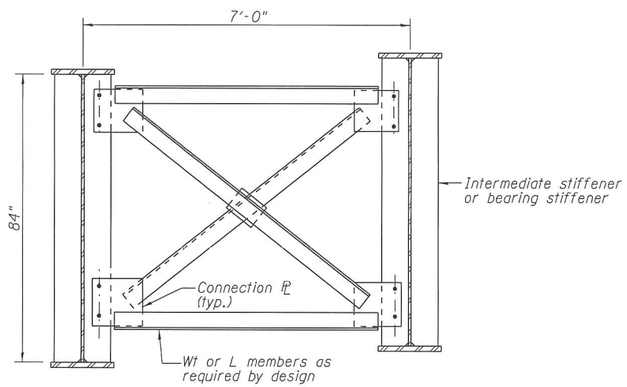

INTERIOR CROSS FRAME

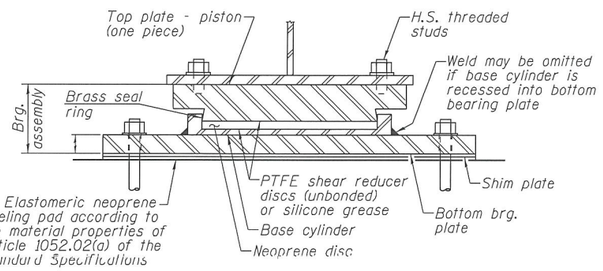

FIXED HLMR BEARING

Pier 3 - 5

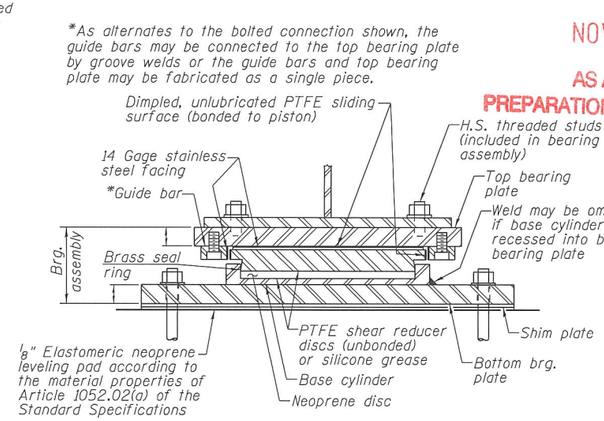

GUIDED EXPANSION HLMR BEARING

E. Abut., Pier 1, 2, 6 & 7, and W. Abut.

APPROVED
NOV 25 2019
AS A BASIS FOR PREPARATION OF DETAILED PLANS

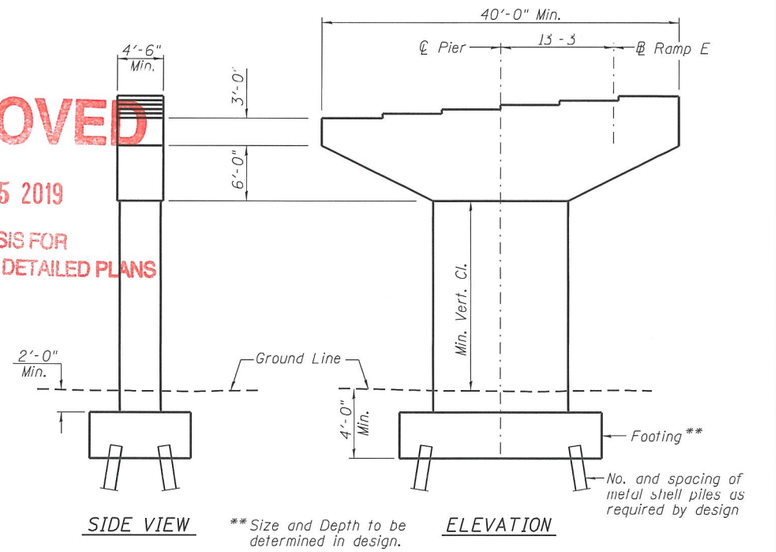

SIDE VIEW

** Size and Depth to be determined in design.

ELEVATION

PIER 1 THRU PIER 7 SKETCH

(Looking Upstation)

L:\IDOT\186682\D-ow\CADD_Sheets\Structural Sheets\TSLs\...

CMT	USER NAME = Gary Davis	DESIGNED L.M.	REVISED
	...\D570897-TSL-(4)_Ramp E over 174 and 157.dgn	CHECKED W.L.B.	REVISED
	PLOT SCALE =	DRAWN G.L.D.	REVISED
	PLOT DATE = NOV. 7, 2019	CHECKED L.M.	REVISED

STATE OF ILLINOIS
DEPARTMENT OF TRANSPORTATION

I-57 & I-74 INTERCHANGE
STRUCTURE NO. 010-1001 - GENERAL DETAILS
SHEET NO. 5 OF 10 SHEETS

F.A.I. RTE.	SECTION	COUNTY	TOTAL SHEETS	SHEET NO.
74&57	(10-34-1) HBK	CHAMPAIGN		
		CONTRACT NO. 70B99		
	ILLINOIS	FED. AID PROJECT		

Bench Marks:
Chiseled "□" on top of N.W. corner of light pole foundation #50-107 on Ramp DB, Sta. 1068+46.46
Elev. 769.173

Existing Structure: None

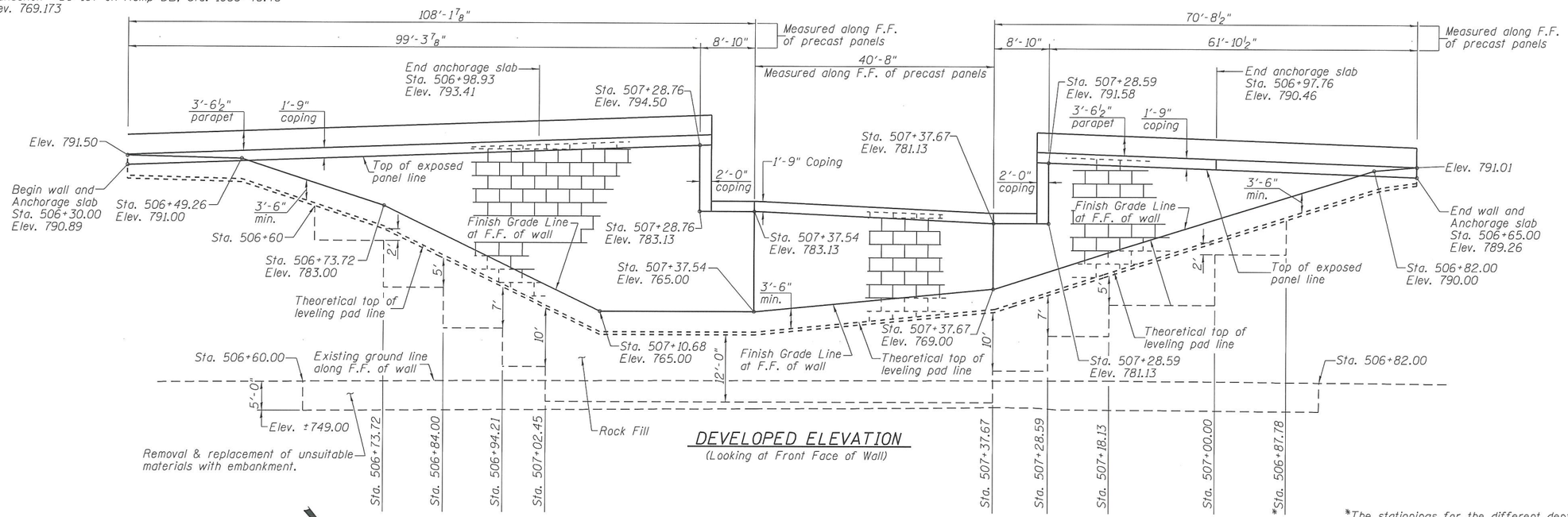

DEVELOPED ELEVATION
(Looking at Front Face of Wall)

*The stationings for the different depths of Rock Fill corresponding to different MSE wall height intervals are subject to change during construction based on how the bottom of the MSE wall will be stepped in the field.

MSE Wall Height Interval (ft.)	Thickness of Rock Fill below Mse Reinforced Mass (ft.)
10-15	2
15-20	5
20-25	7
25-30	10
30-35	12

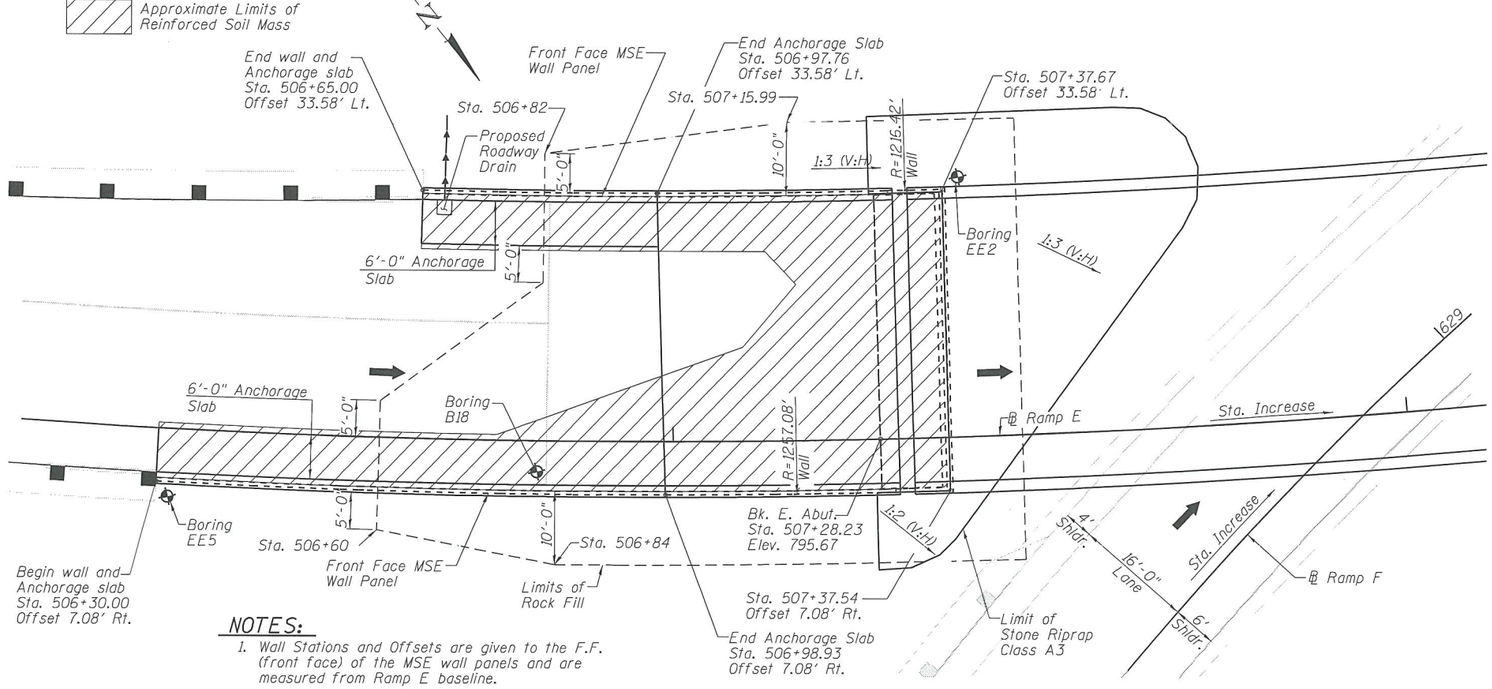

NOTES:
1. Wall Stations and Offsets are given to the F.F. (front face) of the MSE wall panels and are measured from Ramp E baseline.

PLAN

APPROVED
NOV 25 2019
AS A BASIS FOR PREPARATION OF DETAILED PLANS

CMT	USER NAME = Gary Davis	DESIGNED L.M.	REVISED	STATE OF ILLINOIS DEPARTMENT OF TRANSPORTATION	I-57 & I-74 INTERCHANGE STRUCTURE NO. 010-1001 - EAST ABUTMENT MSE WALL	F.A.I. RTE. 74 & 57	SECTION (10-34-1) HBK	COUNTY CHAMPAIGN	TOTAL SHEETS	SHEET NO.
	...\D570897-TSL-(5)_Ramp E over 174 and 157.dgn	CHECKED W.L.B.	REVISED					CONTRACT NO. 70B99		
	PLOT SCALE =	DRAWN G.L.D.	REVISED							
	PLOT DATE = NOV. 7, 2019	CHECKED L.M.	REVISED		SHEET NO. 6 OF 10 SHEETS		ILLINOIS FED. AID PROJECT			

L:\IDOT\1106602\Draw\CADD_Sheets\Structural Sheets\TSLs\...

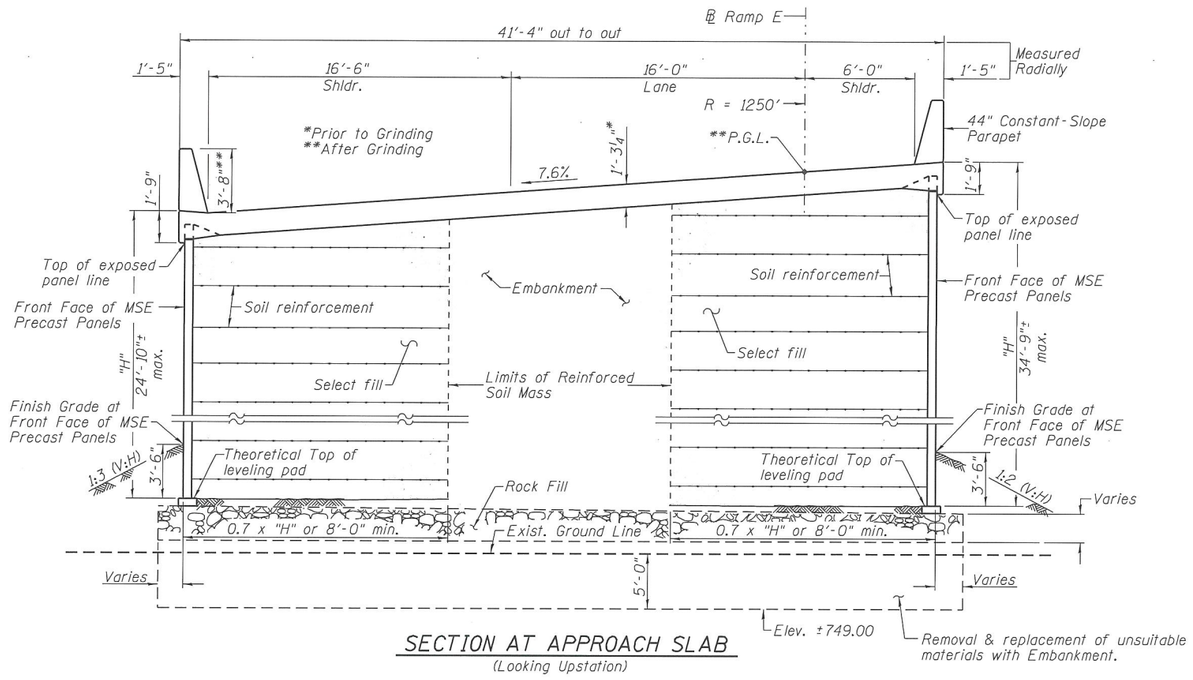

SECTION AT APPROACH SLAB

(Looking Upstation)

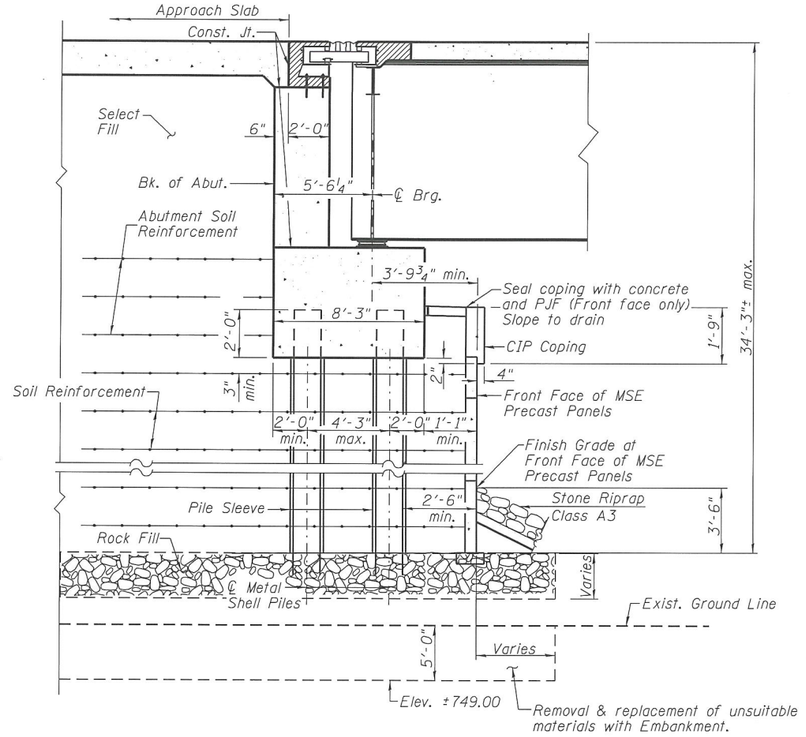

SECTION THRU ABUTMENT

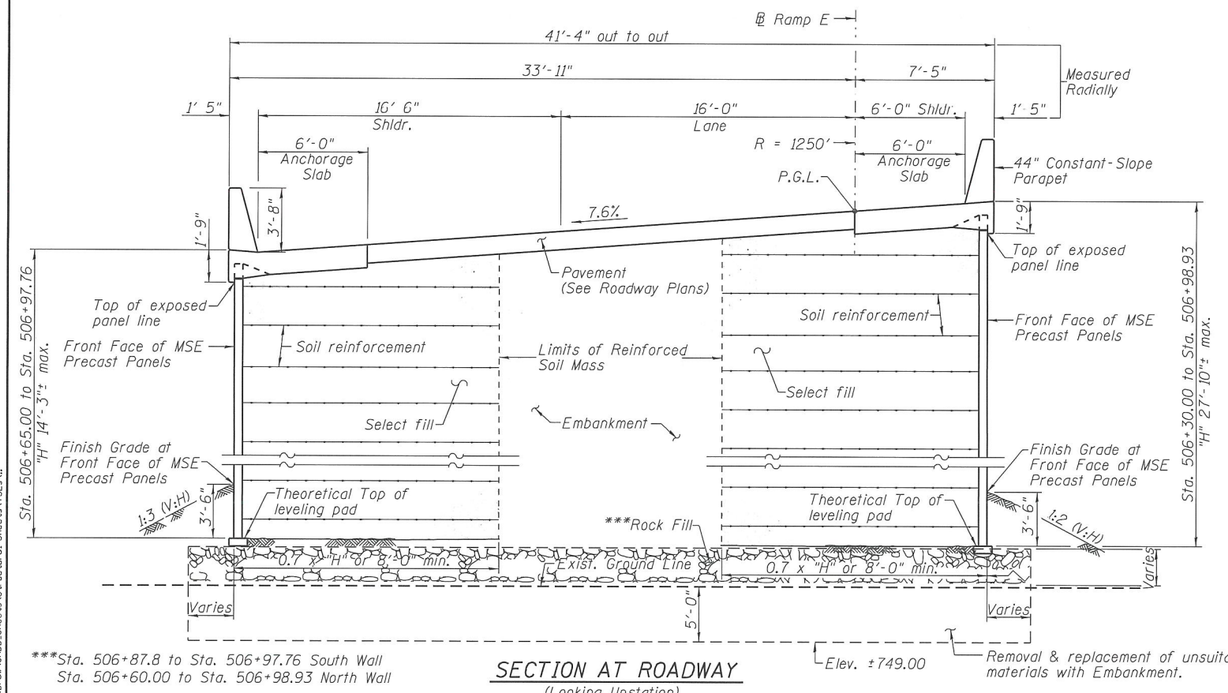

***Sta. 506+87.8 to Sta. 506+97.76 South Wall
Sta. 506+60.00 to Sta. 506+98.93 North Wall

SECTION AT ROADWAY

(Looking Upstation)

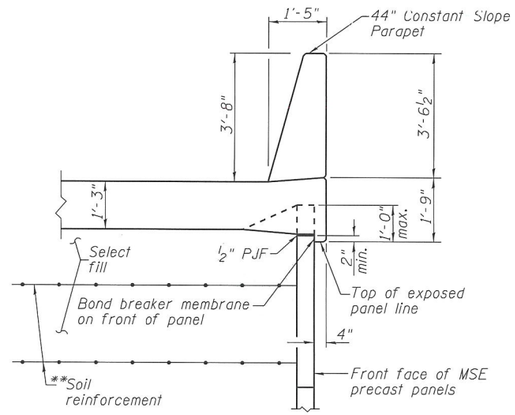

**The M.S.E. wall supplier's internal stability design shall account for the anchorage slab's bearing pressure surcharge of 1.0 ksf and horizontal sliding force of 0.5 kips/ft. of wall.

SECTION THRU CIP BARRIER AND ANCHORAGE SLAB ON PRECAST PANELS

APPROVED

NOV 25 2019

AS A BASIS FOR PREPARATION OF DETAILED PLANS

L:\IDOT\1186682\Draw\CAGD_Sheets\Structural Sheets\TSLs\...

CMT	USER NAME = Gary Davis	DESIGNED L.M.	REVISED
	...\D570897-TSL-(6)_Ramp E over 174 and 157.dgn	CHECKED W.L.B.	REVISED
	PLOT SCALE =	DRAWN G.L.D.	REVISED
	PLOT DATE = NOV. 7, 2019	CHECKED L.M.	REVISED

STATE OF ILLINOIS
DEPARTMENT OF TRANSPORTATION

I-57 & I-74 INTERCHANGE
STRUCTURE NO. 010-1001 – EAST ABUTMENT MSE WALL
SHEET NO. 7 OF 10 SHEETS

F.A.I. RTE.	SECTION	COUNTY	TOTAL SHEETS	SHEET NO.
74 & 57	(10-34-1) HBK	CHAMPAIGN		
		CONTRACT NO. 70B99		
	ILLINOIS FED. AID PROJECT			

Bench Marks:
Chiseled "□" on top of N.W. corner of light pole foundation #50-107 on Ramp DB, Sta. 1068+46.46
Elev. 769.173

Existing Structure: None

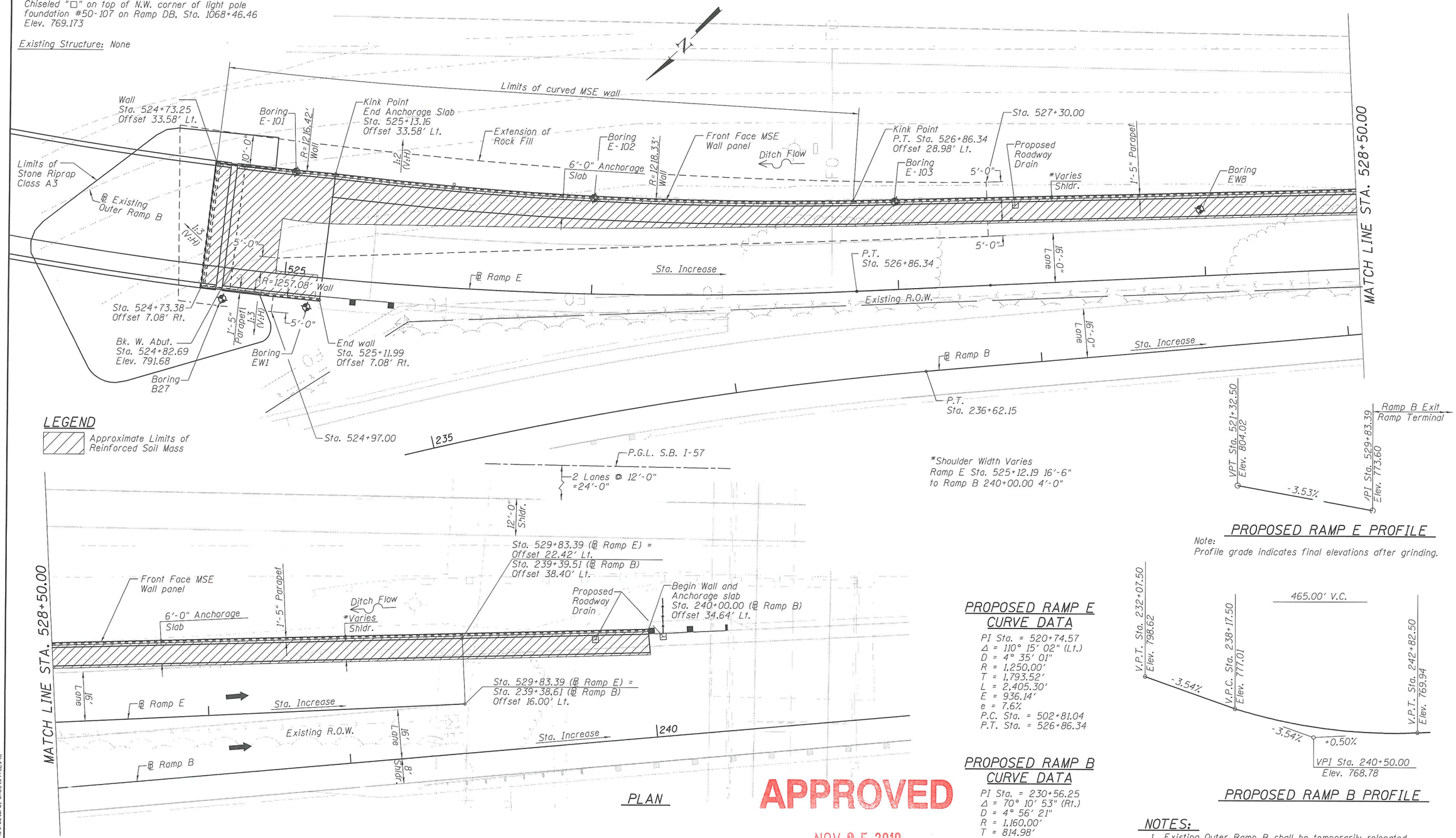

LEGEND

Approximate Limits of Reinforced Soil Mass

*Shoulder Width Varies
Ramp E Sta. 525+12.19 16'-6"
to Ramp B 240+00.00 4'-0"

PLAN

PROPOSED RAMP E PROFILE

Note:
Profile grade indicates final elevations after grinding.

PROPOSED RAMP B PROFILE

PROPOSED RAMP E CURVE DATA

PI Sta. = 520+74.57
Δ = 110° 15' 02" (Lt.)
D = 4° 35' 01"
R = 1,250.00'
T = 1,793.52'
L = 2,405.30'
E = 936.14'
e = 7.6%
P.C. Sta. = 502+81.04
P.T. Sta. = 526+86.34

PROPOSED RAMP B CURVE DATA

PI Sta. = 230+56.25
Δ = 70° 10' 53" (Rt.)
D = 4° 56' 21"
R = 1,160.00'
T = 814.98'
L = 1,420.88'
E = 257.67'
e = 7.8%
P.C. Sta. = 222+41.27
P.T. Sta. = 236+62.15

APPROVED
NOV 25 2019
AS A BASIS FOR
PREPARATION OF DETAILED PLANS

NOTES:

1. Existing Outer Ramp B shall be temporarily relocated during MSE Wall construction.
2. Wall Stations and Offsets are given to the F.F. (Front Face) of the MSE wall panels and are measured from Ramp E baseline, unless noted otherwise.

L:\IDOT\1106682\Draw\CADD_Sheets\Structural Sheets\TSLs\...

CMT	USER NAME = Gary Davis	DESIGNED L.M.	REVISED
	...\D570897-TSL-(7)_Ramp E over 174 and 157.dgn	CHECKED W.L.B.	REVISED
	PLOT SCALE =	DRAWN G.L.D.	REVISED
	PLOT DATE = NOV. 7, 2019	CHECKED L.M.	REVISED

STATE OF ILLINOIS
DEPARTMENT OF TRANSPORTATION

I-57 & I-74 INTERCHANGE
STRUCTURE NO. 010-1001 – WEST ABUTMENT MSE WALL
SHEET NO. 8 OF 10 SHEETS

F.A.I. RTE.	SECTION	COUNTY	TOTAL SHEETS	SHEET NO.
74 & 57	(10-34-1) HBK	CHAMPAIGN		
		CONTRACT NO. 70B99		
		ILLINOIS FED. AID PROJECT		

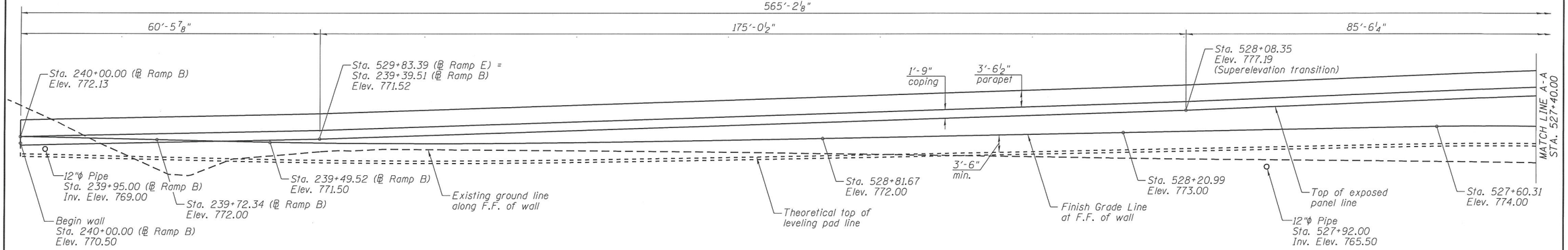

DEVELOPED ELEVATION

(Looking at Front Face of Wall)

*The stationings for the different depths of Rock Fill corresponding to different MSE wall height intervals are subject to change during construction based on how the bottom of the MSE wall will be stepped in the field.

MSE Wall Height Interval (ft.)	Thickness of Rock Fill below Mse Reinforced Mass (ft.)
10-15	2
15-20	5
20-25	7
25-30	10
30-35	12

APPROVED

NOV 25 2019

AS A BASIS FOR
PREPARATION OF DETAILED PLANS

L:\IDOT\106882\Draw\CADD_Sheets\Structural Sheets\TSL's\...

CMT

USER NAME = Gary Davis	DESIGNED L.M.	REVISED
...\D570897-TSL-(B)_Ramp E over 174 and 157	CHECKED W.L.B.	REVISED
PLOT SCALE =	DRAWN G.L.D.	REVISED
PLOT DATE = NOV. 7, 2019	CHECKED L.M.	REVISED

STATE OF ILLINOIS
DEPARTMENT OF TRANSPORTATION

I-57 & I-74 INTERCHANGE
STRUCTURE NO. 010-1001 - WEST ABUTMENT MSE WALL
SHEET NO. 9 OF 10 SHEETS

F.A.I. RTE.	SECTION	COUNTY	TOTAL SHEETS	SHEET NO.
74 & 57	(10-34-1) HBK	CHAMPAIGN		
		CONTRACT NO. 70B99		
	ILLINOIS FED. AID PROJECT			

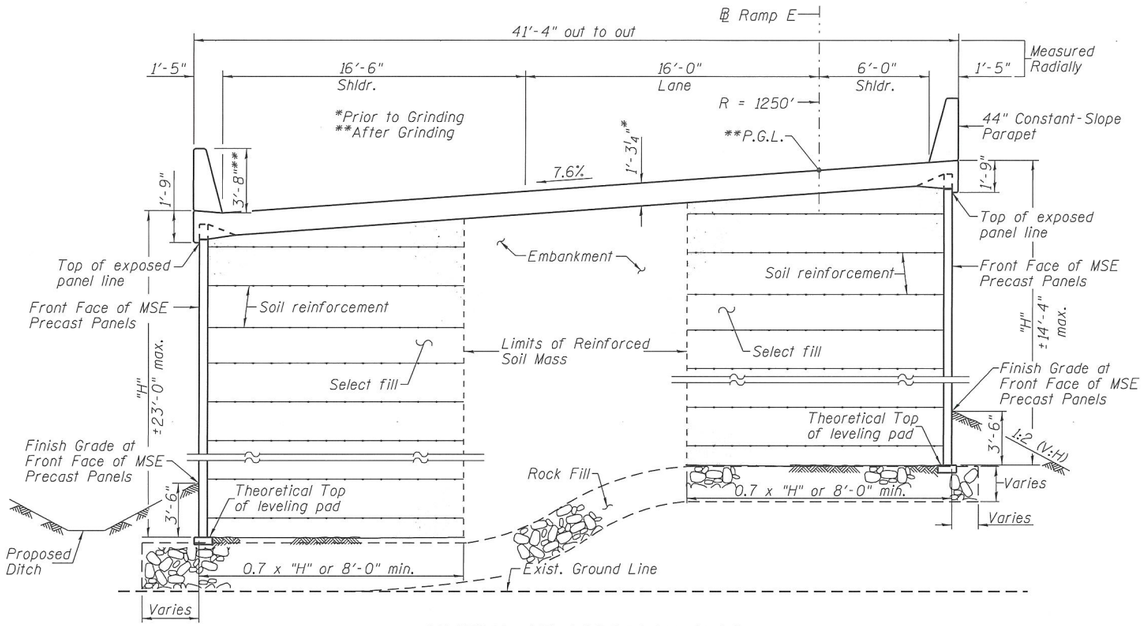

SECTION AT APPROACH SLAB

(Looking Upstation)

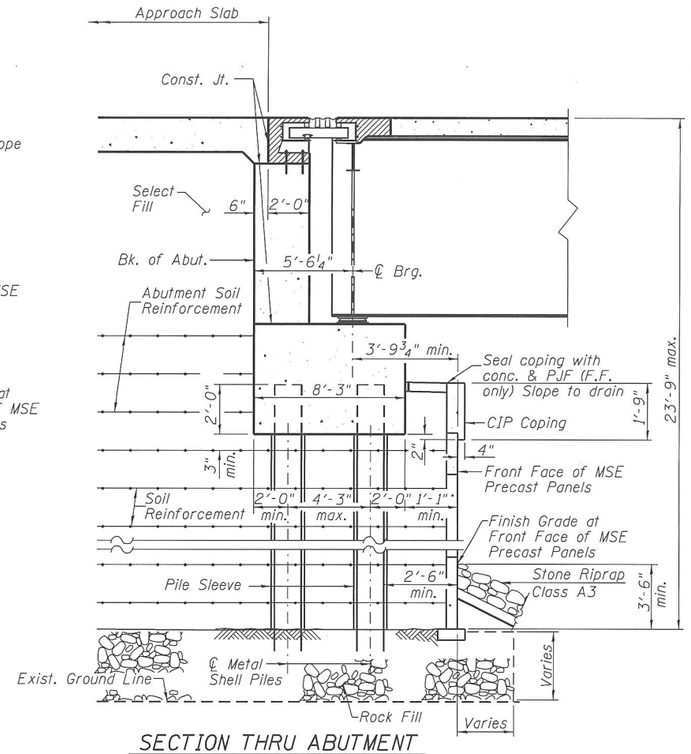

SECTION THRU ABUTMENT

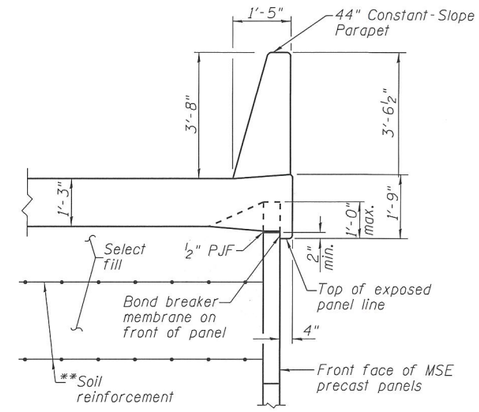

**The M.S.E. wall supplier's internal stability design shall account for the anchorage slab's bearing pressure surcharge of 1.0 ksf and horizontal sliding force of 0.5 kips/ft. of wall.

SECTION THRU CIP BARRIER AND ANCHORAGE SLAB ON PRECAST PANELS

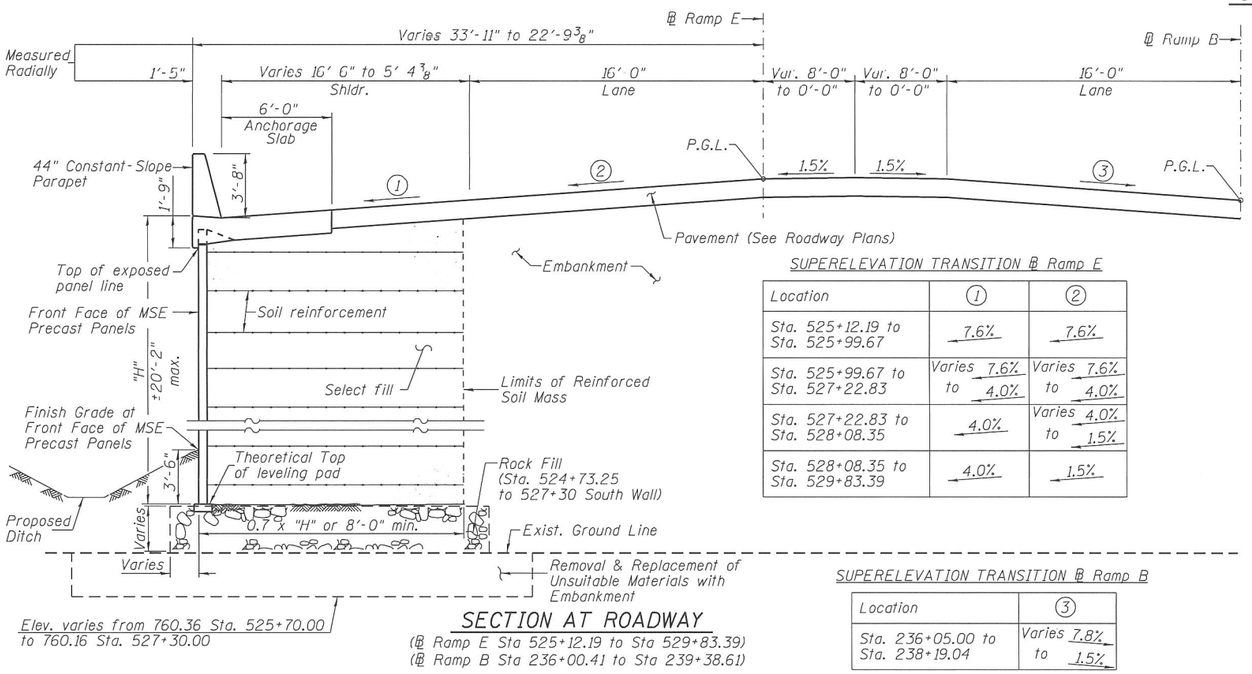

SECTION AT ROADWAY

(℄ Ramp E Sta 525+12.19 to Sta 529+83.39)
(℄ Ramp B Sta 236+00.41 to Sta 239+38.61)

SUPERELEVATION TRANSITION ℄ Ramp E

Location	①	②
Sta. 525+12.19 to Sta. 525+99.67	7.6%	7.6%
Sta. 525+99.67 to Sta. 527+22.83	Varies 7.6% to 4.0%	Varies 7.6% to 4.0%
Sta. 527+22.83 to Sta. 528+08.35	4.0%	Varies 4.0% to 1.5%
Sta. 528+08.35 to Sta. 529+83.39	4.0%	1.5%

SUPERELEVATION TRANSITION ℄ Ramp B

Location	③
Sta. 236+05.00 to Sta. 238+19.04	Varies 7.8% to 1.5%

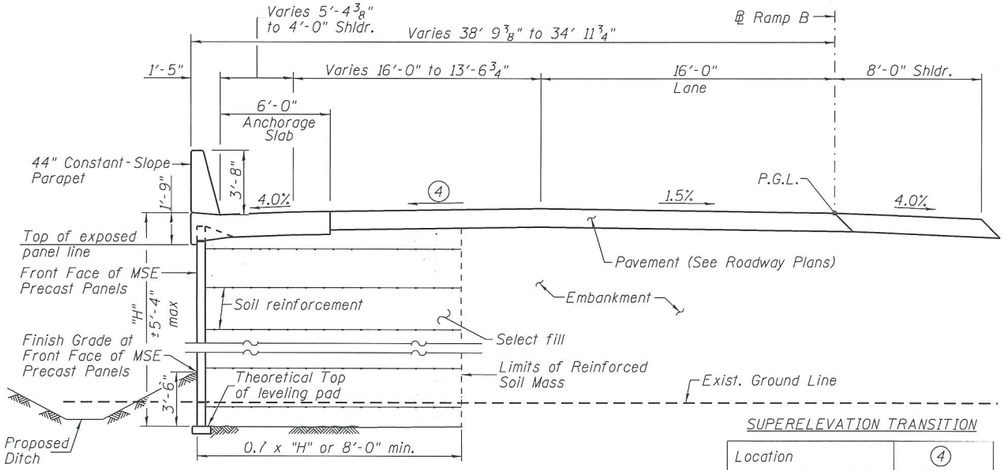

SUPERELEVATION TRANSITION

Location	④
Sta. 239+38.61 to Sta. 240+38.61	Varies 1.5% to 1.5%

SECTION AT ROADWAY

(℄ Ramp B Sta 239+38.61 to Sta 240+00.00)

APPROVED

NOV 25 2019

AS A BASIS FOR PREPARATION OF DETAILED PLANS

L:\IDOT\I186602\Drawings\CADD Sheets\Structural Sheets\TSLs\...

CMT	USER NAME = Gary Davis	DESIGNED L.M.	REVISED
	...\D570897-TSL-(9)_Ramp E over 174 and 157.dgn	CHECKED W.L.B.	REVISED
	PLOT SCALE =	DRAWN G.L.D.	REVISED
	PLOT DATE = NOV. 7, 2019	CHECKED L.M.	REVISED

STATE OF ILLINOIS
DEPARTMENT OF TRANSPORTATION

I-57 & I-74 INTERCHANGE
STRUCTURE NO. 010-1001 – WEST ABUTMENT MSE WALL
SHEET NO. 10 OF 10 SHEETS

F.A.I. RTE.	SECTION	COUNTY	TOTAL SHEETS	SHEET NO.
74 & 57	(10-34-1) HBK	CHAMPAIGN		
		CONTRACT NO. 70B99		
	ILLINOIS	FED. AID PROJECT		