B.M.: #203 Square "□" cut on westerly bridge wall at SW corner of IL. 43 bridge over 95th Street at Sta. 318+38.41, 47.9' LT. with Elev.: 622.23

Existing Structure: S.N. 016-0320 was constructed in 1961, rehabilitated in 1981, 1992 & 1999. Structure consists of 4 continuous spans carrying concrete deck over wide flange beams with three reinforced concrete piers and two pile bent abutments. Structure measures 196'-11" (bk. to bk. abut.) long and 102'-9" (out to out) wide.

Salvage: None

Notes: 1. All proposed Drainage Scuppers will discharge into a closed drainage system.
2. See dimension note on sheet 2.

Staging Note:
Staged construction will be utilized.
Ramp F/H will be closed during Stage I.

SCOPE OF WORK

1. Remove deck and approach pavements.
2. Remove existing beams and bearings.
3. Remove abutment backwall and replace with semi-integral abutment.
4. Modify existing wing walls.
5. Perform epoxy crack injection and formed concrete repairs at abutments and piers.
6. Pour new top of cap concrete portion for piers 1, 2, & 3.
7. Install elastomeric expansion bearings at abutments, piers 1 & 3. Install low profile fixed bearings at pier 2.
8. Install new steel beams with stud shear connectors.
9. Pour new deck and approach slabs.
10. Install guardrails.
11. Raise crash wall to 5'-0" above grade.
12. Perform concrete slope wall repairs.

HIGHWAY CLASSIFICATION

IL Rte. 43 - FAP Rte. 348
Functional Class: Pricipal Arterial
ADT: 36,100 (2015); 31,724 (2032)
ADTT: 3,971 (2015); 3,490 (2032)
Design Speed: 45 m.p.h.
Posted Speed: 40 m.p.h.
Two Way Traffic Direction Distribution: 50:50
US Rte. 12/20 - FAP Rte. 29
Functional Class: Principal Arterial
ADT: 29,700 (2015); 46,453 (2032)
ADTT: 2,079 (2012); 3,252 (2032)
Design Speed: 45 m.p.h.
Posted Speed: 40 m.p.h.
Two Way Traffic Direction Distribution: 50:50

DESIGN SPECIFICATIONS

2017 AASHTO LRFD Bridge Design Specifications Customary US Units Eighth Edition.

DESIGN STRESSES

FIELD UNITS (New Construction)

f'c = 4,000 psi (superstructure concrete)
f'c = 3,500 psi
fy = 60,000 psi (reinf.)
fy = 50,000 psi (M270 Grade 50 structural steel)

FIELD UNITS (Exsiting Construction)

fc = 1,400 psi (without earth pressure)
fc = 1,000 psi (with earth pressure)
fs = 20,000 psi (reinforcing steel)
fs = 18,000 psi (structural steel)

SEISMIC DATA

Seismic Performance Category (SPC) = A
Bedrock Acceleration Coefficient (A) = 0.04g
Site Coefficient (S) = 1.0

LOADING HL-93

Allow 50#/sq. ft. for future wearing surface.

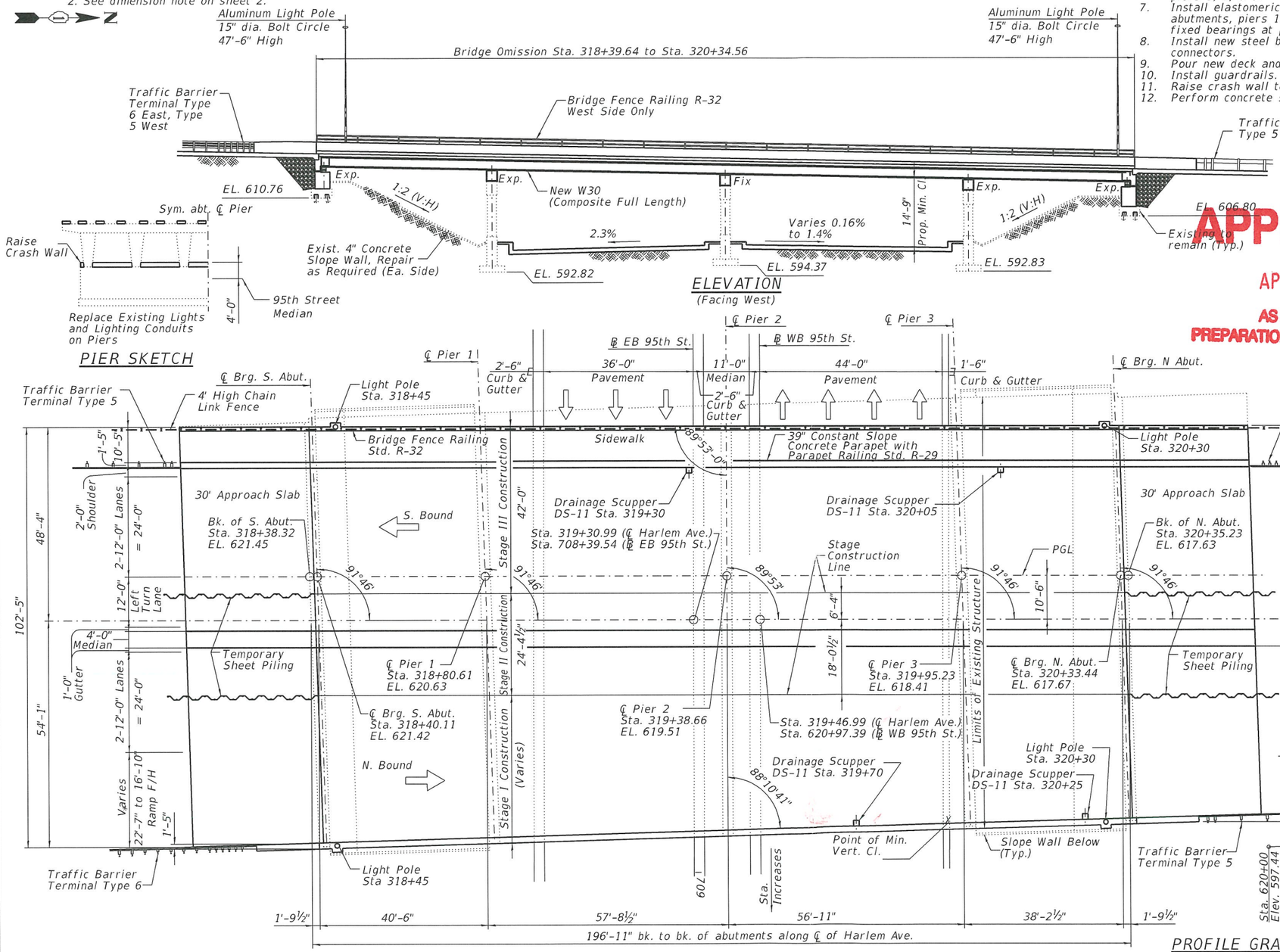

PLAN

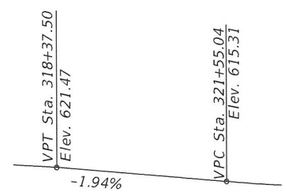

PROFILE GRADE LINE
IL 43 (HARLEM AVE.)
(10.5' Left)

PROFILE GRADE US 12/20 (95th St.)
WEST BOUND BASE LINE

Range 12E-13E - 3rd PM

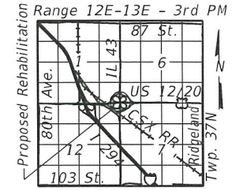

LOCATION SKETCH

SCOPE OF WORK

GENERAL PLAN & ELEVATION
IL 43 (HARLEM AVE.), FAP 348 OVER
US 12/20 (95th ST.), FAP 29
SECTION 3128-Z-1-R&RS
COOK COUNTY
STATION 319+38.64
STRUCTURE NO. 016-0320

APPROVED
APR 16 2019
AS A BASIS FOR PREPARATION OF DETAILED PLANS

HOH — HARRY G. HOFTER ASSOCIATES, INC. DESIGN AND CONSULTING ENGINEERS
PROJECT NUMBER 3730
One N LaSalle, 7th Floor Chicago, Illinois 60602 312/346-8131

USER NAME = jpmorgan	DESIGNED - RAS	REVISED - To IDOT 10/05/18	STATE OF ILLINOIS DEPARTMENT OF TRANSPORTATION		
	DRAWN - HE	REVISED - To IDOT 03/22/19			
PLOT SCALE = 26:8.0006 ':' / in.	CHECKED - DNB	REVISED -		SHEET 1 OF 3 SHEETS	
PLOT DATE = 3/22/2019	DATE -	REVISED -			

F.A. RTE.	SECTION	COUNTY	TOTAL SHEETS	SHEET NO.
348	3128-Z-1-R&RS	COOK		
		CONTRACT NO. 60R49		
	ILLINOIS FED. AID PROJECT			

MODEL: Default
FILE NAME: H:\Projects\3730\Drawings\CADD Sheets\Structural\0320-Harlem-95th\TS&I\General Plan -0320 Sheet 1.dgn

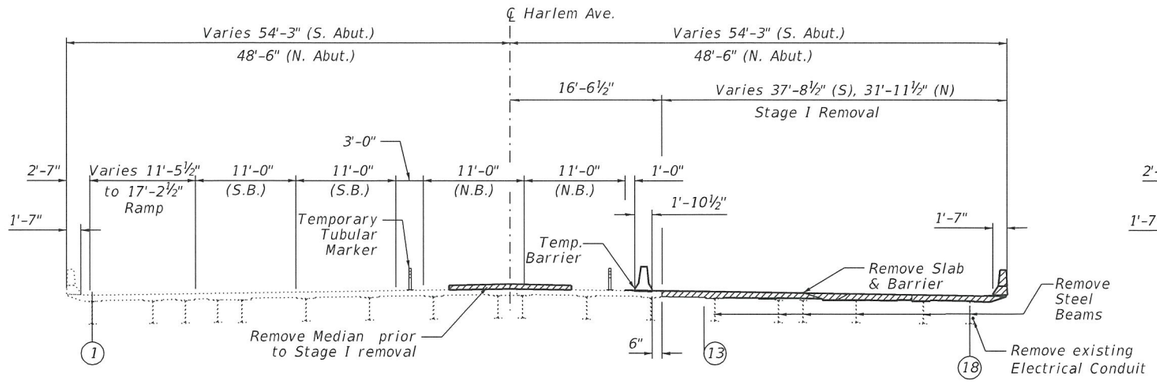

STAGE I REMOVAL
(Looking North)

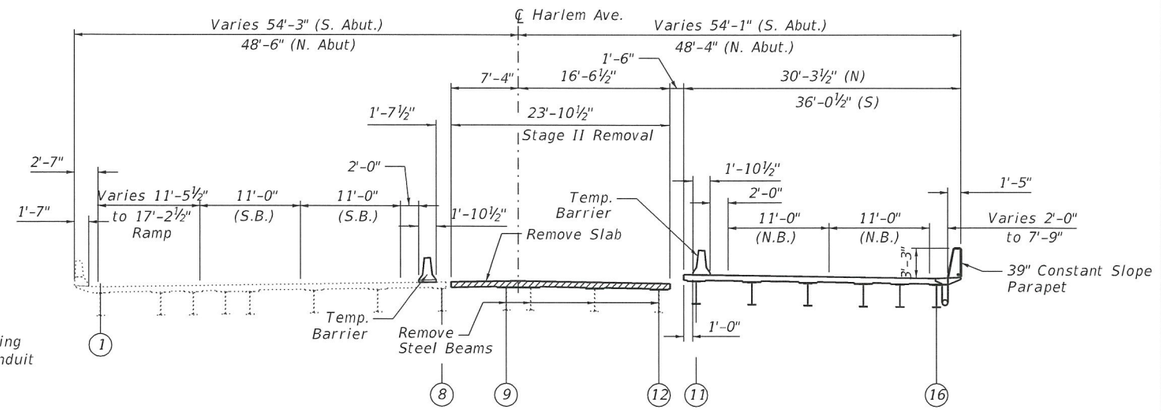

STAGE II REMOVAL
(Looking North)

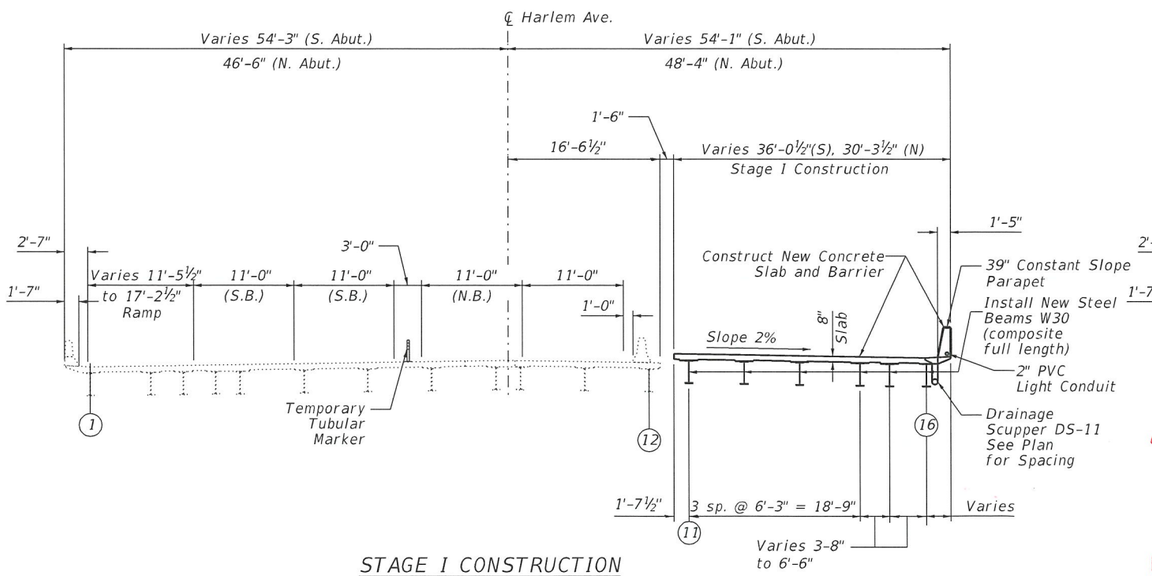

STAGE I CONSTRUCTION
(Looking North)

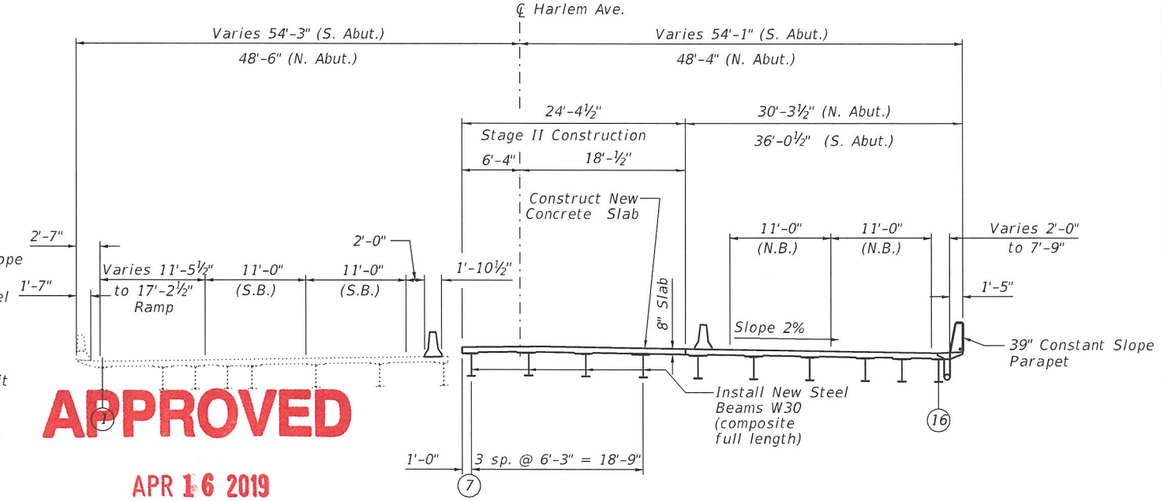

APPROVED
APR 16 2019
AS A BASIS FOR PREPARATION OF DETAILED PLANS

STAGE II CONSTRUCTION
(Looking North)

Note:
Horizontal dimensions are at Right ∠ to the ℄ of Harlem Ave. except as noted.

SECTIONS & DETAILS SHEET 1 OF 2
IL 43 (HARLEM AVE.), FAP 348 OVER
US 12/20 (95th ST.), FAP 29
SECTION 3128-Z-1-R&RS
COOK COUNTY
STATION 319+38.64
STRUCTURE NO. 016-0320

MODEL: Default
FILE NAME: H:\Projects\3730\Drawings\CADD Sheets\Structural\0320-Harlem-95th\TS&L\Stage Construction Details Sheet 2.dgn

HOH HARRY O. HEFTER ASSOCIATES, INC. DESIGN AND CONSULTING ENGINEERS PROJECT NUMBER 3730 One N LaSalle, 7th Floor Chicago, Illinois 60602 312/346-8131	USER NAME = jomorgan	DESIGNED - RAS	REVISED - To IDOT 10/05/18	STATE OF ILLINOIS DEPARTMENT OF TRANSPORTATION	
		DRAWN - HE	REVISED - To IDOT 03/22/19		
	PLOT SCALE = 16:0.0000 ':" / in.	CHECKED - DNB	REVISED -		
	PLOT DATE = 3/22/2019	DATE -	REVISED -		SHEET 2 OF 3 SHEETS

F.A. RTE.	SECTION	COUNTY	TOTAL SHEETS	SHEET NO.
348	3128-Z-1-R&RS	COOK		
		CONTRACT NO. 60R49		
		ILLINOIS FED. AID PROJECT		

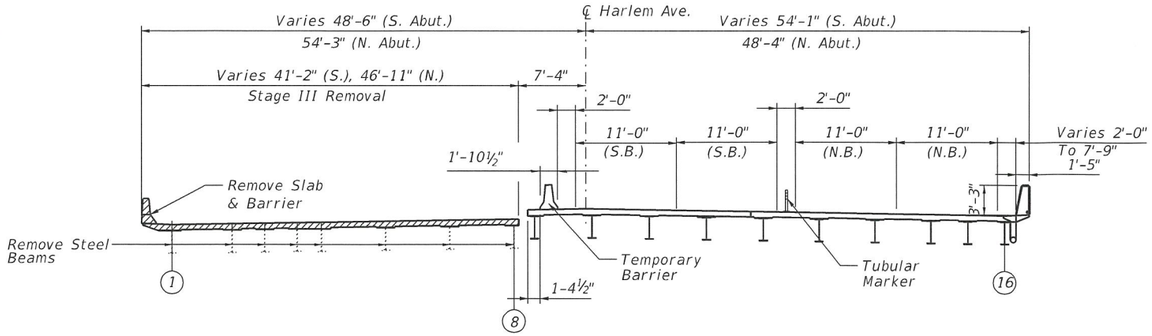

STAGE III REMOVAL

(Looking North)

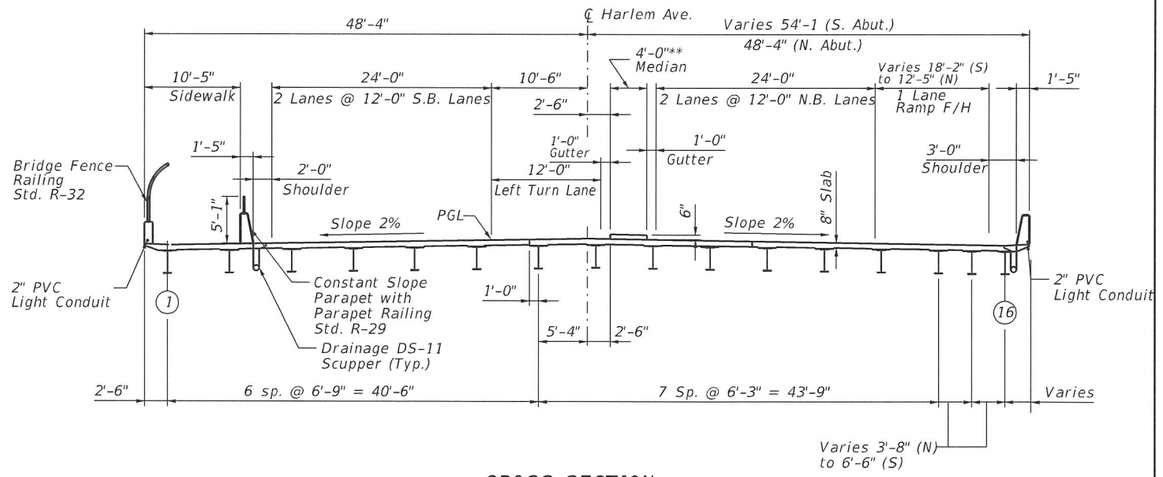

CROSS SECTION

(Looking North)

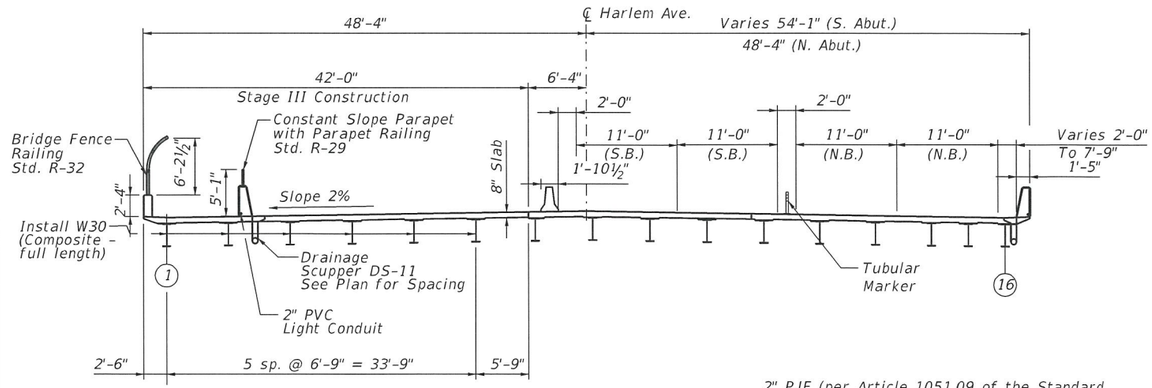

STAGE III CONSTRUCTION

(Looking North)

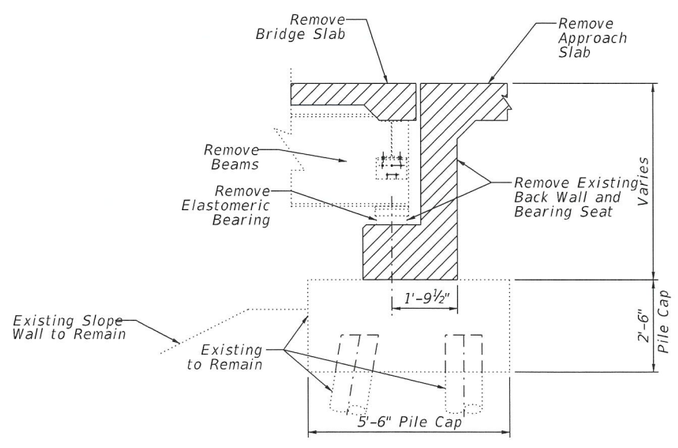

ABUTMENT REMOVAL

(Horiz. dim. @ Rt. ℄'s)

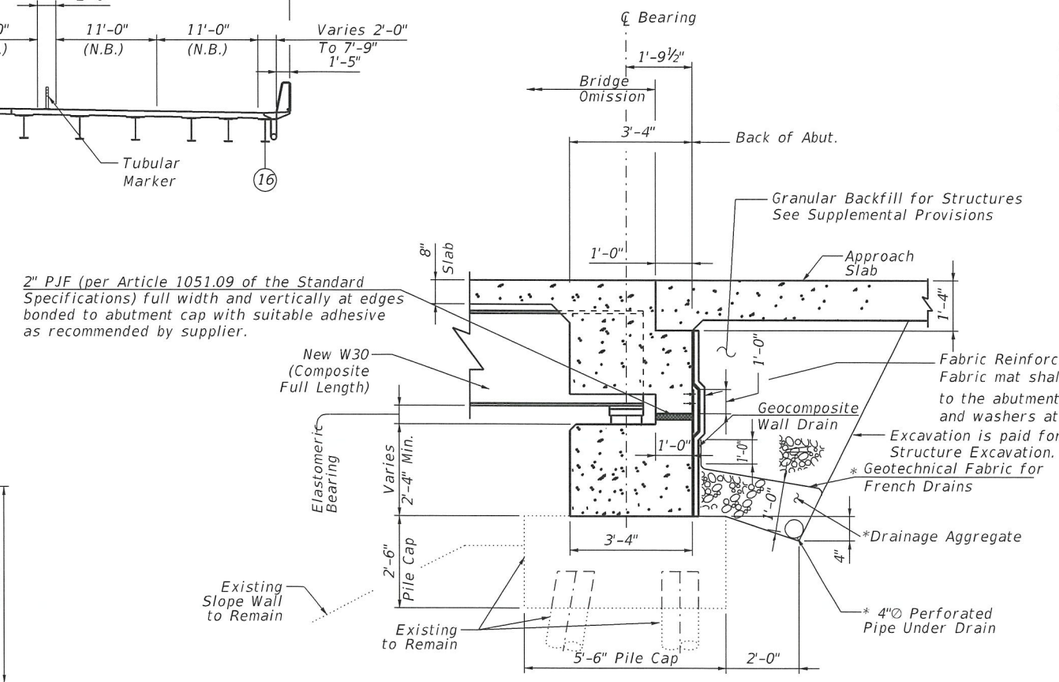

SECTION THRU SEMI-INTEGRAL ABUTMENT

(Horiz. dim. @ Rt. ℄'s)

*Included in the cost of Pipe Underdrains for Structures.

Note:
All drainage system components shall extend to 2'-0" from the end of each wingwall except an outlet pipe shall extend until intersecting with the side slopes. The pipes shall drain into concrete headwalls. (See Article 601.05 of the Standard Specifications and Highway Standard 601101).

Notes:
Horizontal dimensions are at Right ∠ to the ℄ of Harlem Ave. except as noted.
** Proposed median to be constructed after Stage III is complete.

APPROVED

APR 16 2019

AS A BASIS FOR PREPARATION OF DETAILED PLANS

SECTIONS & DETAILS SHEET 2 OF 2
IL 43 (HARLEM AVE.), FAP 348 OVER US 12/20 (95th ST.), FAP 29
SECTION 3128-Z-1-R&RS
COOK COUNTY
STATION 319+38.64
STRUCTURE NO. 016-0320

MODEL: Default
FILE NAME: H:\Projects\3730\Drawings\CAD3 Sheets\Structural\0320-Harlem-95thIT56\Stage Construction Details Sheet 3.dgn

HOH HARRY O. HEFTER ASSOCIATES, INC. DESIGN AND CONSULTING ENGINEERS
PROJECT NUMBER 3730
One N LaSalle, 7th Floor Chicago, Illinois 60602 312/346-1631

USER NAME = jpmorgan	DESIGNED - RAS	REVISED -	To IDOT 10/05/18
	DRAWN - HE	REVISED -	To IDOT 03/22/19
PLOT SCALE = 16:0.0000 ':' / in.	CHECKED - DNB	REVISED -	
PLOT DATE = 3/22/2019	DATE -	REVISED -	

STATE OF ILLINOIS
DEPARTMENT OF TRANSPORTATION

SHEET 3 OF 3 SHEETS

F.A. RTE.	SECTION	COUNTY	TOTAL SHEETS	SHEET NO.
348	3128-Z-1-R&RS	COOK		
		CONTRACT NO. 60R49		
	ILLINOIS FED. AID PROJECT			