Bench Mark: BM-4, chiseled square on NE corner of crashwall @ existing Pier E20, just East of Moe Drive, on existing S.N. 016-1075 carrying NB I-55 to NB L.S.D., Elev. 594.65 (NAVD 88).

Exist. Structure: (No salvage) The West & East Walls were built in 1965 & carry NB Lake Shore Drive traffic to S.N. 016-1048 which continues over Moe Drive, Mines Drive, CNRR, Metra Electric RR & McCormick Place Busway. Both walls, 147'-0" in length, are part of a concrete vaulted terminal structure with a single span, monolithically built, concrete deck measuring 12½" thick, supported on each side wall of the vault & running parallel to the deck's center line.

Traffic Control: For Stage Ia, maintain 1-lane of NW traffic on northeast half of existing S.N. 016-1048 during construction of west half proposed S.N. 016-0746 & west half Spans 21W-22W (Unit 4) of proposed S.N. 016-1505. For Stage Ib, continue to maintain 1-lane of NW traffic on northeast half of existing S.N. 016-1048. For Stage IIa, shift NW traffic to 1-lane on southwest half of proposed S.N. 016-0746 & proposed S.N. 016-1505 during construction of east half of S.N. 016-0746 & east half Spans 21W-22W of proposed S.N. 016-1505 (Unit 4). For Stage IIb, continue to maintain 2-lane of NW traffic on proposed S.N. 016-0746 & S.N. 016-1505 & merge them before proposed S.N. 016-1504. Temporary lane closures may be required for Lake Shore Drive, Fort Dearborn Drive, & existing S.N. 016-1075.

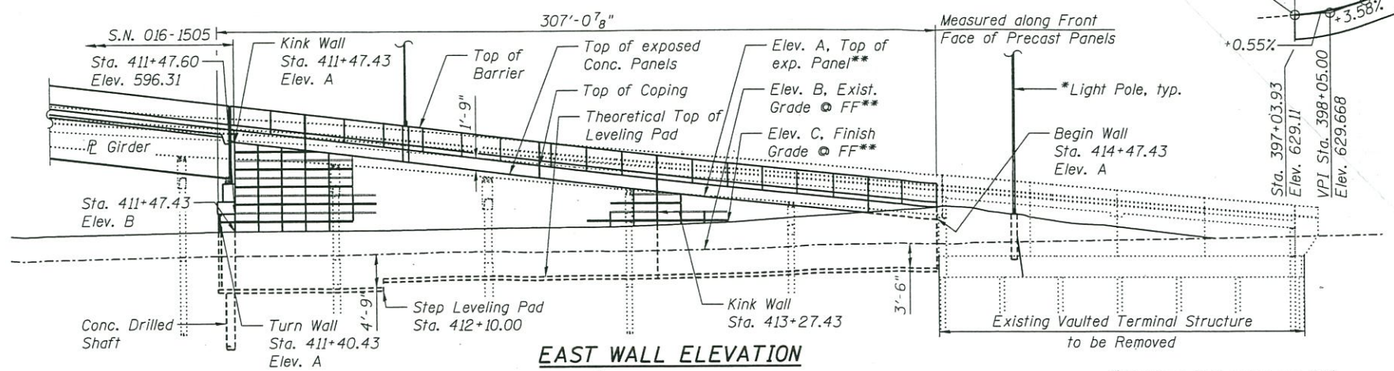

EAST WALL ELEVATION

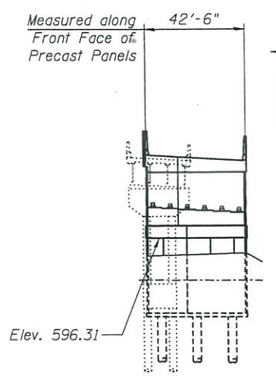

FRONT ELEVATION

(Looking South)

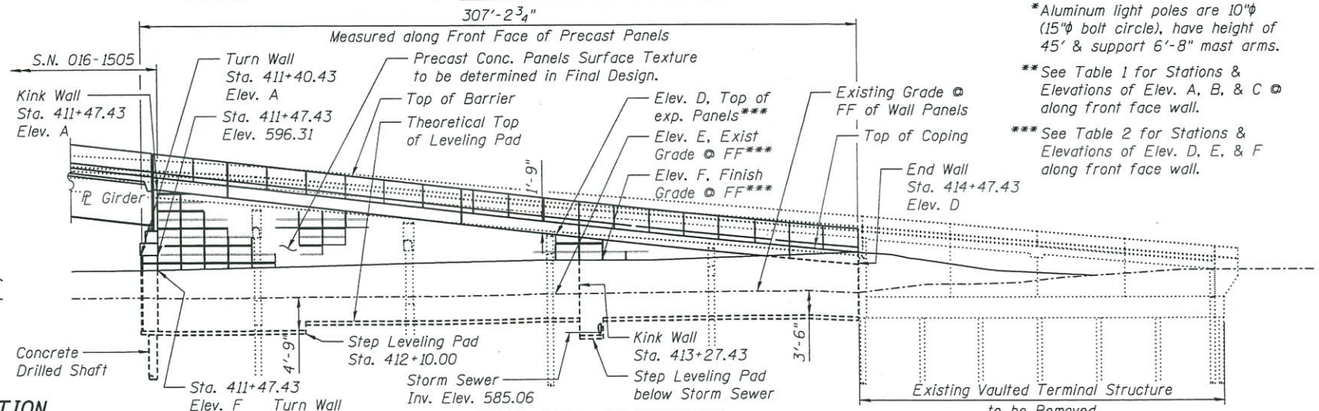

WEST WALL ELEVATION

*Aluminum light poles are 10"ϕ (15"ϕ bolt circle), have height of 45' & support 6'-8" mast arms.

** See Table 1 for Stations & Elevations of Elev. A, B, & C @ along front face wall.

*** See Table 2 for Stations & Elevations of Elev. D, E, & F along front face wall.

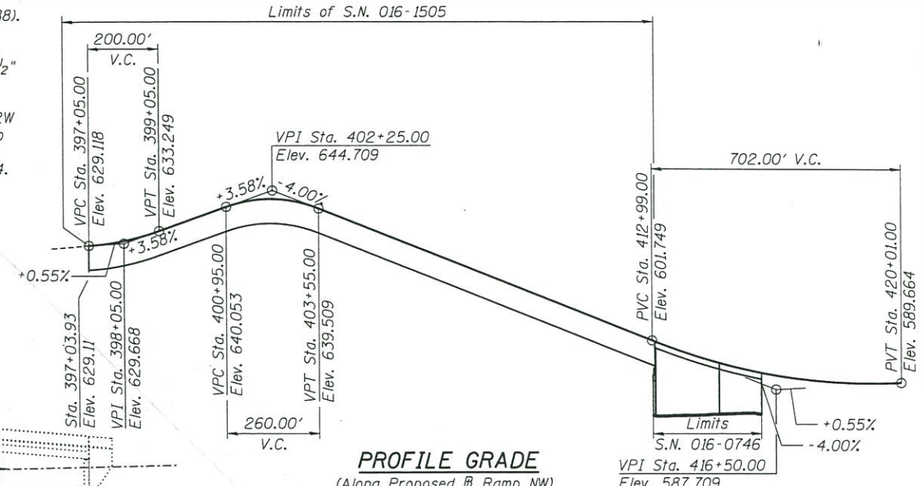

PROFILE GRADE

(Along Proposed ℄ Ramp NW)

TABLE 1

Station	Elev. A	Elev. B	Elev. C
411+40.43	596.33	591.16	591.12
411+47.43	606.57	591.16	591.33
411+50.00	606.47	591.16	591.41
412+00.00	604.44	590.88	592.60
412+50.00	602.42	591.01	592.95
413+00.00	600.39	591.12	593.31
413+27.43	599.30	591.13	593.39
413+50.00	598.46	591.14	593.47
414+00.00	596.70	591.62	593.49
414+47.43	595.18	592.39	593.90

TABLE 2

Station	Elev. D	Elev. E	Elev. F
411+40.43	N/A	590.90	592.64
411+41.06	596.48	590.90	592.66
411+47.43	606.60	590.90	592.90
411+50.00	606.50	590.89	592.99
412+00.00	604.60	590.82	593.85
412+50.00	602.60	590.82	594.22
413+00.00	600.60	590.72	594.58
413+27.43	599.53	590.84	594.68
413+50.00	598.58	590.93	594.76
414+00.00	596.83	591.04	594.73
414+47.43	595.31	590.92	594.65

NOTES

1. Horizontal dimensions measured along front face of precast panels.
2. Stations & Offsets are given to front face of precast panels relative to proposed ℄ Ramp NW.
3. See Sheet 3 for typical sections & details.

DESIGN SPECIFICATIONS

2012 AASHTO LRFD
Bridge Design Specifications,
6th Edition with 2013 Interim Revisions

DESIGN STRESSES

FIELD UNITS

f'c = 3,500 psi
fy = 60,000 psi (Reinforcement)

PRECAST UNITS

f'c = 4,500 psi (Precast Panels)

HIGHWAY CLASSIFICATION

F.A.P. Rte. 341 U.S. Rte. 41 (NB)
to F.A.I. Rte. 55 I-55 (SB)
Functional Class: Interstate (Ramp)
ADT: 19,529 (2010); 22,000 (2040)
ADTT: 332 (2010); 374 (2040)
DHV: 1,889 (2010)
Design Speed: 35 m.p.h.
Posted Speed: 35 m.p.h.
One-Way Traffic

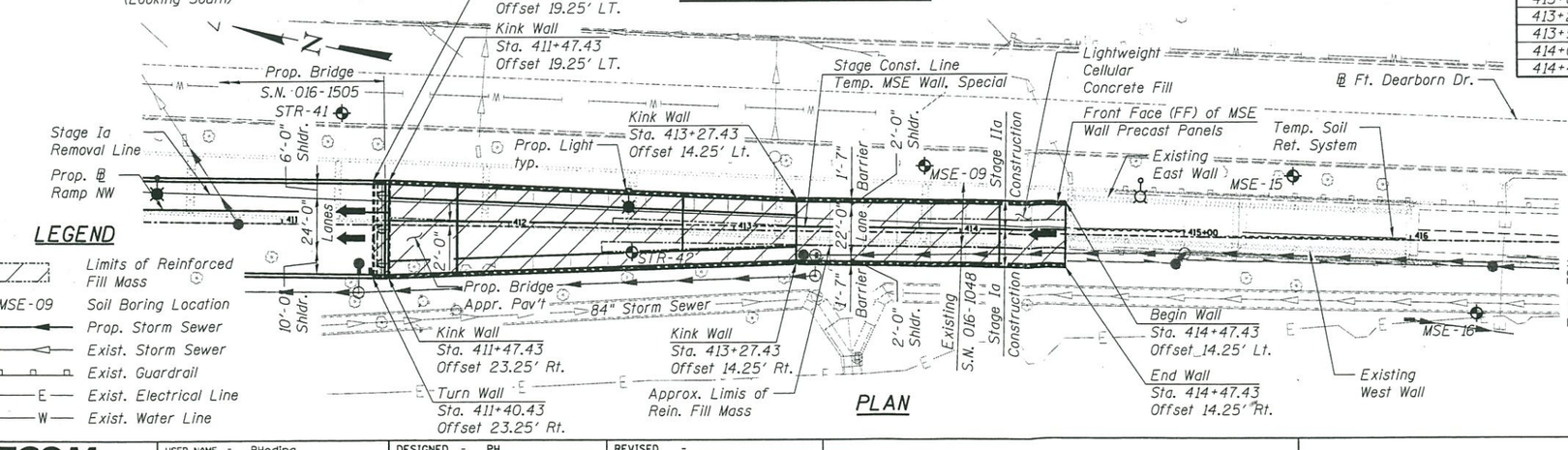

PLAN

LEGEND

- Limits of Reinforced Fill Mass
- MSE-09 Soil Boring Location
- Prop. Storm Sewer
- Exist. Storm Sewer
- Exist. Guardrail
- E — E Exist. Electrical Line
- W — W Exist. Water Line

LOCATION SKETCH

APPROVED
DEC 05 2014
AS A BASIS FOR PREPARATION OF DETAILED PLANS

GENERAL PLAN & ELEVATION
NB LAKE SHORE DRIVE TO SB I-55
F.A.I. RTE. 55 - SEC. 2010-080-B
COOK COUNTY
STA. 411+40.43 TO STA. 414+47.43
STRUCTURE NO. 016-0746

0160746-60L70-TSL-001.dgn

AECOM RME Rubinos & Mesia Engineers, Inc.

USER NAME = PHodina	DESIGNED - PH	REVISED -	
	CHECKED - PK	REVISED -	
PLOT SCALE =	DRAWN - PH	REVISED -	
PLOT DATE = 11/19/2014	CHECKED - PK	REVISED -	

STATE OF ILLINOIS
DEPARTMENT OF TRANSPORTATION

SHEET NO. 1 OF 3 SHEETS

F.A.I. RTE.	SECTION	COUNTY	TOTAL SHEETS	SHEET NO.
55	2010-080-B	COOK	3	1
		CONTRACT NO. 60L70		
		ILLINOIS FED. AID PROJECT		

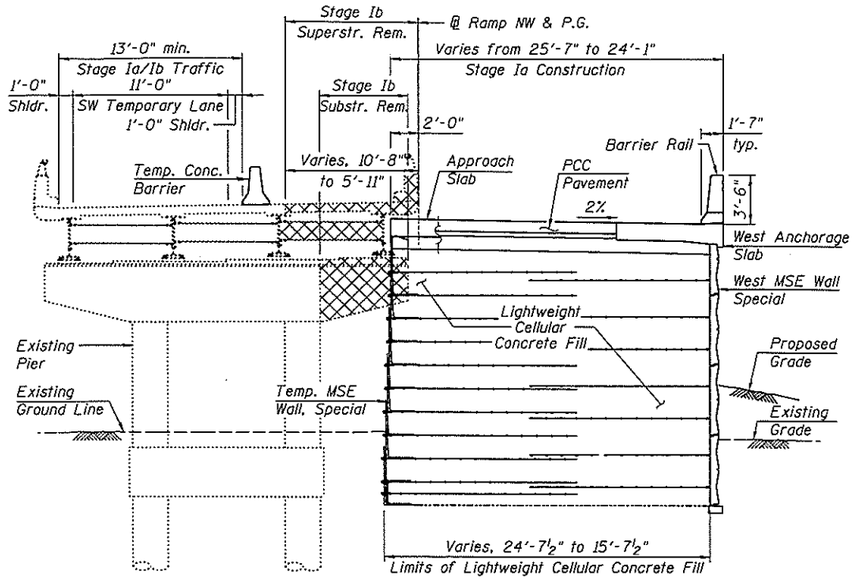

STAGE Ia - TYPICAL SECTION
(Sta. 411+40.43 to Sta. 413+27.47)
(Looking South)

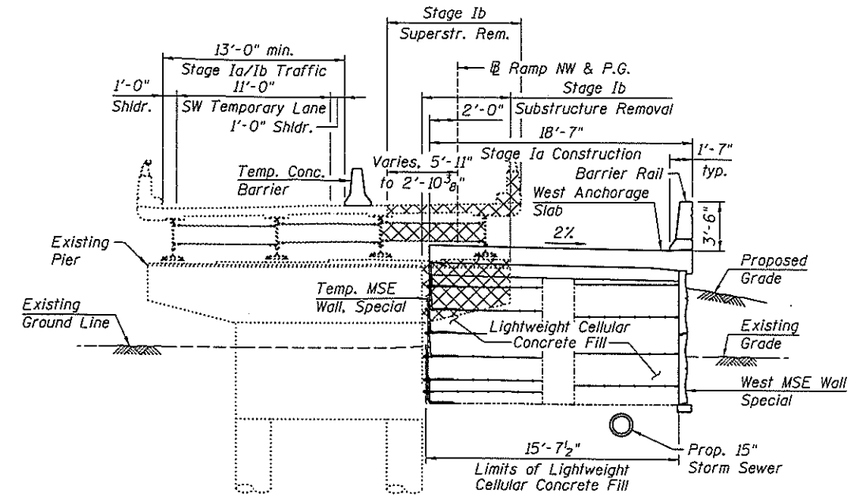

STAGE Ia - TYPICAL SECTION
(Sta. 413+27.47 to Sta. 414+47.43)
(Looking South)

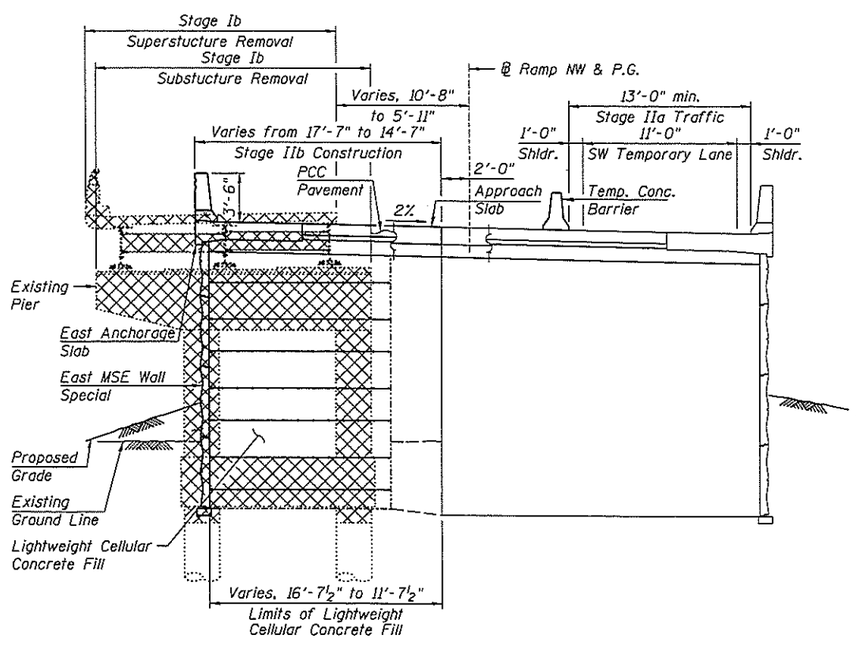

STAGE IIa - TYPICAL SECTION
(Sta. 411+40.43 to Sta. 413+27.47)
(Looking South)

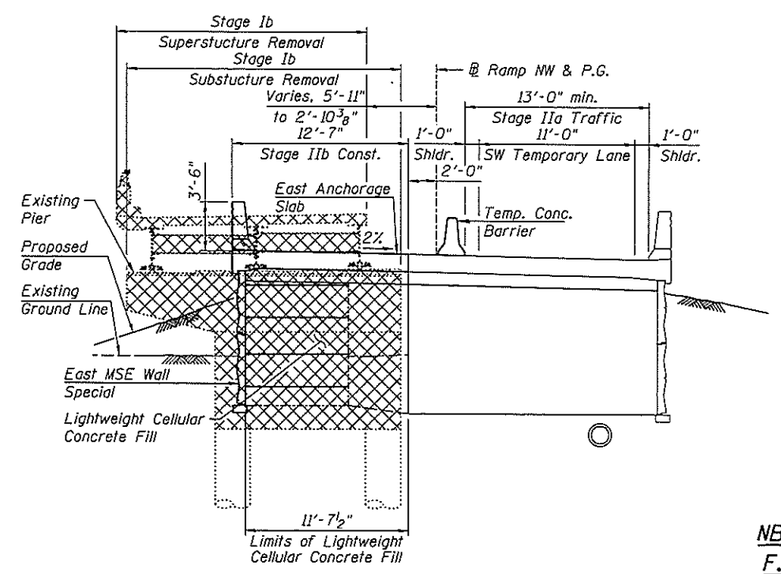

STAGE IIa - TYPICAL SECTION
(Sta. 413+27.47 to Sta. 414+47.43)
(Looking South)

NOTES:
1. Hatched area indicates removal of Existing Structures.

STAGE CONSTRUCTION
NB LAKE SHORE DRIVE TO SB I-55
F.A.I. RTE. 55 - SEC. 2010-080-B
COOK COUNTY
STA. 411+40.43 TO STA. 414+47.43
STRUCTURE NO. 016-0746

0160746-60L70-TSL-002.dgn

AECOM RME Rubinos & Mesta Engineers, Inc.

USER NAME = PHodina	DESIGNED - PH	REVISED -	
	CHECKED - BG	REVISED -	
PLOT SCALE =	DRAWN - PH	REVISED -	
PLOT DATE = 11/19/2014	CHECKED - BG	REVISED -	

STATE OF ILLINOIS
DEPARTMENT OF TRANSPORTATION

SHEET NO. 2 OF 3 SHEETS

F.A.I. RTE.	SECTION	COUNTY	TOTAL SHEETS	SHEET NO.
55	2010-080-B	COOK	3	2
		CONTRACT NO. 60L70		
		ILLINOIS FED. AID PROJECT		

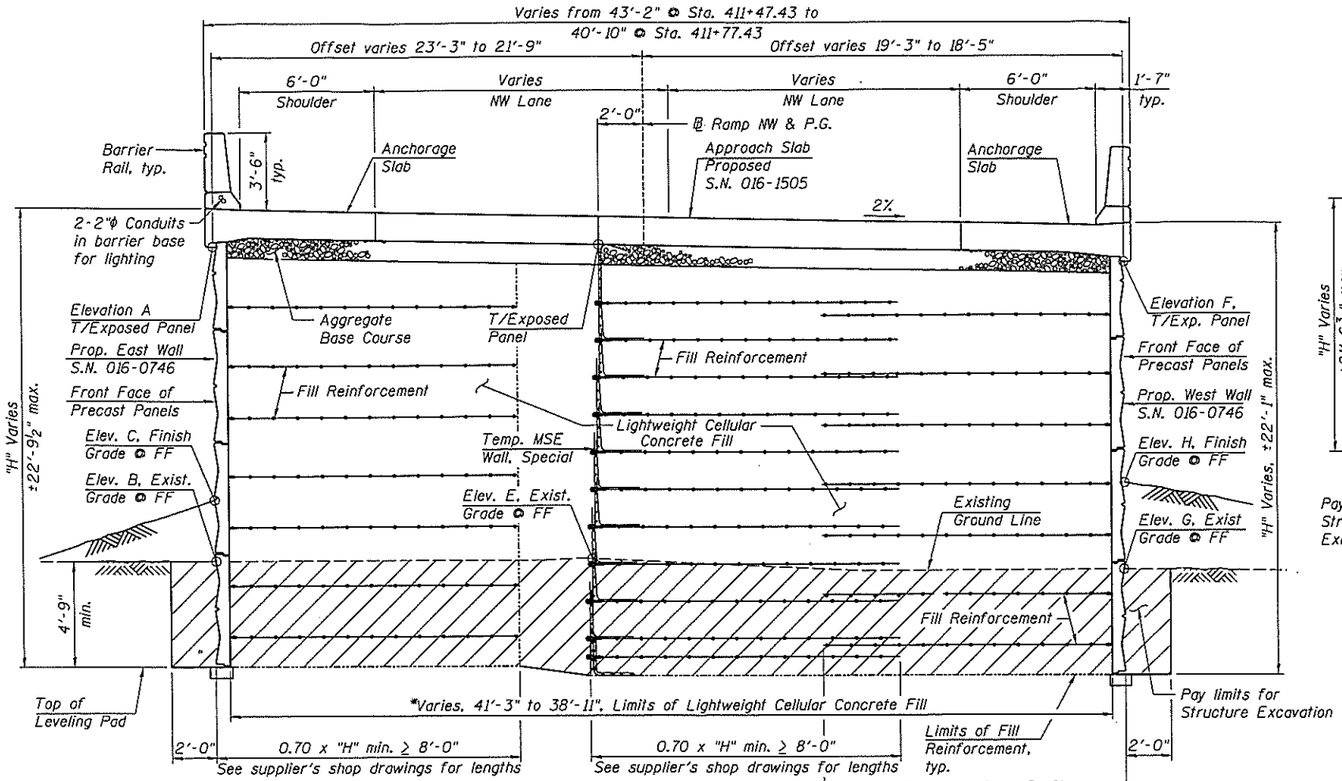

TYPICAL SECTION
(at Bridge Approach Slab)
(Sta. 411+47.43 to Sta. 411+77.23)
(Looking South)

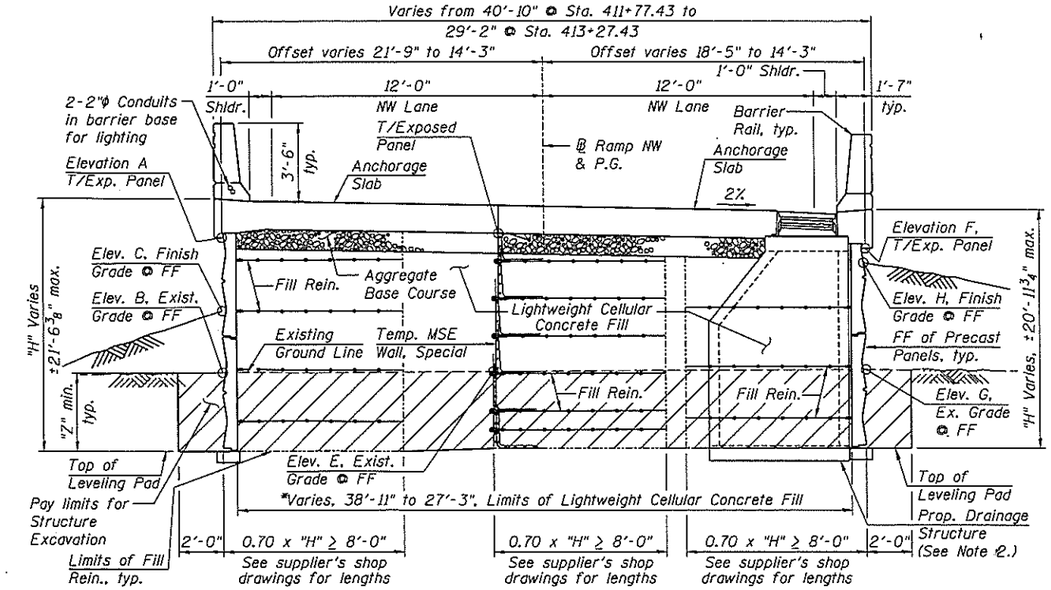

TYPICAL SECTION
(Sta. 411+77.23 to Sta. 414+47.43)
(Looking South)

Z = 4'-9" from Sta. 411+77.23 to Sta. 412+10.00
Z = 3'-6" from Sta. 412+10.00 to Sta. 414+47.43

*Lightweight Cellular Concrete vertical limits from bottom of Aggregate Base Course to bottom of Structure Excavation.

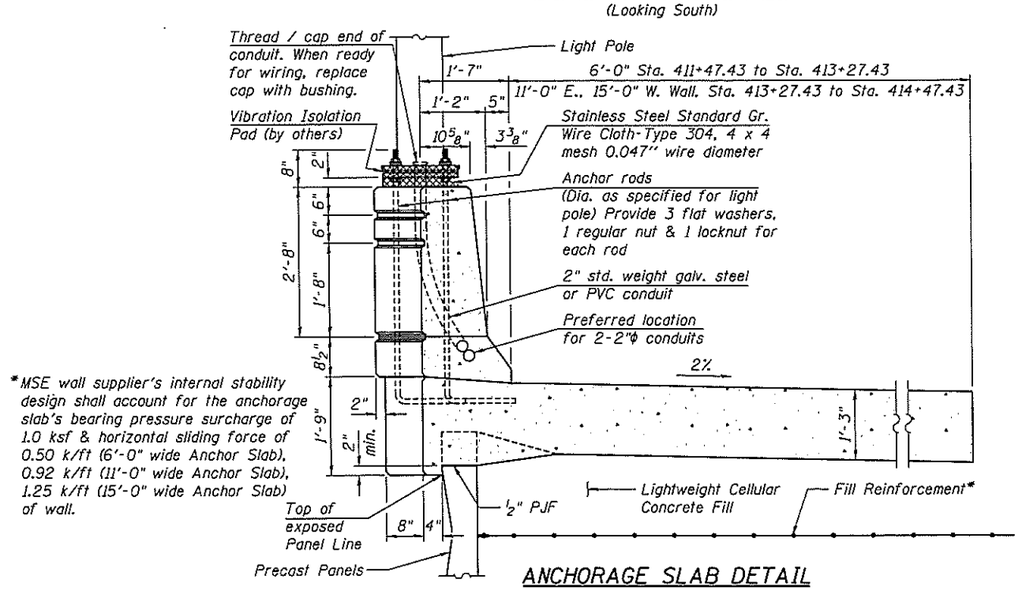

*MSE wall supplier's internal stability design shall account for the anchorage slab's bearing pressure surcharge of 1.0 ksf & horizontal sliding force of 0.50 k/ft (6'-0" wide Anchor Slab), 0.92 k/ft (11'-0" wide Anchor Slab), 1.25 k/ft (15'-0" wide Anchor Slab) of wall.

ANCHORAGE SLAB DETAIL

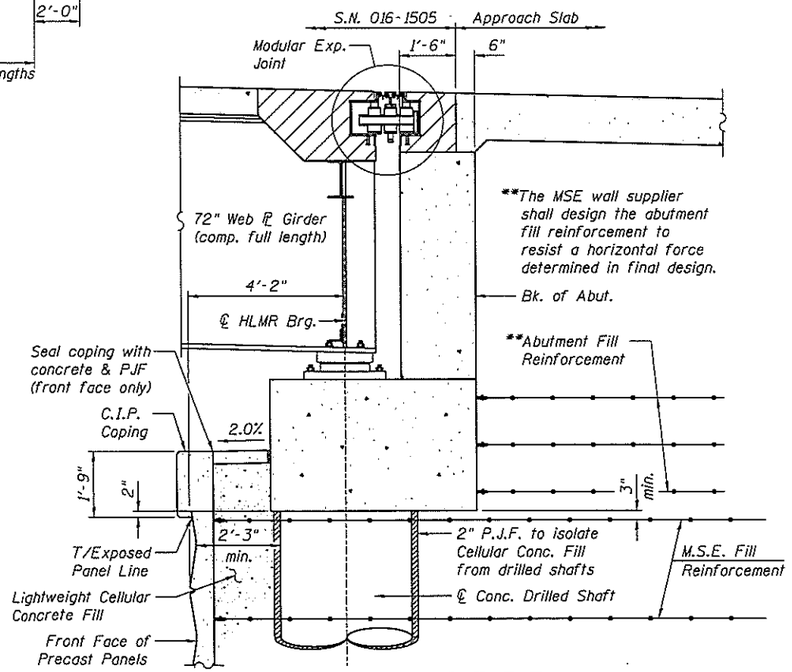

SECTION THRU ABUTMENT

NOTES

1. MSE wall supplier shall design MSE Wall, Special & Temporary MSE Wall, Special using granular reinforced mass with minimum effective internal friction angle of 34 degrees & unit weight of 120 lbs/cu. ft. For embankment behind granular reinforced mass; an embankment unit weight of 120 lbs/cu. ft & an effective friction angle of 30 degrees shall be used in the wall system design.
2. MSE Supplier to design load transfer system within reinforced fill mass to accommodate drainage structures & pipes.

SECTIONS & DETAILS
NB LAKE SHORE DRIVE TO SB I-55
F.A.I. RTE. 55 - SEC. 2010-080-B
COOK COUNTY
STA. 411+40.43 TO STA. 414+47.43
STRUCTURE NO. 016-0746

0160746-60L70-TSL-003.dgn

AECOM RME Rubinos & Mesia Engineers, Inc.

USER NAME = PHodina	DESIGNED - PH	REVISED -	
	CHECKED - PK	REVISED -	
PLOT SCALE =	DRAWN - AMV	REVISED -	
PLOT DATE = 11/19/2014	CHECKED - PK	REVISED -	

STATE OF ILLINOIS
DEPARTMENT OF TRANSPORTATION

SHEET NO. 3 OF 3 SHEETS

F.A.I. RTE.	SECTION	COUNTY	TOTAL SHEETS	SHEET NO.
55	2010-080-B	COOK	3	3
		CONTRACT NO. 60L70		
		ILLINOIS FED. AID PROJECT		