Benchmark: Cut Cross on NW flange bolt of fire hydrant @ NW corner of Canal Street & Redspoon Street. Elev. 596.18.

Existing Structure: Structure No. 016-0777 was originally built in 1966 as CH-55A, Section 055A-0103-MFT and repaired in 1986, 1990 and 1998. In 1999 a concrete overlay was installed. The back to back existing abutment length is 1123'-1¼" and the out to out width is 68'-0". The south approach spans (Spans 1 through 8) consist of simple span PPC Box Beams. The substructure consists of a spill through abutment on steel piles and rectangular concrete column bents on steel piles. The existing south approach structure will be removed and replaced. Existing Pier 9 bridge seat for span 5 will be partially removed and rebuilt. One lane of traffic shall be maintained in each direction, and one sidewalk, using staged construction.

Salvage: Existing light poles, aluminum tube railing and stair railings are to be removed and reinstalled.

** Existing Light Poles to be removed and reinstalled with new luminaries as specified in lighting schedule

DESIGN SPECIFICATIONS

2012 AASHTO LRFD Bridge Design Specifications, 6th Edition, with 2013 Interims
2002 AASHTO Standard Specifications for Highway Bridges, 17th Edition (Existing Pier 9)

HIGHWAY CLASSIFICATION

FAP Rte. 370 - Western Avenue
Functional Class: Other Principal Arterial (Urban)
ADT: 8200 (2010); 14,000 (2030)
ADTT: 574 (2010); 1064 (2030)
DHV: 820 (2010); 1400 (2030)
Design Speed: 35 m.p.h.
Posted Speed: 35 m.p.h.
Two-Way Traffic
Directional Distribution: 50/50

FAU Rte. 1596 - Broadway Avenue
Functional Class: Minor Arterial
ADT: 4300 (2010); 4429 (2032)
ADTT: 86 (2010); 89 (2032)
DHV: 430 (2010); 442 (2032)
Design Speed: 30 m.p.h.
Posted Speed: 30 m.p.h.
Two-Way Traffic
Directional Distribution: 50/50

FAU Rte. None - Canal Street
Functional Class: Local Road
ADT: 317 (2013); 320 (2035)
ADTT: 1 (2013); 1 (2035)
DHV: 32 (2013); 33 (2035)
Design Speed: 20 m.p.h.
Posted Speed: 20 m.p.h.
One-Way Traffic
Directional Distribution: 100/0

LOADING HL-93

Allow 50#/sq. ft. for future wearing surface.

LOADING HS20-44

(Exist. Pier 9)
Allow 15#/sq. ft. for future wearing surface.

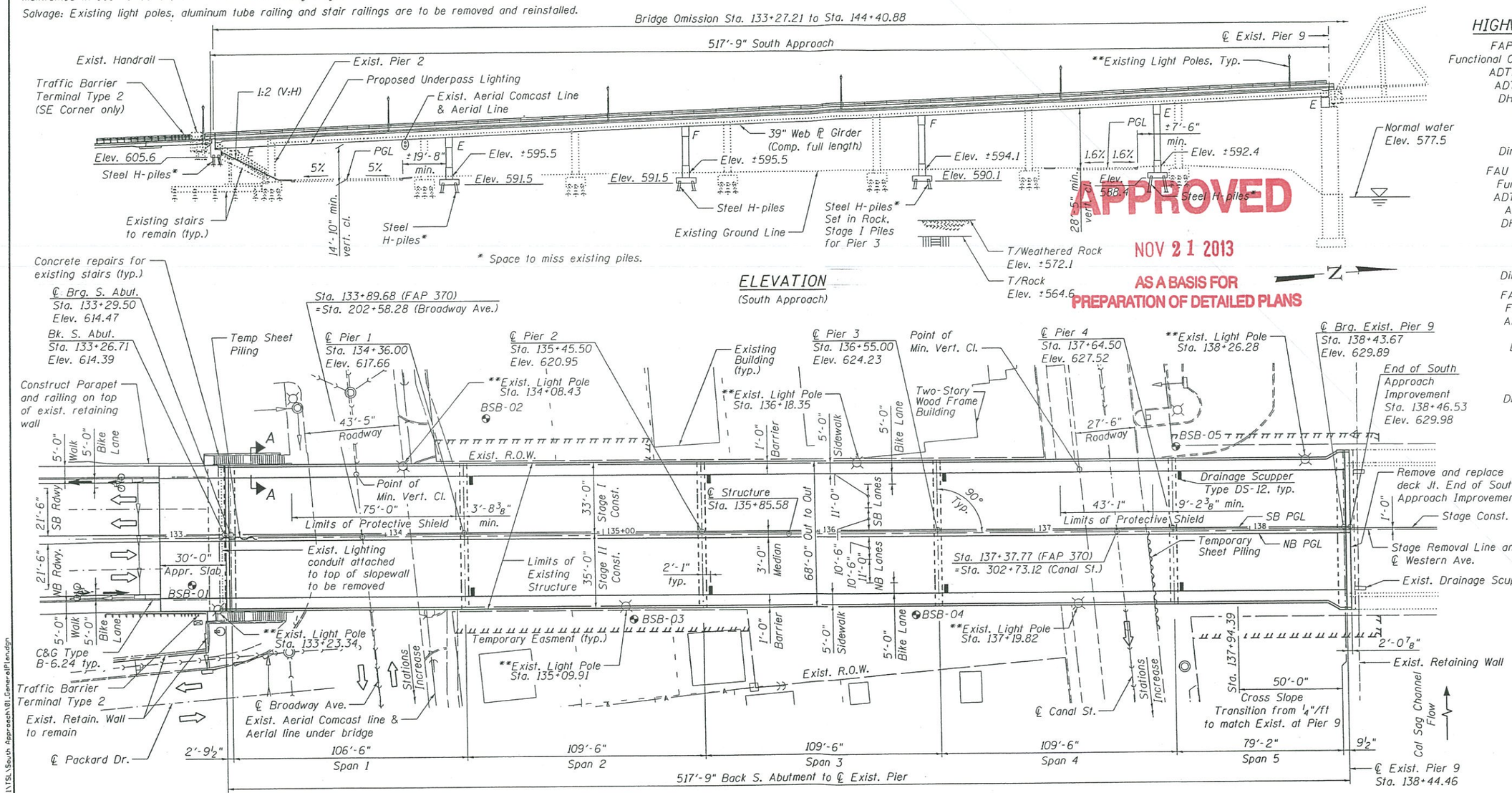

PLAN

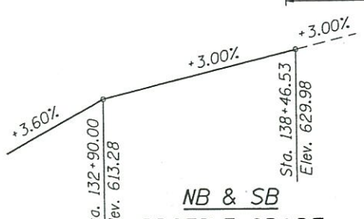

NB & SB
PROFILE GRADE
F.A.P. Rte. 370 - Western Ave.

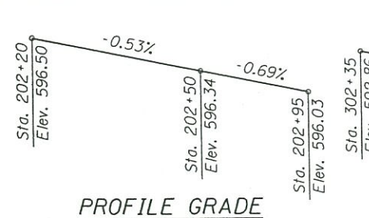

PROFILE GRADE
F.A.U. Rte. 1596 - Broadway Ave.
(Exist. P.G.)

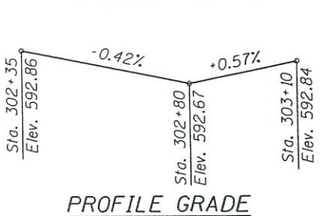

PROFILE GRADE
Canal St.
(Exist. P.G.)

DESIGN STRESSES

FIELD UNITS (New Construction)
f'c = 3,500 psi
fy = 60,000 psi (Reinforcement)
fy = 50,000 psi (M270 Grade 50)

FIELD UNITS (Existing)
fc = 1,400 psi (Flexure, Except Stressed by Earth)
fs = 20,000 psi (Reinforcement)
fc = 800 psi (Flexure Stressed by Earth)
fc = 75 psi (Ftgs.)

SEISMIC DATA

(New Construction)
Seismic Performance Zone (SPZ) = 1
Design Spectral Acceleration at 1.0 sec. (S_{D1}) = 0.090g
Design Spectral Acceleration at 0.2 sec. (S_{DS}) = 0.153g
Soil Site Class = D

(Existing Pier 9)
Seismic Performance Category (SPC) = A
Bedrock Acceleration Coefficient (A) = 0.037g
Site Coefficient (S) = 1.0

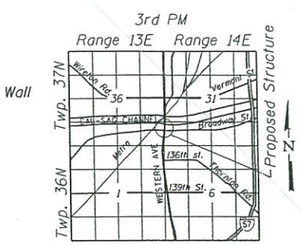

LOCATION SKETCH

GENERAL PLAN
WESTERN AVE. SOUTH APPROACH
OVER CAL-SAG CHANNEL
F.A.P. RTE 370 - SECTION 0103BR-1
COOK COUNTY
STATION 135+85.58
STRUCTURE NO. 016-0777

FILE NAME = W:\191-132.100T_Western_Ave\CADD Sheets\structural\TSL\South Approach\01_GeneralPlan.dgn

Bollinger, Lach & Associates, Inc.
ITASCA, ILLINOIS

USER NAME =	DESIGNED - JJI	REVISED	
	CHECKED - NS	REVISED	
PLOT SCALE =	DRAWN - GM	REVISED	
PLOT DATE = 11/13/2013	CHECKED - NS	REVISED	

STATE OF ILLINOIS
DEPARTMENT OF TRANSPORTATION

SHEET NO. 1 OF 3 SHEETS

F.A.P. RTE.	SECTION	COUNTY	TOTAL SHEETS	SHEET NO.
370	0103BR-1	Cook	3	1
		CONTRACT NO. 60K72		
		ILLINOIS FED. AID PROJECT		

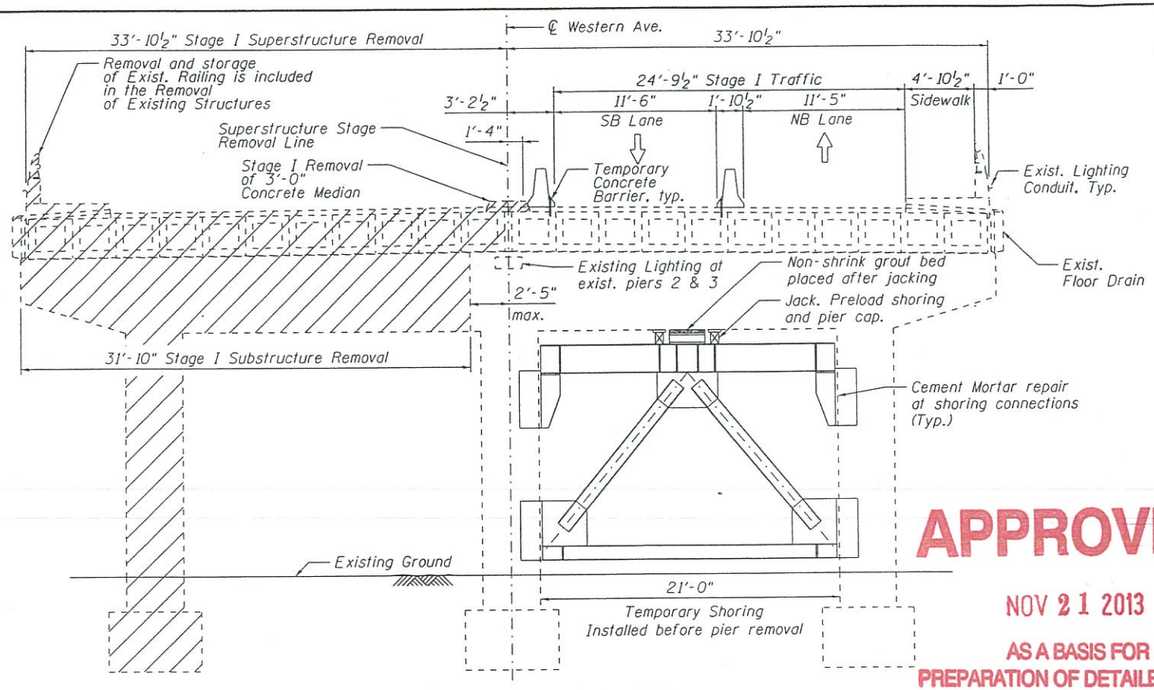

STAGE I SHORING & REMOVAL
(Looking North)
(Exist. Piers 2 thru 8)

APPROVED
NOV 21 2013
AS A BASIS FOR PREPARATION OF DETAILED PLANS

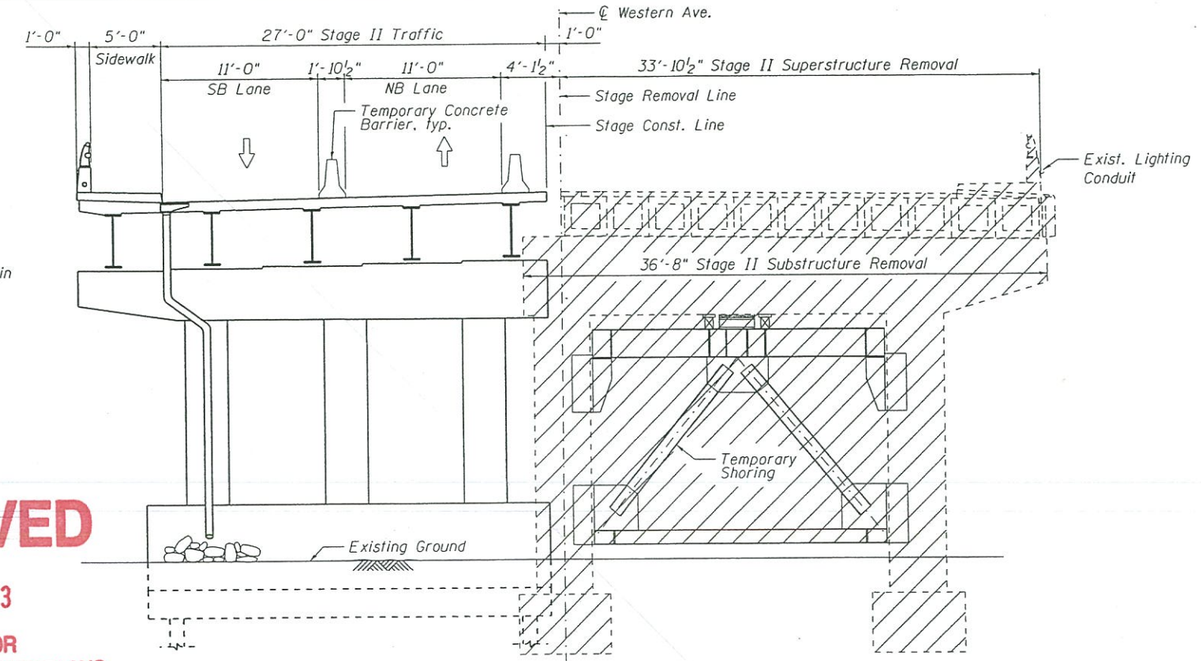

STAGE II REMOVAL
(Looking North)

LEGEND:
Removal of Existing structures

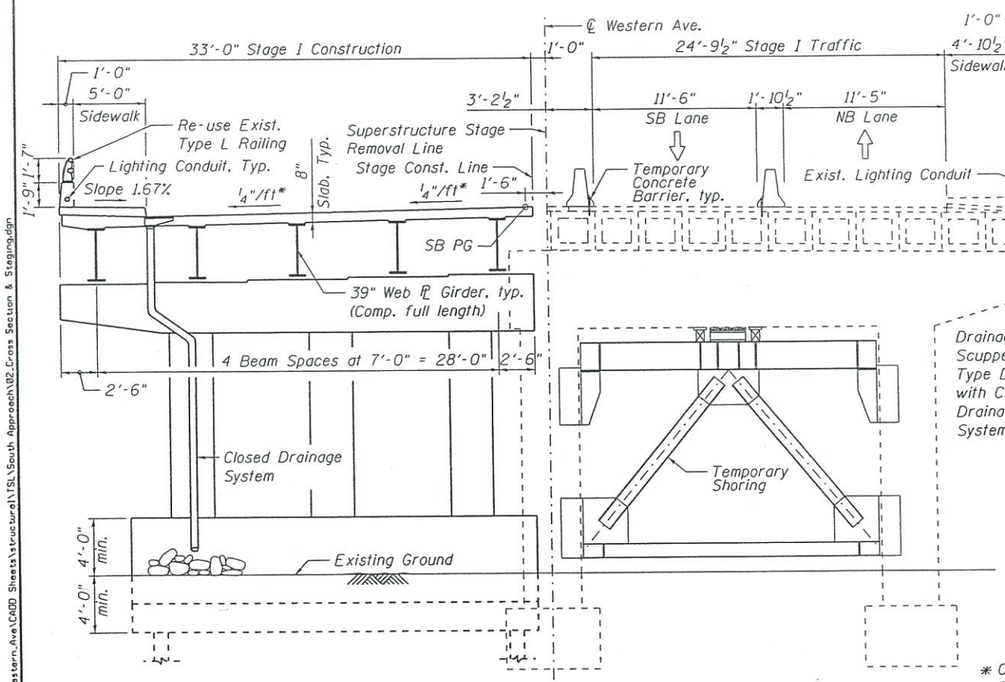

STAGE I CONSTUCTION
(Looking North)
(Location of Proposed Piers are not in the same location as Existing Piers)

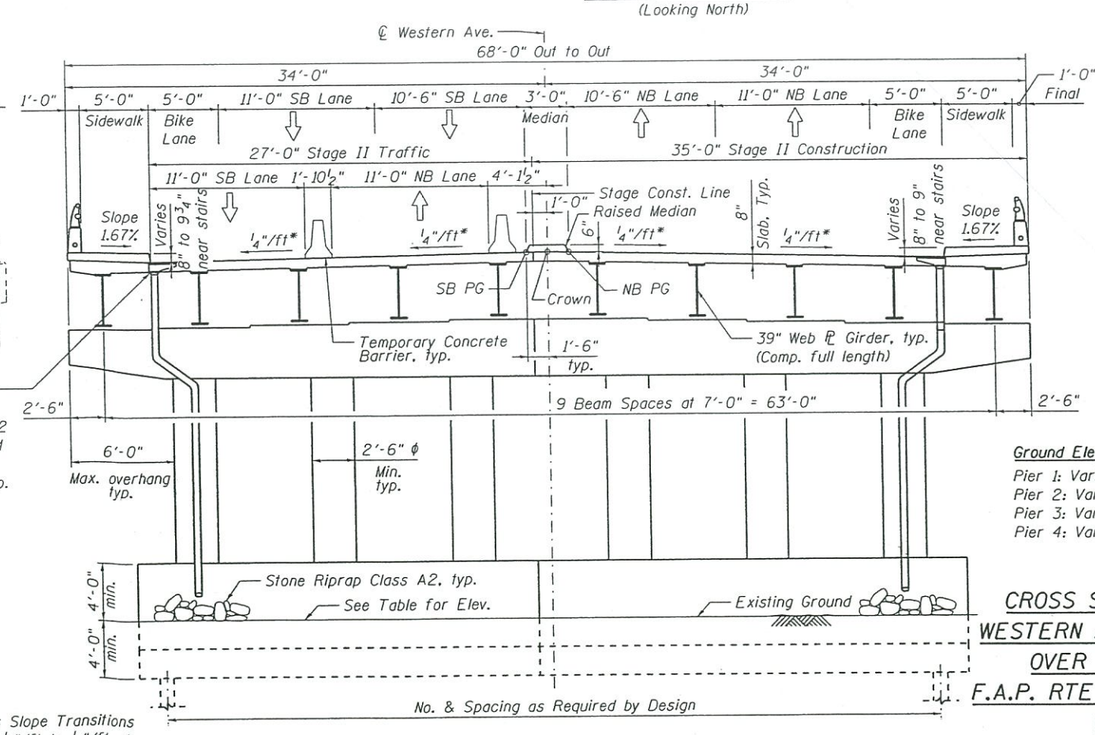

STAGE II CONSTUCTION & FINAL
(Looking North)

Note:
Existing south abutment pile cap to remain for stair support.

Ground Elev. for Proposed Piers 1-4
Pier 1: Varies 596.3 (W) to 595.5 (E)
Pier 2: Varies 596.3 (W) to 595.5 (E)
Pier 3: Varies 594.1 (W) to 594.4 (E)
Pier 4: Varies 593.0 (W) to 592.4 (E)

* Cross Slope Transitions from ¼"/ft to ⅛"/ft at North end of Bridge See Plan on Sht. 1 of 3 for Stations.

CROSS SECTIONS & STAGING
WESTERN AVE. SOUTH APPROACH OVER CAL-SAG CHANNEL
F.A.P. RTE 370-SECTION 0103BR-1
COOK COUNTY
STATION 135+85.58
STRUCTURE NO. 016-0777

FILE NAME = W:\191-132_IDOT_Western_Ave\CADD Sheets\structure01\TSL\South Approach\02_Cross Section & Stagingdgn

Bollinger, Lach & Associates, Inc.
ITASCA, ILLINOIS

USER NAME =	DESIGNED - JJJ	REVISED	
	CHECKED - NS	REVISED	
PLOT SCALE =	DRAWN - GM	REVISED	
PLOT DATE = 11/13/2013	CHECKED - NS	REVISED	

STATE OF ILLINOIS
DEPARTMENT OF TRANSPORTATION

SHEET NO. 2 OF 3 SHEETS

F.A.P. RTE.	SECTION	COUNTY	TOTAL SHEETS	SHEET NO.
370	0103BR-1	Cook	3	2
		CONTRACT NO. 60K72		
		ILLINOIS FED. AID PROJECT		

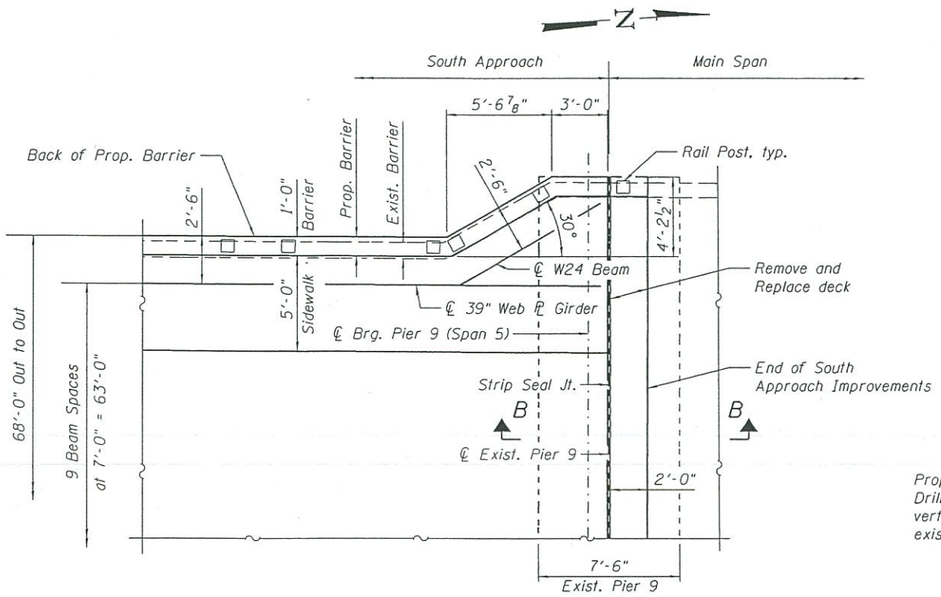

TRANSITION PLAN WITH
PARTIAL FRAMING PLAN
(West Side Shown, East side similar)

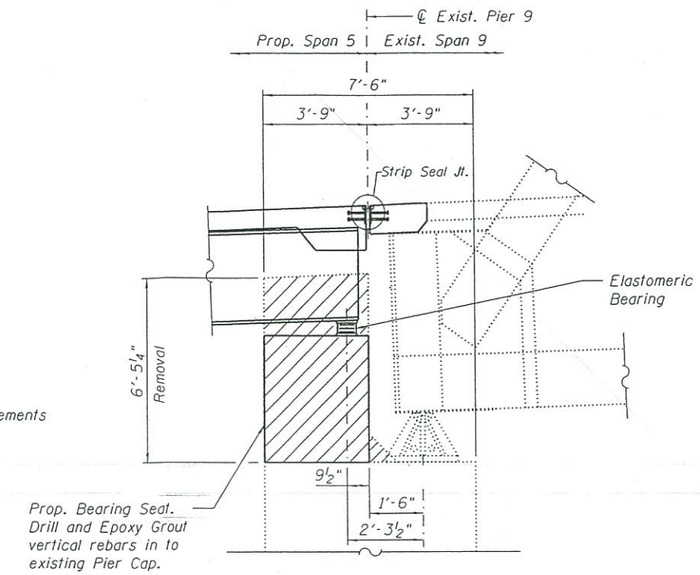

PIER 9 MODIFICATIONS
SECTION B-B

* Remaining portion of Existing Pier 9
cap will have Structural Repair of Concrete

APPROVED
NOV 21 2013
AS A BASIS FOR
PREPARATION OF DETAILED PLANS

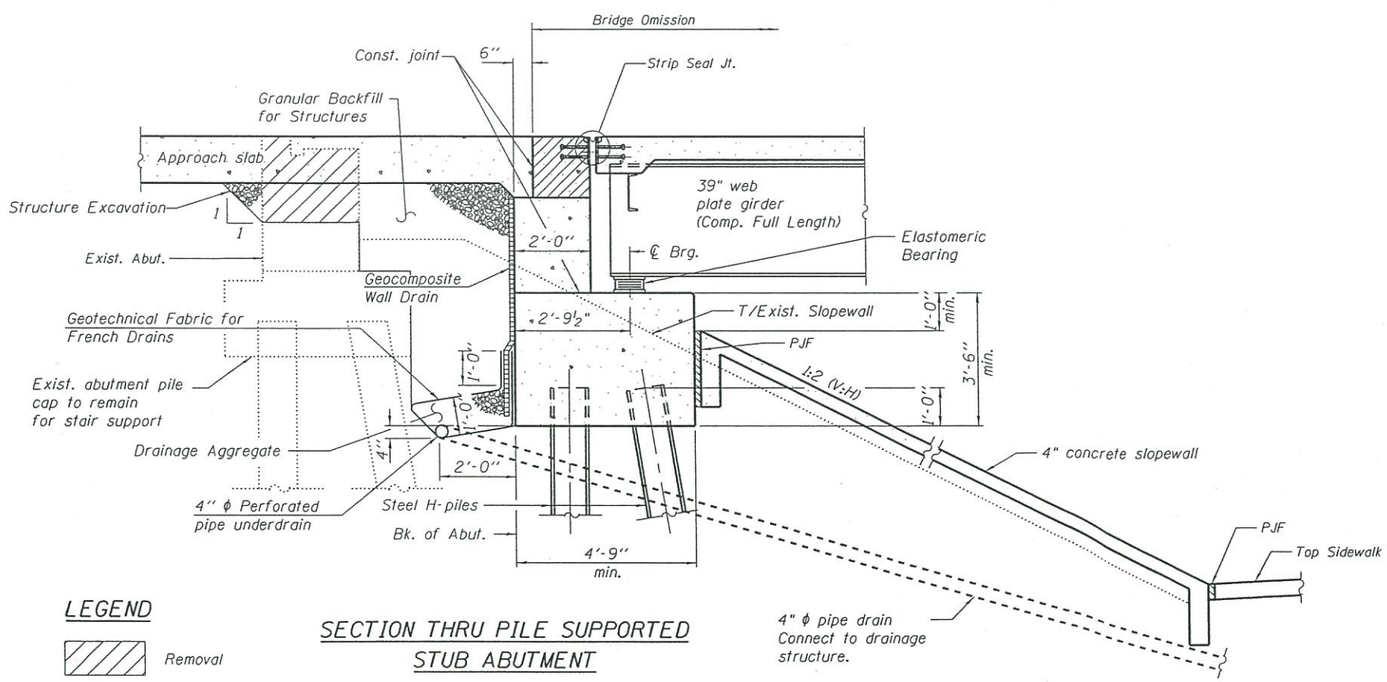

LEGEND

Removal

SECTION THRU PILE SUPPORTED
STUB ABUTMENT

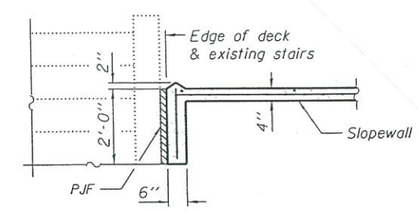

SECTION A-A

DETAILS
WESTERN AVE. SOUTH APPROACH
OVER CAL-SAG CHANNEL
F.A.P. RTE 370 - SECTION 0103BR-1
COOK COUNTY
STATION 135+85.58
STRUCTURE NO. 016-0777

FILE NAME = W:\191-132_IDOT_Western_Ave\CADD Sheets\structural\TSL\South Approach\03_Detail.dgn

Bollinger, Lach & Associates, Inc. ITASCA, ILLINOIS	USER NAME =	DESIGNED - JJI	REVISED	STATE OF ILLINOIS DEPARTMENT OF TRANSPORTATION		F.A.P. RTE.	SECTION	COUNTY	TOTAL SHEETS	SHEET NO.
		CHECKED - NS	REVISED			370	0103BR-1	Cook	3	3
	PLOT SCALE =	DRAWN - GM	REVISED					CONTRACT NO. 60K72		
	PLOT DATE = 11/13/2013	CHECKED - NS	REVISED		SHEET NO. 3 OF 3 SHEETS			ILLINOIS FED. AID PROJECT		