Bench Mark: Chiseled "X" on traffic signal handhole at Sta. 170+83.92, 39.46' Rt.
Elevation 597.92

Existing Structure: S.N. 016-0936, originally built in 1923 as FAU 2937, Section 1212.1-B-R(82). In 1962, the structure was widened to the east with simple span PPC deck beams. In 1984, the original T-beams on the west side were replaced with PPC deck beams. The existing structure consists of 3 spans on pile supported closed abutments and pile supported solid wall piers. The structure is 158'-10" back to back of abutments and 67'-0" out to out of deck. The structure is to be completely removed and replaced. Traffic is to be maintained utilizing staged construction.

No salvage

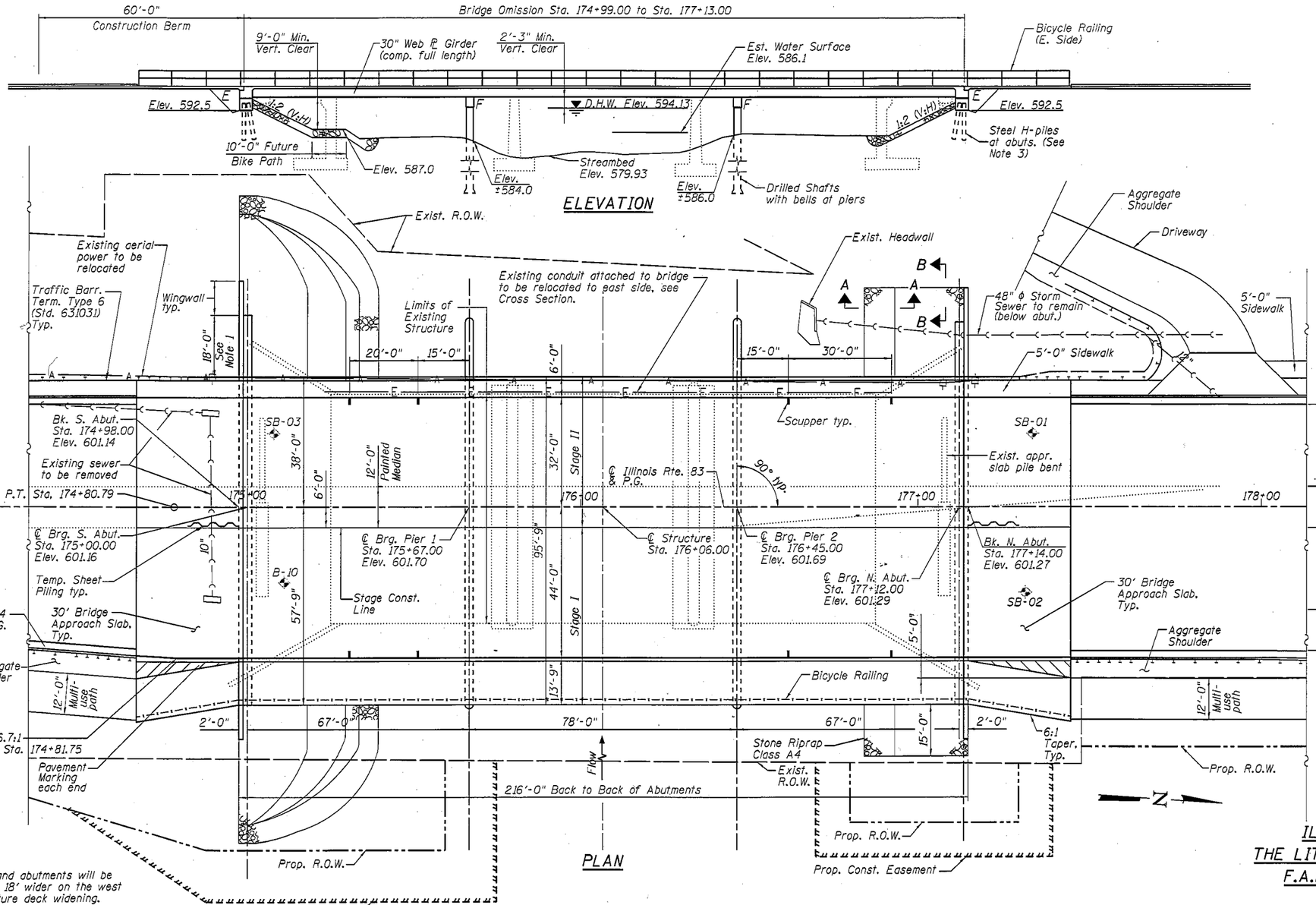

Notes:

1. The piers and abutments will be constructed 18' wider on the west side for future deck widening.
2. For Sections A-A and B-B, see Sheet 3 of 3.
3. H-piles at N. Abut. spaced to miss 48"ϕ Sewer.

DESIGN SPECIFICATIONS

2012 AASHTO LRFD Bridge Design Specifications, 6th Edition.

DESIGN STRESSES

FIELD UNITS

f'c = 3,500 psi
fy = 60,000 psi (Reinforcement)
fy = 50,000 psi (M270 Grade 50W)

HIGHWAY CLASSIFICATION

F.A.P. Rte 358 - IL Rte. 83
Functional Class: Other Principal Arterial
ADT: 27,200 (2009); 30,000 (2030)
ADTT: 2342 (2009); 2583 (2030)
DHV: 3000 (2030)
Design Speed: 45 m.p.h.
Posted Speed: 40 m.p.h.
Two-Way Traffic
Directional Distribution: 50:50

SEISMIC DATA

Seismic Performance Zone (SPZ) = 1
Design Spectral Acceleration at 1.0 sec. (S_{D1}) = 0.091g
Design Spectral Acceleration at 0.2 sec. (S_{DS}) = 0.146g
Soil Site Class = D

LOADING HL-93

Allow 50#/sq. ft. for future wearing surface.

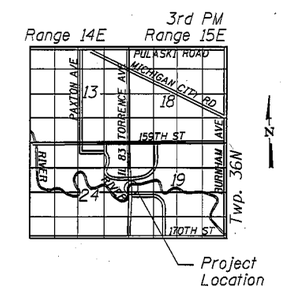

LOCATION SKETCH

APPROVED
DEC 28 2012
AS A BASIS FOR PREPARATION OF DETAILED PLANS

GENERAL PLAN
IL ROUTE 83 (U.S. ROUTE 6) OVER
THE LITTLE CALUMET RIVER (PUBLIC WATER)
F.A.P. ROUTE 358 - SECTION 0909.1-B
COOK COUNTY
STATION 176+06.00
STRUCTURE NO. 016-1302

GRAEF
8501 W. Higgins Road; Suite 280
Chicago, Illinois 60631; (773) 399-0112

USER NAME =	DESIGNED - J.A.Z. 12/27/2012	REVISED -	
	CHECKED - S.D.H. 12/27/2012	REVISED -	
PLOT SCALE =	DRAWN - S.R.K. 12/27/2012	REVISED -	
PLOT DATE =	CHECKED - J.A.Z. 12/27/2012	REVISED -	

STATE OF ILLINOIS
DEPARTMENT OF TRANSPORTATION

SHEET NO. 1 OF 3 SHEETS

F.A.P. RTE.	SECTION	COUNTY	TOTAL SHEETS	SHEET NO.
358	0909.1-B	COOK	3	1
		CONTRACT NO. 60K78		
		ILLINOIS FED. AID PROJECT		

I:\Jobs2012\2012302\CAD\Structural\dgn\00\D160K78-TSL-Sheet 1.dgn
12/27/2012 11:59:31 PM

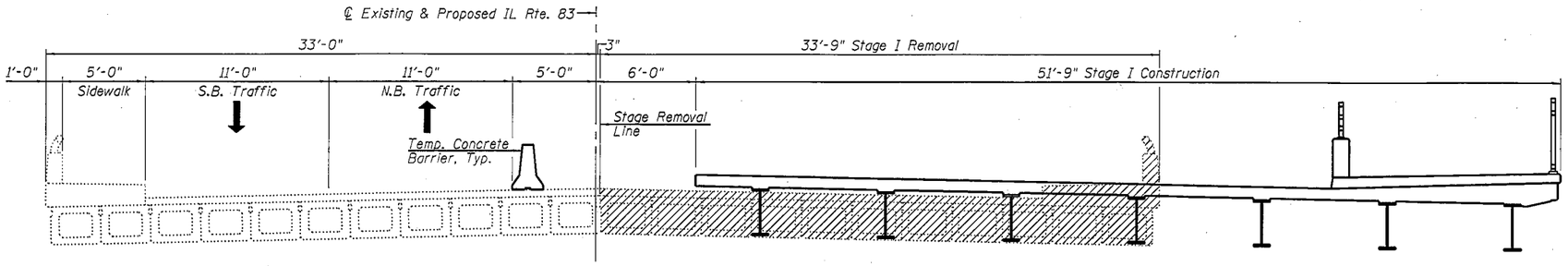

STAGE I REMOVAL & CONSTRUCTION

(Looking North)

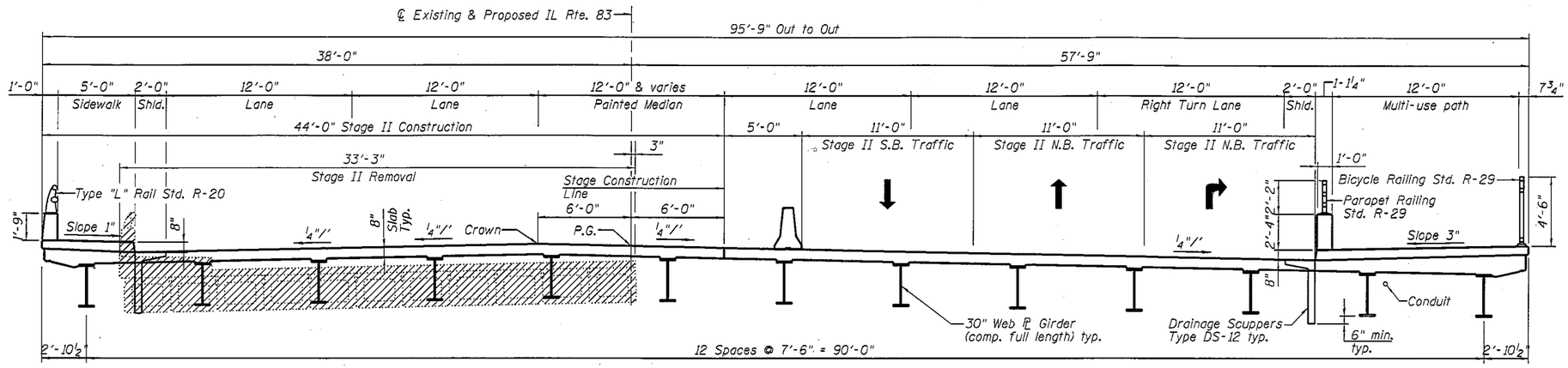

CROSS SECTION & STAGE II CONSTRUCTION

(Looking North)

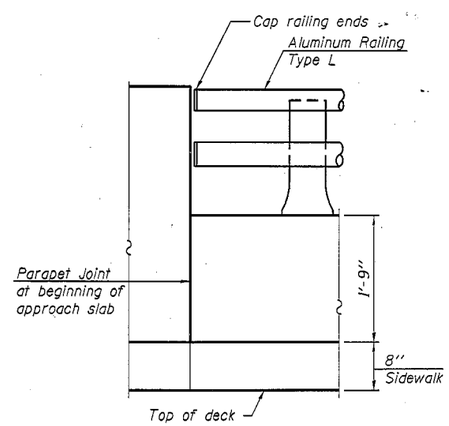

TYPE "L" RAIL END TREATMENT FOR TYPE 6 TERMINAL

CROSS SECTION & STAGING
IL ROUTE 83 (U.S. ROUTE 6) OVER
THE LITTLE CALUMET RIVER (PUBLIC WATER)
F.A.P. ROUTE 358 - SECTION 0909.1-B
COOK COUNTY
STATION 176+06.00
STRUCTURE NO. 016-1302

H:\Jobs2012\20123002\CAD\Structural\dgn\00\D160K78-Staging-Sheet 2.dgn
12/21/2012 12:20:25 PM

GRÄEF
8501 W. Higgins Road, Suite 280
Chicago, Illinois 60631: (773) 399-0112

USER NAME =	DESIGNED - J.A.Z. 12/27/2012	REVISED -	
	CHECKED - S.D.H. 12/27/2012	REVISED -	
PLOT SCALE =	DRAWN - S.R.K. 12/27/2012	REVISED -	
PLOT DATE =	CHECKED - J.A.Z. 12/27/2012	REVISED -	

STATE OF ILLINOIS
DEPARTMENT OF TRANSPORTATION

SHEET NO. 2 OF 3 SHEETS

F.A.P. RTE.	SECTION	COUNTY	TOTAL SHEETS	SHEET NO.
358	0909.1-B	COOK	3	2
		CONTRACT NO. 60K78		
		ILLINOIS FED. AID PROJECT		

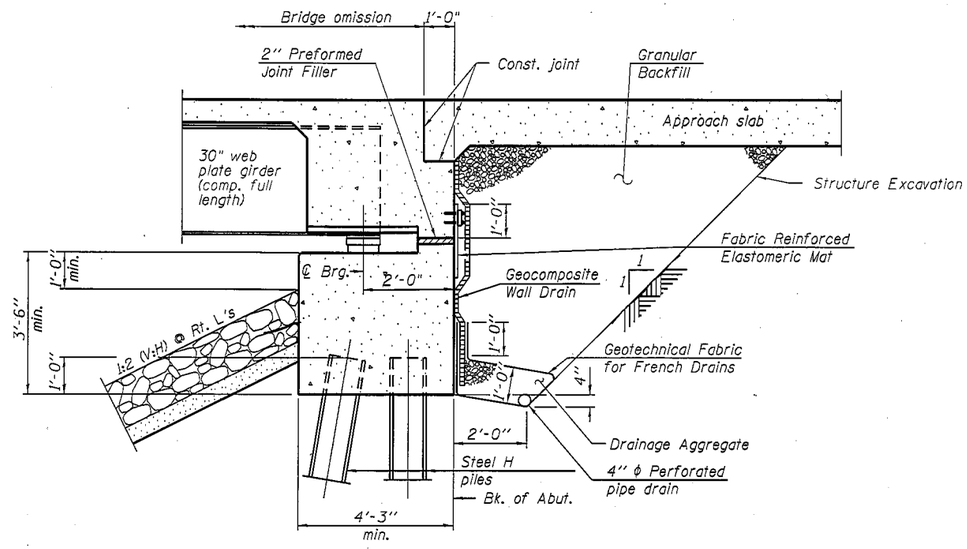

SECTION THRU SEMI-INTEGRAL ABUTMENT

(Horiz. dim. @ Rt. L's)

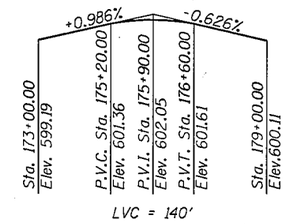

PROFILE GRADE

(along ℄ IL 83)

CURVE DATA

P.I. Sta. = 171+36.73
Δ = 6° 07' 35"
D = 0° 53' 22"
R = 6,441.63'
T = 344.72'
L = 688.78'
E = 9.22'
e = 0.0
P.C. Sta. = 167+92.01
P.T. Sta. = 174+80.79

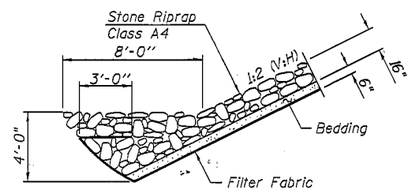

SECTION A-A

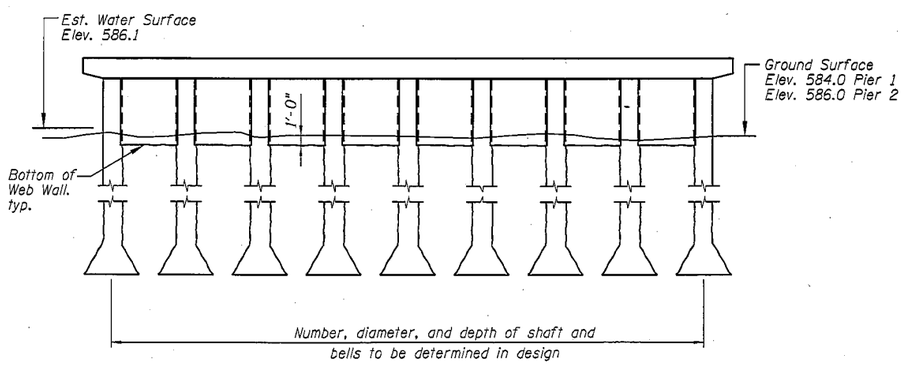

PIER SKETCH

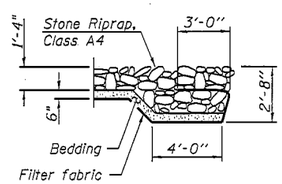

SECTION B-B

WATERWAY INFORMATION

Drainage Area = 96.1 Sq. Mi.
Exist. Low Grade Elev.= 598.36 FT. @ sta. 170+50
Prop. Low Grade Elev.= 598.36 FT. @ sta. 170+50

Flood	Freq. Yr.	Q C.F.S.	Opening Sq. Ft. Exist.	Opening Sq. Ft. Prop.	Nat. H.W.E.	Head - Ft. Exist.	Head - Ft. Prop.	Headwater El. Exist.	Headwater El. Prop.
	10	1050	1351	1507	592.83	0.02	0.01	592.85	592.84
Design	50	1370	1546	1756	594.13	0.02	0.01	594.15	594.14
Base	100	1390	1726	1980	595.29	0.01	0.01	595.30	595.30
Overtopping	>500								
Max. Calc.	500	1910	2098	2336	597.77	0.02	0.02	597.79	597.79

Design Scour Elevations (ft.)

	W. Abut.	Pier 1	Pier 2	E. Abut.
100 Yr.	592.5	582.0	583.0	592.5
500 Yr.	592.5	581.5	582.5	592.5

DETAILS
IL ROUTE 83 (U.S. ROUTE 6) OVER THE LITTLE CALUMET RIVER (PUBLIC WATER)
F.A.P. ROUTE 358 - SECTION 0909.1-B
COOK COUNTY
STATION 176+06.00
STRUCTURE NO. 016-1302

GRÄEF
8501 W. Higgins Road; Suite 280
Chicago, Illinois 60631; (773) 399-0112

USER NAME =	DESIGNED - J.A.Z. 12/27/2012	REVISED -	
	CHECKED - S.D.H. 12/27/2012	REVISED -	
PLOT SCALE =	DRAWN - S.R.K. 12/27/2012	REVISED -	
PLOT DATE =	CHECKED - J.A.Z. 12/27/2012	REVISED -	

STATE OF ILLINOIS
DEPARTMENT OF TRANSPORTATION

SHEET NO. 3 OF 3 SHEETS

F.A.P. RTE.	SECTION	COUNTY	TOTAL SHEETS	SHEET NO.
358	0909.1-B	COOK	3	3
		CONTRACT NO. 60K78		
		ILLINOIS FED. AID PROJECT		

H:\Jobs2002\2002300\2\CAD\Structural\dgn\00\D160K78-TSL-Sheet 3.dgn
12/27/2012 1:24:43 PM