Bench Mark: Cut square at center of door entrance to 707 W. Harrison St; South side of Harrison St. ±90' west of west line of Des Plaines. Elevation 597.47.
A X cut in the SE anchor bolt at the 11th street light N. of Roosevelt on the W. side of Halsted. Elev. = 594.06

Existing Structure: S.N. 016-2451 was originally built in 1960 under section 0101.6-IP and F.A.I. Route Number 94 carries NB I-90/94 traffic to EB I-290. The existing three (3) span structure has an overall length of approx. 180'-0" and out to out width of 29'-0". The existing superstructure consists of simple span wide flange beams with 7½" thick concrete deck with 2" overlay. The existing substructure consists of reinforced concrete abutment and multi-columns piers. Existing substructure units are supported on caissons. The existing structure is to be removed and replaced.

Traffic Control: Ramp NE and Ramp EN will be closed during construction and traffic will be detoured via local roads.

No Salvage.

Notes:
1. All structural steel shall be metalized (thermal spraying).
2. Span lengths are measured along ℄ & PGL Ramp NE.
3. All piers are oriented perpendicular to ℄ & PGL unless noted otherwise.
4. For other Highway Classifications, see sheet 3.

HIGHWAY CLASSIFICATION

Ramp NE
Functional Class: Interstate
ADT: 3,100 (2012); 4,000 (2040)
ADTT: 42 (2012); 55 (2040)
DHV: 280 (2040)
Design Speed: 30 m.p.h.
Posted Speed: 30 m.p.h.
One-Way Traffic
Directional Distribution: NA

DESIGN SPECIFICATIONS

2014 AASHTO LRFD Bridge Design Specifications
7th Edition

LOADING HL-93

Allow 50#/sq. ft. for future wearing surface.

DESIGN STRESSES

FIELD UNITS

f'c = 3,500 psi
fy = 60,000 psi (Reinforcement)
fy = 50,000 psi (M270 Grade 50)

SEISMIC DATA

Seismic Performance Zone (SPZ) = 1
Design Spectral Acceleration at 1.0 sec. (S_{D1}) = 0.085g
Design Spectral Acceleration at 0.2 sec. (S_{DS}) = 0.144g
Soil Site Class = D

SCUPPER LOCATION

Station	Offset
1704+13.94	6.0 Rt.
1705+82.94	6.0 Rt.
1707+14.54	6.0 Rt.
1707+27.34	6.0 Rt.
1707+40.14	6.0 Rt.

* Vert. Cl. to the bottom of pier cap
** For cross slope, see curve data on sheet 3.

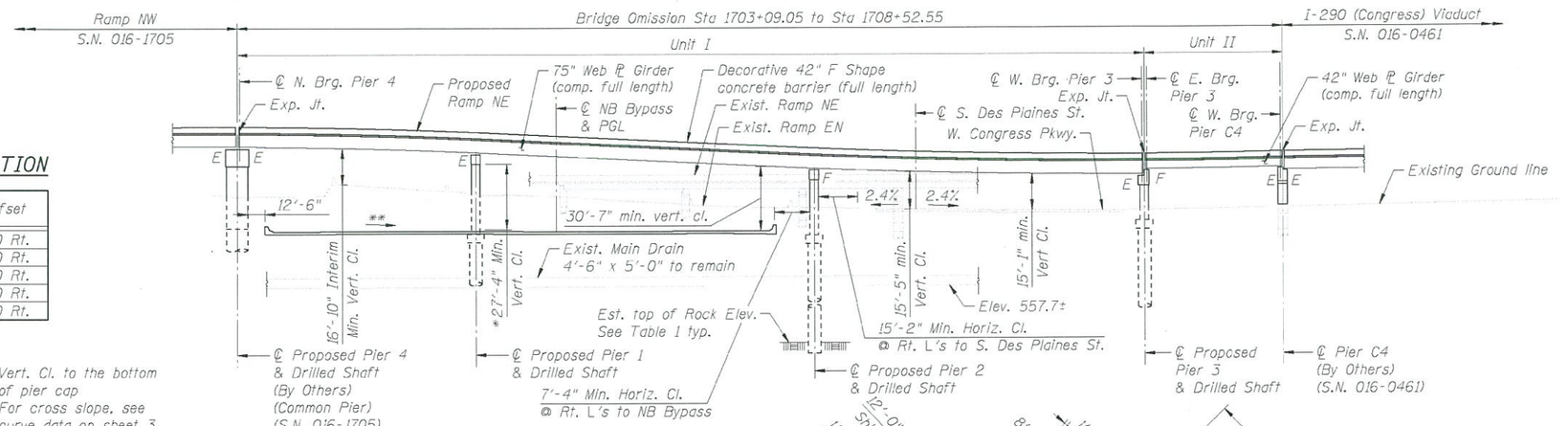

ELEVATION

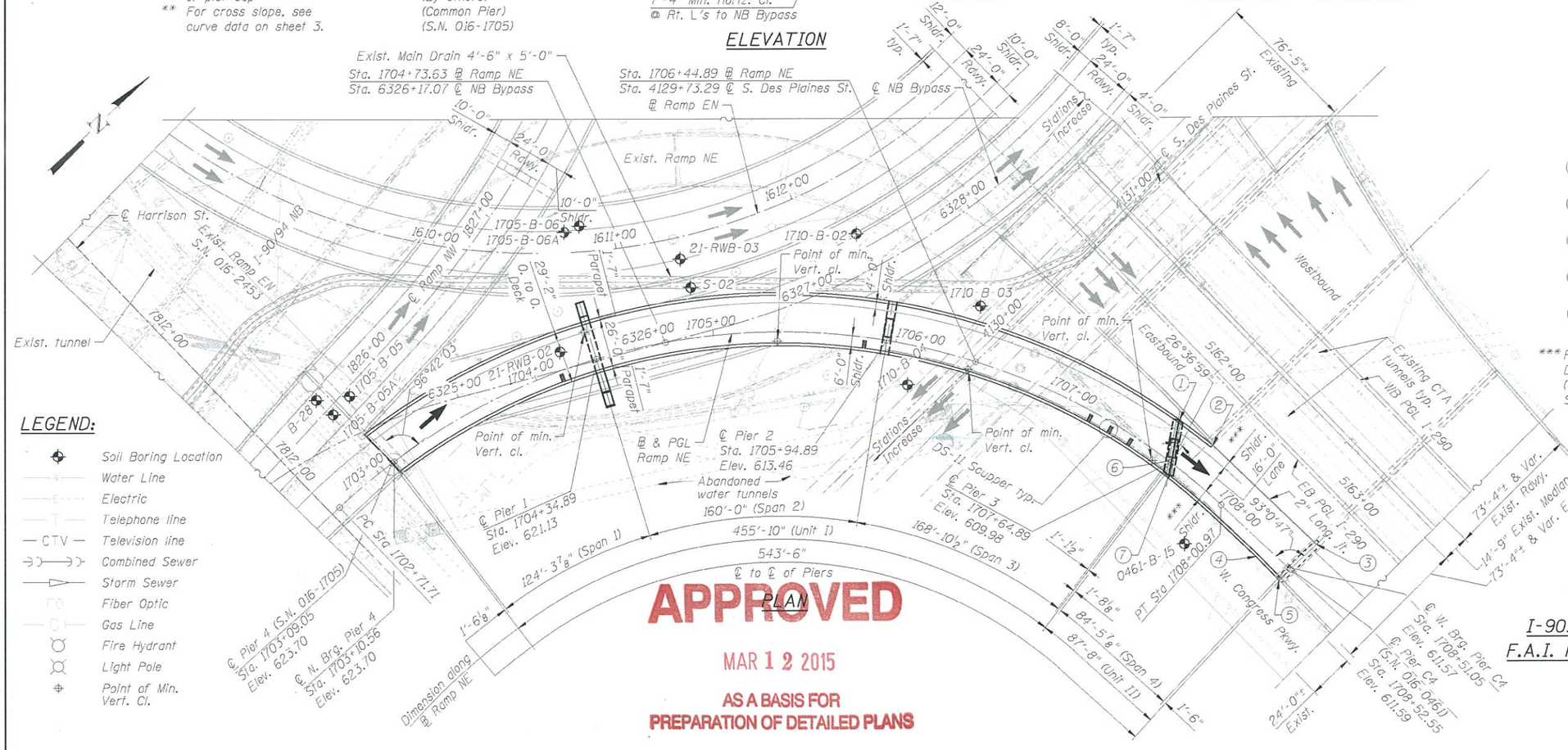

TABLE 1

Pier	Estimated T/Ground Elev.	Estimated T/Rock Elev.
1 W. Col.	594.55	490.0
1 E. Col.	597.16	490.0
2	588.35	485.5
3	587.55	488.9

1. Sta. 1707+55.51 Offset 21.58' Lt.
2. Sta. 1707+76.96 Offset 21.58' Lt.
3. Sta. 1708+53.59 Offset 19.69' Lt.
4. Sta. 1708+34.21 Offset 7.58' Rt.
5. Sta. 1708+52.10 Offset 8.52' Rt.
6. ℄ W. Brg. Pier 3 Sta. 1707+63.77 Elev. 609.96
7. ℄ E. Brg. Pier 3 Sta. 1707+66.57 Elev. 610.01

*** For Out to Out Deck and Shoulder (Unit II), see Cross Section on sheet 2.

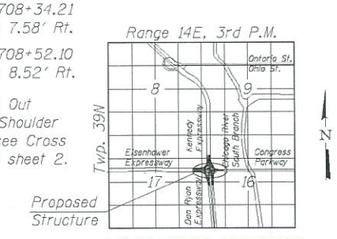

LOCATION SKETCH

LEGEND:

- Soil Boring Location
- Water Line
- Electric
- Telephone line
- Television line
- Combined Sewer
- Storm Sewer
- Fiber Optic
- Gas Line
- Fire Hydrant
- Light Pole
- Point of Min. Vert. Cl.

APPROVED
MAR 12 2015
AS A BASIS FOR PREPARATION OF DETAILED PLANS

GENERAL PLAN AND ELEVATION
RAMP NE OVER
I-90/94 NB BYPASS/S. DES PLAINES ST.
F.A.I. RTE. I-90/94 - SECTION 2014-005R&B
COOK COUNTY
STATION 1704+73.63
STRUCTURE NO. 016-1710

T:\16898A\Struct\Cadd\TS&L\016-1710\016-1710-CIRCLE100-SHT-PB-ST-TSL-001.dgn
23-FEB-2015 14:29

PARSONS BRINCKERHOFF	FILE NAME = USER	DESIGNED - LFC	REVISED -	STATE OF ILLINOIS DEPARTMENT OF TRANSPORTATION	STRUCTURE NO. 016-1710
		CHECKED - MS	REVISED -		
	PLOT SCALE = NONE	DRAWN - DCP	REVISED -		
	PLOT DATE = 2/23/2015	CHECKED - JIG	REVISED -		SHEET NO. 1 OF 3 SHEETS

F.A.I. RTE.	SECTION	COUNTY	TOTAL SHEETS	SHEET NO.
90/94/290	2014-005R&B	COOK	3	1
		CONTRACT NO. 60X79		
		ILLINOIS FED. AID PROJECT		

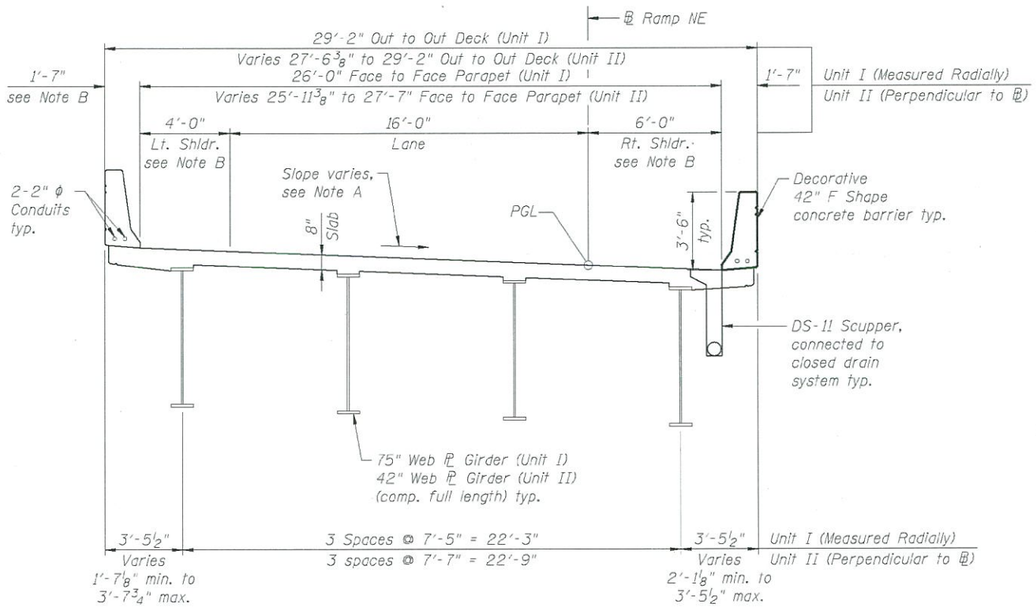

CROSS SECTION

(Looking upstation Units I & II)

Note A: (Direction of slope referenced from left edge of pavement)
Transition (-5.06% to -5.60%) Sta. 1703+03.93 to Sta. 1703+16.96
Full S.E. (-5.60%) Sta. 1703+16.96 to Sta. 1707+55.72
Transition (-5.60% to -2.00%) Sta. 1707+55.72 to Sta. 1708+42.72
Cross Slope (-2.00%) Sta. 1708+42.72 to Sta. 1708+52.55.

Note B: Lt. Parapet ends at Sta. 1707+76.96 where a 2" long. jt. begins.
Lt. Shoulder increases from 4'-0" to 5'-7" at the beginning of long. jt. then decreases to 3'-8 1/4" at Sta. 1708+53.59.
Rt. Shoulder increases from 6'-0" at Sta. 1708+34.21 to 6'-11 1/4" at Sta. 1708+52.10.

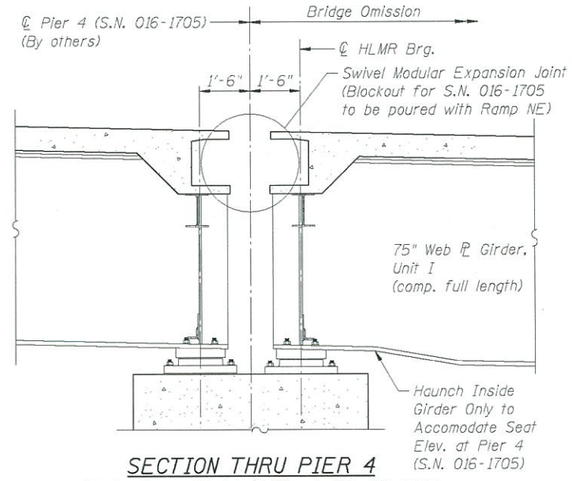

SECTION THRU PIER 4

(Horiz. dim. @ Rt. L's ℄ Pier 4, S.N. 016-1705)

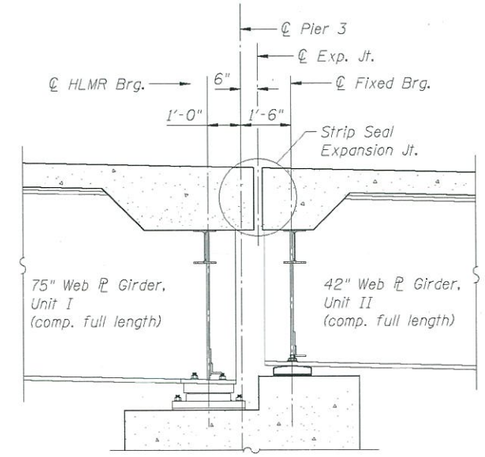

SECTION THRU PIER 3

(Horiz. dim. @ Rt. L's)

APPROVED

MAR 12 2015

AS A BASIS FOR PREPARATION OF DETAILED PLANS

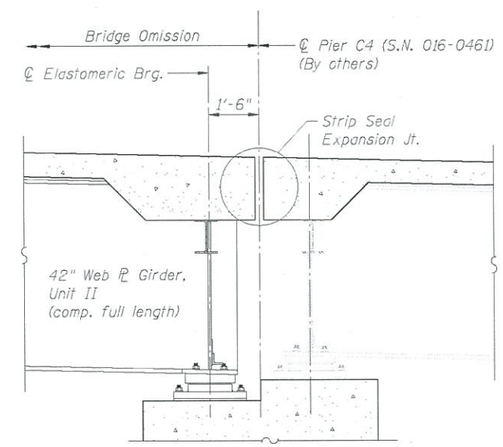

SECTION THRU PIER C4

(Horiz. dim. @ Rt. L's ℄ Pier C4, S.N. 016-0461)

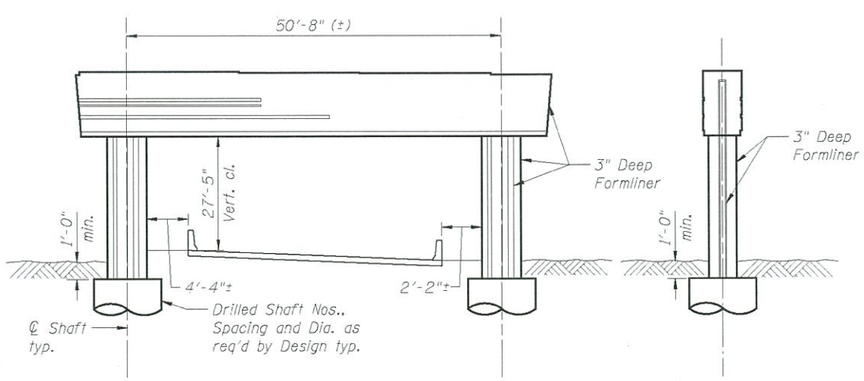

PIER 1 SKETCH

(Looking Upstation)

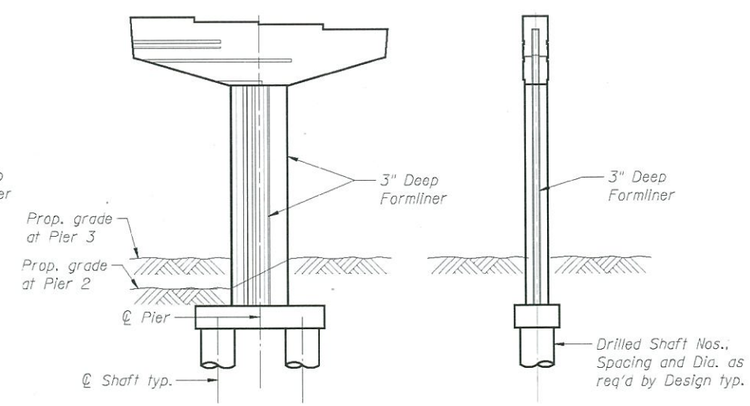

PIER 2 AND 3 SKETCH

(Looking Upstation)

DETAILS
RAMP NE OVER
I-90/94 NB BYPASS/S. DES PLAINES ST.
F.A.I. RTE. I-90/94 - SECTION 2014-005R&B
COOK COUNTY
STATION 1704+73.63
STRUCTURE NO. 016-1710

T:\16898A\Struct\Cadd\TS&L\016-1710\016-1710-CIRCLE100-SHT-PB-ST-TSL-002.dgn
23-FEB-2015 14:29

PARSONS BRINCKERHOFF	FILE NAME = USER	DESIGNED - LFC	REVISED -	STATE OF ILLINOIS DEPARTMENT OF TRANSPORTATION	STRUCTURE NO. 016-1710	F.A.I. RTE.	SECTION	COUNTY	TOTAL SHEETS / SHEET NO.
		CHECKED - MS	REVISED -			90/94/290	2014-005R&B	COOK	3 / 2
	PLOT SCALE = NONE	DRAWN - DCP	REVISED -					CONTRACT NO. 60X79	
	PLOT DATE = 2/23/2015	CHECKED - JIG	REVISED -		SHEET NO. 2 OF 3 SHEETS		ILLINOIS	FED. AID PROJECT	

CURVE DATA
(Ramp NE)

PROP. CURVE P-CIR-NE-1
P.I. Sta. = 1706+01.77
Δ = 86° 38′ 23″ (Rt.)
D = 16° 22′ 13″
R = 350.00′
T = 330.05′
L = 529.25′
E = 131.08′
e = 5.60%
T.R. = 48′
S.E. Run = 136′
P.C. Sta. = 1702+71.71
P.T. Sta. = 1708+00.97
DS = 30
PS = 30

CURVE DATA
(NB Bypass)

PROP. CURVE P-NCD-NX-2
PI STA. = 6323+25.02
Δ = 8° 04′ 05″ (RT)
D = 7° 17′ 22″
R = 786.00′
T = 55.43′
L = 110.68′
E = 1.95′
e = 5.20%
T.R. = NA
S.E. RUN = 101′
P.C. STA. = 6322+69.59
P.T. STA. = 6323+80.27
DS = 35
PS = 30

CURVE DATA
(NB Bypass)

PROP. CURVE P-NCD-NX-3
PI STA. = 6324+41.27
Δ = 20° 56′ 44″ (RT)
D = 17° 21′ 44″
R = 330.00′
T = 61.00′
L = 120.64′
E = 5.59′
e = 5.20%
T.R. = NA
S.E. RUN = 95′
P.C. STA. = 6323+80.27
P.T. STA. = 6325+00.91
DS = 30
PS = 30

CURVE DATA
(NB Bypass)

PROP. CURVE P-NCD-NX-4
PI STA. = 6328+76.78
Δ = 59° 05′ 41″ (LT)
D = 14° 08′ 50″
R = 405.00′
T = 229.58′
L = 417.72′
E = 60.54′
e = 5.40%
T.R. = 36′
S.E. RUN = 98′
P.C. STA. = 6326+47.20
P.T. STA. = 6330+64.91
DS = 30
PS = 30

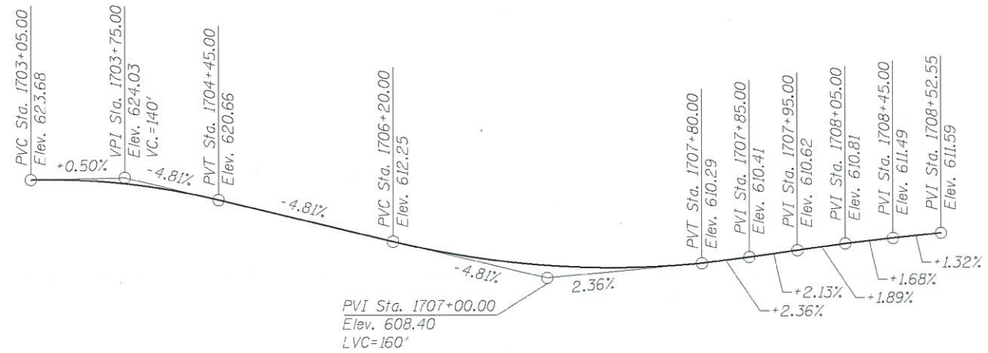

PROFILE GRADE
(Along ℄ Ramp NE)

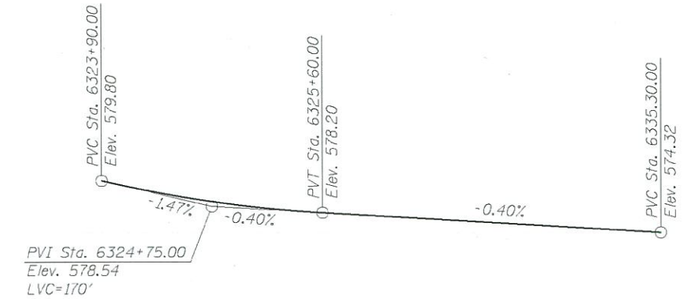

PROFILE GRADE
(Along ℄ NB Bypass)

EXISTING PROFILE GRADE
(Along ℄ S. Des Plaines St.)

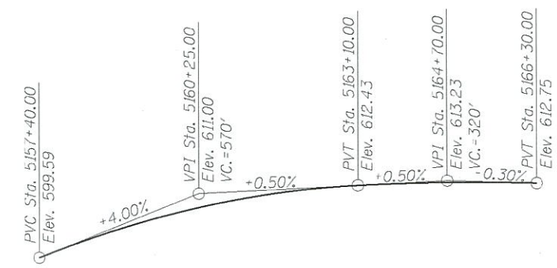

PROFILE GRADE
(Along ℄ EB I-290 (Congress))

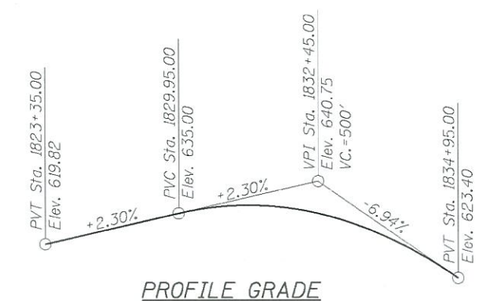

PROFILE GRADE
(Along ℄ Ramp NW)

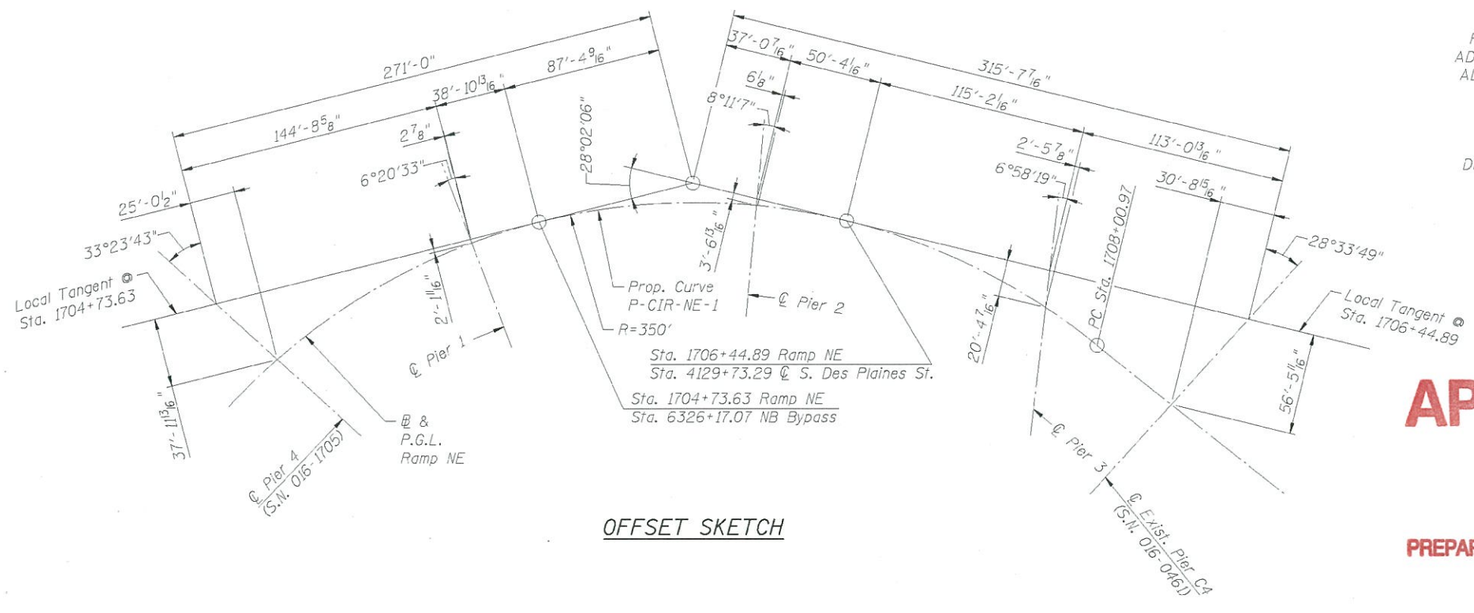

OFFSET SKETCH

HIGHWAY CLASSIFICATION

NB Bypass
Functional Class: Interstate
ADT: NA (2012); 17,000 (2040)
ADTT: NA (2012); 387 (2040)
DHV: 1,680 (2040)
Design Speed: 30 m.p.h.
Posted Speed: NA
One-Way Traffic
Directional Distribution: 100:0

Ramp EN
Functional Class: Interstate
ADT: 26,600 (2012); 31,000 (2040)
ADTT: 1,032 (2012); 1,203 (2040)
DHV: 1,910 (2040)
Design Speed: 30 m.p.h.
Posted Speed: 30 m.p.h.
One-Way Traffic
Directional Distribution: 100:0

Ramp NW
Functional Class: Interstate
ADT: 32,500 (2012); 36,000 (2040)
ADTT: 2,483 (2012); 2,750 (2040)
DHV: 2,790 (2040)
Design Speed: 35 m.p.h.
Posted Speed: 35 m.p.h.
One-Way Traffic
Directional Distribution: 100:0

S. Des Plaines St.
Functional Class: Principal Arterial
ADT: 5,490 (2012); NA (2040)
ADTT: 220 (2012); NA (2040)
DHV: NA (2040)
Design Speed: 30 m.p.h.
Posted Speed: 30 m.p.h.
One-Way Traffic
Directional Distribution: 100:0

F.A.I. Rte. EB I-290 (Congress)
Functional Class: Interstate
ADT: 32,500 (2012); 33,000 (2040)
ADTT: 380 (2012); 386 (2040)
DHV: 2,610 (2040)
Design Speed: 50 m.p.h.
Posted Speed: 45 m.p.h.
One-Way Traffic
Directional Distribution: 100:0

APPROVED
MAR 12 2015
AS A BASIS FOR
PREPARATION OF DETAILED PLANS

PROFILES & CURVES DATA
RAMP NE OVER
I-90/94 NB BYPASS/S. DES PLAINES ST.
F.A.I. RTE. I-90/94 - SECTION 2014-005R&B
COOK COUNTY
STATION 1704+73.63
STRUCTURE NO. 016-1710

T:\116899A\Struct\Cadd\TS&L\016-1710\016-1710-CIRCLE100-SHT-PB-ST-TSL-003.dgn
23-FEB-2015 14:29

PARSONS BRINCKERHOFF	FILE NAME = USER	DESIGNED - LFC	REVISED -	STATE OF ILLINOIS DEPARTMENT OF TRANSPORTATION	STRUCTURE NO. 016-1710	F.A.I. RTE.	SECTION	COUNTY	TOTAL SHEETS / SHEET NO.
		CHECKED - MS	REVISED -			90/94/290	2014-005R&B	COOK	3 / 3
	PLOT SCALE = NONE	DRAWN - DCP	REVISED -					CONTRACT NO. 60X79	
	PLOT DATE = 2/23/2015	CHECKED - JIG	REVISED -		SHEET NO. 3 OF 3 SHEETS		ILLINOIS	FED. AID PROJECT	