Bench Mark: Cut "X" on NE Bolt of Taylor St. on SW corner of Roosevelt and Union St. Elev. 593.36

Existing Structure: S.N. 016-2534 was built in 1988 and carries traffic for Taylor St exit ramp from SB I-90/94. Exist. four span structure has an overall length of approx. 428'. The exist. superstructure consists of steel beams with 7½" thick concrete deck. The exist. substructure consists of reinforced concrete high wall abutment and piers supported on steel pile foundation. Existing structure to be removed.
Exist. Cast-In-Place Ret. Wall 8 was built under two separate contracts in 1986 & 1987. Total length of the wall is approx. 282'-9" with max. height of 23'-11". Exist. wall is supported on steel H-pile foundation. Steel sheet piling used during wall construction was cut-off at the top of wall footing elev.
Exist. Cast-In-Place Ret. Wall 11 was built in 1987. Total length of wall is approx. 296'-4" with max. height of 10'-6". Wall is supported on steel H-piles.

Traffic Control: SB Taylor St. Exit Ramp Structure and EB Taylor St. Exit Ramp will be closed and traffic will be detoured during construction. Traffic along SB I-90/94 will be maintained.

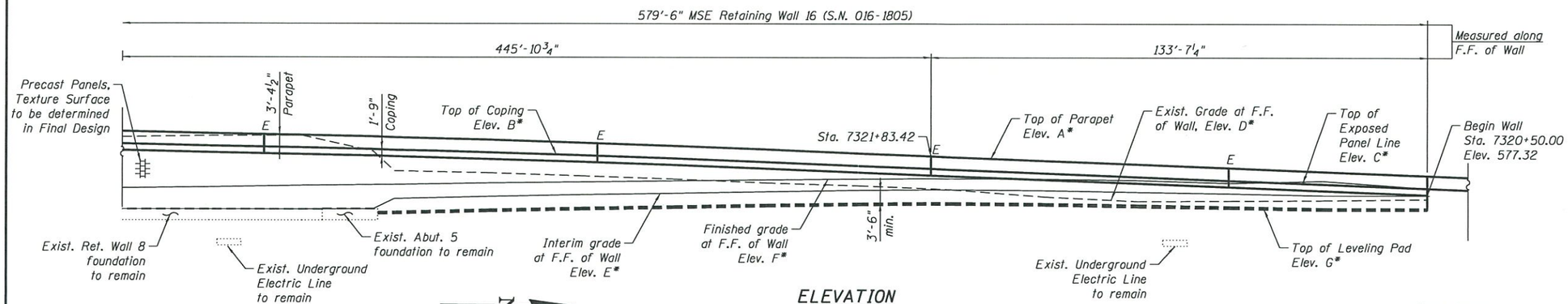

ELEVATION
(Looking at F.F. of Wall)

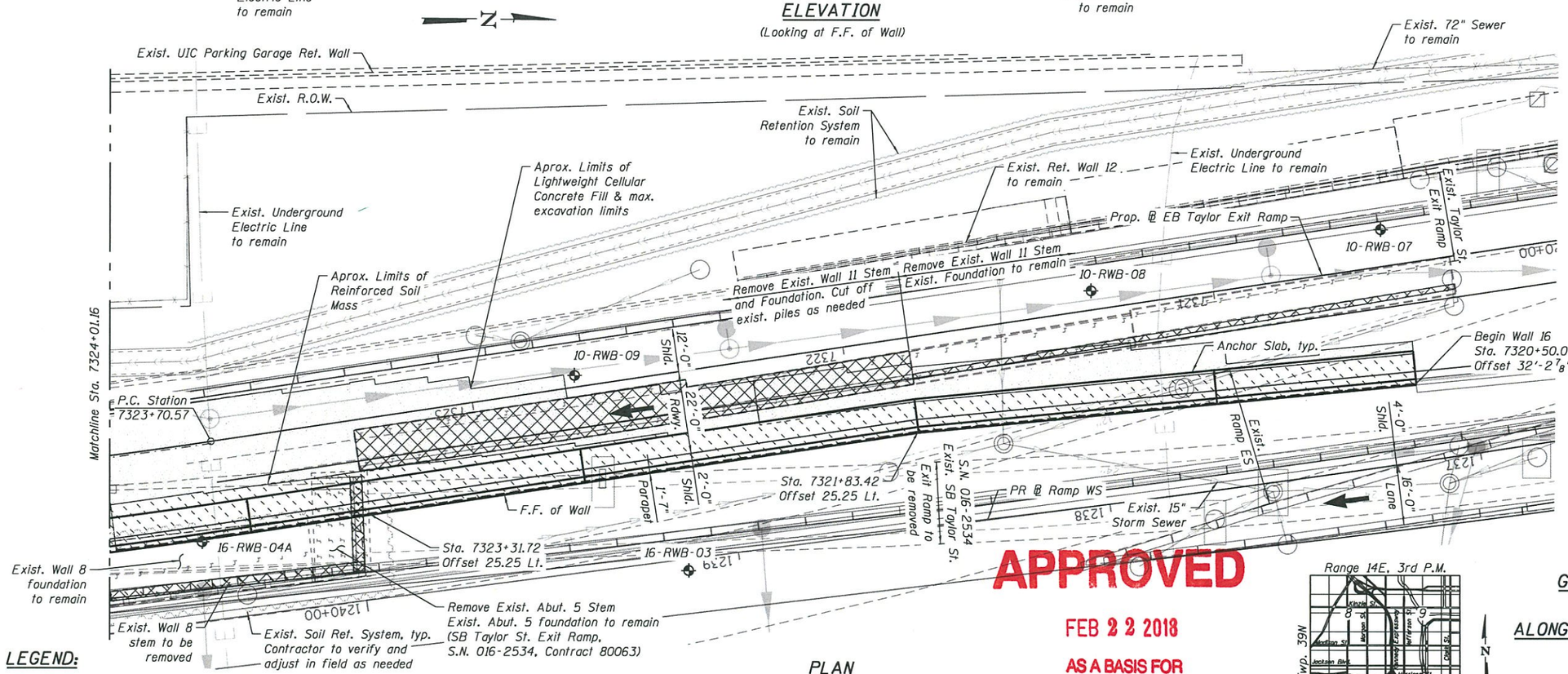

APPROVED
FEB 22 2018
AS A BASIS FOR PREPARATION OF DETAILED PLANS

PLAN

Exist. Ret. Wall 8 & 11 and Exist. Abut. 5 Removal

Lightweight Fill outside of Reinf. Soil Mass

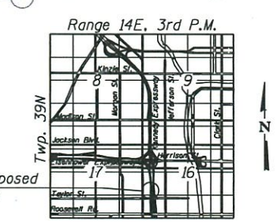

LOCATION SKETCH

LEGEND:

- Soil Boring Location
- Water Line
- Electric
- Fiber Optic
- Television Line
- Combined Sewer
- Exist. Storm Sewer
- Proposed Storm Sewer
- Gas Line
- Fire Hydrant
- Light Pole
- Exist. HP Pile
- Telephone line
- E Expansion Joint
- Proposed Barrier

DESIGN SPECIFICATIONS

2014 AASHTO LRFD Bridge Design Specifications, 7th Edition with 2015 & 2016 Interims

DESIGN STRESSES

FIELD UNITS

f'c = 3,500 psi (All other concrete)
fy = 60,000 psi (Reinforcement)

PRECAST UNITS

f'c = 4,500 psi (Precast Panels)

HIGHWAY CLASSIFICATION

F.A.I. Rte. SB I-90/94
Functional Class: Interstate
ADT: 140,500 (2012); 148,000 (2040)
ADTT: 13,994 (2012); 14,741 (2040)
DHV: 8,960 (2040)
Design Speed: 60 m.p.h.
Posted Speed: 45 m.p.h.
One-Way Traffic
Directional Distribution: 100%

Taylor Street Exit Ramp
Functional Class: Interstate
ADT: 10,700 (2012); 11,000 (2040)
ADTT: 310 (2012); 319 (2040)
DHV: 750 (2040)
Design Speed: 25 m.p.h.
Posted Speed: 25 m.p.h.
One-Way Traffic
Directional Distribution: 100%

Ramp WS
Functional Class: Interstate
ADT: 7,200 (2012); 8,000 (2040)
ADTT: 114 (2012); 127 (2040)
DHV: 710 (2040)
Design Speed: 25 m.p.h.
Posted Speed: 25 m.p.h.
One-Way Traffic
Directional Distribution: 100%

* For Elevations, see Elevations Table on Sheets 3 thru 6.

NOTES:

1. Stations and offsets are measured along Prop. @ EB Taylor Exit Ramp to the front face of Wall.
2. F.F. denotes Front Face.
3. B.F. denotes Back Face.

GENERAL PLAN & ELEVATION
RETAINING WALL 16
ALONG EB TAYLOR STREET EXIT RAMP
F.A.I. RTE. 90/94/290
SECTION 2014-013R&B-R
COOK COUNTY
STA. 7320+50.00 TO STA. 7326+25.98
STRUCTURE NO. 016-1805

AECOM

USER NAME = keserovicm	DESIGNED - MK	REVISED	
	CHECKED - ATB	REVISED	
PLOT SCALE = N.T.S.	DRAWN - MK	REVISED	
PLOT DATE = 2/8/2018	CHECKED - ATB	REVISED	

STATE OF ILLINOIS
DEPARTMENT OF TRANSPORTATION

SHEET NO. 1 OF 6 SHEETS

F.A.I. RTE.	SECTION	COUNTY	TOTAL SHEETS	SHEET NO.
90/94/290	2014-013R&B-R	COOK	6	1
		CONTRACT NO. 60X93		
		ILLINOIS FED. AID PROJECT		

016-1805-CIRCLE100-SHT-ACM-ST-TSL-001.dgn

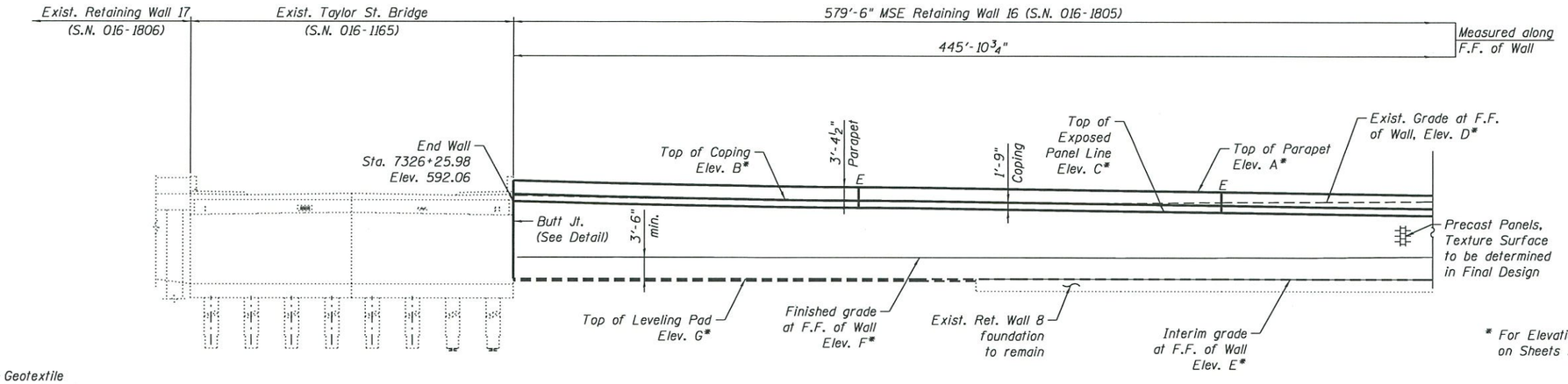

* For Elevations, see Elevations Table on Sheets 3 thru 6.

ELEVATION

(Looking at F.F. of Wall)

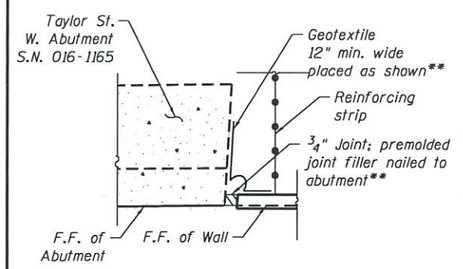

BUTT JOINT DETAIL

** Cost of Geotextile Fabric and Joint is included in cost of Mechanically Stabilized Earth Retaining Wall, Special.

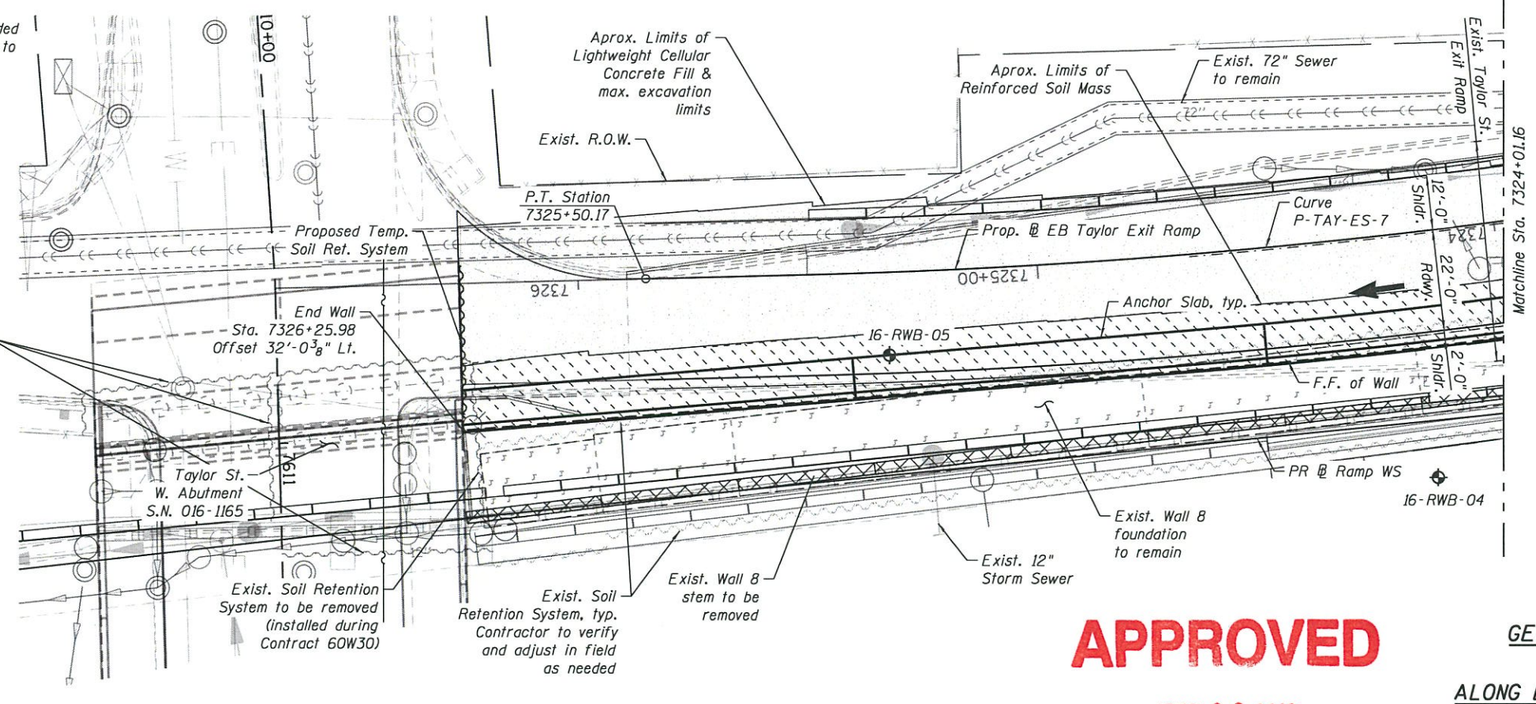

CURVE DATA

Prop. Curve P-TAY-ES-7
P.I. Sta. = 7324+60.48
Δ = 7° 04' 21" (Rt.)
D = 3° 56' 16"
R = 1,455.00'
T = 89.92'
L = 179.61'
E = 2.78'
e = 3.00%
T.R. = NA
S.E. Run = 38'
P.C. Sta. = 7323+70.57
P.T. Sta. = 7325+50.17
DS = 30

NOTES:

1. Stations and offsets are measured along Prop. ℄ EB Taylor Exit Ramp to the front face of Wall.
2. F.F. denotes Front Face.
3. B.F. denotes Back Face.

LEGEND:

⊕	Soil Boring Location	— CTV —	Television Line	—G—	Gas Line	—T—	Telephone Line
—W—	Water Line		Combined Sewer		Fire Hydrant		
—E—	Electric		Exist. Storm Sewer		Light Pole	E	Expansion Joint
— FO —	Fiber Optic		Proposed Storm Sewer		Exist. HP Pile		Proposed Barrier

PLAN

Exist. Ret. Wall 8 & 11 and Exist. Abut. 5 Removal

Lightweight Fill outside of Reinf. Soil Mass

APPROVED

FEB 22 2018

AS A BASIS FOR PREPARATION OF DETAILED PLANS

GENERAL PLAN & ELEVATION
RETAINING WALL 16
ALONG EB TAYLOR STREET EXIT RAMP
F.A.I. RTE. 90/94/290
SECTION 2014-013R&B-R
COOK COUNTY
STA. 7320+50.00 TO STA. 7326+25.98
STRUCTURE NO. 016-1805

AECOM

USER NAME = keserovicm	DESIGNED - MK	REVISED	
	CHECKED - ATB	REVISED	
PLOT SCALE = N.T.S.	DRAWN - MK	REVISED	
PLOT DATE = 2/8/2018	CHECKED - ATB	REVISED	

STATE OF ILLINOIS
DEPARTMENT OF TRANSPORTATION

SHEET NO. 2 OF 6 SHEETS

F.A.I. RTE.	SECTION	COUNTY	TOTAL SHEETS	SHEET NO.
90/94/290	2014-013R&B-R	COOK	6	2
		CONTRACT NO. 60X93		
		ILLINOIS FED. AID PROJECT		

016-1805-CIRCLE100-SHT-ACM-ST-TSL-002.dgn

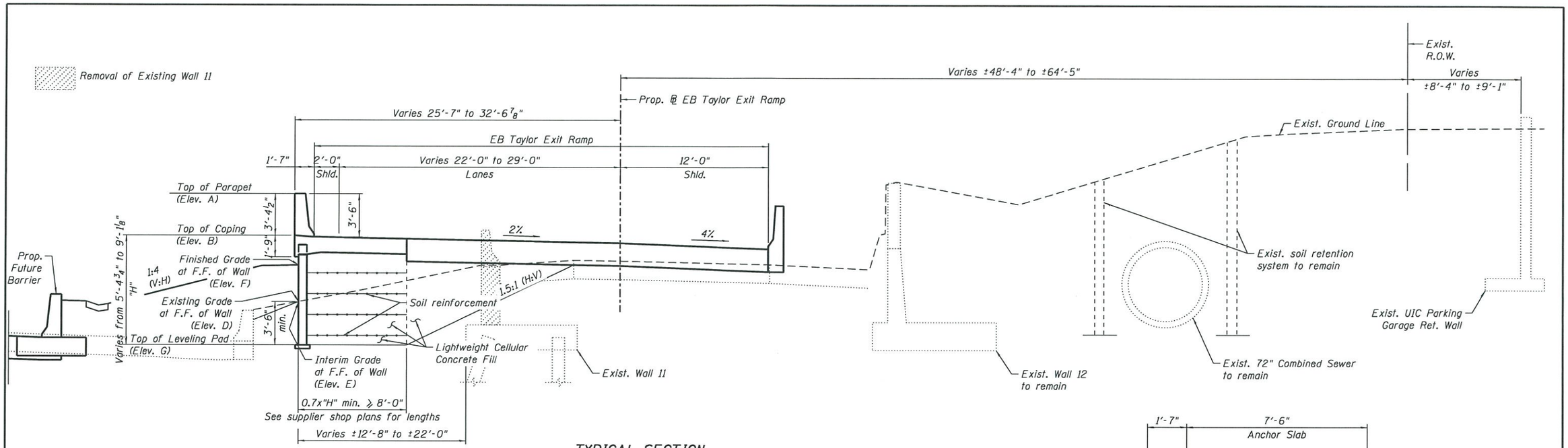

TYPICAL SECTION

(Sta. 7320+50.00 to Sta. 7321+83.42)
(Looking Upstation)

ELEVATION TABLE

Wall Type	Station	Offset	Elevation A	Elevation B	Elevation C	Elevation D	Elevation E	Elevation F	Elevation G
MSE	7320+50.00	32.24 Lt.	582.44	579.07	577.32	575.97	577.17	578.80	573.67
MSE	7320+75.00	30.93 Lt.	583.41	580.04	578.29	575.74	577.68	579.45	574.18
MSE	7321+00.00	29.62 Lt.	584.38	581.01	579.26	575.55	577.78	580.61	574.28
MSE	7321+25.00	28.31 Lt.	585.36	581.99	580.24	575.41	578.18	580.95	574.68
MSE	7321+50.00	27.00 Lt.	586.33	582.96	581.21	577.25	578.59	581.26	575.09
MSE	7321+75.00	25.69 Lt.	587.30	583.93	582.18	578.63	578.82	581.61	575.32
MSE	7321+83.42	25.37 Lt.	587.64	584.27	582.52	578.90	578.67	581.49	575.17

Elevation A - Top of Parapet
Elevation B - Top of Coping
Elevation C - Top of Exposed Panel Line
Elevation D - Existing Grade at F.F. of Wall
Elevation E - Interim Grade at F.F. of Wall
Elevation F - Finished Grade at F.F. of Wall
Elevation G - Top of Leveling Pad

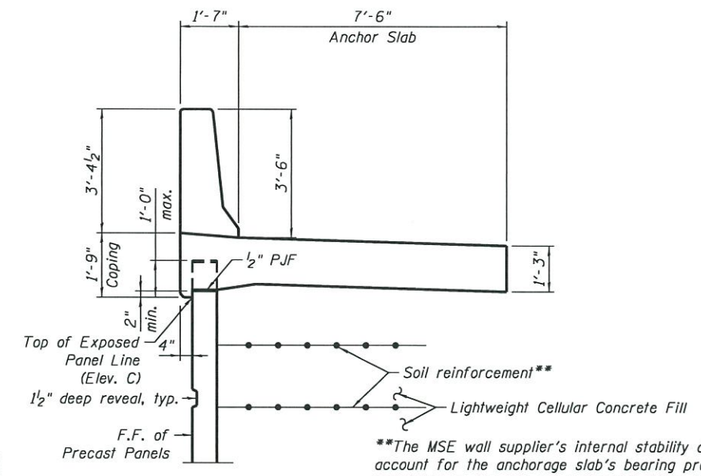

**The MSE wall supplier's internal stability design shall account for the anchorage slab's bearing pressure surcharge of 1.0 ksf and horizontal sliding force of 0.7 kips/ft. of wall.

SECTION THRU PARAPET AND ANCHORAGE SLAB

(Looking Upstation)

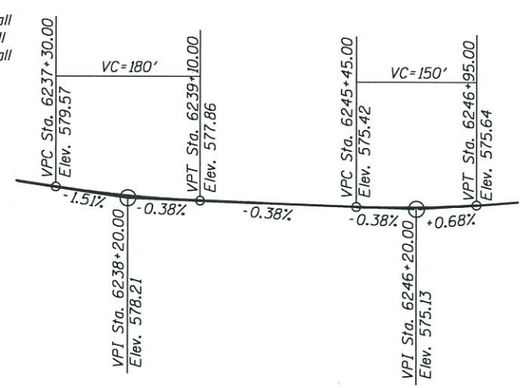

PROFILE GRADE

(along ℄ SB I-90/94)

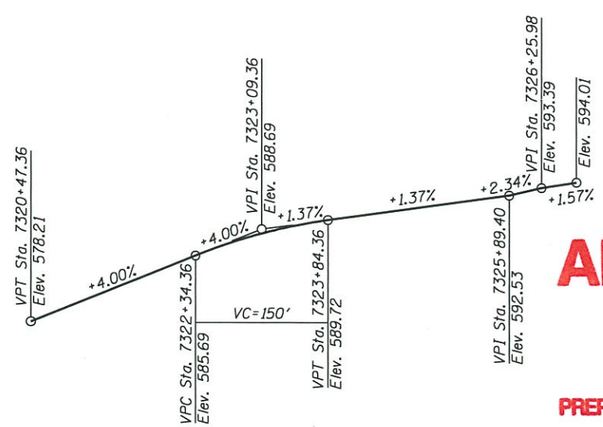

PROFILE GRADE

(along ℄ EB Taylor Exit Ramp)

APPROVED
FEB 22 2018
AS A BASIS FOR PREPARATION OF DETAILED PLANS

TYPICAL SECTION I
RETAINING WALL 16
ALONG EB TAYLOR STREET EXIT RAMP
F.A.I. RTE. 90/94/290
SECTION 2014-013R&B-R
COOK COUNTY
STA. 7320+50.00 TO STA. 7326+25.98
STRUCTURE NO. 016-1805

AECOM

USER NAME = keserovlcm	DESIGNED - MK	REVISED	
	CHECKED - ATB	REVISED	
PLOT SCALE = N.T.S.	DRAWN - MK	REVISED	
PLOT DATE = 2/8/2018	CHECKED - ATB	REVISED	

STATE OF ILLINOIS
DEPARTMENT OF TRANSPORTATION

SHEET NO. 3 OF 6 SHEETS

F.A.I. RTE.	SECTION	COUNTY	TOTAL SHEETS	SHEET NO.
90/94/290	2014-013R&B-R	COOK	6	3
		CONTRACT NO. 60X93		
		ILLINOIS FED. AID PROJECT		

016-1805-CIRCLE100-SHT-ACM-ST-TSL-003.dgn

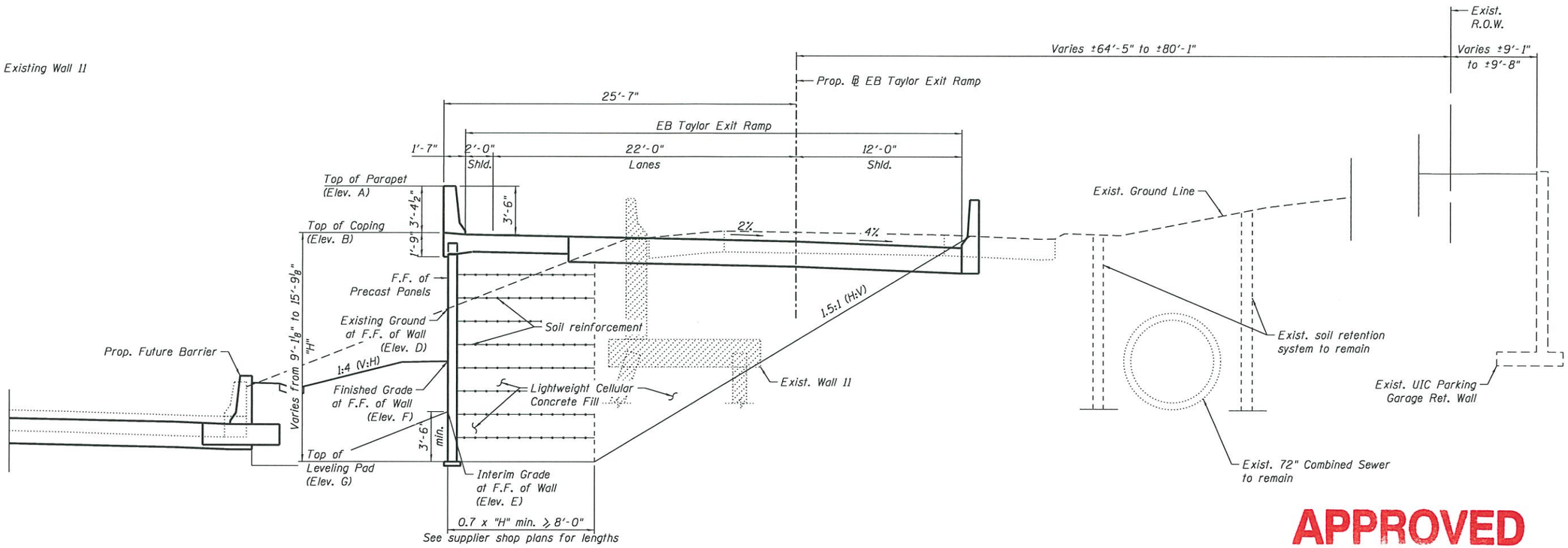

TYPICAL SECTION

(Sta. 7321+83.42 to Sta. 7323+11.00)
(Looking Upstation)

APPROVED
FEB 22 2018
AS A BASIS FOR
PREPARATION OF DETAILED PLANS

ELEVATION TABLE

Wall Type	Station	Offset	Elevation A	Elevation B	Elevation C	Elevation D	Elevation E	Elevation F	Elevation G
MSE	7321+83.42	25.37 Lt.	587.64	584.27	582.52	578.90	578.67	581.49	575.17
MSE	7322+00.00	25.25 Lt.	588.30	584.93	583.18	579.35	578.64	581.31	575.14
MSE	7322+25.00	25.25 Lt.	589.30	585.93	584.18	581.98	578.25	580.99	574.75
MSE	7322+50.00	25.25 Lt.	590.27	586.90	585.15	579.87	577.83	580.66	574.33
MSE	7322+75.00	25.25 Lt.	591.15	587.78	586.03	580.49	577.44	580.34	573.94
MSE	7323+00.00	25.25 Lt.	591.92	588.55	586.80	581.77	576.89	579.99	573.39
MSE	7323+11.00	25.25 Lt.	592.22	588.85	587.10	585.30	576.58	579.92	573.08

Elevation A - Top of Parapet
Elevation B - Top of Coping
Elevation C - Top of Exposed Panel Line
Elevation D - Existing Grade at F.F. of Wall
Elevation E - Interim Grade at F.F. of Wall
Elevation F - Finished Grade at F.F. of Wall
Elevation G - Top of Leveling Pad

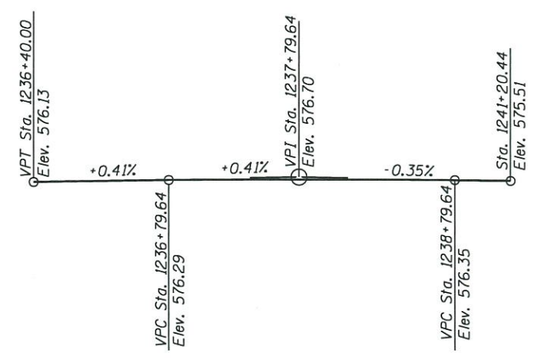

PROFILE GRADE

(along ℄ Ramp WS)

NOTE:

1. For Section thru Parapet and Anchorage Slab, see Sheet 3.

TYPICAL SECTION II
RETAINING WALL 16
ALONG EB TAYLOR STREET EXIT RAMP
F.A.I. RTE. 90/94/290
SECTION 2014-013R&B-R
COOK COUNTY
STA. 7320+50.00 TO STA. 7326+25.98
STRUCTURE NO. 016-1805

016-1805-CIRCLE100-SHT-ACM-ST-TSL-004.dgn

AECOM

USER NAME = keserovicm	DESIGNED - MK	REVISED	
	CHECKED - ATB	REVISED	
PLOT SCALE = N.T.S.	DRAWN - MK	REVISED	
PLOT DATE = 2/8/2018	CHECKED - ATB	REVISED	

STATE OF ILLINOIS
DEPARTMENT OF TRANSPORTATION

SHEET NO. 4 OF 6 SHEETS

F.A.I. RTE.	SECTION	COUNTY	TOTAL SHEETS	SHEET NO.
90/94/290	2014-013R&B-R	COOK	6	4
		CONTRACT NO. 60X93		
	ILLINOIS	FED. AID PROJECT		

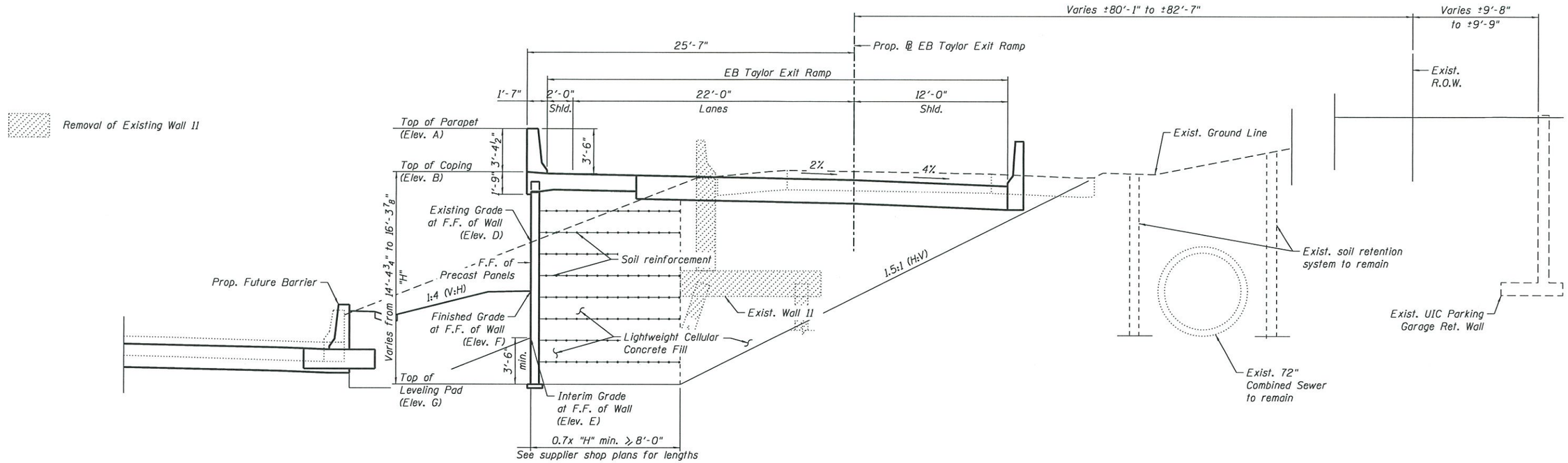

TYPICAL SECTION

(Sta. 7323+11.00 to Sta. 7323+31.72)
(Looking Upstation)

NOTE:

1. For Section thru Parapet and Anchorage Slab, see Sheet 3.

ELEVATION TABLE

Wall Type	Station	Offset	Elevation A	Elevation B	Elevation C	Elevation D	Elevation E	Elevation F	Elevation G
MSE	7323+11.00	25.25 Lt.	592.22	588.85	587.10	585.30	576.58	579.92	573.08
MSE	7323+25.00	25.25 Lt.	592.57	589.20	587.45	587.72	576.37	579.58	572.87
MSE	7323+31.72	25.25 Lt.	592.73	589.36	587.61	588.30	578.46	579.55	574.96

Elevation A - Top of Parapet
Elevation B - Top of Coping
Elevation C - Top of Exposed Panel Line
Elevation D - Existing Grade at F.F. of Wall
Elevation E - Interim Grade at F.F. of Wall
Elevation F - Finished Grade at F.F. of Wall
Elevation G - Top of Leveling Pad

APPROVED
FEB 22 2018
AS A BASIS FOR PREPARATION OF DETAILED PLANS

TYPICAL SECTION III
RETAINING WALL 16
ALONG EB TAYLOR STREET EXIT RAMP
F.A.I. RTE. 90/94/290
SECTION 2014-013R&B-R
COOK COUNTY
STA. 7320+50.00 TO STA. 7326+25.98
STRUCTURE NO. 016-1805

016-1805-CIRCLE100-SHT-ACM-ST-TSL-005.dgn

AECOM

USER NAME = keserovlcm	DESIGNED - MK	REVISED	
	CHECKED - ATB	REVISED	
PLOT SCALE = N.T.S.	DRAWN - MK	REVISED	
PLOT DATE = 2/8/2018	CHECKED - ATB	REVISED	

STATE OF ILLINOIS
DEPARTMENT OF TRANSPORTATION

SHEET NO. 5 OF 6 SHEETS

F.A.I. RTE.	SECTION	COUNTY	TOTAL SHEETS	SHEET NO.
90/94/290	2014-013R&B-R	COOK	6	5
		CONTRACT NO. 60X93		
		ILLINOIS FED. AID PROJECT		

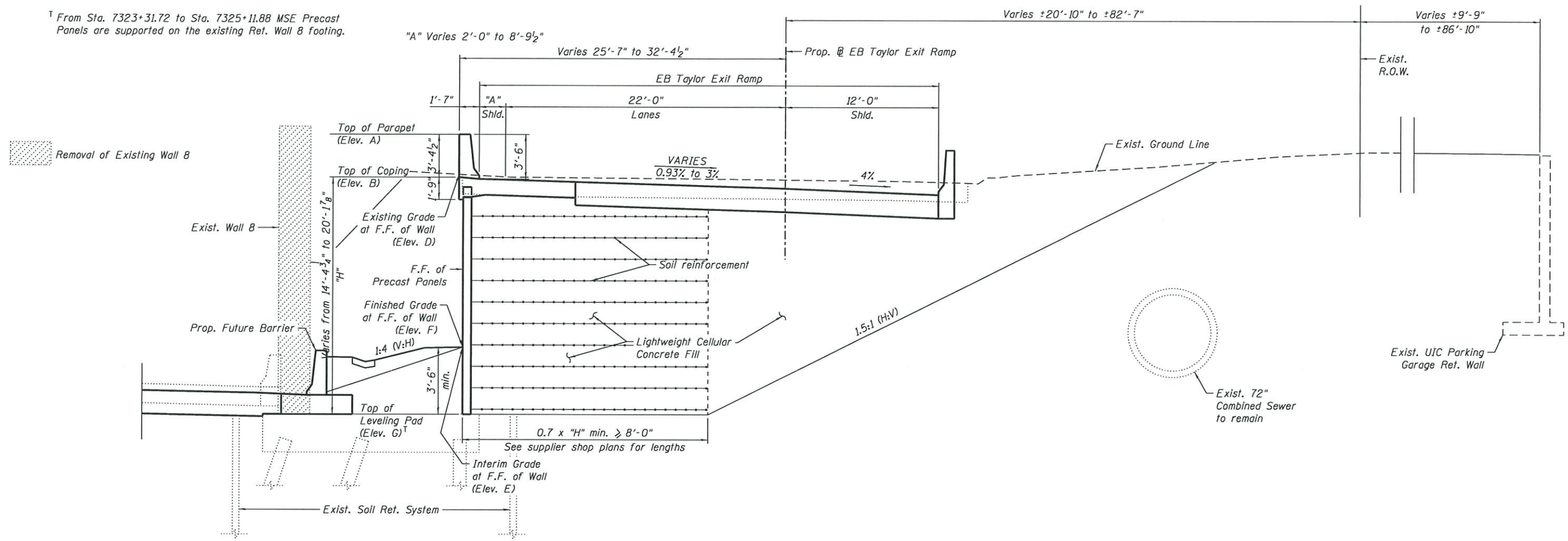

TYPICAL SECTION

(Sta. 7323+31.72 to Sta. 7326+25.98)
(Looking Upstation)

ELEVATION TABLE

Wall Type	Station	Offset	Elevation A	Elevation B	Elevation C	Elevation D	Elevation E	Elevation F	Elevation G
MSE	7323+31.72	25.25 Lt.	592.73	589.36	587.61	588.30	578.46	579.55	574.96
MSE	7323+50.00	25.25 Lt.	593.12	589.75	588.00	594.09	578.05	579.18	574.55
MSE	7323+75.00	25.25 Lt.	593.61	590.24	588.49	592.94	577.48	578.79	573.98
MSE	7324+00.00	25.25 Lt.	594.15	590.78	589.03	592.54	577.01	578.45	573.51
MSE	7324+25.00	25.25 Lt.	594.50	591.13	589.38	592.90	576.73	578.24	573.23
MSE	7324+50.00	25.25 Lt.	594.84	591.47	589.72	592.23	576.60	578.11	573.10
MSE	7324+75.00	25.27 Lt.	595.18	591.81	590.06	592.03	576.66	578.10	573.16
MSE	7325+00.00	25.64 Lt.	595.54	592.17	590.42	592.14	576.84	578.12	573.34
MSE	7325+25.00	26.44 Lt.	595.90	592.53	590.78	592.34	577.03	578.14	573.53
MSE	7325+50.00	27.67 Lt.	596.15	592.78	591.03	592.70	577.22	578.15	573.72
MSE	7325+75.00	29.11 Lt.	596.38	593.01	591.26	578.65	577.40	578.17	573.90
MSE	7326+00.00	30.54 Lt.	596.71	593.34	591.59	593.33	577.58	578.18	574.08
MSE	7326+25.00	31.98 Lt.	597.16	593.79	592.04	593.87	577.74	578.18	574.24
MSE	7326+25.98	32.03 Lt.	597.18	593.81	592.06	593.84	577.15	578.17	573.65

Elevation A - Top of Parapet
Elevation B - Top of Coping
Elevation C - Top of Exposed Panel Line
Elevation D - Existing Grade at F.F. of Wall
Elevation E - Interim Grade at F.F. of Wall
Elevation F - Finished Grade at F.F. of Wall
Elevation G - Top of Leveling Pad

NOTE:

1. For Section thru Parapet and Anchorage Slab, see Sheet 3.

APPROVED
FEB 22 2018
AS A BASIS FOR PREPARATION OF DETAILED PLANS

TYPICAL SECTION IV
RETAINING WALL 16
ALONG EB TAYLOR STREET EXIT RAMP
F.A.I. RTE. 90/94/290
SECTION 2014-013R&B-R
COOK COUNTY
STA. 7320+50.00 TO STA. 7326+25.98
STRUCTURE NO. 016-1805

016-1805-CIRCLE100-SHT-ACM-ST-TSL-006.dgn

AECOM

USER NAME = keserovicm	DESIGNED - MK	REVISED	
	CHECKED - ATB	REVISED	
PLOT SCALE = N.T.S.	DRAWN - MK	REVISED	
PLOT DATE = 2/8/2018	CHECKED - ATB	REVISED	

STATE OF ILLINOIS
DEPARTMENT OF TRANSPORTATION

SHEET NO. 6 OF 6 SHEETS

F.A.I. RTE.	SECTION	COUNTY	TOTAL SHEETS	SHEET NO.
90/94/290	2014-013R&B-R	COOK	6	6
		CONTRACT NO. 60X93		
		ILLINOIS FED. AID PROJECT		