Bench Mark: Silver survey nail south end of bridge on eastside sta. 72+18.3, 23' right

Existing structure: S.N. 016-2124 built as F.A.I. Route 173 Project BU-265(20) Section 267-1617-15D in 1958. The structure was rehabilitated & widened in 1981 under F.A.I. Route 173 Project IR-000S(12) Section 81-26722-01-GS. The existing bridge has five simple spans which consist of reinforced concrete deck slab resting on 48" PPC I-beams. Span lengths are 34'-6", 84'-9", 40'-0", 67'-0", and 34'-6". The structure width consists of 61'-0" face to face of parapet for vehicular deck and 15'-0" for equestrian deck for a total deck width of 78'-7". The structure has overall length of 266'-1". Traffic to be detoured during Bridge reconstruction.

No salvage

HIGHWAY CLASSIFICATION

F.A.U Rte. 2729 - East River Road
Functional Class: Major Collector
ADT: 20,500 (2006); 21,300 (2030)
ADTT: 600 (2006); 640 (2030)
DHV: 1,700 (2030)
Speed: 45 m.p.h (posted); 45 m.p.h (design)
Two-way traffic Directional Dist. 50:50

F.A.I Rte. 190 - I-90
Functional Class: Interstate
ADT: 204,100 (2011); 315,000 (2040)
ADTT: 8570 (2011); 13,230 (2040)
DHV: 7415 (One-way)
Speed: 55 m.p.h (posted); 55 m.p.h (design)

DESIGN SPECIFICATIONS

AASHTO LRFD Bridge Design Specifications, 6th Edition (2012) with 2013 Interim Revisions

LOADING HL-93

Allow 50#/sq. ft. for future wearing surface.

DESIGN STRESSES

FIELD UNITS

f'c = 3,500 psi
fy = 60,000 psi (Reinforcement)
fy = 50,000 psi (M270 Grade 50)

SEISMIC DATA

Seismic Performance Zone (SPZ) = 1
Design Spectral Acceleration at 1.0 sec. (SD1) = 0.060g
Design Spectral Acceleration at 0.2 sec. (SDS) = 0.108g
Soil Site Class = C

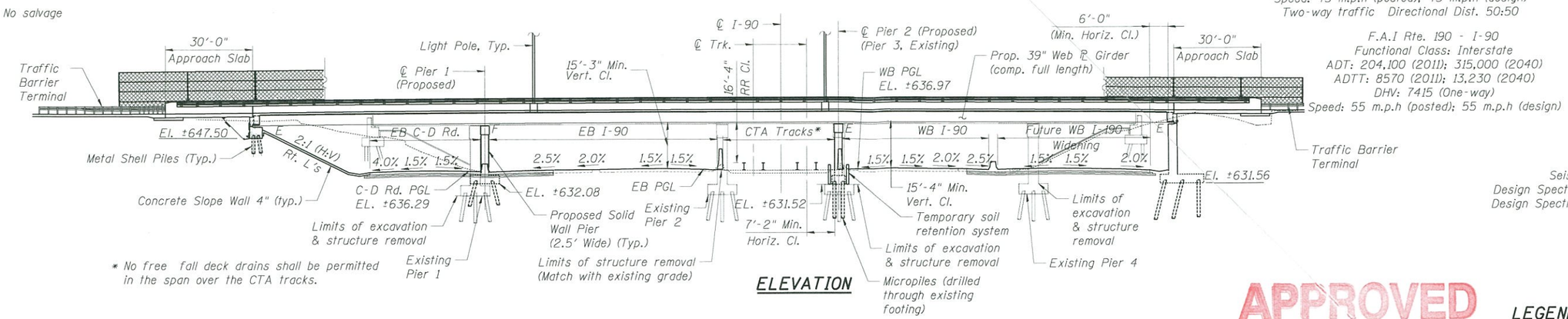

ELEVATION

APPROVED
SEP 25 2014
AS A BASIS FOR PREPARATION OF DETAILED PLANS

LEGEND

- Soil Boring Locations
- CTA Tracks
- FO — Existing Fiber Optic Line
- E — Existing/Proposed Electric Line
- Existing Storm Sewer
- Proposed Storm Sewer
- Light Pole
- Temporary soil retention system

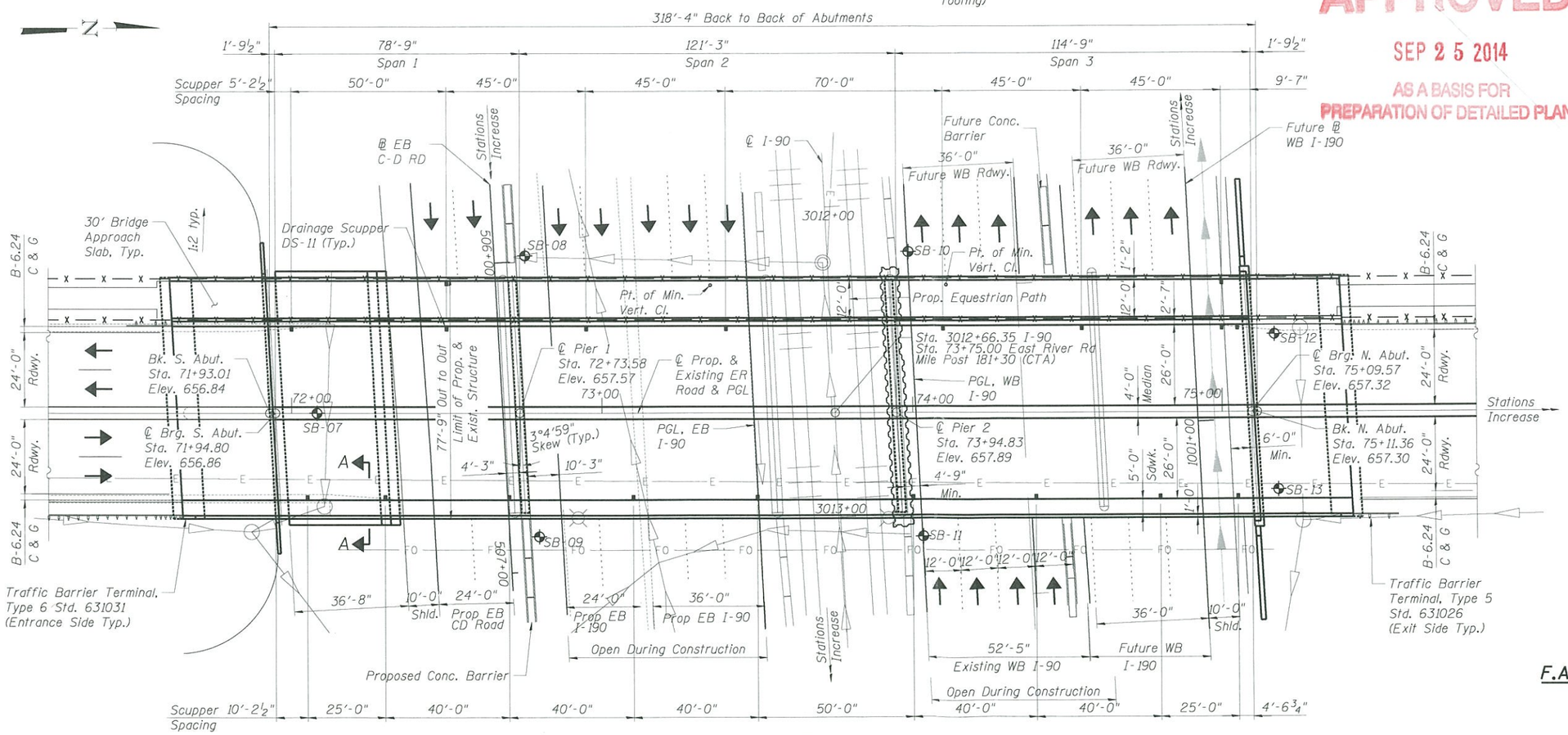

PLAN

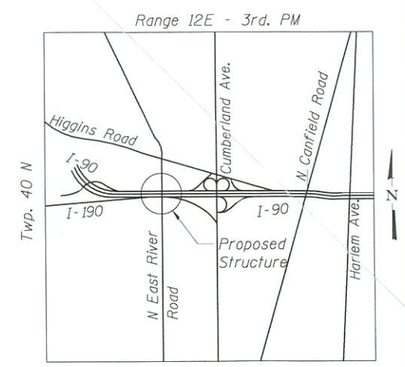

LOCATION SKETCH

GENERAL PLAN
EAST RIVER ROAD OVER I-90
F.A.I RTE. 190 - SEC. (1517R-1 & 1617B)13
COOK COUNTY
STATION 73+75.00
STRUCTURE NO. 016-2280

exp U.S. Services Inc. Chicago, IL. BUILDINGS·EARTH & ENVIRONMENT·ENERGY INDUSTRIAL·INFRASTRUCTURE·SUSTAINABILITY	USER NAME = $USER$	DESIGNED - KK	REVISED	STATE OF ILLINOIS DEPARTMENT OF TRANSPORTATION	GENERAL PLAN EAST RIVER ROAD OVER I-90	F.A.I. RTE. 190	SECTION (1517R-1&1617B)13
		CHECKED - RSN	REVISED			COUNTY COOK	TOTAL SHEETS / SHEET NO.
	PLOT SCALE = $SCALE$	DRAWN - PK	REVISED			CONTRACT NO. 60X56	
	PLOT DATE = 8-25-2014	CHECKED - KK	REVISED		SHEET NO. 1 OF 3 SHEETS	ILLINOIS FED. AID PROJECT	

FILE NAME = $FILEL$

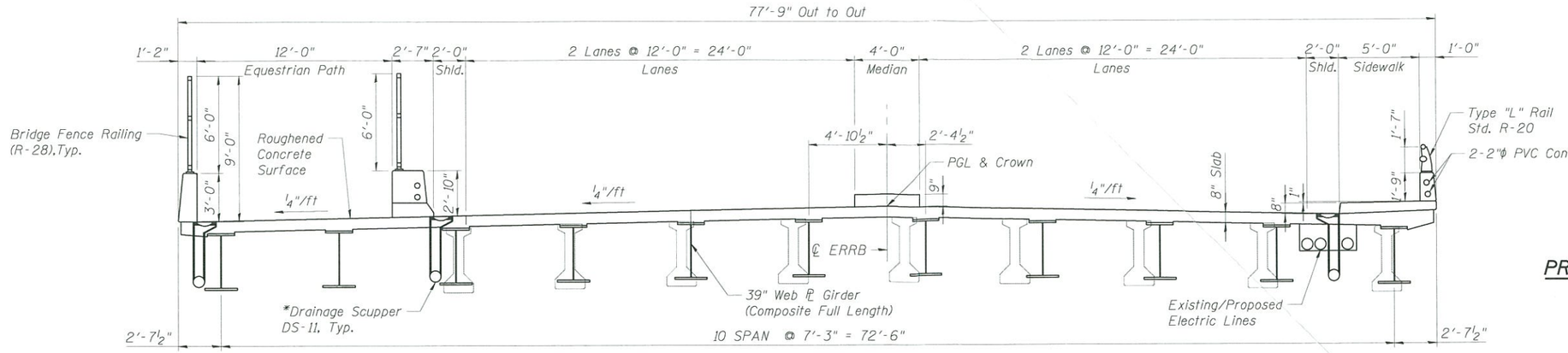

CROSS SECTION
(Looking North)

* Drainage scuppers shall be attached to downspouts or to a closed drainage system.

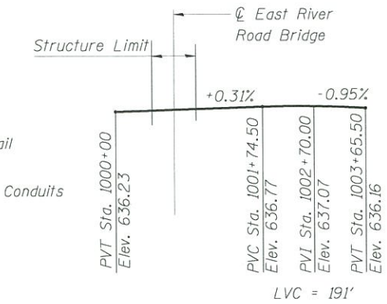

PROFILE GRADE - FUTURE ℄ I-190 WB

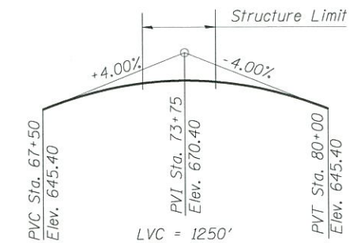

PROFILE GRADE - EAST RIVER ROAD BRIDGE

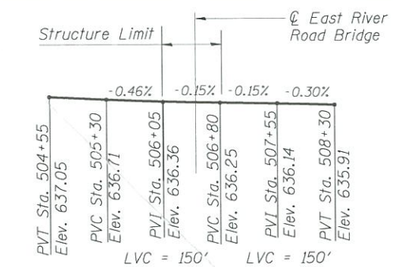

PROFILE GRADE - PROPOSED EB C-D ROAD

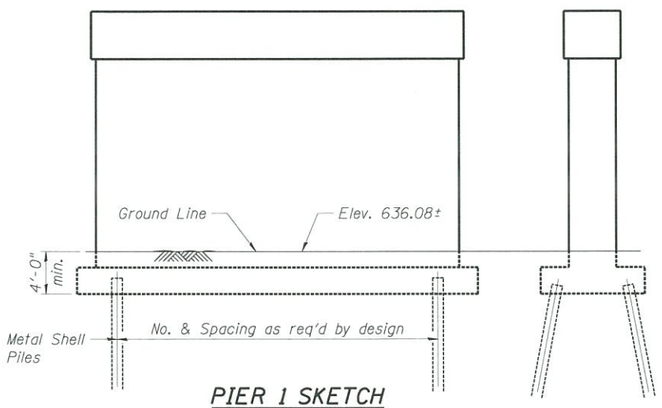

PIER 1 SKETCH

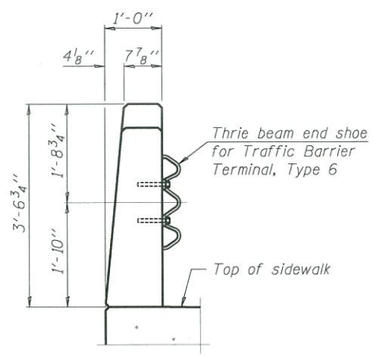

SECTION A-A

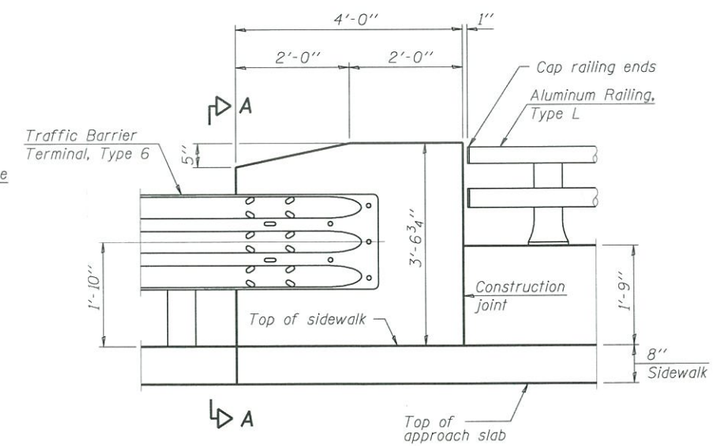

ELEVATION

RAILING END TREATMENT FOR TYPE 6 TERMINAL
(End treatment for Type 5 Terminal is similar but with butt connection)

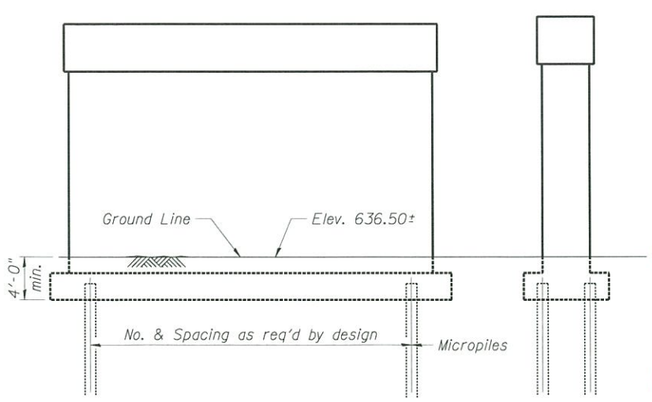

PIER 2 SKETCH

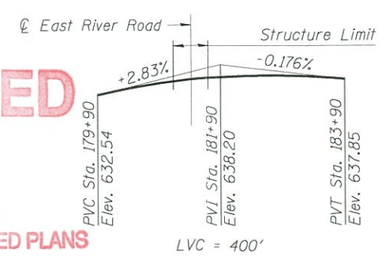

PROFILE GRADE - CTA TRACKS
(Preliminary)

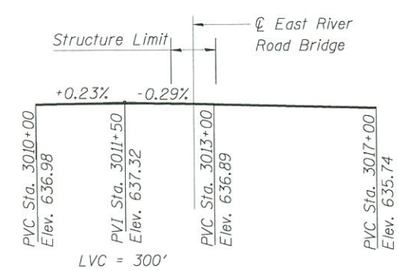

PROFILE GRADE - FUTURE WB I-90

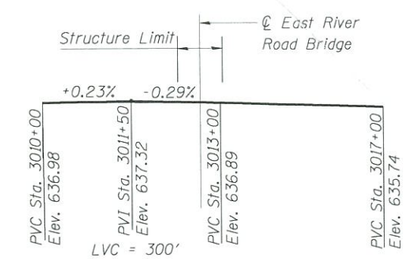

PROFILE GRADE - PROPOSED EB I-90

APPROVED
SEP 25 2014
AS A BASIS FOR PREPARATION OF DETAILED PLANS

DETAILS - I
EAST RIVER ROAD OVER I-90
F.A.I RTE. 190 - SEC. (1517R-1 & 1617B)13
COOK COUNTY
STATION 73+75.00
STRUCTURE NO. 016-2280

exp U.S. Services Inc. Chicago, IL BUILDINGS·EARTH & ENVIRONMENT·ENERGY INDUSTRIAL·INFRASTRUCTURE·SUSTAINABILITY	USER NAME = $USER$	DESIGNED - KK	REVISED	STATE OF ILLINOIS DEPARTMENT OF TRANSPORTATION	DETAILS – I STRUCTURE NO. 016-2280	F.A.I. RTE. 190	SECTION (1517R-1&1617B)13
		CHECKED - RSN	REVISED			COUNTY COOK	TOTAL SHEETS / SHEET NO.
	PLOT SCALE = $SCALE$	DRAWN - KK	REVISED			CONTRACT NO. 60X56	
	PLOT DATE = 8-25-2014	CHECKED - RSN	REVISED		SHEET NO. 2 OF 3 SHEETS	ILLINOIS FED. AID PROJECT	

FILE NAME = $FILEL$

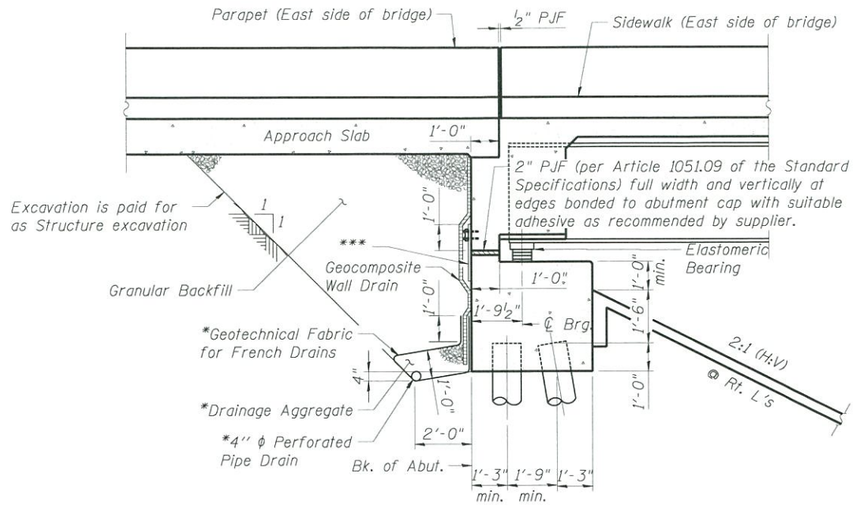

SECTION THRU SOUTH ABUTMENT

(Horiz. dim. @ Rt. L's)

*** Fabric Reinforced Elastomeric Mat according to Section 1028 of the Std. Specs. Fabric mat shall be 24" wide and attached full width and vertically at edges to the abutment cap with a 3/8" x 5" steel plate and 1/2" ϕ studs with nuts and washer at 12" cts. Cost included with Concrete Superstructure

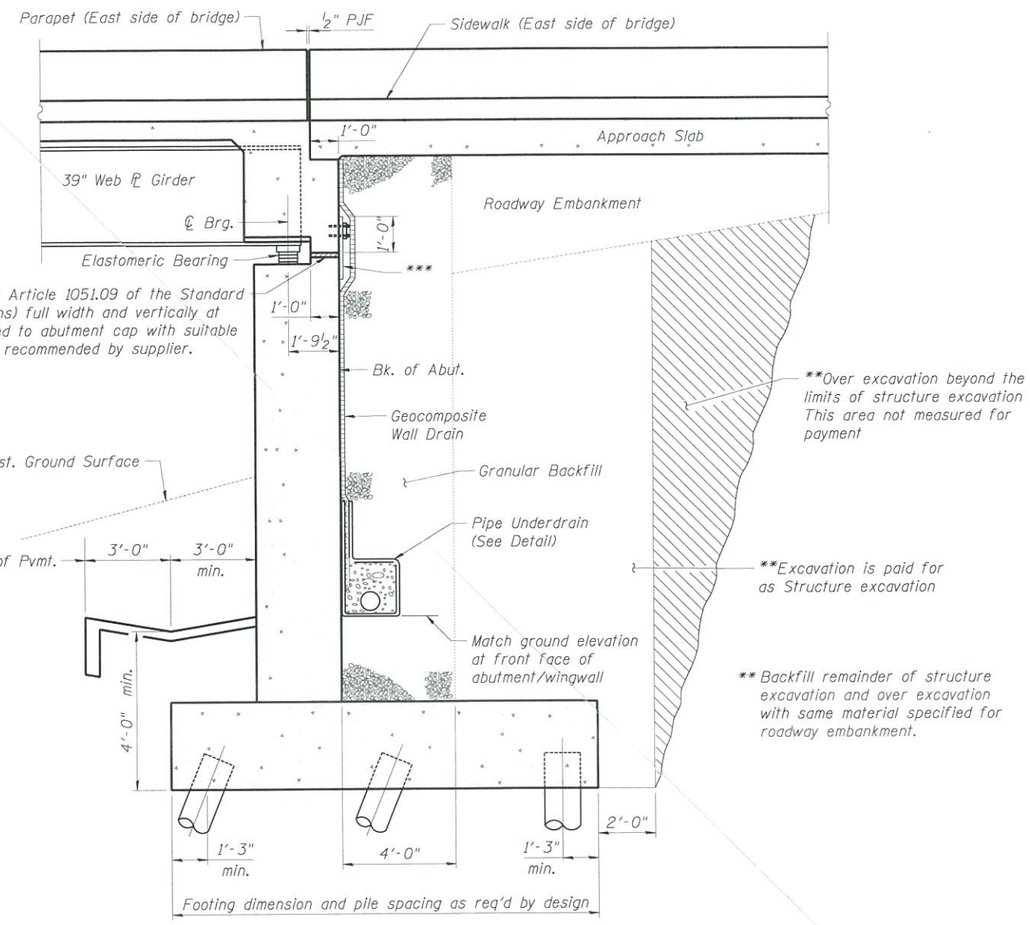

SECTION THRU NORTH ABUTMENT

(Horiz. dim. @ Rt. L's)

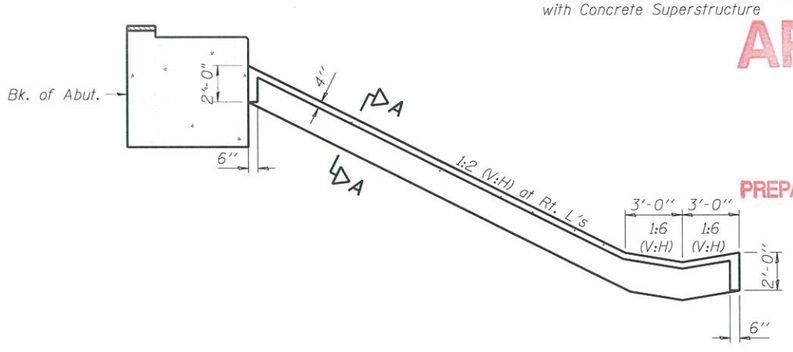

SECTION THRU CONCRETE SLOPEWALL

(South Abutment Only)

APPROVED

SEP 25 2014

AS A BASIS FOR PREPARATION OF DETAILED PLANS

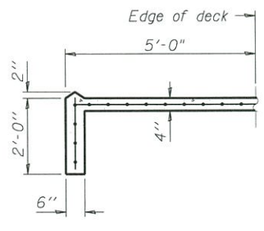

SECTION A-A

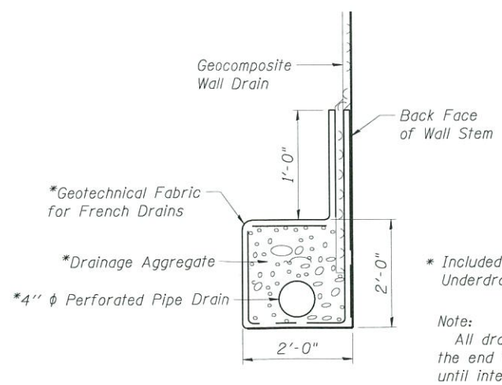

* Included in the cost of Pipe Underdrains for Structures.

Note:
All drainage system components shall extend to 2'-0" from the end of each wingwall except an outlet pipe shall extend until intersecting with the side slopes. The pipes shall drain into concrete headwalls. (See Article 601.05 of the Standard Specifications and Highway Standard 601101).

PIPE UNDERDRAIN DETAIL

DETAILS - II
EAST RIVER ROAD OVER I-90
F.A.I RTE. 190 - SEC. (1517R-1 & 1617B)13
COOK COUNTY
STATION 73+75.00
STRUCTURE NO. 016-2280

exp U.S. Services Inc. Chicago, IL BUILDINGS·EARTH & ENVIRONMENT·ENERGY INDUSTRIAL·INFRASTRUCTURE·SUSTAINABILITY	USER NAME = $USER$	DESIGNED - KK	REVISED	STATE OF ILLINOIS DEPARTMENT OF TRANSPORTATION	DETAILS – II STRUCTURE NO. 016-2280	F.A.I. RTE. 190	SECTION (1517R-1&1617B)13	COUNTY COOK
		CHECKED - RSN	REVISED					TOTAL SHEETS / SHEET NO.
	PLOT SCALE = $SCALE$	DRAWN - KK	REVISED					CONTRACT NO. 60X56
	PLOT DATE = 8-25-2014	CHECKED - RSN	REVISED		SHEET NO. 3 OF 3 SHEETS			ILLINOIS FED. AID PROJECT

FILE NAME = $FILEL$