Bench Mark:
Chiseled square on NE corner of NB IL-171 bridge wingwall over BNSF RR. El. 640.61

Chiseled square of SW corner of SB IL-171 bridge wingwall over Des Plaines River. El. 622.14

Existing Structure: S.N. 016-2456 (Northbound) and S.N. 016-2457 (Southbound) were originally built in 1964 under Section 0707-675HB. The structures consist of a 5½" concrete deck with a 2" microsilica overlay and a 7" concrete deck with a 1½" microsilica overlay, respectively. The northbound structure consists of a twelve span mainline bridge and a six span ramp bridge (Ramp B) supported by 14 multi-column and two solid wall concrete piers (56 & 57) (end piers 23, 35 & 55 not included), predominantly founded on Steel BP-piles with a select few on the north side of the structure supported on spread footings. The mainline northbound structure is 966'-0" centerline of pier to centerline of pier, with an out to out deck width which varies from 36'-0" to 69'-10⅝" with no skew angle. The Ramp B Structure has an out to out deck width of 28'-0", with a varying skew angle. The southbound structure consists of a twelve span mainline bridge and a three span ramp bridge (Ramp E) supported by 13 multi-column concrete piers (end piers 4, 16 & 41 not included), predominantly founded on Steel BP-piles with a select few on the north side of the structure supported on spread footings. The mainline southbound structure is 973'-3⅝" centerline of pier to centerline of pier, with an out to out deck width which varies from 36'-0" to 79'-1" with no skew angle. The Ramp E Structure has an out to out deck width of 28'-0", with a varying skew angle. Traffic to be maintained utilizing crossovers.

No salvage.

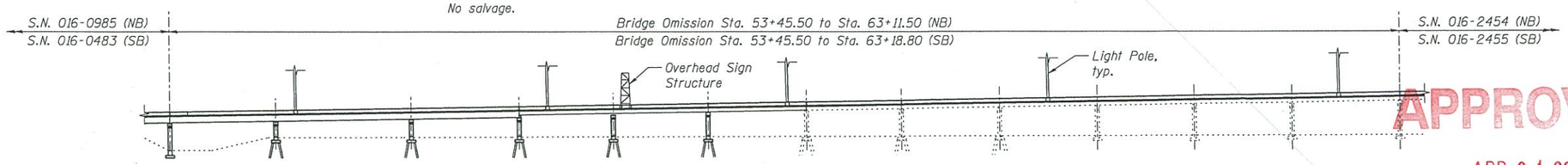

ELEVATION
(Looking South along NB Mainline)

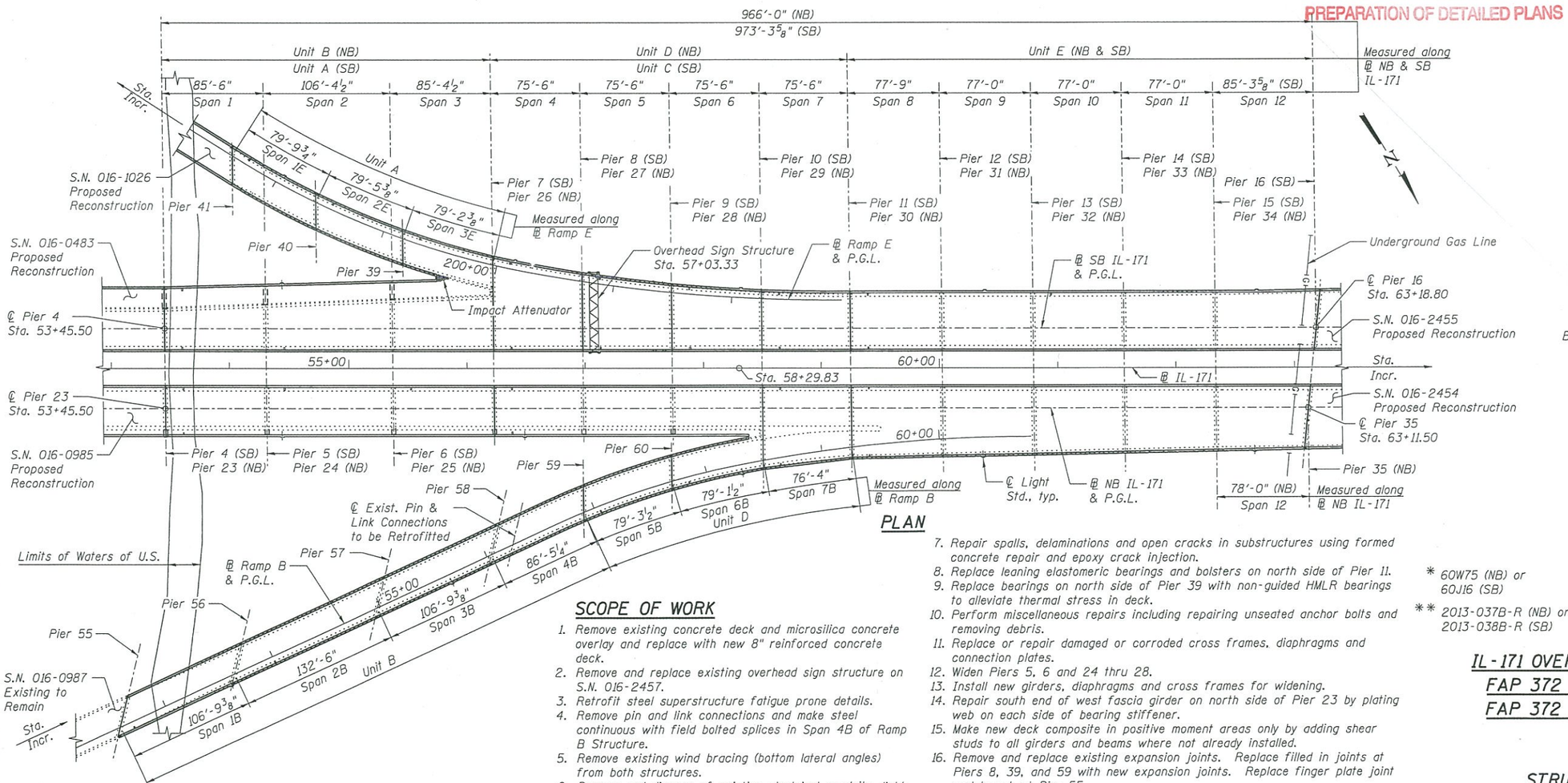

PLAN

SCOPE OF WORK

1. Remove existing concrete deck and microsilica concrete overlay and replace with new 8" reinforced concrete deck.
2. Remove and replace existing overhead sign structure on S.N. 016-2457.
3. Retrofit steel superstructure fatigue prone details.
4. Remove pin and link connections and make steel continuous with field bolted splices in Span 4B of Ramp B Structure.
5. Remove existing wind bracing (bottom lateral angles) from both structures.
6. Remove and dispose of existing electrical conduits, light poles, and junction boxes attached to the beams and/or deck. Add new conventional light poles.
7. Repair spalls, delaminations and open cracks in substructures using formed concrete repair and epoxy crack injection.
8. Replace leaning elastomeric bearings and bolsters on north side of Pier 11.
9. Replace bearings on north side of Pier 39 with non-guided HMLR bearings to alleviate thermal stress in deck.
10. Perform miscellaneous repairs including repairing unseated anchor bolts and removing debris.
11. Replace or repair damaged or corroded cross frames, diaphragms and connection plates.
12. Widen Piers 5, 6 and 24 thru 28.
13. Install new girders, diaphragms and cross frames for widening.
14. Repair south end of west fascia girder on north side of Pier 23 by plating web on each side of bearing stiffener.
15. Make new deck composite in positive moment areas only by adding shear studs to all girders and beams where not already installed.
16. Remove and replace existing expansion joints. Replace filled in joints at Piers 8, 39, and 59 with new expansion joints. Replace finger plate joint and trough at Pier 55.
17. Replace existing fixed bearings on south side of Pier 59 with new elastomeric bearings and steel extensions.

APPROVED
APR 04 2014
AS A BASIS FOR PREPARATION OF DETAILED PLANS

HIGHWAY CLASSIFICATION

Structure No. 016-2456
IL 171 NB (FAP 372)
Functional Class: Other Principal Arterial
ADT: 39,471 (2008); 40,000 (2030)
DHV: 3,285 (2030)
ADTT: 5,501 (13.8%) (2030)
Design Speed: 50 m.p.h. (Mainline)
Posted Speed: 50 m.p.h. (Mainline)
Design Speed: 45 m.p.h. (Ramp B)
Posted Speed: 40 m.p.h. (Ramp B)

Structure No. 016-2457
IL 171 SB (FAP 372)
Functional Class: Other Principal Arterial
ADT: 40,280 (2008); 42,000 (2030)
DHV: 3,515 (2030)
ADTT: 5,766 (13.7%) (2030)
Design Speed: 50 m.p.h. (Mainline)
Posted Speed: 50 m.p.h. (Mainline)
Design Speed: 45 m.p.h. (Ramp E)
Posted Speed: 40 m.p.h. (Ramp E)

LOADING HS20-44
No future wearing surface allowed.

DESIGN STRESSES
FIELD UNITS (New Construction)
f'c = 3,500 psi
fy = 60,000 psi (Reinforcement)
fy = 50,000 psi (AASHTO M270 Grade 50)

FIELD UNITS (Exist. Construction)
f'c = 3,500 psi
fy = 40,000 psi (Reinforcement)
fy = 36,000 psi (Structural Steel)

DESIGN SPECIFICATIONS
2002 AASHTO Standard Specifications for Highway Bridges

SEISMIC DATA
Seismic Performance Category (SPC) = A
Bedrock Acceleration Coefficient (A) = 0.04g
Site Coefficient (S) = 1.0

LOCATION SKETCH

* 60W75 (NB) or 60J16 (SB)

** 2013-037B-R (NB) or 2013-038B-R (SB)

GENERAL PLAN
IL-171 OVER DES PLAINES RIVER VALLEY
FAP 372 (NB) - SECTION 2013-037B-R
FAP 372 (SB) - SECTION 2013-038B-R
COOK COUNTY
STATION 58+29.83
STRUCTURE NO. 016-2456 (NB)
STRUCTURE NO. 016-2457 (SB)

benesch
engineers · scientists · planners
Alfred Benesch & Company
205 North Michigan Avenue, Suite 2400
Chicago, Illinois 60601
312-565-0450 Job No. 10093

FILE NAME =	USER NAME = dschriks	DESIGNED - DTS	REVISED -	STATE OF ILLINOIS DEPARTMENT OF TRANSPORTATION		F.A.P. RTE.	SECTION	COUNTY	TOTAL SHEETS / SHEET NO.
01624562457-60J16-TSL-001.dgn		CHECKED - AAY	REVISED -			372	**	COOK	9 / 1
	PLOT SCALE =	DRAWN - KMS	REVISED -					CONTRACT NO. *	
	PLOT DATE = 3/13/2014	CHECKED - AAY/KJN	REVISED -		SHEET NO. 1 OF 9 SHEETS			ILLINOIS FED. AID PROJECT	

X:\10000S\10093\Eng_Docs_Phase_II\SN_016_2456_2457_1st_Ave_over_Des_Plaines_River_Valley\TS&L\01624562457-60J16-TSL-001.dgn
3/13/2014 2:30:12 PM

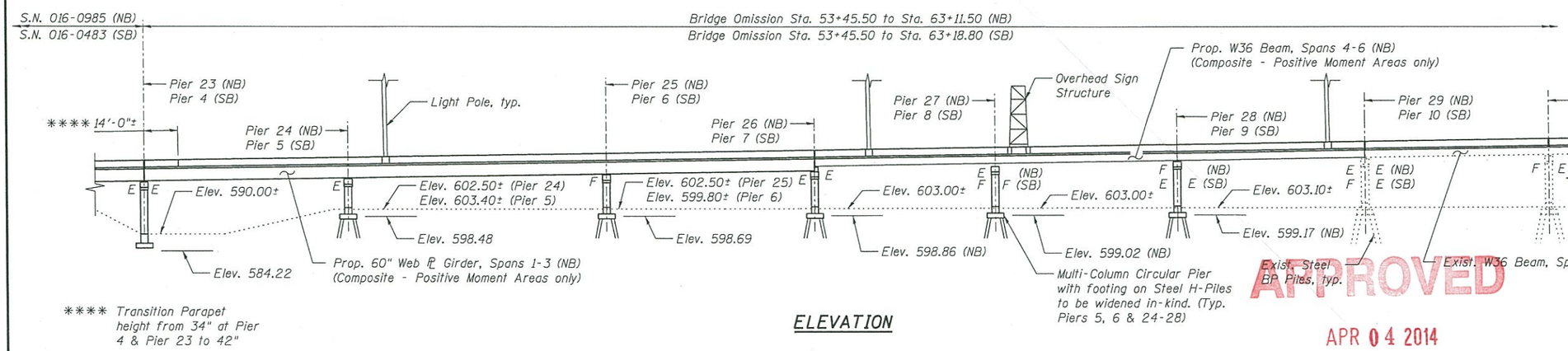

ELEVATION

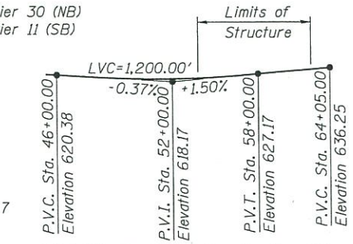

PROFILE GRADE NB IL-171
(Along ℄ NB IL-171)

APPROVED
APR 04 2014
AS A BASIS FOR
PREPARATION OF DETAILED PLANS

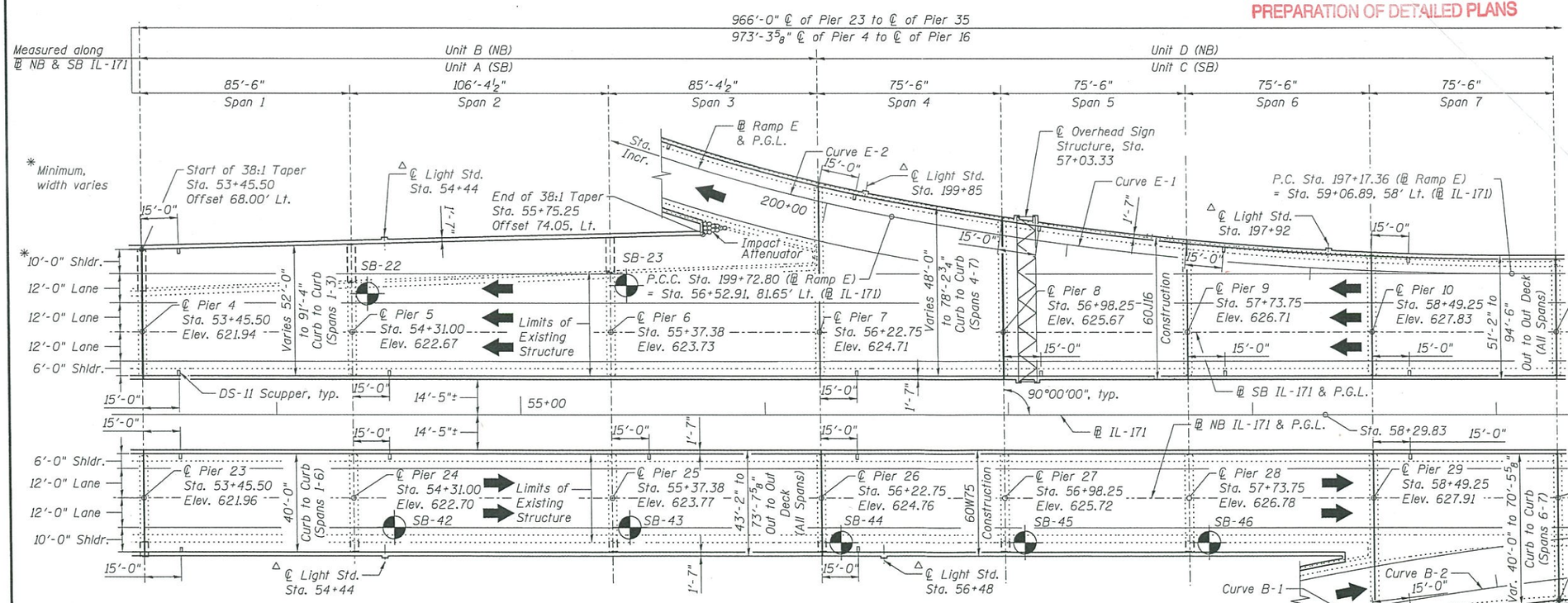

PLAN

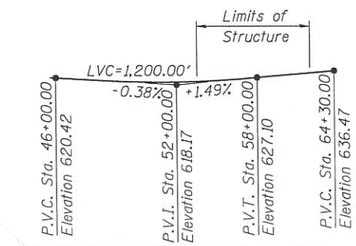

PROFILE GRADE SB IL-171
(Along ℄ SB IL-171)

△ Stations shall be finalized during final design.
△△ End of taper at Sta. 64+80.49, Offset 64.35' Rt.

** 60W75 (NB) or 60J16 (SB)
*** 2013-037B-R (NB) or 2013-038B-R (SB)

GENERAL PLAN AND ELEVATION
SHEET 1 OF 3
IL-171 OVER DES PLAINES RIVER VALLEY
FAP 372 (NB) - SECTION 2013-037B-R
FAP 372 (SB) - SECTION 2013-038B-R
COOK COUNTY
STATION 58+29.83
STRUCTURE NO. 016-2456 (NB)
STRUCTURE NO. 016-2457 (SB)

benesch
engineers · scientists · planners
Alfred Benesch & Company
205 North Michigan Avenue, Suite 2400
Chicago, Illinois 60601
312-565-0450
Job No. 10093

FILE NAME = 01624562457-60J16-TSL-002.dgn	USER NAME = dschrika	DESIGNED - DTS	REVISED -	STATE OF ILLINOIS DEPARTMENT OF TRANSPORTATION		F.A.P. RTE. 372	SECTION ***	COUNTY COOK
		CHECKED - AAY	REVISED -					TOTAL SHEETS 9
	PLOT SCALE =	DRAWN - KMS	REVISED -		SHEET NO. 2 OF 9 SHEETS			SHEET NO. 2
	PLOT DATE = 3/13/2014	CHECKED - AAY/KJN	REVISED -			CONTRACT NO. **		
						ILLINOIS FED. AID PROJECT		

X:\10000S\10093\Eng_Docs_Phase_II\SN_016_2456_2457_1st_Ave_over_Des_Plaines_River_Valley\TS&L\01624562457-60J16-TSL-002.dgn 2:30:15 PM 3/13/2014

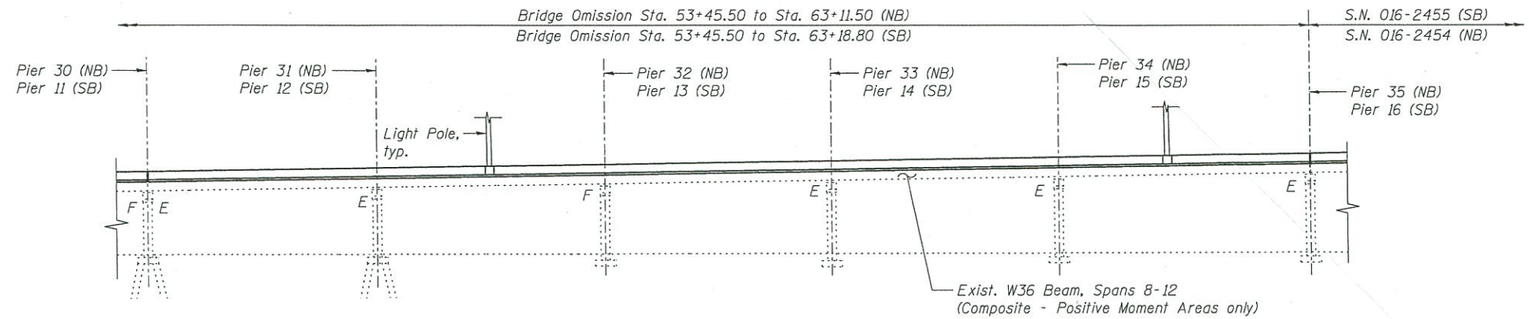

ELEVATION

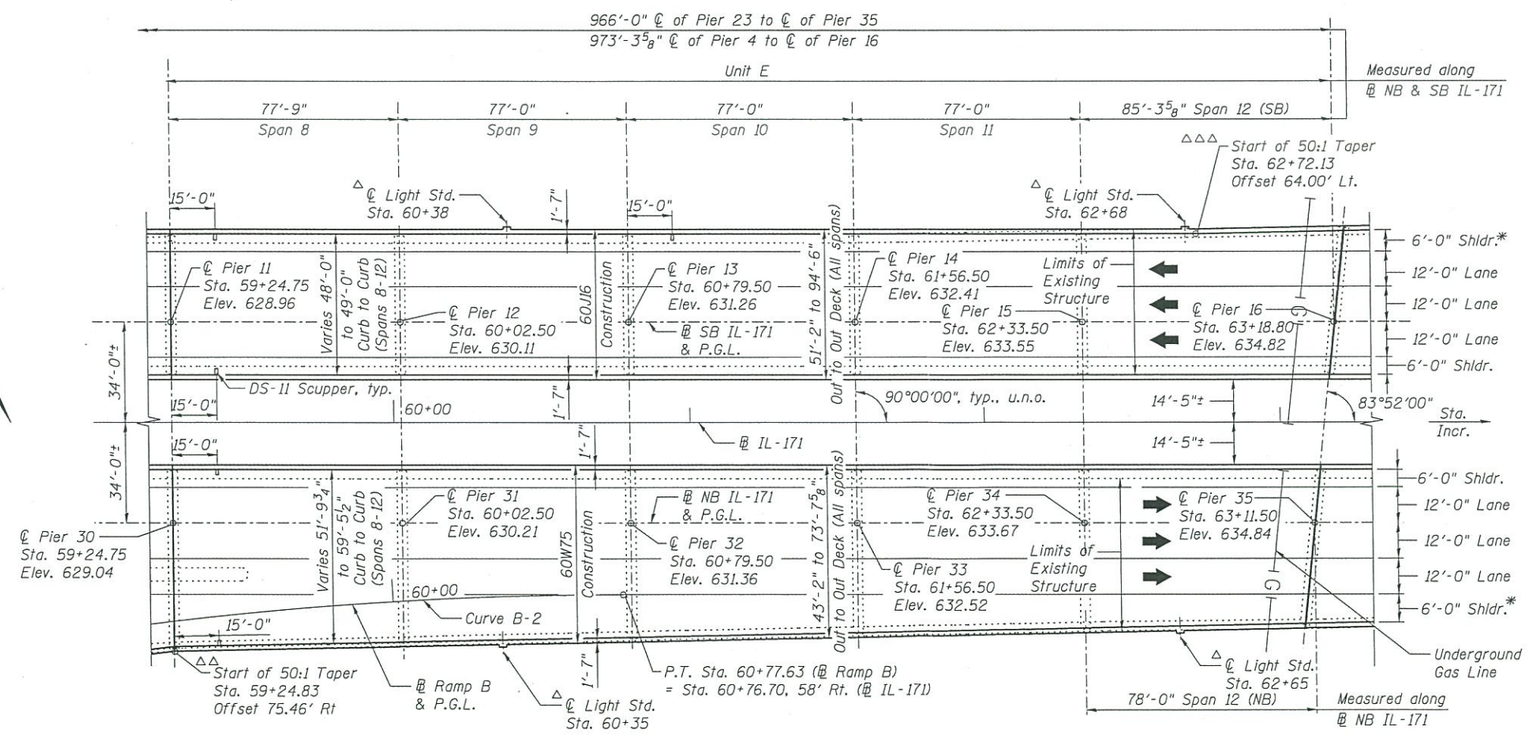

* Minimum, width varies

PLAN

△ Stations shall be finalized during final design.
△△ End of Taper at Sta. 64+80.49, Offset 64.35' Rt.
△△△ End of Taper at Sta. 67+02.02, Offset 72.60' Lt.

** 60W75 (NB) or 60J16 (SB)

*** 2013-037B-R (NB) or 2013-038B-R (SB)

APPROVED
APR 04 2014
AS A BASIS FOR
PREPARATION OF DETAILED PLANS

GENERAL PLAN AND ELEVATION
SHEET 2 OF 3
IL-171 OVER DES PLAINES RIVER VALLEY
FAP 372 (NB) - SECTION 2013-037B-R
FAP 372 (SB) - SECTION 2013-038B-R
COOK COUNTY
STATION 58+29.83
STRUCTURE NO. 016-2456 (NB)
STRUCTURE NO. 016-2457 (SB)

benesch
engineers · scientists · planners
Alfred Benesch & Company
205 North Michigan Avenue, Suite 2400
Chicago, Illinois 60601
312-565-0450
Job No. 10093

FILE NAME = 01624562457-60J16-TSL-003.dgn	USER NAME = dschriks	DESIGNED - DTS	REVISED -
		CHECKED - AAY	REVISED -
	PLOT SCALE =	DRAWN - KMS	REVISED -
	PLOT DATE = 3/13/2014	CHECKED - AAY/KJN	REVISED -

STATE OF ILLINOIS
DEPARTMENT OF TRANSPORTATION

SHEET NO. 3 OF 9 SHEETS

F.A.P. RTE.	SECTION	COUNTY	TOTAL SHEETS	SHEET NO.
372	***	COOK	9	3
		CONTRACT NO. **		
		ILLINOIS FED. AID PROJECT		

X:\10000S\10093\Eng_Docs_Phase_II\SN_016_2456_2457_1st_Ave_over_Des_Plaines_River_Valley\TS&L\01624562457-60J16-TSL-003.dgn
3/13/2014 2:30:17 PM

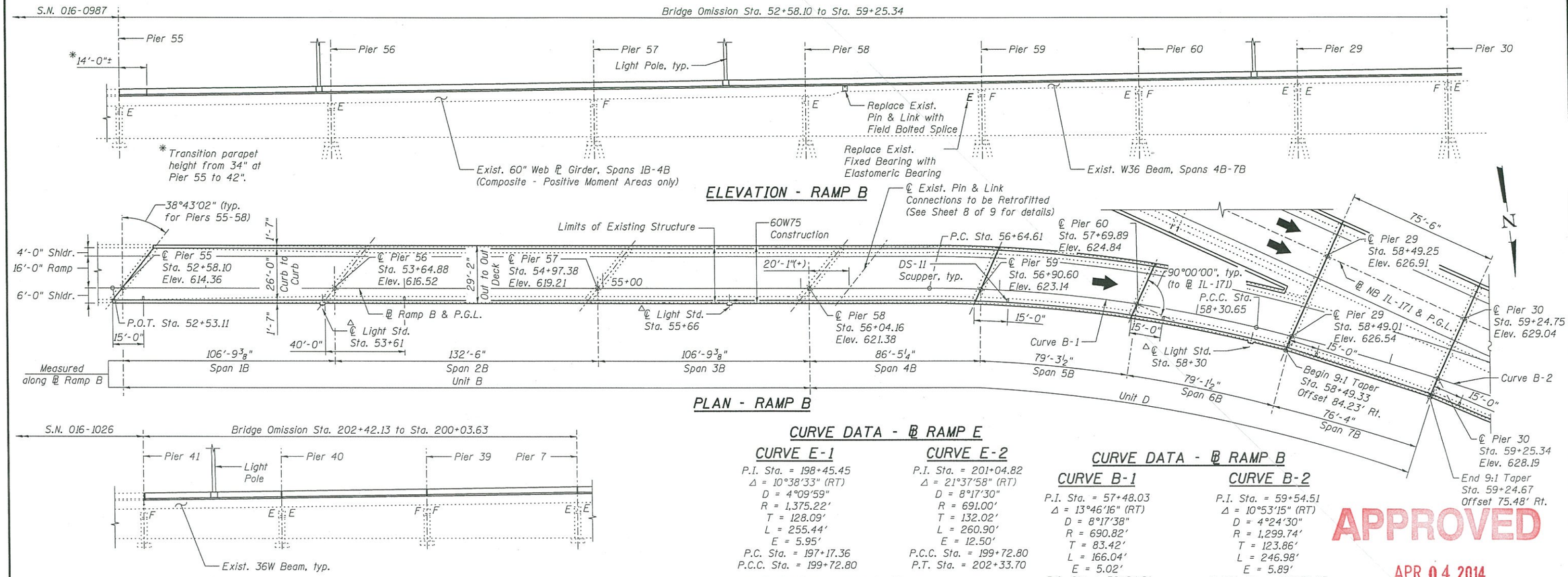

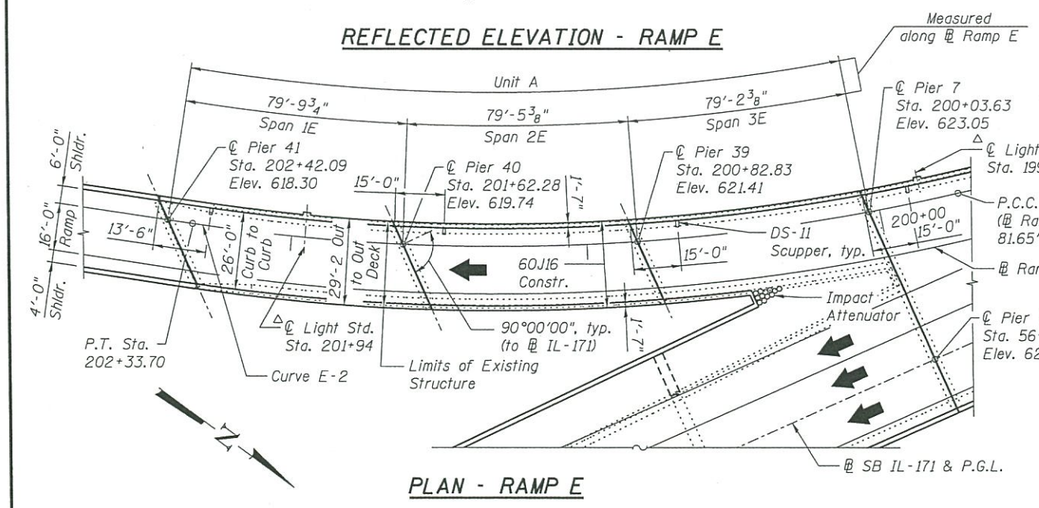

△ Station shall be finalized during final design.

CURVE DATA - ℄ RAMP E

CURVE E-1

P.I. Sta. = 198+45.45
Δ = 10°38'33" (RT)
D = 4°09'59"
R = 1,375.22'
T = 128.09'
L = 255.44'
E = 5.95'
P.C. Sta. = 197+17.36
P.C.C. Sta. = 199+72.80

CURVE E-2

P.I. Sta. = 201+04.82
Δ = 21°37'58" (RT)
D = 8°17'30"
R = 691.00'
T = 132.02'
L = 260.90'
E = 12.50'
P.C.C. Sta. = 199+72.80
P.T. Sta. = 202+33.70

S.E. DATA - RAMP E

Normal Crown = Sta. 197+06.62
2.0% to 3.56% S.E. = Sta. 197+06.62 to Sta. 198+21.67
3.56% to 3.95% S.E. = Sta. 198+21.67 to Sta. 198+50.00
3.95% to 4.55% S.E. = Sta. 198+50.00 to Sta. 198+75.00
4.55% to 5.15% S.E. = Sta. 198+75.00 to Sta. 199+00.00
5.15% to 6.2% S.E. = Sta. 199+00.00 to Sta. 199+50.00
6.2% S.E. = Sta. 199+50.00 to Sta. 201+70.00
6.2% S.E. to 2.3% S.E. = Sta. 201+70.00 to 203+00.00

CURVE DATA - ℄ RAMP B

CURVE B-1

P.I. Sta. = 57+48.03
Δ = 13°46'16" (RT)
D = 8°17'38"
R = 690.82'
T = 83.42'
L = 166.04'
E = 5.02'
P.C. Sta. = 56+64.61
P.C.C. Sta. = 58+30.65

CURVE B-2

P.I. Sta. = 59+54.51
Δ = 10°53'15" (RT)
D = 4°24'30"
R = 1,299.74'
T = 123.86'
L = 246.98'
E = 5.89'
P.C.C. Sta. = 58+30.65
P.T. Sta. = 60+77.63

S.E. DATA - RAMP B

2.0% to 2.38% S.E. = Sta. 55+50.00 to Sta. 55+75.00
2.38% to 3.25% S.E. = Sta. 55+75.00 to Sta. 56+00.00
3.25% to 3.94% S.E. = Sta. 56+00.00 to Sta. 56+25.00
3.94% to 4.69% S.E. = Sta. 56+25.00 to Sta. 56+50.00
4.69% to 5.38% S.E. = Sta. 56+50.00 to Sta. 56+75.00
5.38% to 6.50% S.E. = Sta. 56+75.00 to Sta. 57+15.00
6.50% S.E. = Sta. 57+15.00 to Sta. 58+15.00
6.50% to 5.30% S.E. = Sta. 58+15.00 to Sta. 58+45.00
5.30% S.E. = Sta. 58+45.00 to Sta. 58+80.00
5.30% to 2.00% S.E. = Sta. 58+80.00 to Sta. 59+75.00
Normal Crown = Sta. 59+75.00

APPROVED
APR 04 2014
AS A BASIS FOR PREPARATION OF DETAILED PLANS

** 60W75 (NB) or 60J16 (SB)

*** 2013-037B-R (NB) or 2013-038B-R (SB)

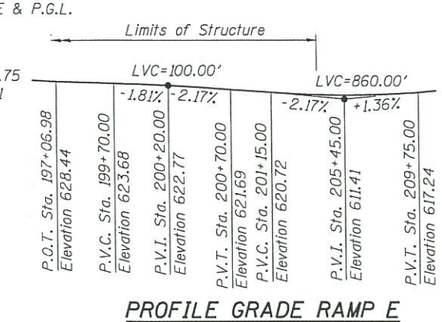

PROFILE GRADE RAMP E
(Along ℄ Ramp E)

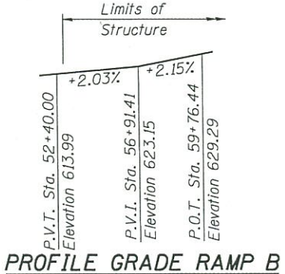

PROFILE GRADE RAMP B
(Along ℄ Ramp B)

GENERAL PLAN AND ELEVATION
SHEET 3 OF 3
IL-171 OVER DES PLAINES RIVER VALLEY
FAP 372 (NB) - SECTION 2013-037B-R
FAP 372 (SB) - SECTION 2013-038B-R
COOK COUNTY
STATION 58+29.83
STRUCTURE NO. 016-2456 (NB)
STRUCTURE NO. 016-2457 (SB)

benesch
engineers · scientists · planners
Alfred Benesch & Company
205 North Michigan Avenue, Suite 2400
Chicago, Illinois 60601
312-565-0450 Job No. 10093

STATE OF ILLINOIS
DEPARTMENT OF TRANSPORTATION

FILE NAME = 01624562457-60J16-TSL-004.dgn	USER NAME = dschriks	DESIGNED - DTS	REVISED -
		CHECKED - AAY	REVISED -
	PLOT SCALE =	DRAWN - KMS	REVISED -
	PLOT DATE = 3/13/2014	CHECKED - AAY/KJN	REVISED -

SHEET NO. 4 OF 9 SHEETS

F.A.P. RTE.	SECTION	COUNTY	TOTAL SHEETS	SHEET NO.
372	***	COOK	9	4
		CONTRACT NO. **		
		ILLINOIS FED. AID PROJECT		

X:\10000S\10093\Eng_Docs_Phase_II\SN_016_2456_2457_1st_Ave_over_Des_Plaines_River_Valley\TS&L\01624562457-60J16-TSL-004.dgn
3/13/2014 2:30:18 PM

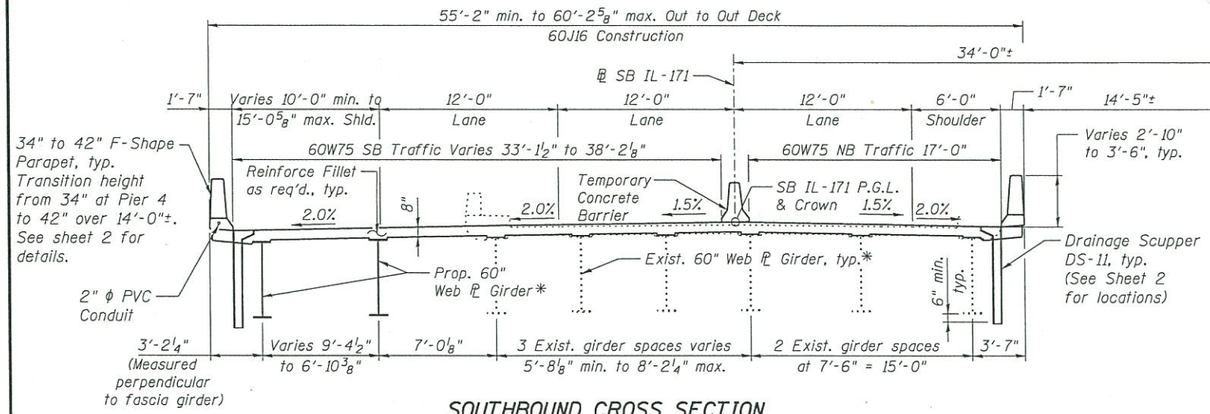

SOUTHBOUND CROSS SECTION

(Pier 4 to Pier 6)
Looking Upstation
All dimensions measured perpendicular to ℄ SB IL-171 unless noted otherwise.

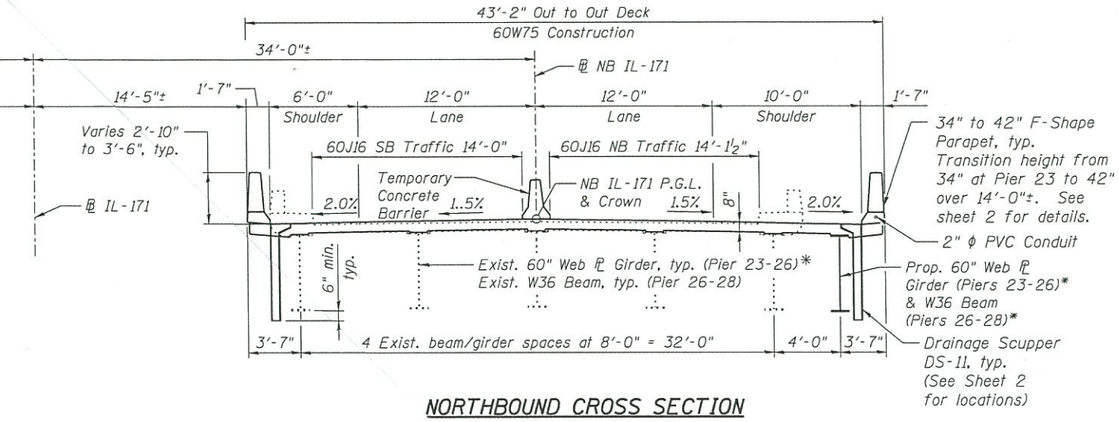

NORTHBOUND CROSS SECTION

(Pier 23 to Pier 28)
Looking Upstation
All dimensions measured perpendicular to ℄ NB IL-171.

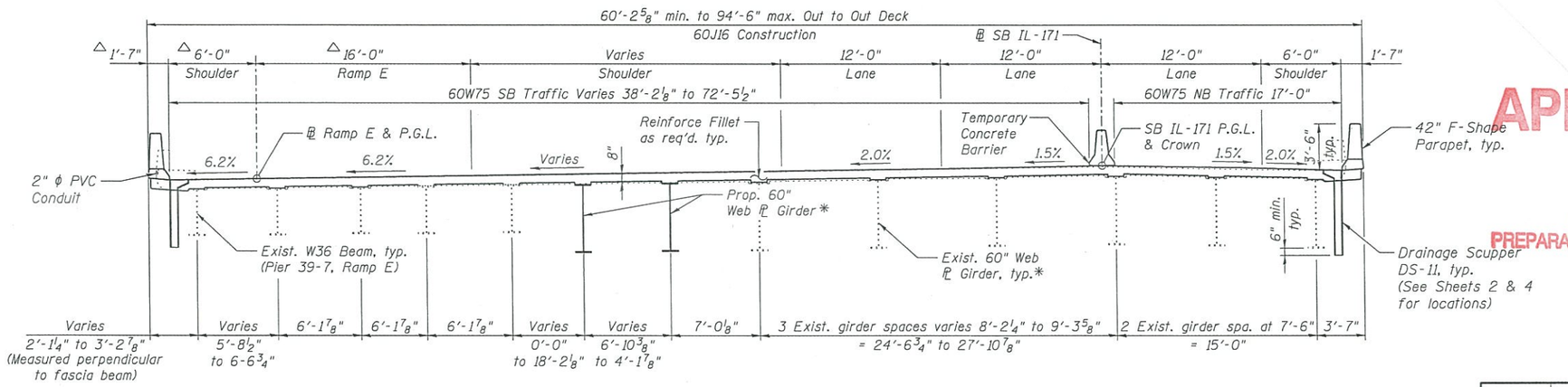

APPROVED
APR 04 2014
AS A BASIS FOR PREPARATION OF DETAILED PLANS

SOUTHBOUND CROSS SECTION

(Pier 6 to Pier 7, Mainline)
(Pier 39 to Pier 7, Ramp E)
Looking Upstation
All dimensions measured perpendicular to ℄ SB IL-171 unless noted otherwise.

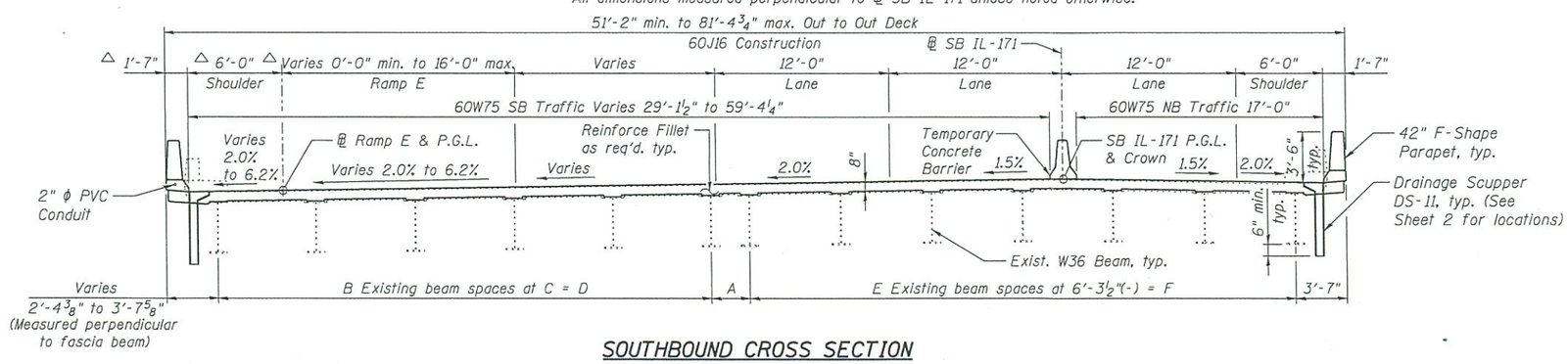

SOUTHBOUND CROSS SECTION

(Pier 7 to Pier 11)
Looking Upstation
All dimensions measured perpendicular to ℄ SB IL-171 unless noted otherwise.

BEAM SPACING FOR SOUTHBOUND CROSS SECTION

	A	B	C	D	E	F
Pier 7N	2'-8"	5	6'-9 3/4"	34'-0 3/4"	6	37'-8 5/8"
Pier 8S	2'-8"	5	4'-0 3/4"(-)	20'-3 1/2"(-)	6	37'-8 5/8"
Pier 8N	0'-0"	3	7'-6 7/8"	22'-8 5/8"	6	37'-8 5/8"
Pier 9S	0'-0"	3	4'-4 3/4"	13'-2 1/4"	6	37'-8 5/8"
Pier 9N	0'-0"	3	6'-5 1/4"	19'-3 3/4"	5	31'-5 1/4"(-)
Pier 10S	0'-0"	3	4'-7"(+)	13'-9 1/4"(-)	5	31'-5 1/4"(-)
Pier 10N	0'-0"	2	6'-10 1/4"(-)	13'-8 3/8"	5	31'-5 1/4"(-)
Pier 11S	0'-0"	0	0'-0"	0'-0"	7	44'-0"(+)

** 60W75 (NB) or 60J16 (SB)

*** 2013-037B-R (NB) or 2013-038B-R (SB)

CROSS SECTIONS
SHEET 1 OF 2
IL-171 OVER DES PLAINES RIVER VALLEY
FAP-372 (NB) - SECTION 2013-037B-R
FAP-372 (SB) - SECTION 2013-038B-R
COOK COUNTY
STATION 58+29.83
STRUCTURE NO. 016-2456 (NB)
STRUCTURE NO. 016-2457 (SB)

benesch engineers · scientists · planners
Alfred Benesch & Company
205 North Michigan Avenue, Suite 2400
Chicago, Illinois 60601
312-565-0450 Job No. 10093

FILE NAME = 01624562457-60J16-TSL-005.dgn	USER NAME = dschriks	DESIGNED - DTS	REVISED -
		CHECKED - AAY	REVISED -
	PLOT SCALE =	DRAWN - KMS	REVISED -
	PLOT DATE = 3/13/2014	CHECKED - AAY/KJN	REVISED -

STATE OF ILLINOIS
DEPARTMENT OF TRANSPORTATION

SHEET NO. 5 OF 9 SHEETS

F.A.P. RTE.	SECTION	COUNTY	TOTAL SHEETS	SHEET NO.
372	***	COOK	9	5
		CONTRACT NO. **		
		ILLINOIS FED. AID PROJECT		

3/13/2014 2:30:21 PM X:\100005\10093\Eng_Docs_Phase_II\SN_016_2456_2457_1st_Ave_over_Des_Plaines_River_Valley\TS&L\01624562457-60J16-TSL-005.dgn

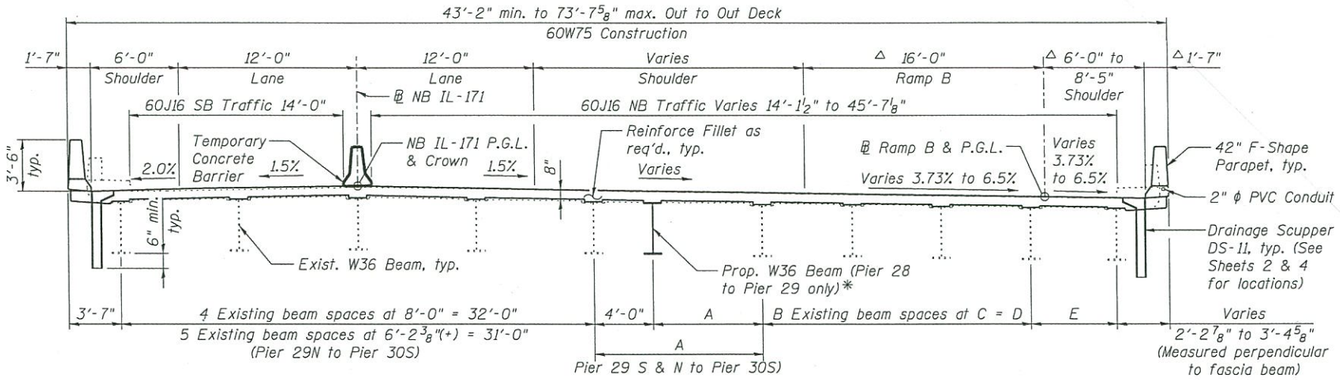

NORTHBOUND CROSS SECTION

(Pier 28 to Pier 30, Mainline)
(Pier 59 to Pier 30, Ramp B)
Looking Upstation
All dimensions measured perpendicular to ℄ NB IL-171 unless noted otherwise.

BEAM SPACING FOR NORTHBOUND CROSS SECTION

	A	B	C	D	E
Pier 59N	—	3	6'-3"(-)	18'-8 7/8"	6'-8 7/8"
Pier 60S	—	3	6'-3"(-)	18'-8 7/8"	5'-8 7/8"(-)
Pier 60N	—	3	6'-0 3/4"(-)	18'-2"(+)	6'-4"
Pier 29S	4'-8 1/2"(-)	3	6'-0 3/4"(-)	18'-2 1/8"(-)	5'-8 1/2"
Pier 29N	8'-4"	3	8'-4"	25'-0"	0'-0"
Pier 30S	4'-5 3/8"(-)	2	8'-4"	16'-8"	4'-5 3/8"(-)

Note: At Pier 30S, dimension "E" is directly right of dimension "A" and is directly to the left of the constant beam spacing "C". See existing plans.

APPROVED
APR 04 2014
AS A BASIS FOR
PREPARATION OF DETAILED PLANS

* Make composite, positive moment areas only.

△ Measured perpendicular to ℄ Ramp B.

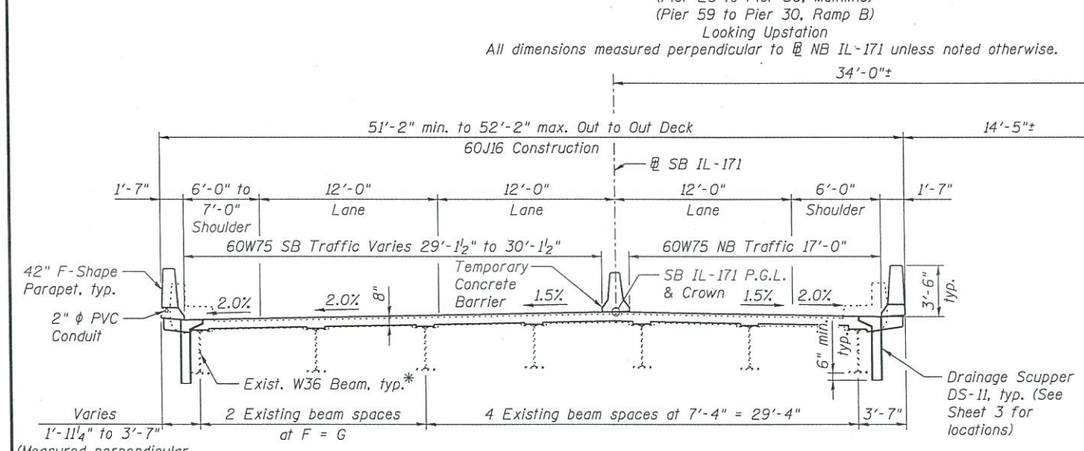

SOUTHBOUND CROSS SECTION

(Pier 11 to Pier 16)
Looking Upstation
All dimensions measured perpendicular to ℄ SB IL-171 unless noted otherwise.

BEAM SPACING FOR SOUTHBOUND CROSS SECTION

	F	G
Pier 11	7'-4"	14'-8"
Existing Field Splice #4	7'-4"	14'-8"
Pier 16	8'-7 5/8"(+)	17'-3 1/4"(+)

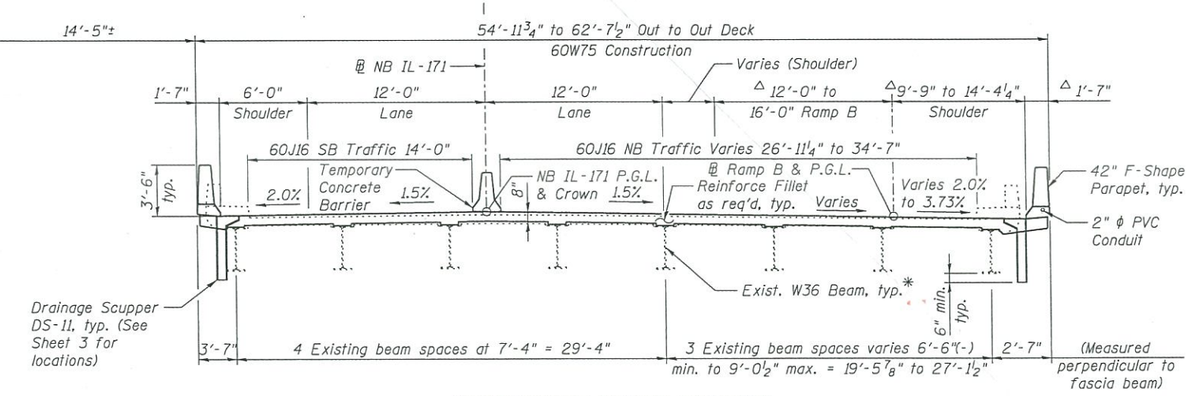

NORTHBOUND CROSS SECTION

(Pier 30 to Pier 35, Mainline)
Looking Upstation
All dimensions measured perpendicular to ℄ NB IL-171 unless noted otherwise.

** 60W75 (NB) or 60J16 (SB)

*** 2013-037B-R (NB) or 2013-038B-R (SB)

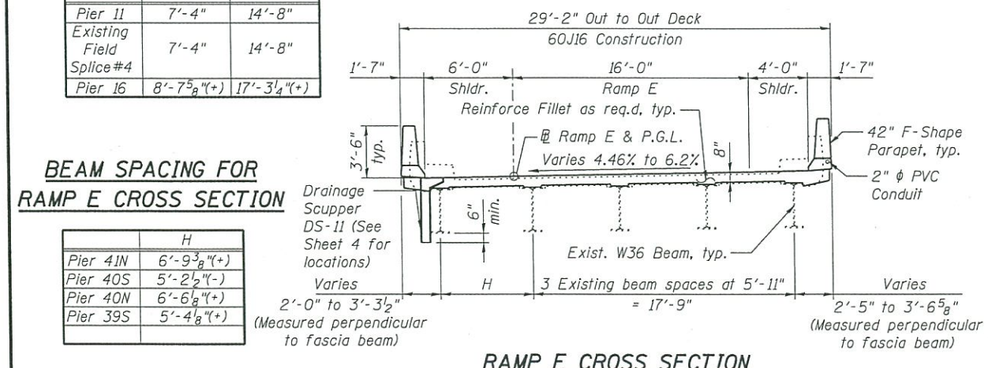

BEAM SPACING FOR RAMP E CROSS SECTION

	H
Pier 41N	6'-9 3/8"(+)
Pier 40S	5'-2 1/2"(-)
Pier 40N	6'-6 1/8"(+)
Pier 39S	5'-4 1/8"(+)

RAMP E CROSS SECTION

(Pier 39 to Pier 41)
Looking Downstation
All dimensions measured radial to ℄ Ramp E unless noted otherwise.

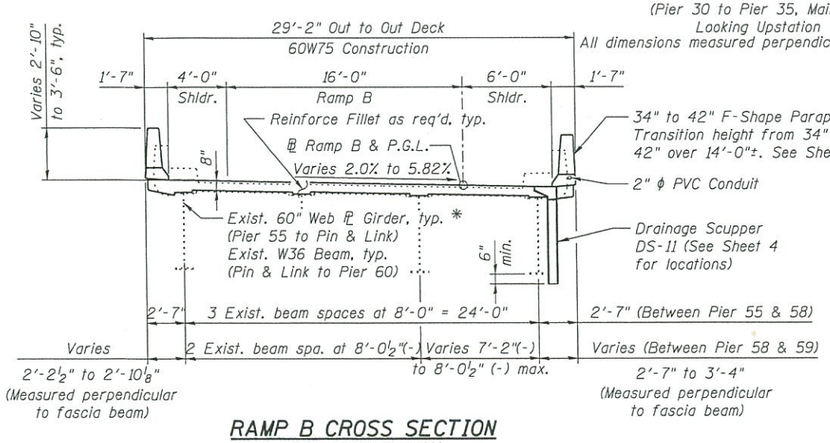

RAMP B CROSS SECTION

(Pier 55 to Pier 59)
Looking Upstation
All dimensions measured radial to ℄ Ramp B unless noted otherwise.

CROSS SECTIONS
SHEET 2 OF 2
IL-171 OVER DES PLAINES RIVER VALLEY
FAP-372 (NB) - SECTION 2013-037B-R
FAP-372 (SB) - SECTION 2013-038B-R
COOK COUNTY
STATION 58+29.83
STRUCTURE NO. 016-2456 (NB)
STRUCTURE NO. 016-2457 (SB)

benesch
engineers · scientists · planners
Alfred Benesch & Company
205 North Michigan Avenue, Suite 2400
Chicago, Illinois 60601
312-565-0450
Job No. 10093

FILE NAME = 01624562457-60J16-TSL-006.dgn	USER NAME = dschriks	DESIGNED - DTS	REVISED -
		CHECKED - AAY	REVISED -
	PLOT SCALE =	DRAWN - KMS	REVISED -
	PLOT DATE = 3/13/2014	CHECKED - AAY/KJN	REVISED -

STATE OF ILLINOIS
DEPARTMENT OF TRANSPORTATION

SHEET NO. 6 OF 9 SHEETS

F.A.P. RTE.	SECTION	COUNTY	TOTAL SHEETS	SHEET NO.
372	***	COOK	9	6
		CONTRACT NO. **		
		ILLINOIS FED. AID PROJECT		

X:\10000S\10093\Eng_Docs_Phase_II\SN_016_2456_2457_1st_Ave_over_Des_Plaines_River_Valley\TS&L\01624562457-60J16-TSL-006.dgn
3/13/2014 2:30:22 PM

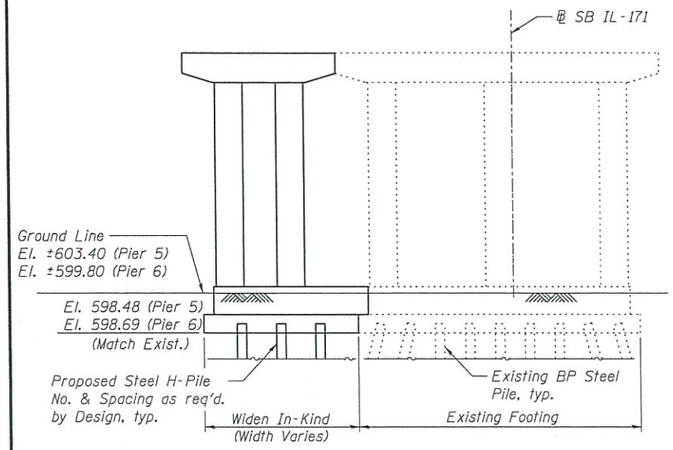

PIER 5 & 6 SKETCH
(Looking Upstation)

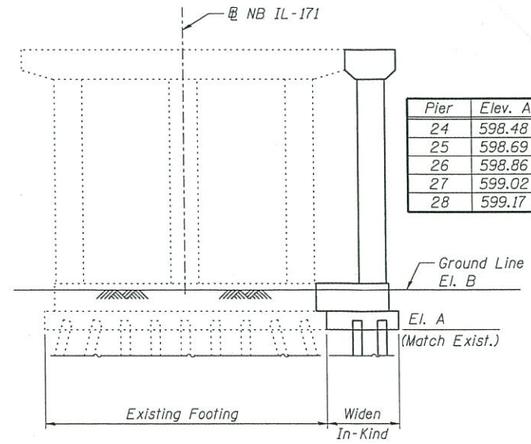

Pier	Elev. A	Elev. B
24	598.48	602.50±
25	598.69	602.50±
26	598.86	603.00±
27	599.02	603.00±
28	599.17	603.10±

PIER 24 THRU 28 SKETCH
(Looking Upstation)

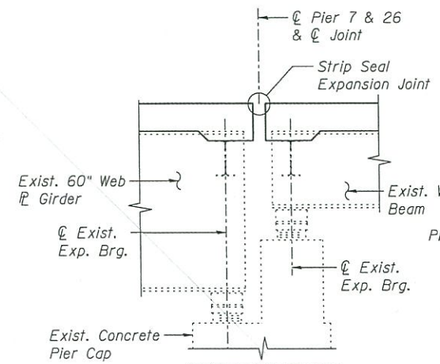

SECTION THRU
PIER 7 (SB) & 26 (NB)
(Looking South)

Note:
See Framing Plan on
sheet 9 of 9 for modified
steel details.

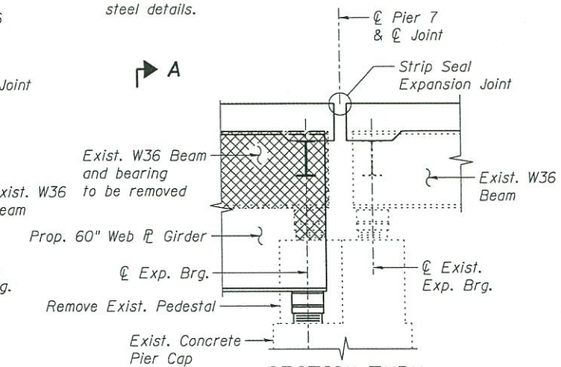

SECTION THRU
PIER 7 AT RAMP E
(Looking South)

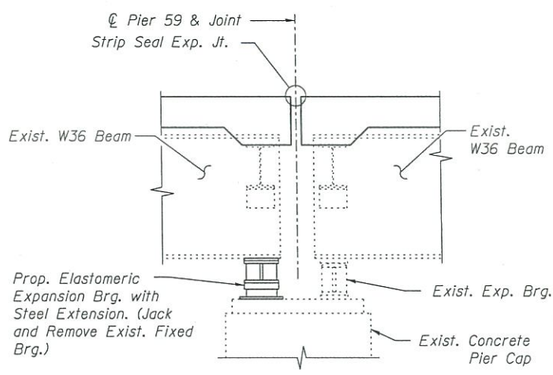

SECTION THRU PIER 59

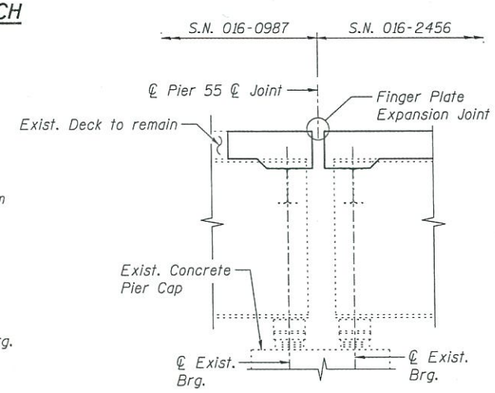

SECTION THRU
PIER 55

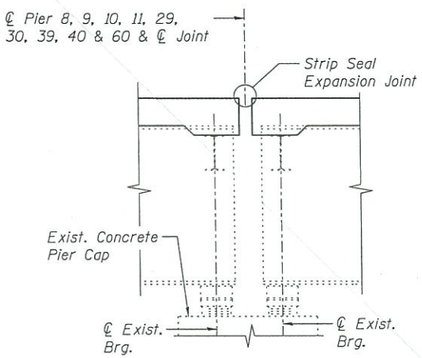

SECTION THRU
PIER 8, 9, 10, 11,
29, 30, 39, 40 & 60

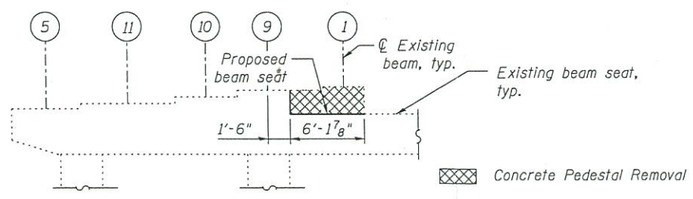

VIEW A-A
(Only South Face of Pier Cap shown for clarity)

APPROVED
APR 04 2014
AS A BASIS FOR
PREPARATION OF DETAILED PLANS

SECTIONS AND DETAILS
SHEET 1 OF 2
IL-171 OVER DES PLAINES RIVER VALLEY
FAP-372 (NB) - SECTION 2013-037B-R
FAP-372 (SB) - SECTION 2013-038B-R
COOK COUNTY
STATION 58+29.83
STRUCTURE NO. 016-2456 (NB)
STRUCTURE NO. 016-2457 (SB)

* 60W75 (NB) or
60J16 (SB)

** 2013-037B-R (NB) or
2013-038B-R (SB)

benesch
engineers · scientists · planners
Alfred Benesch & Company
205 North Michigan Avenue, Suite 2400
Chicago, Illinois 60601
312-565-0450 Job No. 10093

FILE NAME = 01624562457-60J16-TSL-007.dgn	USER NAME = dschriks	DESIGNED - DTS	REVISED -
		CHECKED - AAY	REVISED -
	PLOT SCALE =	DRAWN - KMS	REVISED -
	PLOT DATE = 3/13/2014	CHECKED - AAY/KJN	REVISED -

STATE OF ILLINOIS
DEPARTMENT OF TRANSPORTATION

SHEET NO. 7 OF 9 SHEETS

F.A.P. RTE.	SECTION	COUNTY	TOTAL SHEETS	SHEET NO.
372	**	COOK	9	7
		CONTRACT NO. *		
		ILLINOIS FED. AID PROJECT		

X:\100005\10093\Eng_Docs_Phase_II\SN_016_2456_2457_1st_Ave_over_Des_Plaines_River_Valley\TS&L\01624562457-60J16-TSL-007.dgn
3/13/2014 2:30:24 PM

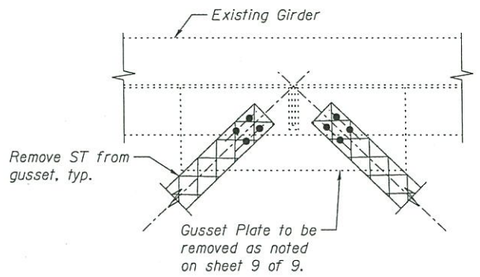

PARTIAL WIND BRACING REMOVAL DETAIL

(14 Locations)

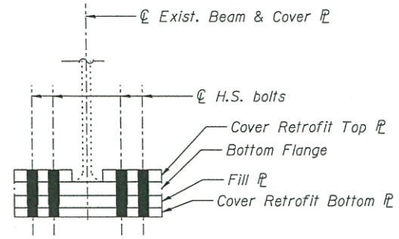

SECTION A-A

(Bottom Cover ℙ Retrofit Shown - Top Cover ℙ Retrofit Similar)

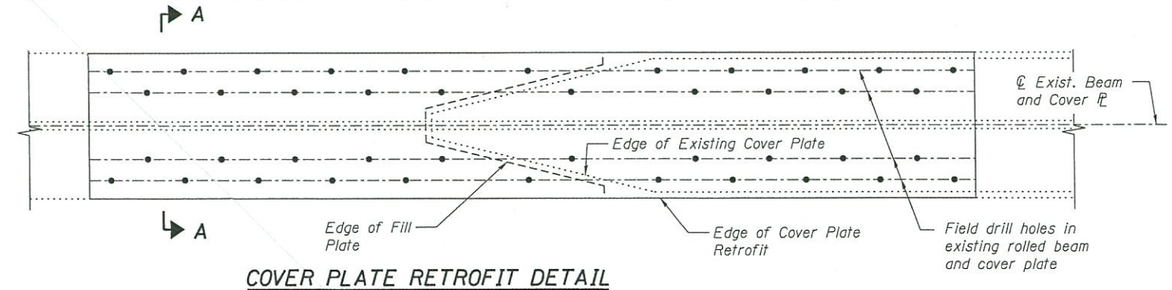

COVER PLATE RETROFIT DETAIL

(422 Locations)

Note: Cover plate retrofit is symmetrical about the ℄ of the existing cover plate.

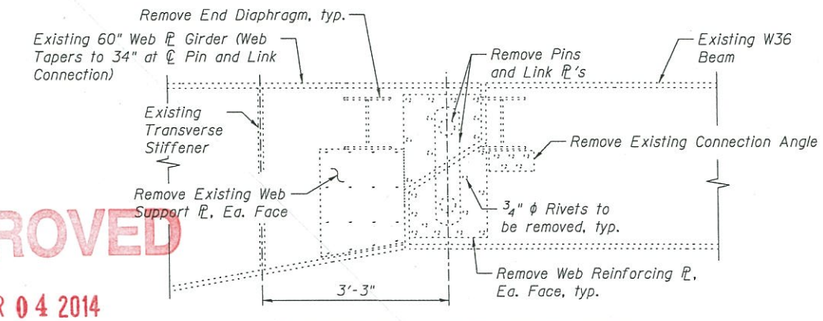

EXISTING PIN & LINK CONNECTION

(Span 4B - Ramp B)

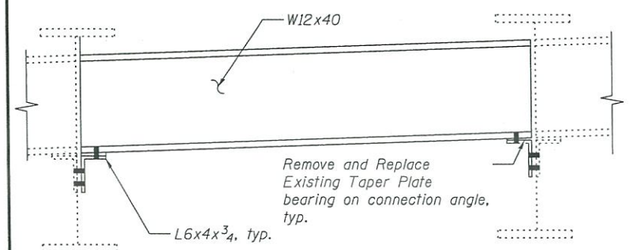

END DIAPHRAGM REPLACEMENT DETAIL

(29 Locations)

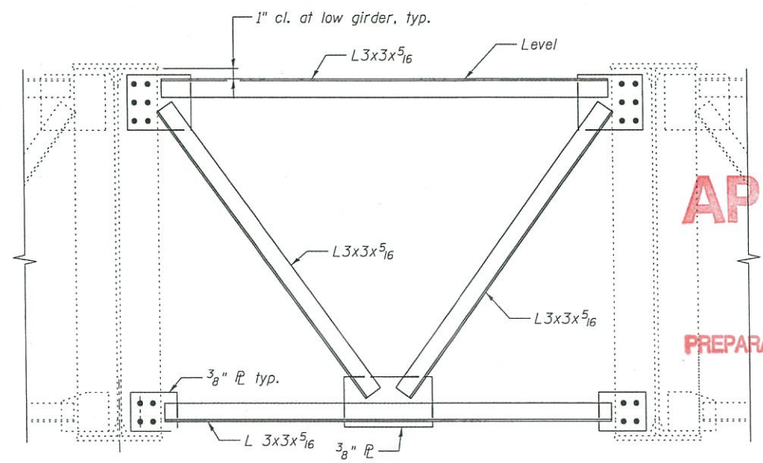

INTERIOR CROSS FRAME REPLACEMENT DETAIL

(2 Locations)

APPROVED
APR 04 2014
AS A BASIS FOR
PREPARATION OF DETAILED PLANS

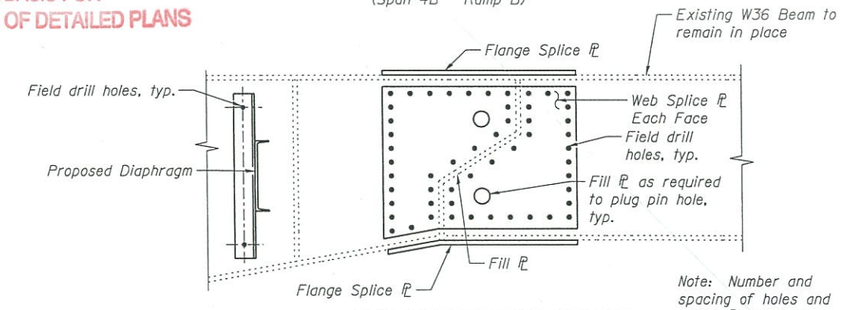

PROPOSED FIELD SPLICE

(Span 4B - Ramp B)

Note: Number and spacing of holes and splice ℙ sizes to be determined during final design.

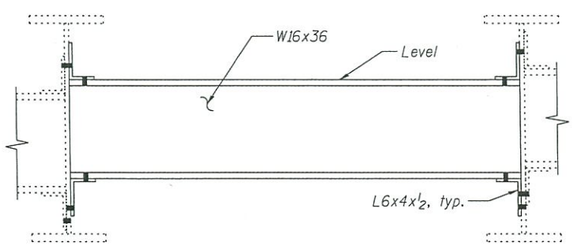

INTERIOR DIAPHRAGM REPLACEMENT DETAIL

(8 Locations)

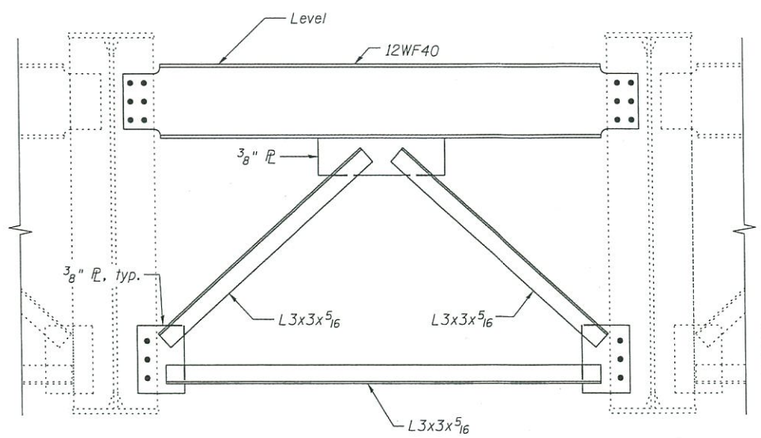

END CROSS FRAME REPLACEMENT DETAIL

(1 Location)

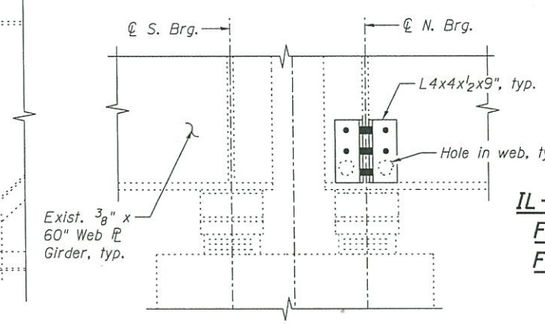

REPAIR DETAIL FOR HOLES IN WEB

(Pier 23 - Exist. West Fascia Girder)

* 60W75 (NB) or 60J16 (SB)

** 2013-037B-R (NB) or 2013-038B-R (SB)

SECTIONS AND DETAILS
SHEET 2 OF 2
IL-171 OVER DES PLAINES RIVER VALLEY
FAP-372 (NB) - SECTION 2013-037B-R
FAP-372 (SB) - SECTION 2013-038B-R
COOK COUNTY
STATION 58+29.83
STRUCTURE NO. 016-2456 (NB)
STRUCTURE NO. 016-2457 (SB)

benesch
engineers · scientists · planners
Alfred Benesch & Company
205 North Michigan Avenue, Suite 2400
Chicago, Illinois 60601
312-565-0450 Job No. 10093

FILE NAME = 016245624 57-60J16-TSL-008.dgn	USER NAME = dschriks	DESIGNED - DTS	REVISED -
		CHECKED - AAY	REVISED -
	PLOT SCALE =	DRAWN - KMS	REVISED -
	PLOT DATE = 3/13/2014	CHECKED - AAY/KJN	REVISED -

STATE OF ILLINOIS
DEPARTMENT OF TRANSPORTATION

SHEET NO. 8 OF 9 SHEETS

F.A.P. RTE.	SECTION	COUNTY	TOTAL SHEETS	SHEET NO.
372	**	COOK	9	8
		CONTRACT NO. *		
		ILLINOIS FED. AID PROJECT		

X:\10000S\10093\Eng_Docs_Phase_II\SN_016_2456_2457_1st_Ave_over_Des_Plaines_River_Valley\TS&L\016245624 57-60J16-TSL-008.dgn
3/13/2014 2:33:00 PM

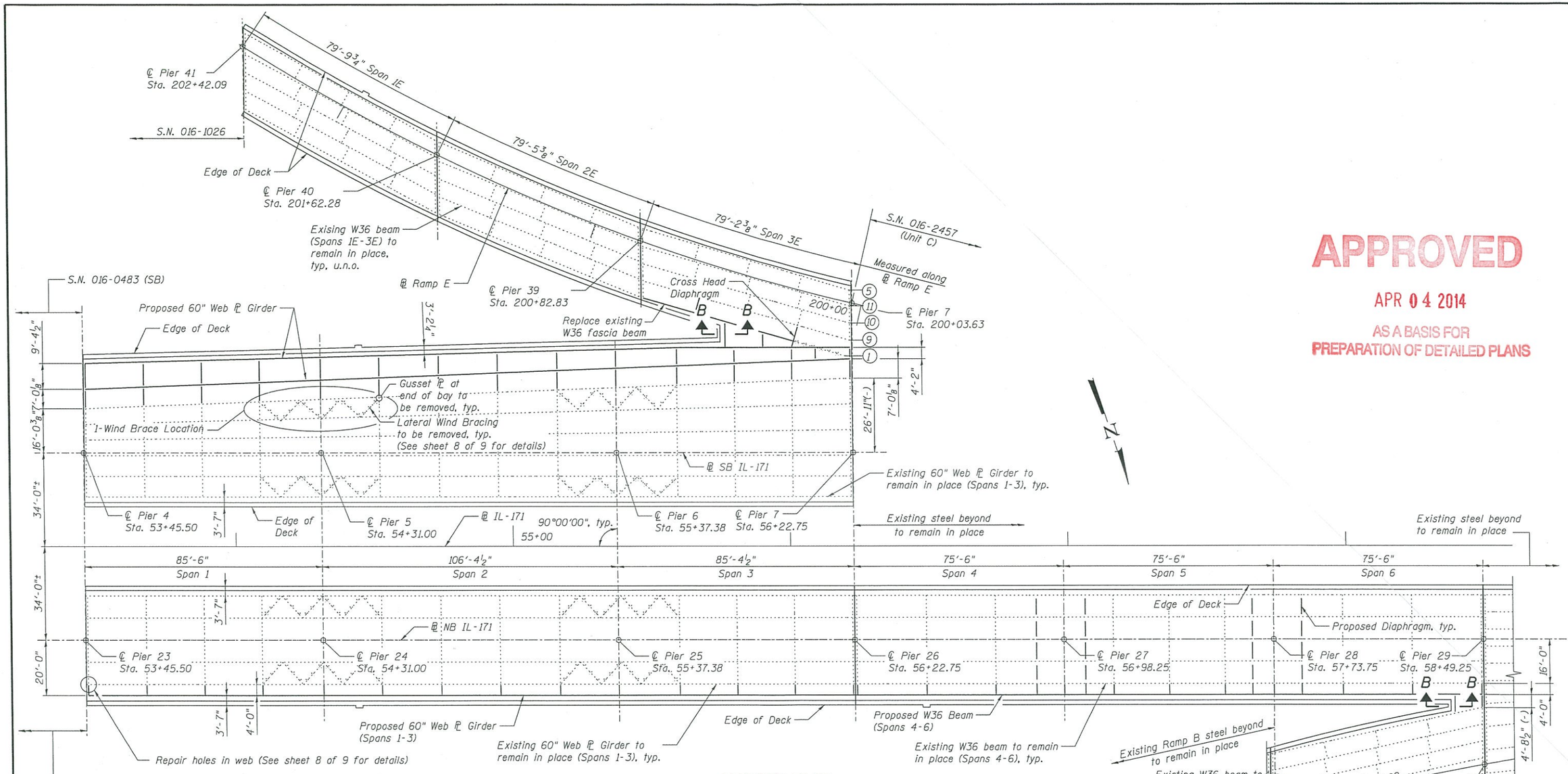

FRAMING PLAN

APPROVED

APR 04 2014

AS A BASIS FOR PREPARATION OF DETAILED PLANS

Note:
Cope top flange of diaphgram to avoid top flange of W36 beam.

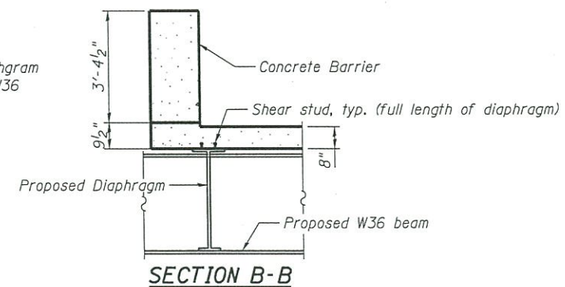

SECTION B-B

FRAMING PLAN
IL-171 OVER DES PLAINES RIVER VALLEY
FAP 372 (NB) - SECTION 2013-037B-R
FAP 372 (SB) - SECTION 2013-038B-R
COOK COUNTY
STATION 58+29.83
STRUCTURE NO. 016-2456 (NB)
STRUCTURE NO. 016-2457 (SB)

* 60W75 (NB) or 60J16 (SB)

** 2013-037B-R (NB) or 2013-038B-R (SB)

benesch
engineers · scientists · planners
Alfred Benesch & Company
205 North Michigan Avenue, Suite 2400
Chicago, Illinois 60601
312-565-0450 Job No. 10093

FILE NAME = 01624562457-60J16-TSL-009.dgn	USER NAME = dschriks	DESIGNED - DTS	REVISED -
		CHECKED - AAY	REVISED -
	PLOT SCALE =	DRAWN - KMS	REVISED -
	PLOT DATE = 3/13/2014	CHECKED - AAY/KJN	REVISED -

STATE OF ILLINOIS
DEPARTMENT OF TRANSPORTATION

SHEET NO. 9 OF 9 SHEETS

F.A.P. RTE.	SECTION	COUNTY	TOTAL SHEETS	SHEET NO.
372	**	COOK	9	9
		CONTRACT NO. *		
		ILLINOIS FED. AID PROJECT		

X:\100009S\10093\Eng_Docs_Phase_II\SN_016_2456_2457_1st_Ave_over_Des_Plaines_River_Valley\TS&L\01624562457-60J16-TSL-009.dgn 2:30:29 PM 3/13/2014