Bench Mark: BM #47 Set at a cross cut on northwest bolt of railroad signal on east side of Norfolk & Western Railroad. Elev. 696.61. ±75' south of US 6 (159th Street) and ±1500' east of 108th Avenue;
BM #48 Set at a notch cut on top of northwest wingwall of bridge US 6 over Marley Creek. Elev. 686.47.

Existing Structure: S.N. D016-D010. Built in 1937 as S.B.I. Route 53, Section 537-R at Station 377+53. Structure consists of 20-spans - four 5-span continuous reinforced concrete slab units supported on timber piles. Each unit has a width of 20'-0" and a length of 112'-6". The overall length of the structure is 450'-0". Structure to be removed and replaced using stage construction.

No Salvage

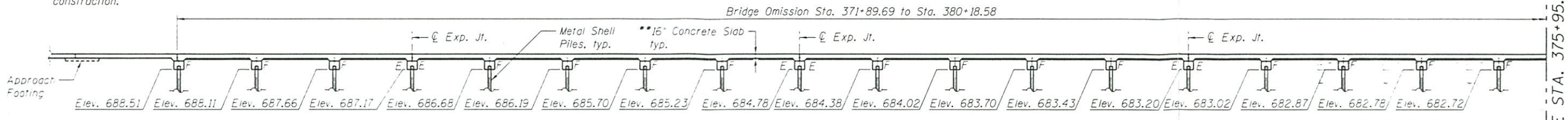

** Subject to refinement during the Design Phase
*** The bottom of pier elevations are subject to refinement during the Design Phase.

APPROVED
JUL 30 2013
AS A BASIS FOR PREPARATION OF DETAILED PLANS

ELEVATION
Proposed Dry Land Bridge 1 WB

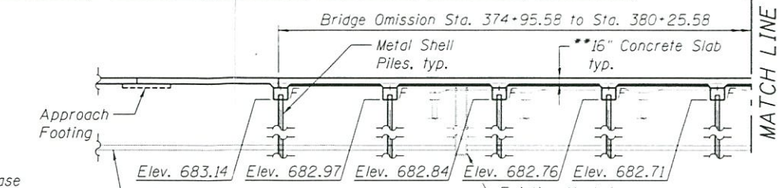

** Subject to refinement during the Design Phase
*** The bottom of pier elevations are subject to refinement during the Design Phase.

ELEVATION
Proposed Dry Land Bridge 1 EB

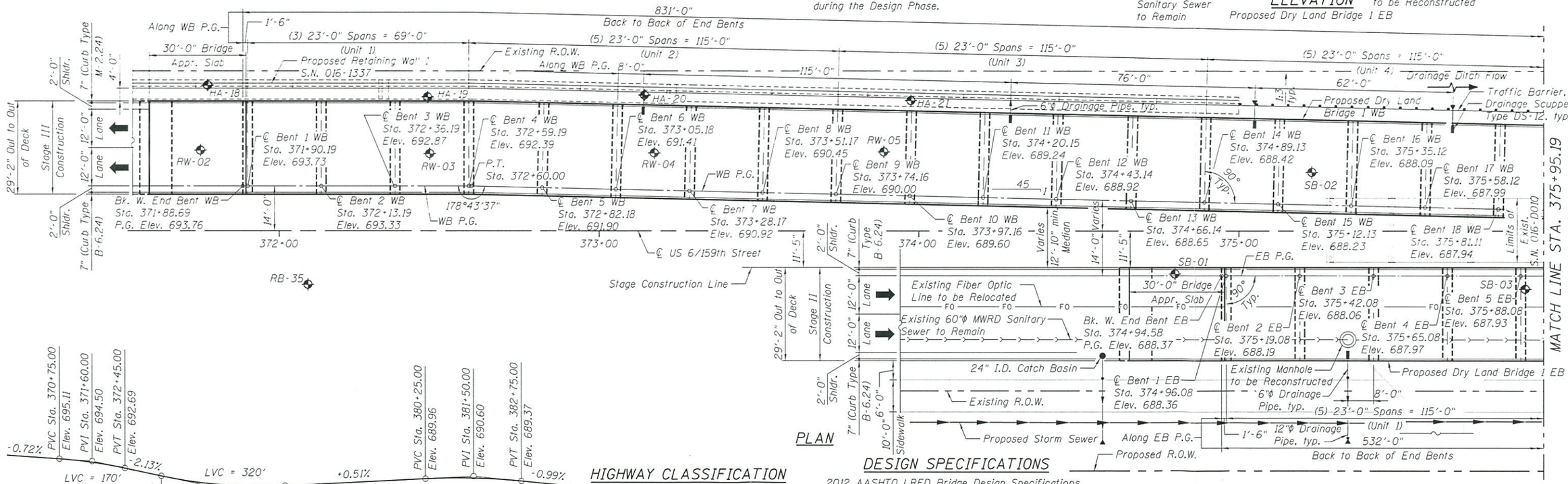

PLAN

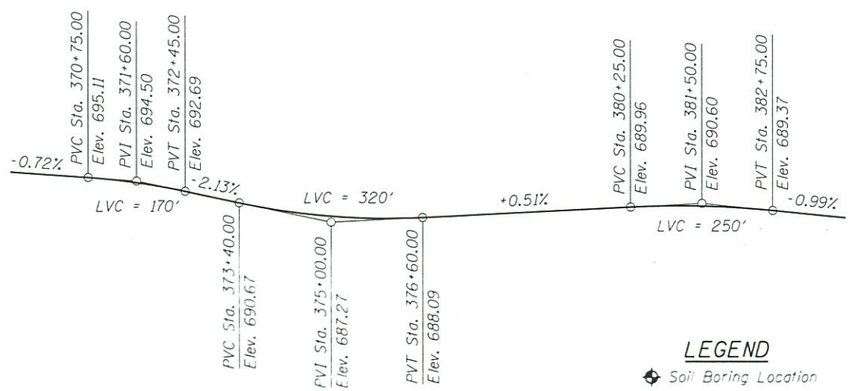

US 6/159TH ST. (WB & EB) PROFILE GRADE

LEGEND
Soil Boring Location

HIGHWAY CLASSIFICATION
F.A.P. Rte. 351 - US 6/159th Street
Functional Class: Other Principal Arterial
ADT: 20,300 (2010); 31,000 (2030)
DHV: 2,665 (2030)
ADTT: 5.33%
Design Speed: 45 m.p.h.
Posted Speed: 45 m.p.h.
2-Way Traffic
Directional Distribution: (55:45) (EB:WB)

LOADING HL-93
Allow 50#/sq. ft. for future wearing surface.

DESIGN SPECIFICATIONS
2012 AASHTO LRFD Bridge Design Specifications, 6th Edition, with 2012 Interims

DESIGN STRESSES
FIELD UNITS
f'c = 3,500 psi
fy = 60,000 psi (Reinforcement)
fy = 50,000 psi (M270 Grade 50)

SEISMIC DATA
Seismic Performance Zone (SPZ) = 1
Design Spectral Acceleration at 1.0 sec. (S_{D1}) = 0.130g
Design Spectral Acceleration at 0.2 sec. (S_{DS}) = 0.238g
Soil Site Class = E

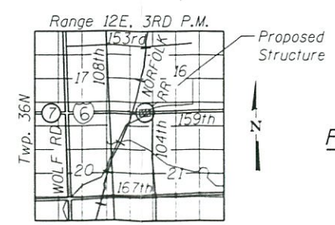

LOCATION SKETCH

GENERAL PLAN & ELEVATION
DRY LAND BRIDGE 1
US ROUTE 6 / 159TH STREET
F.A.P. RTE 351 - SEC. 2010-081-R
COOK COUNTY
STATION 376+05.00
STRUCTURE NO. 016-D010

T:\5106-US6\Structure\dgn\5106_TSL Dry Land Bridge 1.1.dgn

LOCHNER H.W. LOCHNER, INC. 20 N. WACKER DRIVE, SUITE 1200 CHICAGO, ILLINOIS 60606	USER NAME =	DESIGNED - LJB	REVISED
	FILE NAME = 5106_TSL Dry Land Bridge 1.1.dgn	CHECKED - RH	REVISED
	PLOT SCALE =	DRAWN - LJB	REVISED
	PLOT DATE =	CHECKED - MAF	REVISED

STATE OF ILLINOIS
DEPARTMENT OF TRANSPORTATION

SHEET NO. 1 OF 4 SHEETS

F.A.P. RTE.	SECTION	COUNTY	TOTAL SHEETS	SHEET NO.
351	2010-081-R	COOK		
		CONTRACT NO. 60L72		
		ILLINOIS FED. AID PROJECT		

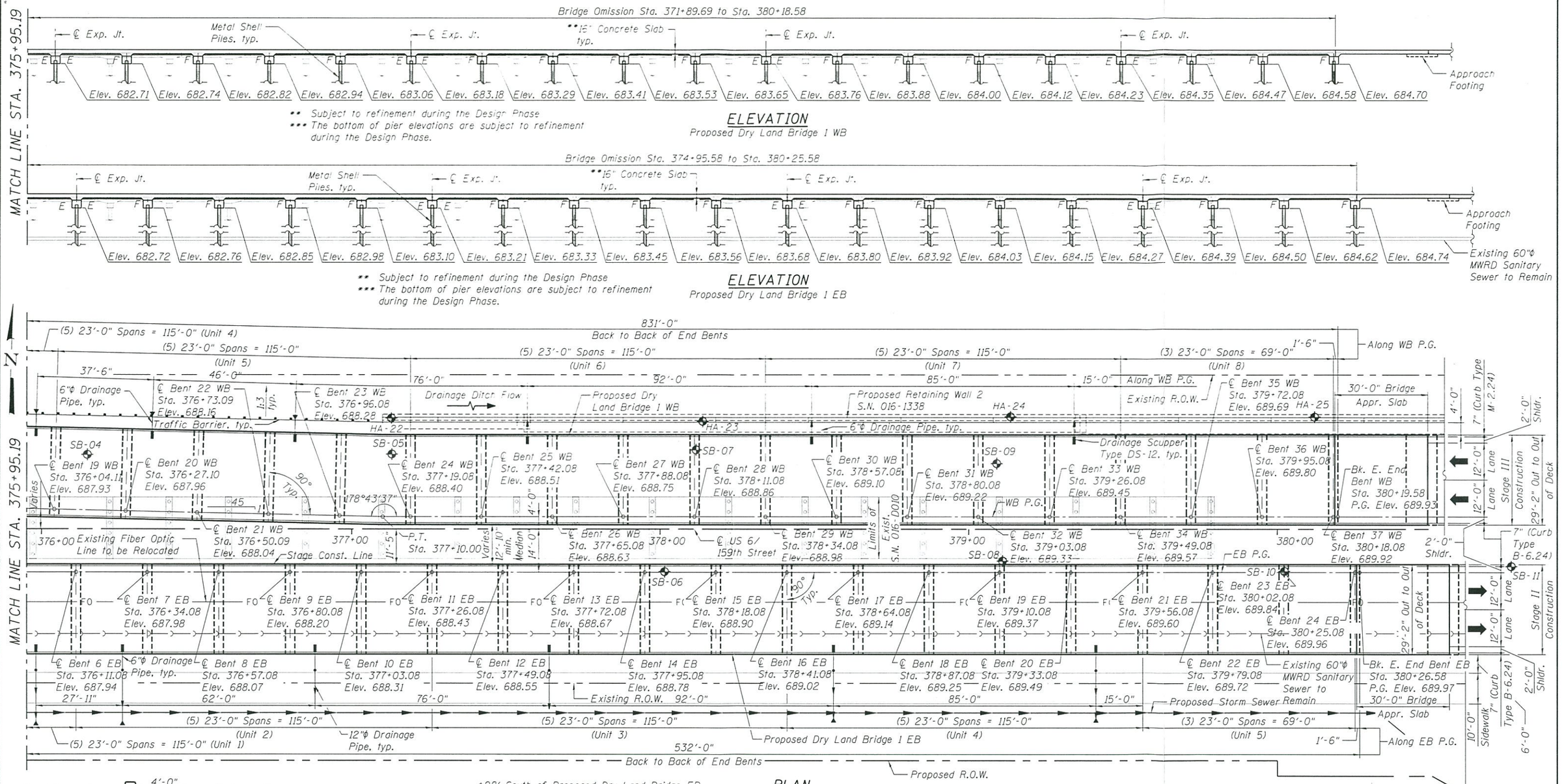

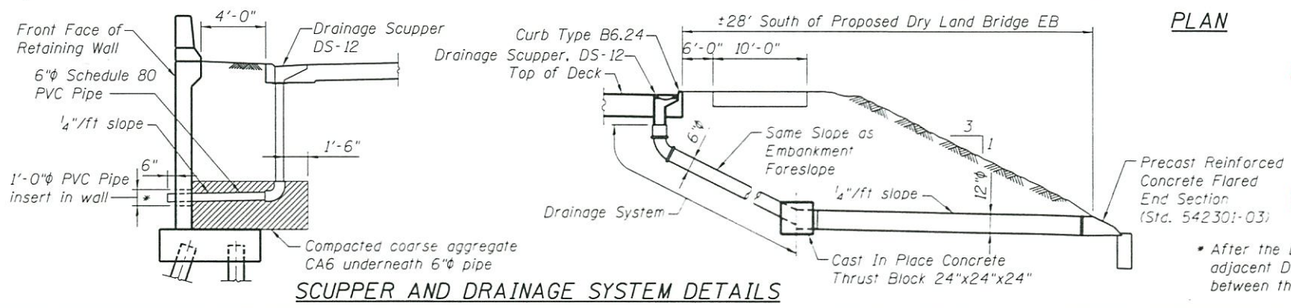

APPROVED

JUL 30 2013

AS A BASIS FOR PREPARATION OF DETAILED PLANS

LEGEND

Soil Boring Location

* After the DS-12 drainage scupper has been installed and the adjacent Dry Land Bridge constructed, concrete shall be placed between the 1'-0"Φ PVC pipe insert and the 6"Φ drain pipe.

GENERAL PLAN & ELEVATION
DRY LAND BRIDGE 1
US ROUTE 6 / 159TH STREET
F.A.P. RTE 351 - SEC. 2010-081-R
COOK COUNTY
STATION 376+05.00
STRUCTURE NO. 016-D010

T:\5106-US6\Structure\dgn\5106.TSL Dry Land Bridge 1.2.dgn

LOCHNER H.W. LOCHNER, INC. 20 N. WACKER DRIVE, SUITE 1200 CHICAGO, ILLINOIS 60606	USER NAME =	DESIGNED - LJB	REVISED
	FILE NAME = 5106.TSL Dry Land Bridge 1.2.dgn	CHECKED - RH	REVISED
	PLOT SCALE =	DRAWN - LJB	REVISED
	PLOT DATE =	CHECKED - MAF	REVISED

STATE OF ILLINOIS
DEPARTMENT OF TRANSPORTATION

SHEET NO. 2 OF 4 SHEETS

F.A.P. RTE.	SECTION	COUNTY	TOTAL SHEETS	SHEET NO.
351	2010-081-R	COOK		
		CONTRACT NO. 60L72		
		ILLINOIS FED. AID PROJECT		

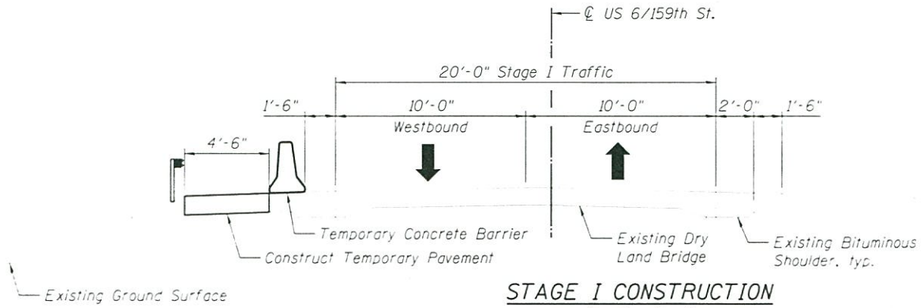

STAGE I CONSTRUCTION

(Looking East)

* Subject to Refinement during the Design Phase

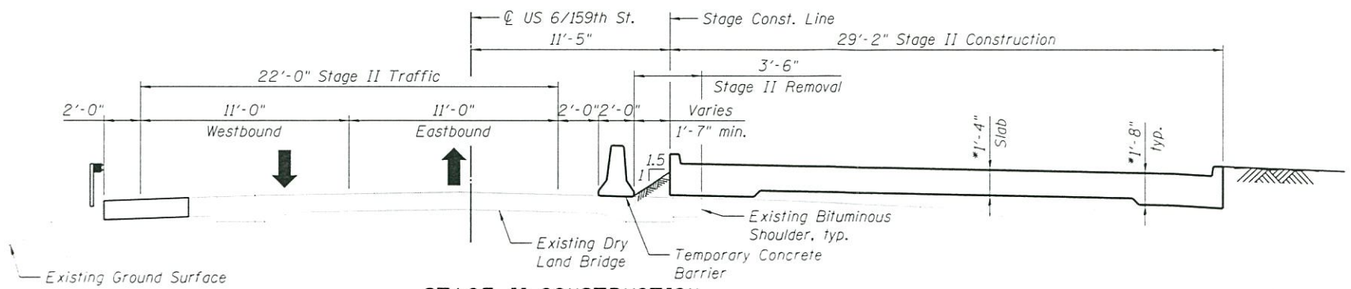

STAGE II CONSTRUCTION

(Looking East)

* Subject to Refinement during the Design Phase

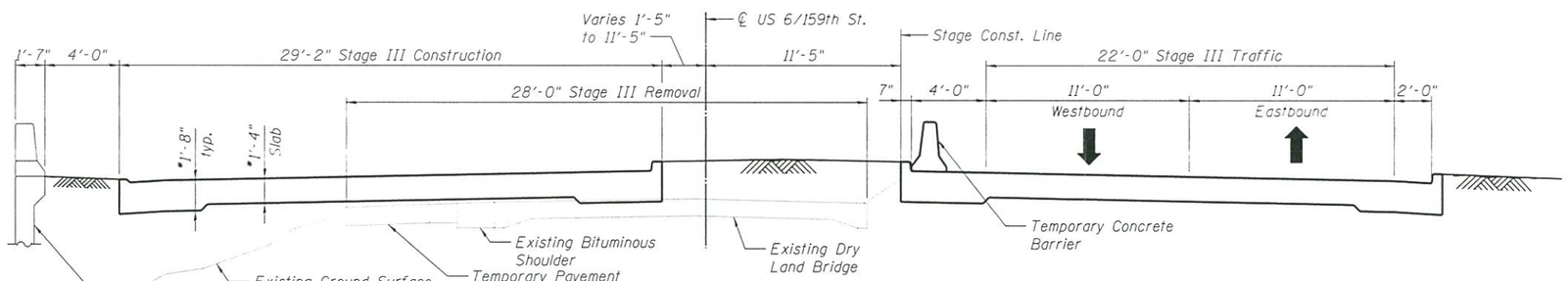

STAGE III CONSTRUCTION

(Looking East)

* Subject to Refinement during the Design Phase

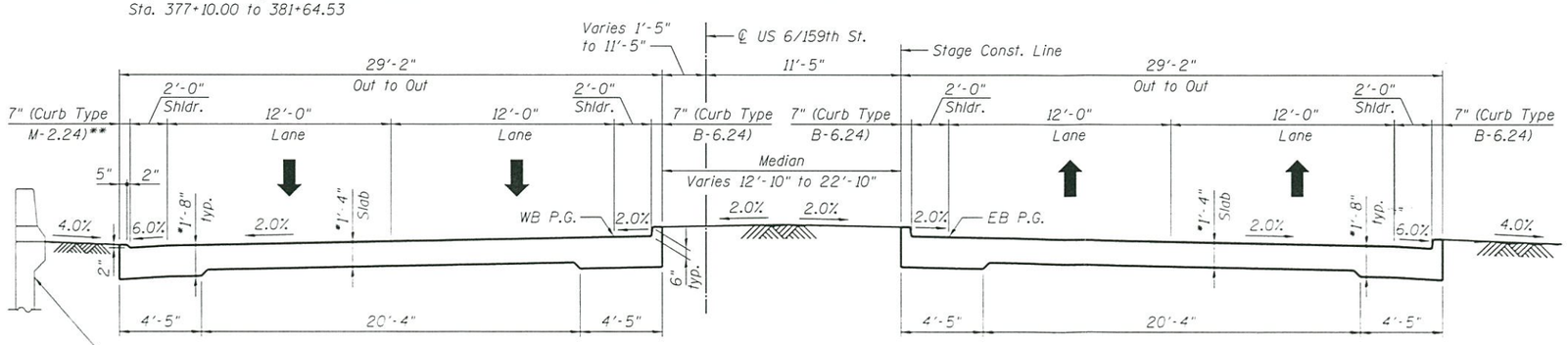

CROSS SECTION

(Looking East)

* Subject to Refinement during the Design Phase

** B-6.24 Curb Section required at North Edge of the Westbound structure between Sta. 375+00.00 and Sta. 377+10.00

APPROVED

JUL 30 2013

AS A BASIS FOR PREPARATION OF DETAILED PLANS

SECTIONS AND DETAILS
DRY LAND BRIDGE 1
US ROUTE 6 / 159TH STREET
F.A.P. RTE 351 - SEC. 2010-081-R
COOK COUNTY
STATION 376+05.00
STRUCTURE NO. 016-D010

T:\5106-US6\Structure\dgn\5106.TSL Dry Land Bridge 1.3dgn

LOCHNER H.W. LOCHNER, INC. 20 N. WACKER DRIVE, SUITE 1200 CHICAGO, ILLINOIS 60606	USER NAME =	DESIGNED - LJB	REVISED
	FILE NAME = 5106.TSL Dry Land Bridge 1.3dgn	CHECKED - RH	REVISED
	PLOT SCALE =	DRAWN - LJB	REVISED
	PLOT DATE =	CHECKED - MAF	REVISED

STATE OF ILLINOIS
DEPARTMENT OF TRANSPORTATION

SHEET NO. 3 OF 4 SHEETS

F.A.P. RTE.	SECTION	COUNTY	TOTAL SHEETS	SHEET NO.
351	2010-081-R	COOK		

CONTRACT NO. 60L72

ILLINOIS FED. AID PROJECT

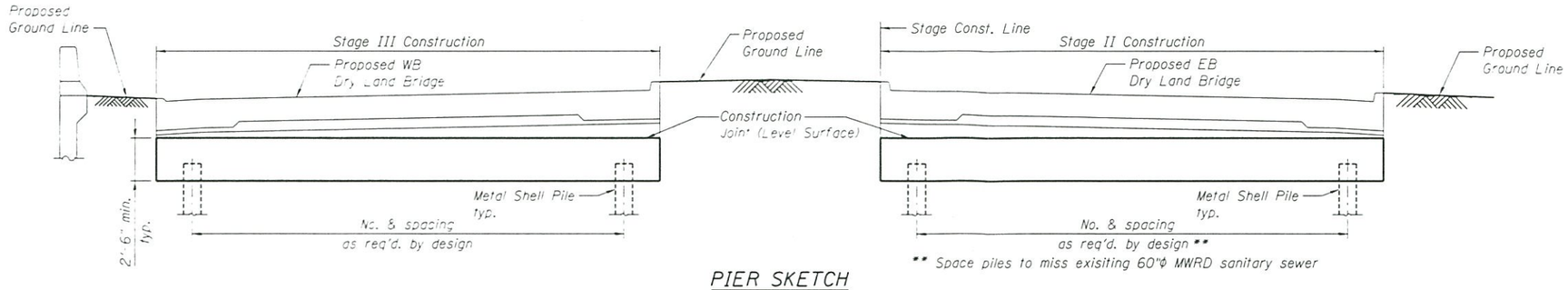

PIER SKETCH
(Looking East)

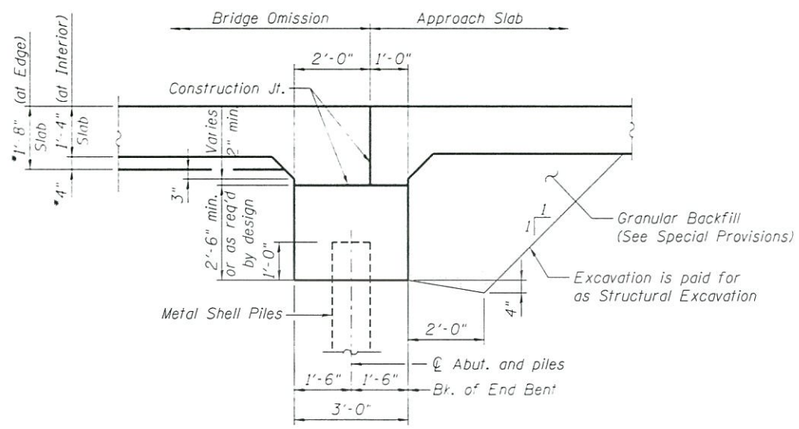

END PILE BENT CAP SECTION
* Subject to Refinement during the Design Phase

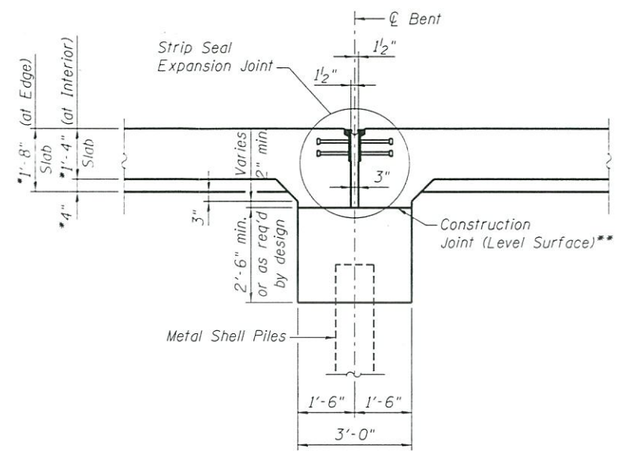

INTERIOR EXPANSION PILE BENT CAP SECTION
* Subject to Refinement during the Design Phase
** Top concrete surface of the expansion pier caps shall be finished to a very smooth finish. ⅛" neoprene sheet shall be placed on the entire top surface of the expansion pier caps prior to pouring the superstructure slab.

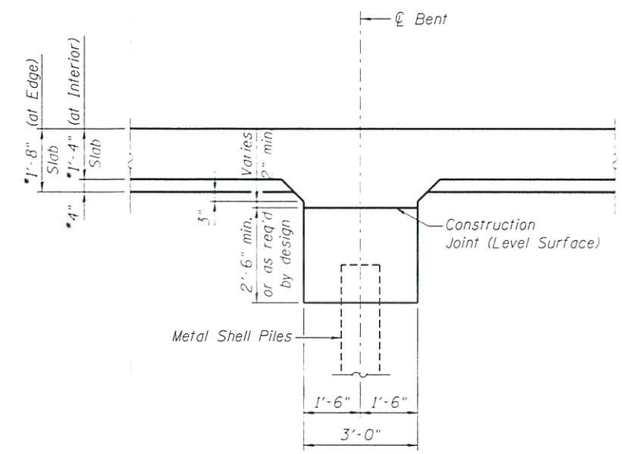

INTERIOR FIXED PILE BENT CAP SECTION
* Subject to Refinement during the Design Phase

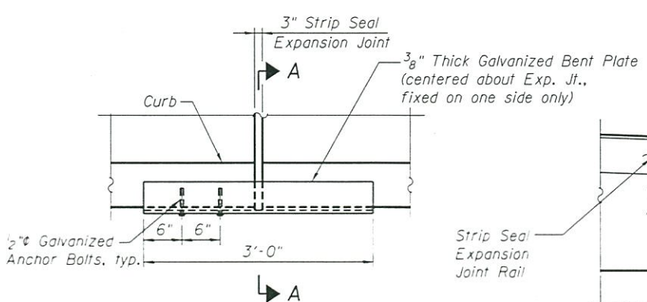

PLAN
Typical at each end of Expansion Joints

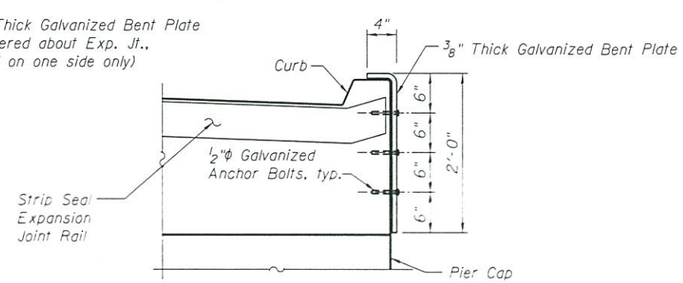

SECTION A-A

APPROVED

JUL 30 2013

AS A BASIS FOR PREPARATION OF DETAILED PLANS

SECTIONS AND DETAILS
DRY LAND BRIDGE 1
US ROUTE 6 / 159TH STREET
F.A.P. RTE 351 - SEC. 2010-081-R
COOK COUNTY
STATION 376+05.00
STRUCTURE NO. 016-D010

$FILE$

LOCHNER	USER NAME =	DESIGNED - LJB	REVISED	STATE OF ILLINOIS DEPARTMENT OF TRANSPORTATION		F.A.P. RTE.	SECTION	COUNTY	TOTAL SHEETS	SHEET NO.
H. W. LOCHNER, INC. 225 WEST WASHINGTON STREET 12 TH FLOOR CHICAGO, ILLINOIS 60606	FILE NAME = $FILES$	CHECKED - RH	REVISED			351	2010-081-R	COOK		
	PLOT SCALE =	DRAWN - LJB	REVISED					CONTRACT NO. 60L72		
	PLOT DATE =	CHECKED - MAF	REVISED		SHEET NO. 4 OF 4 SHEETS			ILLINOIS FED. AID PROJECT		