Bench Mark: BM #49 Set at a notch cut on south end of east 16' headwall to private entrance. Elev. 687.61. 37' north of ℄ US 6 and ±1000' east of 104th Street; BM #50 Set at a notch cut in center of west 16' headwall to private entrance. Elev. 686.54. 52' north of ℄ US 6 and ±2400' east of 104th Street.

Existing Structure: S.N. D016-D012. Built in 1937 as S.B.I. Route 53, Section 537-R at Station 398+92.60. Structure consists of 20-spans - four 5-span continuous reinforced concrete slab units supported on timber piles. Each unit has a width of 20'-0" and a length of 115'-0". The overall length of the structure is 460'-0". Structure to be removed and replaced using stage construction.

No Salvage

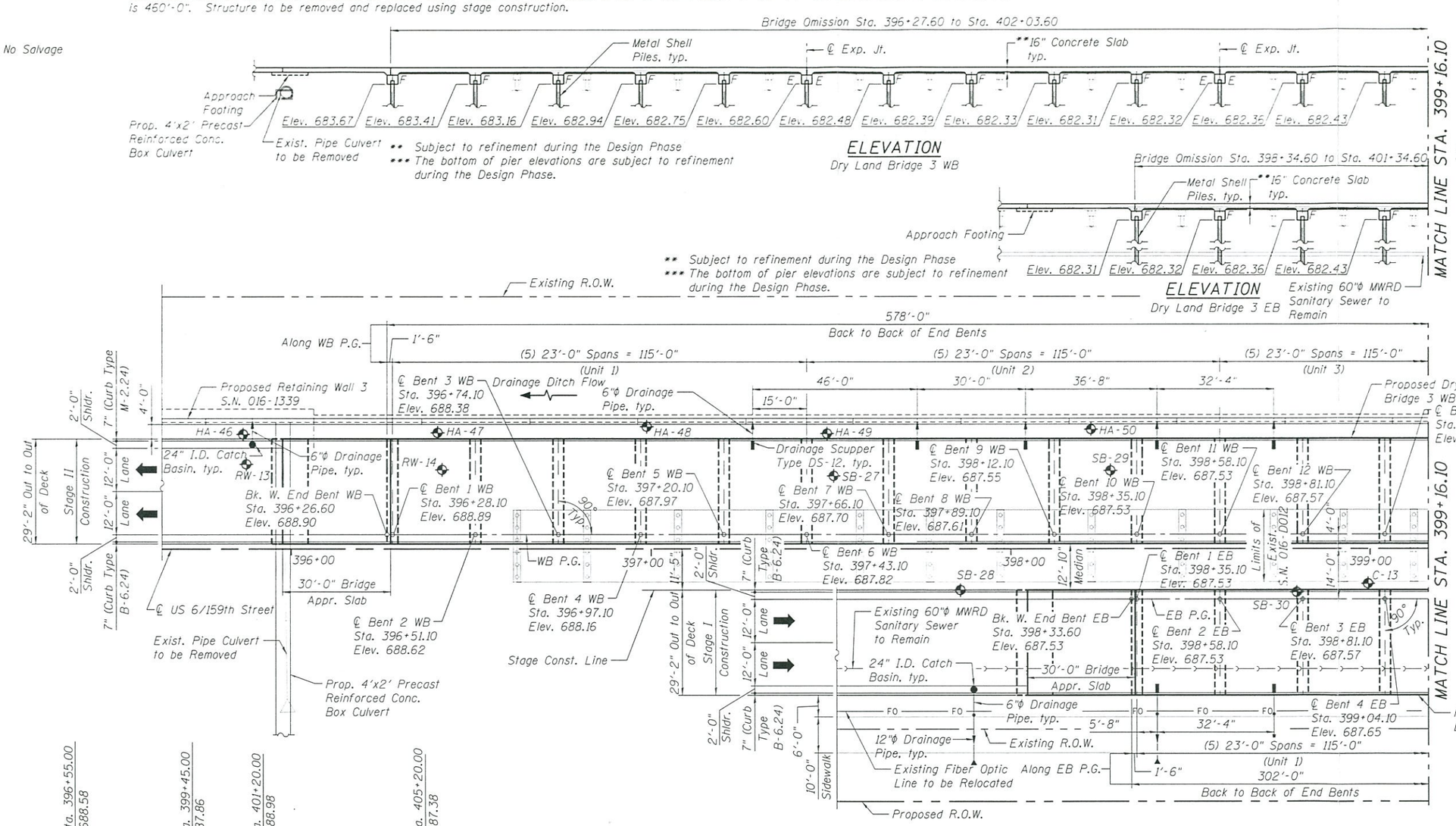

PLAN

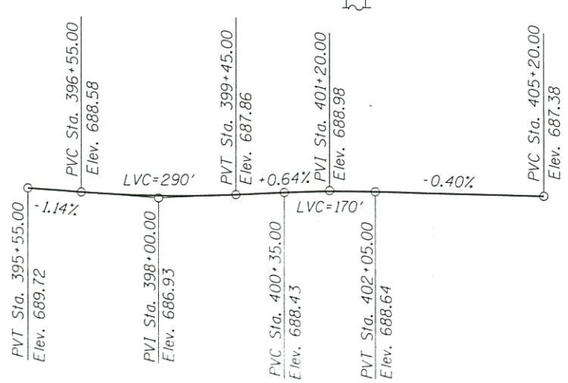

US 6/159TH ST. (WB & EB) PROFILE GRADE

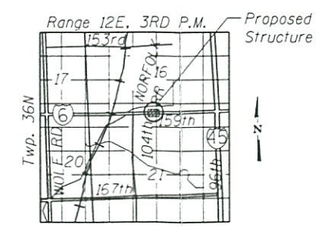

LOCATION SKETCH

HIGHWAY CLASSIFICATION

F.A.P. Rte. 351 (US 6) 159th Street
Functional Class: Other Principal Arterial
ADT: 22,100 (2010); 33,000 (2030)
DHV: 3,065 (2030)
ADTT: 5.21%
Design Speed: 45 m.p.h.
Posted Speed: 45 m.p.h.
2-Way Traffic
Directional Distribution: (55:45) (EB:WB)

SEISMIC DATA

Seismic Performance Zone (SPZ) = 1
Design Spectral Acceleration at 1.0 sec. (S_{D1}) = 0.130g
Design Spectral Acceleration at 0.2 sec. (S_{DS}) = 0.238g
Soil Site Class = E

LOADING HL-93

Allow 50#/sq. ft. for future wearing surface.

DESIGN SPECIFICATIONS

2012 AASHTO LRFD Bridge Design Specifications, 6th Edition, with 2012 Interims

DESIGN STRESSES

FIELD UNITS

f'c = 3,500 psi
fy = 60,000 psi (Reinforcement)
fy = 50,000 psi (M270 Grade 50)

LEGEND

Soil Boring Location

APPROVED
JUL 30 2013
AS A BASIS FOR PREPARATION OF DETAILED PLANS

GENERAL PLAN & ELEVATION
DRY LAND BRIDGE 3
US ROUTE 6 / 159TH STREET
F.A.P. RTE 351 - SEC. 2010-081-R
COOK COUNTY
STATION 399+15.00
STRUCTURE NO. 016-D012

T:\5106-US6\Structure\dgn\5106_TSL Dry Land Bridge 3.1.dgn

LOCHNER H.W. LOCHNER, INC. 20 N. WACKER DRIVE, SUITE 1200 CHICAGO, ILLINOIS 60606	USER NAME =	DESIGNED - LJB	REVISED
	FILE NAME = 5106_TSL Dry Land Bridge 3.1.dgn	CHECKED - RH	REVISED
	PLOT SCALE =	DRAWN - LJB	REVISED
	PLOT DATE =	CHECKED - MAF	REVISED

STATE OF ILLINOIS
DEPARTMENT OF TRANSPORTATION

SHEET NO. 1 OF 4 SHEETS

F.A.P. RTE.	SECTION	COUNTY	TOTAL SHEETS	SHEET NO.
351	2010-081-R	COOK		
		CONTRACT NO. 60L72		
		ILLINOIS FED. AID PROJECT		

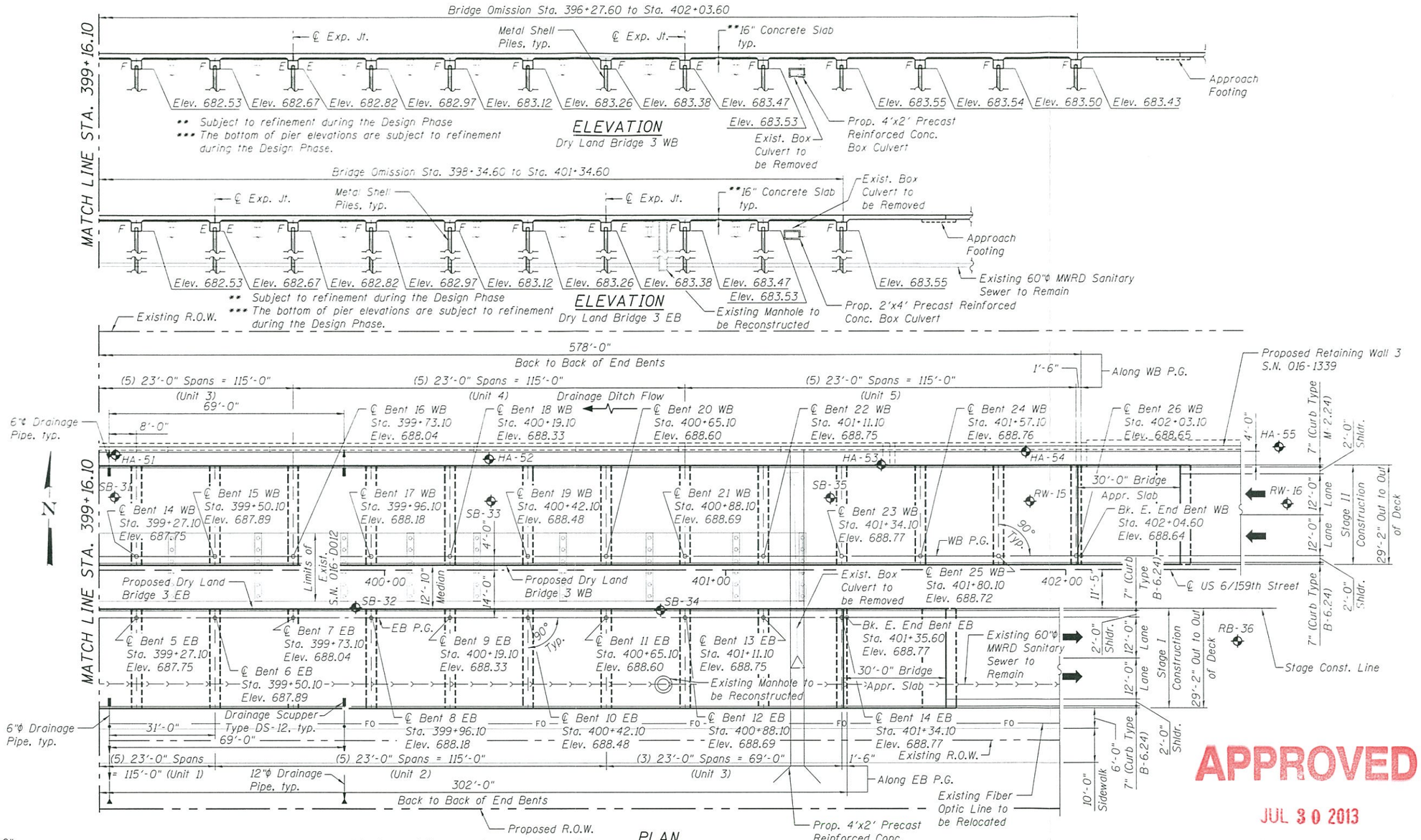

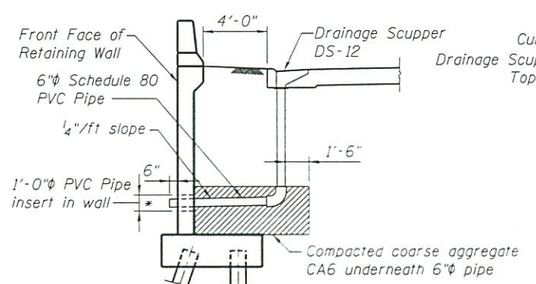

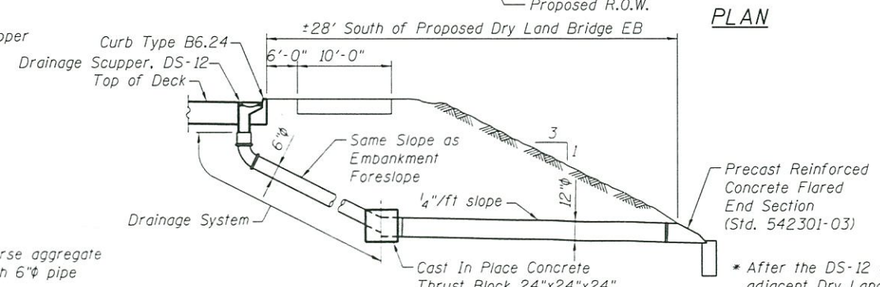

SCUPPER AND DRAINAGE SYSTEM DETAILS

* After the DS-12 drainage scupper has been installed and the adjacent Dry Land Bridge constructed, concrete shall be placed between the 1'-0"φ PVC pipe insert and the 6"φ drain pipe.

LEGEND

Soil Boring Location

APPROVED

JUL 30 2013

AS A BASIS FOR PREPARATION OF DETAILED PLANS

GENERAL PLAN & ELEVATION
DRY LAND BRIDGE 3
US ROUTE 6 / 159TH STREET
F.A.P. RTE 351 - SEC. 2010-081-R
COOK COUNTY
STATION 399+15.00
STRUCTURE NO. 016-D012

T:\5106-US6\Structure\dgn\5106_TSL Dry Land Bridge 3.2.dgn

LOCHNER H.W. LOCHNER, INC. 20 N. WACKER DRIVE, SUITE 1200 CHICAGO, ILLINOIS 60606	USER NAME =	DESIGNED -	REVISED	STATE OF ILLINOIS DEPARTMENT OF TRANSPORTATION	F.A.P. RTE. 351	SECTION 2010-081-R	COUNTY COOK
	FILE NAME = 5106_TSL Dry Land Bridge 3.2.dgn	CHECKED -	REVISED				TOTAL SHEETS / SHEET NO.
	PLOT SCALE =	DRAWN -	REVISED				CONTRACT NO. 60L72
	PLOT DATE =	CHECKED -	REVISED	SHEET NO. 2 OF 4 SHEETS			ILLINOIS FED. AID PROJECT

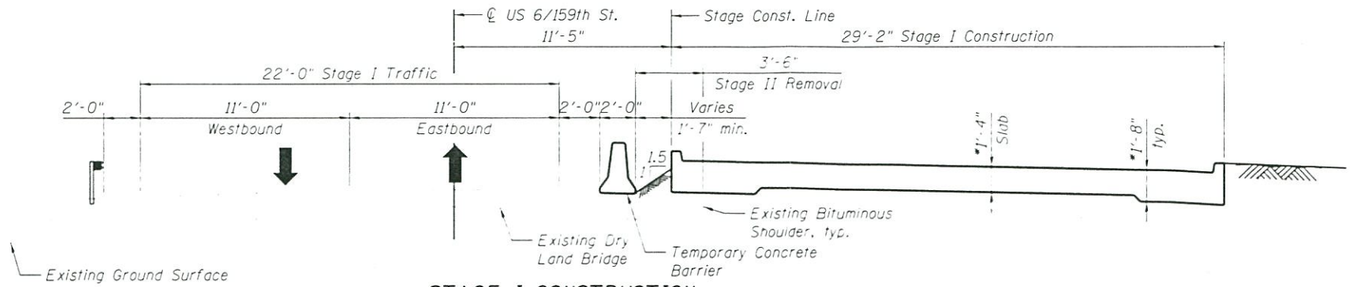

STAGE I CONSTRUCTION

(Looking East)

* Subject to Refinement during the Design Phase

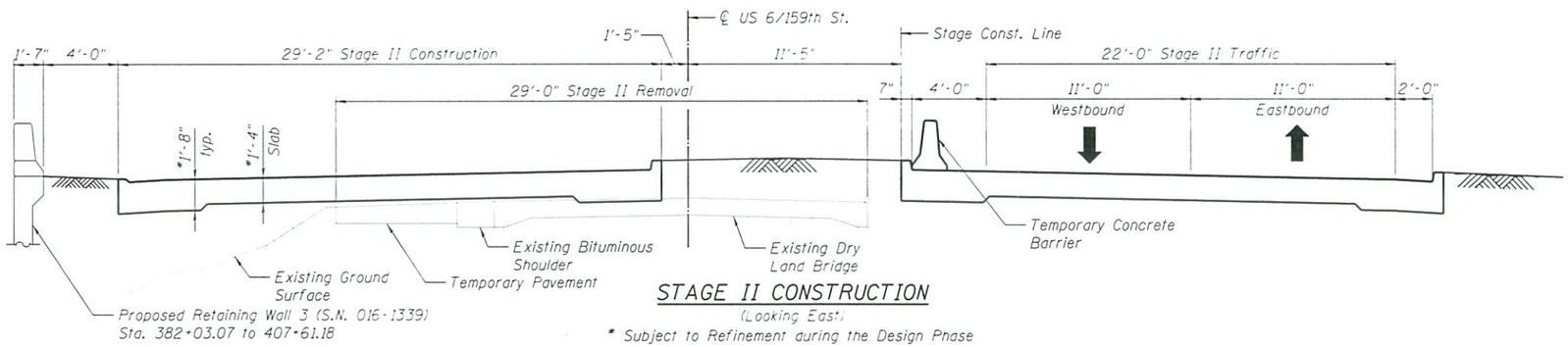

STAGE II CONSTRUCTION

(Looking East)

* Subject to Refinement during the Design Phase

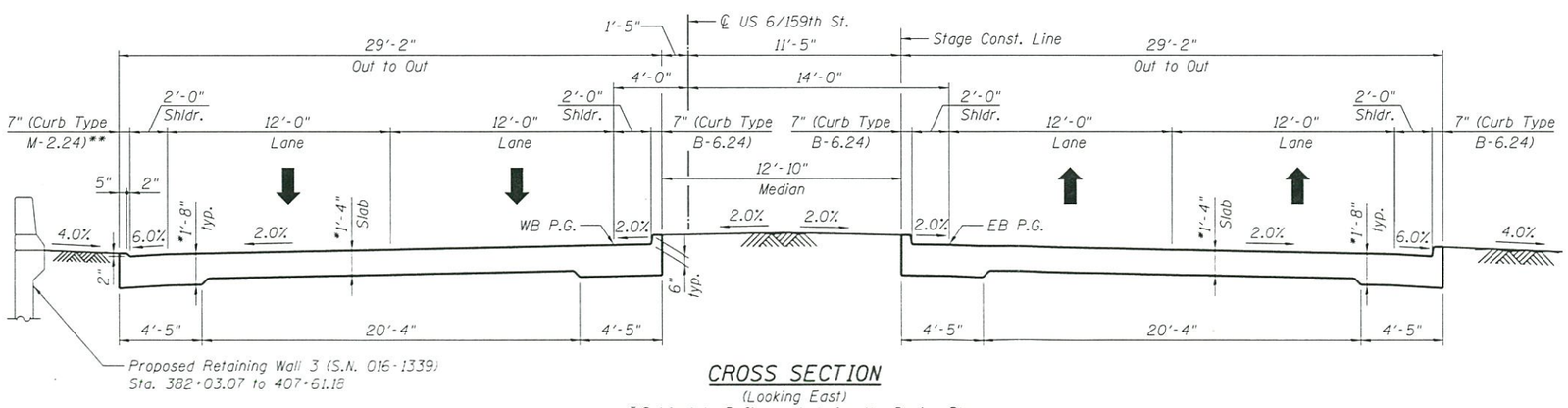

CROSS SECTION

(Looking East)

* Subject to Refinement during the Design Phase

APPROVED

JUL 30 2013

AS A BASIS FOR PREPARATION OF DETAILED PLANS

SECTIONS AND DETAILS
DRY LAND BRIDGE 3
US ROUTE 6 / 159TH STREET
F.A.P. RTE 351 - SEC. 2010-081-R
COOK COUNTY
STATION 399+15.00
STRUCTURE NO. 016-D012

T:\5106-US6\Structure\dgn\5106_TSL Dry Land Bridge 3.3.dgn

LOCHNER H.W. LOCHNER, INC. 20 N. WACKER DRIVE, SUITE 1200 CHICAGO, ILLINOIS 60606	USER NAME =	DESIGNED - LJB	REVISED
	FILE NAME = 5106_TSL Dry Land Bridge 3.3.dgn	CHECKED - RH	REVISED
	PLOT SCALE =	DRAWN - LJB	REVISED
	PLOT DATE =	CHECKED - MAF	REVISED

STATE OF ILLINOIS
DEPARTMENT OF TRANSPORTATION

SHEET NO. 3 OF 4 SHEETS

F.A.P. RTE.	SECTION	COUNTY	TOTAL SHEETS	SHEET NO.
351	2010-081-R	COOK		
		CONTRACT NO. 60L72		
		ILLINOIS FED. AID PROJECT		

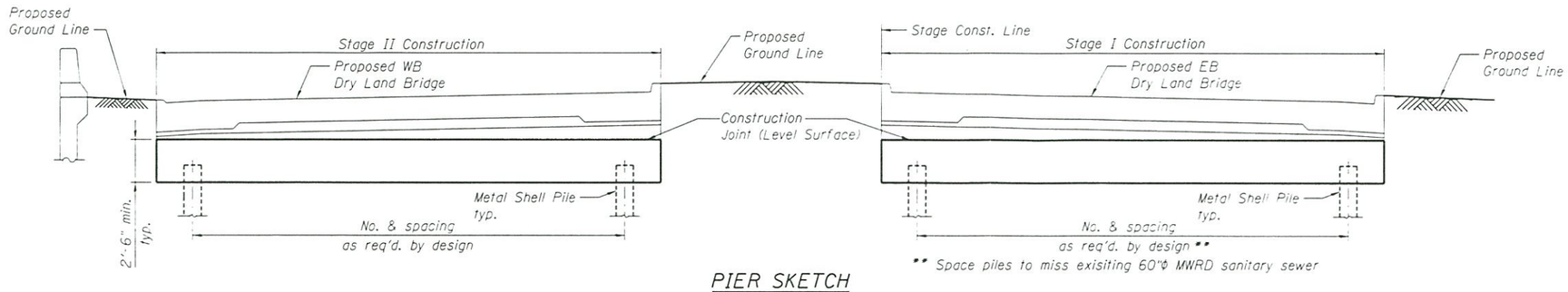

PIER SKETCH
(Looking East)

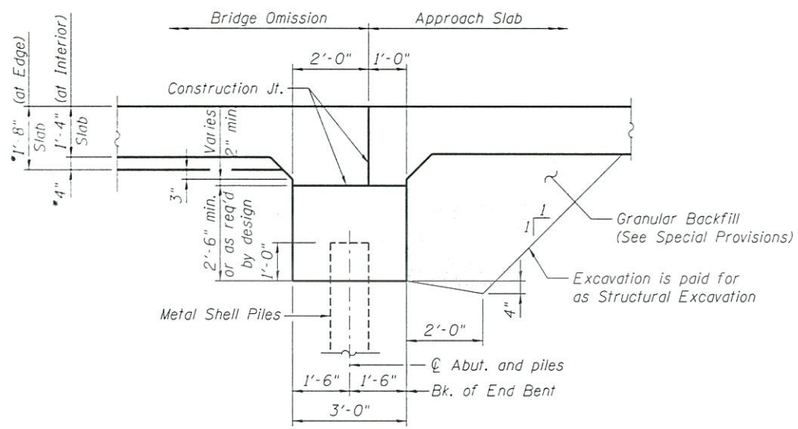

END PILE BENT CAP SECTION
* Subject to Refinement during the Design Phase

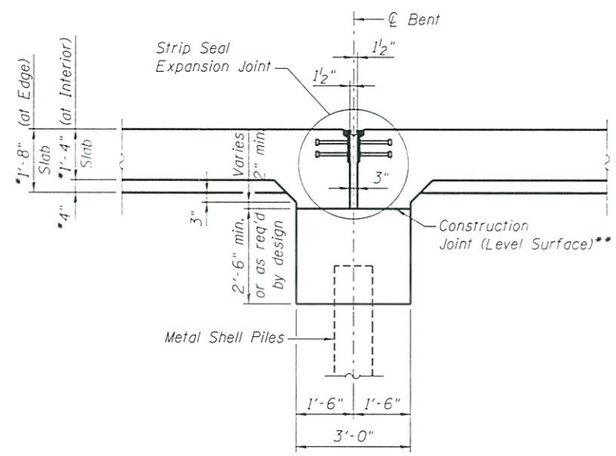

INTERIOR EXPANSION PILE BENT CAP SECTION
* Subject to Refinement during the Design Phase
** Top concrete surface of the expansion pier caps shall be finished to a very smooth finish. ⅛" neoprene sheet shall be placed on the entire top surface of the expansion pier caps prior to pouring the superstructure slab.

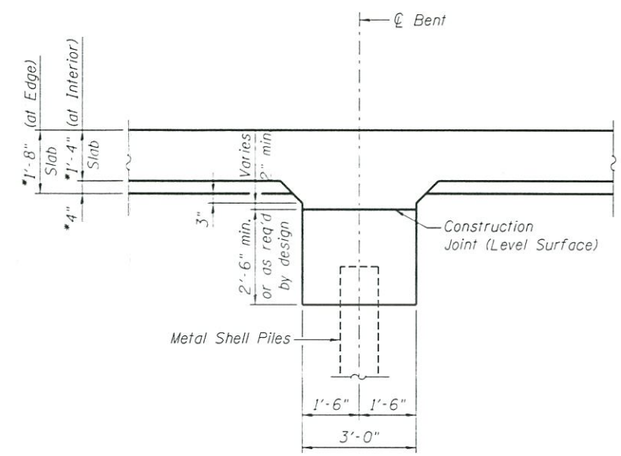

INTERIOR FIXED PILE BENT CAP SECTION
* Subject to Refinement during the Design Phase

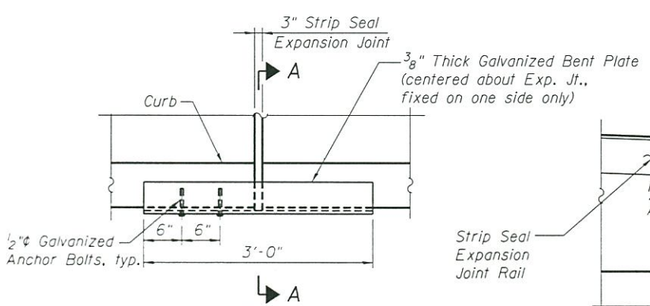

PLAN
Typical at each end of Expansion Joints

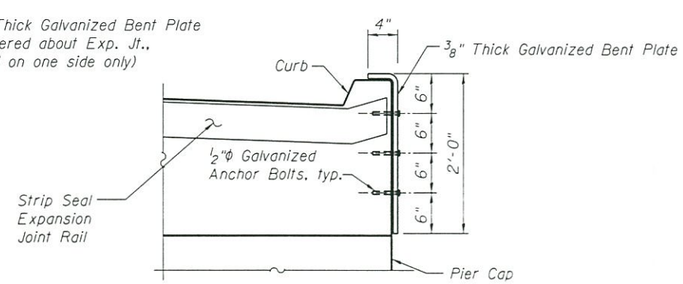

SECTION A-A

APPROVED
JUL 30 2013
AS A BASIS FOR
PREPARATION OF DETAILED PLANS

SECTIONS AND DETAILS
DRY LAND BRIDGE 3
US ROUTE 6 / 159TH STREET
F.A.P. RTE 351 - SEC. 2010-081-R
COOK COUNTY
STATION 399+15.00
STRUCTURE NO. 016-D012

$FILE$

LOCHNER H. W. LOCHNER, INC. 225 WEST WASHINGTON STREET 12 TH FLOOR CHICAGO, ILLINOIS 60606	USER NAME =	DESIGNED - LJB	REVISED
	FILE NAME = $FILES$	CHECKED - RH	REVISED
	PLOT SCALE =	DRAWN - LJB	REVISED
	PLOT DATE =	CHECKED - MAF	REVISED

STATE OF ILLINOIS
DEPARTMENT OF TRANSPORTATION

SHEET NO. 4 OF 4 SHEETS

F.A.P. RTE.	SECTION	COUNTY	TOTAL SHEETS	SHEET NO.
351	2010-081-R	COOK		
		CONTRACT NO. 60L72		
		ILLINOIS FED. AID PROJECT		