Bench Mark: Set "X" on northwest corner of handhole along east edge of SB I-90/94 20 feet north of Madison Street. Elev. 596.13.

Existing Structure: Existing Retaining Wall 20. Masonry wall that measures 148'-0" from Washington Boulevard NE Wingwall north to cast-in-place concrete retaining wall on metal shell piles that measures 84'-9". Existing masonry wall is to remain. Existing cast-in-place wall to remain.

Traffic on NB Randolph Exit Ramp will be detoured during construction.

No Salvage.

Notes:

1.) Wall offsets are measured from the ℄ of NB Randolph Exit Ramp to the front face of cast-in-place fascia panels.
2.) C denotes construction joint.
3.) E denotes expansion joint.
4.) F.F. denotes Front Face.
5.) B.F. denotes Back Face.
6.) Soldier pile section, shaft diameter, spacing and tip elevation to be determined during final design.
7.) Stainless Steel Trellises to be installed on the face of the wall. For details, see Typical Cross Section and SS Cable Wall Mount Unit Detail on Sheet 2 of 2.
8.) Proposed drainage information shown is conceptual and will be determined during final design.

CURVE DATA

(NB Randolph Exit Ramp)
Prop. Curve P-RAN-NX-1
P.I. Sta. = 8741+73.99
Δ = 2° 55' 46" (RT)
D = 1° 49' 50"
R = 3,130.00'
T = 80.03'
L = 160.03'
E = 1.02'
e = NA
T.R. = NA
S.E. Run = NA
P.C. Sta. = 8740+93.96
P.T. Sta. = 8742+53.98

HIGHWAY CLASSIFICATION

NB Randolph Exit Ramp
Functional Class: Interstate
ADT: 2,400 (2012); 3,000 (2040)
ADTT: 99 (2012); 123 (2040)
DHV: 340 (2040)
Design Speed: 30 m.p.h.
Posted Speed: 30 m.p.h.
One-Way Traffic
Directional Distribution: 100%

NB Lake Exit Ramp
Functional Class: Interstate
ADT: 8,200 (2012); 9,000 (2040)
ADTT: 312 (2012); 342 (2040)
DHV: 740 (2040)
Design Speed: 30 m.p.h.
Posted Speed: 30 m.p.h.
One-Way Traffic
Directional Distribution: 100%

DESIGN SPECIFICATIONS

2017 AASHTO LRFD Bridge Design Specifications, 8th Edition

DESIGN STRESSES

FIELD UNITS

f'c = 3,500 psi
fy = 60,000 psi (Reinforcement)

SOLDIER PILES

fy = 50,000 psi (AASHTO M270 Gr. 50)

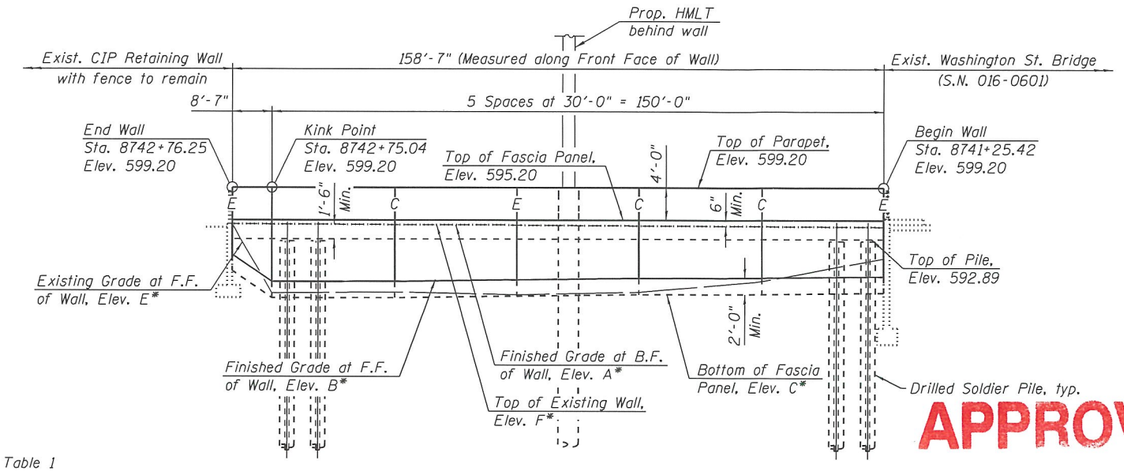

* For elevations, see Table 1 on Sheet 2 of 2.

ELEVATION

(Looking East at F.F. of Wall)

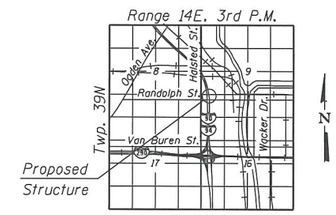

LOCATION SKETCH

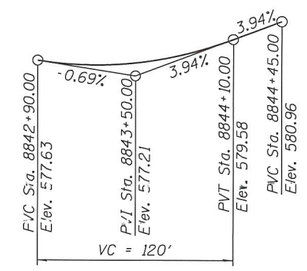

PROFILE GRADE

(℄ NB Lake Exit Ramp)

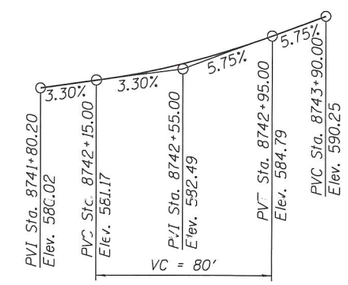

PROFILE GRADE

(℄ NB Randolph Exit Ramp)

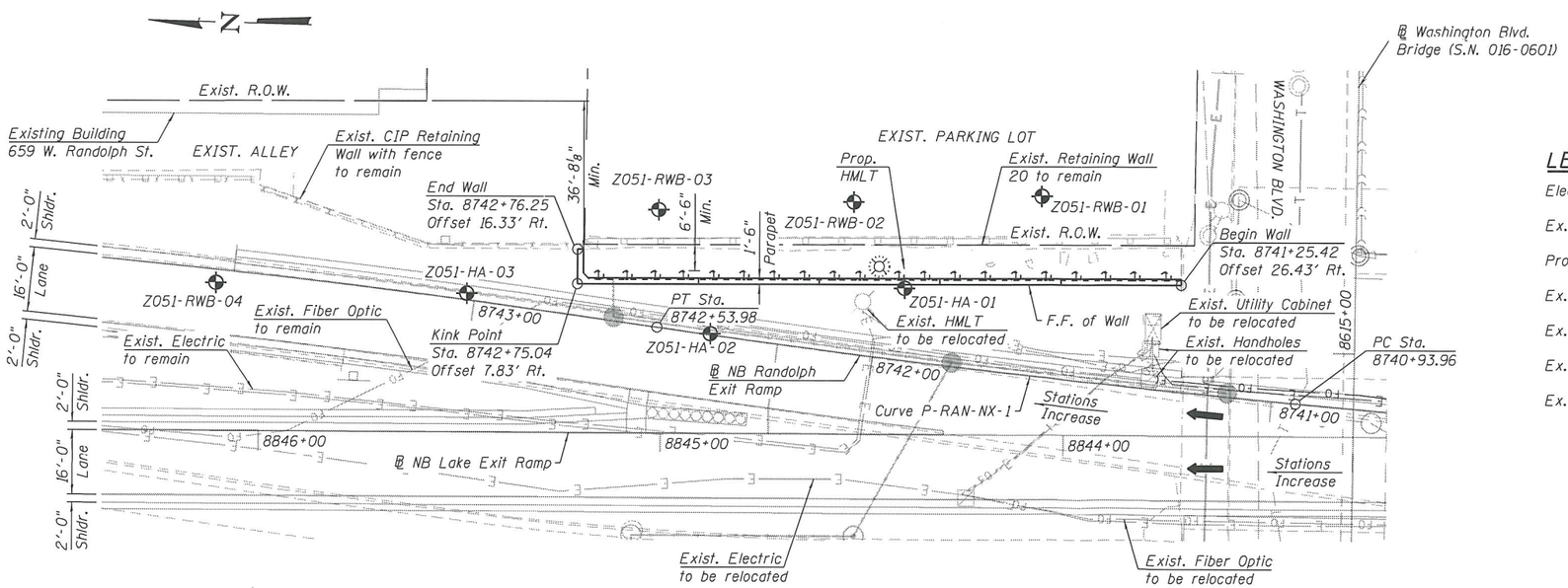

PLAN

LEGEND:

Electric	—E—	Soil Boring	
Ex. Storm Sewer		Existing Catch Basin	
Prop. Storm Sewer		Proposed Catch Basin	
Ex. Telephone	—T—	Existing Manhole	
Ex. Fiber Optic	—FO—	Proposed Manhole	
Ex. Fence	—X—X—	Proposed Inlet	
Ex. Guardrail			

APPROVED
OCT 30 2019
AS A BASIS FOR PREPARATION OF DETAILED PLANS

GENERAL PLAN
RETAINING WALL 52 ALONG NB RANDOLPH EXIT RAMP
F.A.I. RTE. 90/94 (KENNEDY EXPRESSWAY)
SECTION 2015-019R
COOK COUNTY
STATION 8741+25.42 TO STATION 8742+76.25
STRUCTURE NO. 016-Z051

TranSystems

USER NAME = wjcollett	DESIGNED - JNP	REVISED -	
	CHECKED - MDS/WJC	REVISED -	
PLOT SCALE = 36.0000 ' / in.	DRAWN - JNP	REVISED -	
PLOT DATE = 10/7/2019	CHECKED - MDS/WJC	REVISED -	

STATE OF ILLINOIS
DEPARTMENT OF TRANSPORTATION

SHEET NO. 1 OF 2 SHEETS

F.A.I. RTE.	SECTION	COUNTY	TOTAL SHEETS	SHEET NO.
90/94	2015-019R	COOK	2	1
		CONTRACT NO. 62A76		
		ILLINOIS FED. AID PROJECT		

4:48:19 PM - pw:\\AECOM-NA-AWS.aecomonline.local:AECOM_DS02_NA\Documents\01Americas\Transportation\60269938 Circle\Phase II-000_CAD\008_Structural\Structure_016-Z051\TSL\Sheets\062051-62A76-SHT-TSL-001.dgn

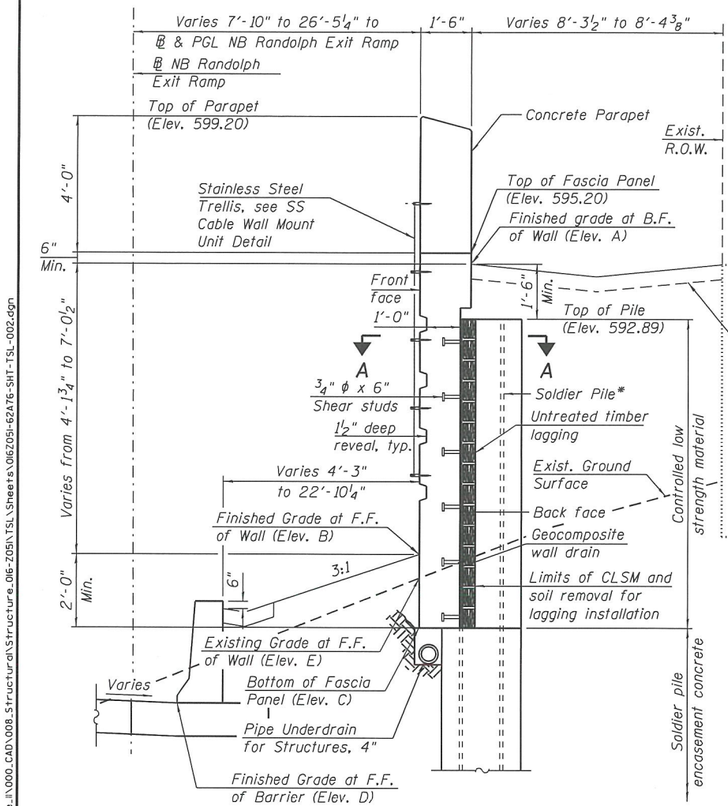

TYPICAL CROSS SECTION

(Looking Upstation)

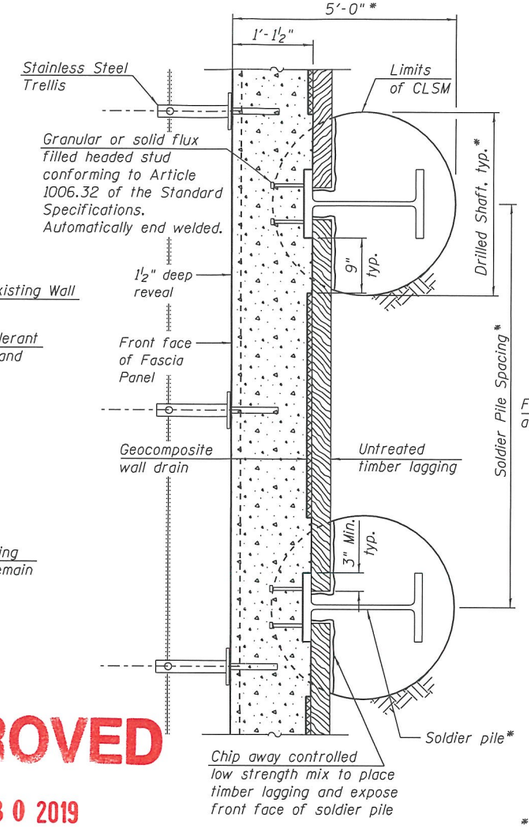

SECTION A-A

APPROVED

OCT 30 2019

AS A BASIS FOR PREPARATION OF DETAILED PLANS

TABLE 1 - WALL ELEVATIONS

Station	Offset	Elevation A	Elevation B	Elevation C	Elevation D	Elevation E	Elevation F
8741+25.42	26.43' Rt.	594.39	588.31	586.31	578.07	590.52	594.39
8741+55.50	23.27' Rt.	594.45	588.14	586.14	578.96	587.73	594.45
8741+85.50	19.81' Rt.	594.51	588.15	586.15	580.11	586.38	594.51
8742+15.44	16.08' Rt.	594.58	587.89	585.89	581.10	586.08	594.58
8742+45.31	12.06' Rt.	594.64	587.68	585.68	582.23	586.36	594.64
8742+75.04	7.83' Rt.	594.70	587.66	585.66	583.62	586.26	594.70
8742+76.25	16.33' Rt.	594.70	590.56	588.56	583.68	594.70	594.70

Elevation A - Finished Grade at B.F. of Wall
Elevation B - Finished Grade at F.F. of Wall
Elevation C - Bottom of Fascia Panel
Elevation D - Finished Grade at F.F. of Barrier
Elevation E - Existing Grade at F.F. of Wall
Elevation F - Top of Existing Wall

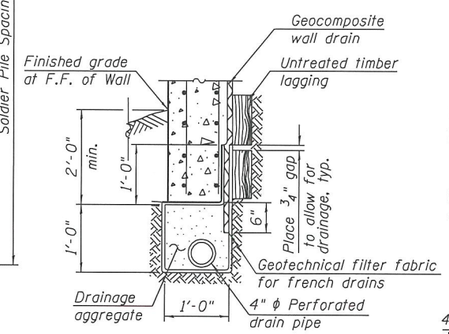

PIPE UNDERDRAIN DETAIL BETWEEN SOLDIER PILES

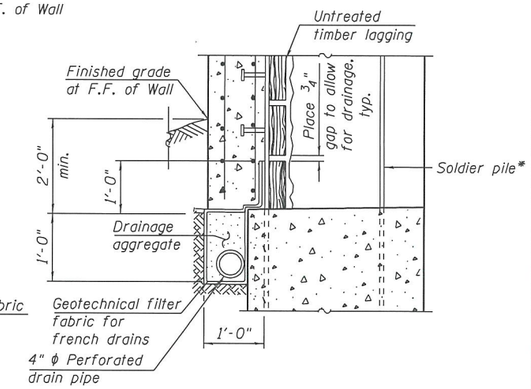

PIPE UNDERDRAIN DETAIL AT SOLDIER PILE

* Soldier Pile section, shaft diameter, spacing, and tip elevation to be determined during final design.

LEGEND:

B.F. - denotes Back Face.
F.F. - denotes Front Face.

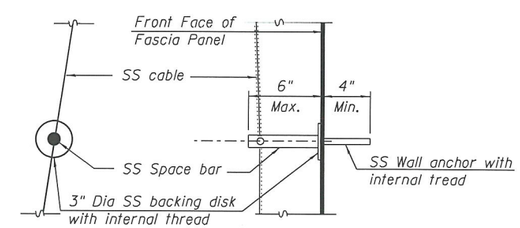

SS CABLE WALL MOUNT UNIT DETAIL

Note:
1.) Type, size and location of SS Wall Anchor shall be determined in final design.

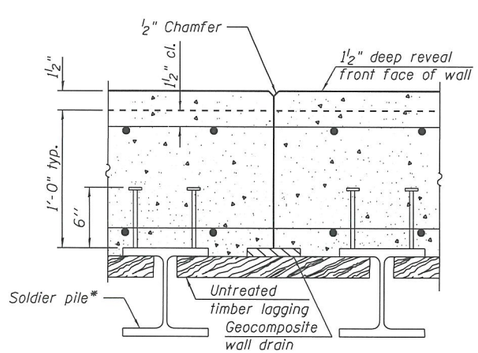

CONSTRUCTION JOINT DETAILS

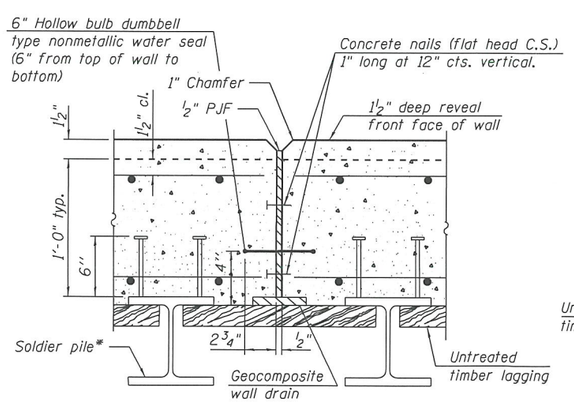

EXPANSION JOINT DETAILS

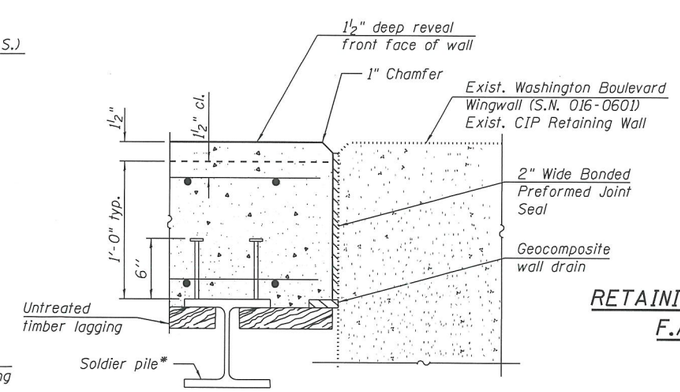

EXPANSION JOINT DETAIL AT EXISTING WALL

CROSS SECTION AND DETAILS
RETAINING WALL 52 ALONG NB RANDOLPH EXIT RAMP
F.A.I. RTE. 90/94 (KENNEDY EXPRESSWAY)
SECTION 2015-019R
COOK COUNTY
STATION 8741+25.42 TO STATION 8742+76.25
STRUCTURE NO. 016-Z051

TranSystems

USER NAME = wjcollett	DESIGNED - JNP	REVISED -	
	CHECKED - WJC/MDS	REVISED -	
PLOT SCALE = 0.17 ' / in.	DRAWN - JNP	REVISED -	
PLOT DATE = 10/7/2019	CHECKED - WJC/MDS	REVISED -	

STATE OF ILLINOIS
DEPARTMENT OF TRANSPORTATION

SHEET NO. 2 OF 2 SHEETS

F.A.I. RTE.	SECTION	COUNTY	TOTAL SHEETS	SHEET NO.
90/94	2015-019R	COOK	2	2
		CONTRACT NO. 62A76		
		ILLINOIS FED. AID PROJECT		

4:58:45 PM - pw:\\AECOM-NA-AWSI.aecomonline.local:AECOM_DS02_NA\Documents\01 Americas\Transportation\60269938 Circle\Phase_II\000_CAD\008_Structural\Structure_016-Z051\TSL\Sheets\016Z051-62A76-SHT-TSL-002.dgn