Bench Mark: USC&GS disk #P210. NE wingwall S.N. 018-0011 Elev. 587.59

Existing Structure: S.N. 018-0011 Built in 1952 as F.A. Rte. 12, Sec. C-F-X-B, at Sta. 2277+20(1). Structure consists of 3 span reinf. conc. deck on steel WF beams supported by pile bent spill thru abuts. & open concrete pile bent piers. 156'-6" Bk.-Bk. abuts., 35'-11" O.-O. deck. Traffic to be detoured during construction.

No salvage

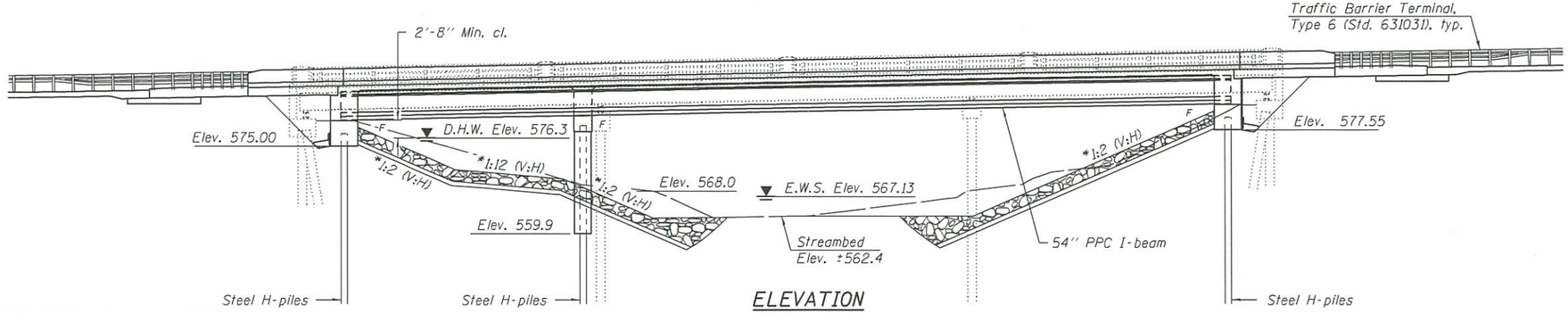

ELEVATION

* At Rt. L's.

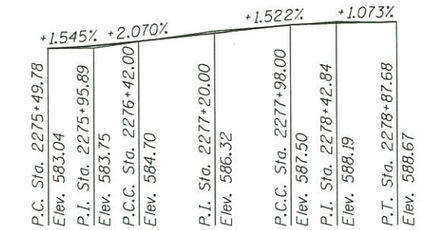

PROFILE GRADE

(along ℄ F.A.S. Rte. 1707)

APPROVED

JAN 22 2014

AS A BASIS FOR PREPARATION OF DETAILED PLANS

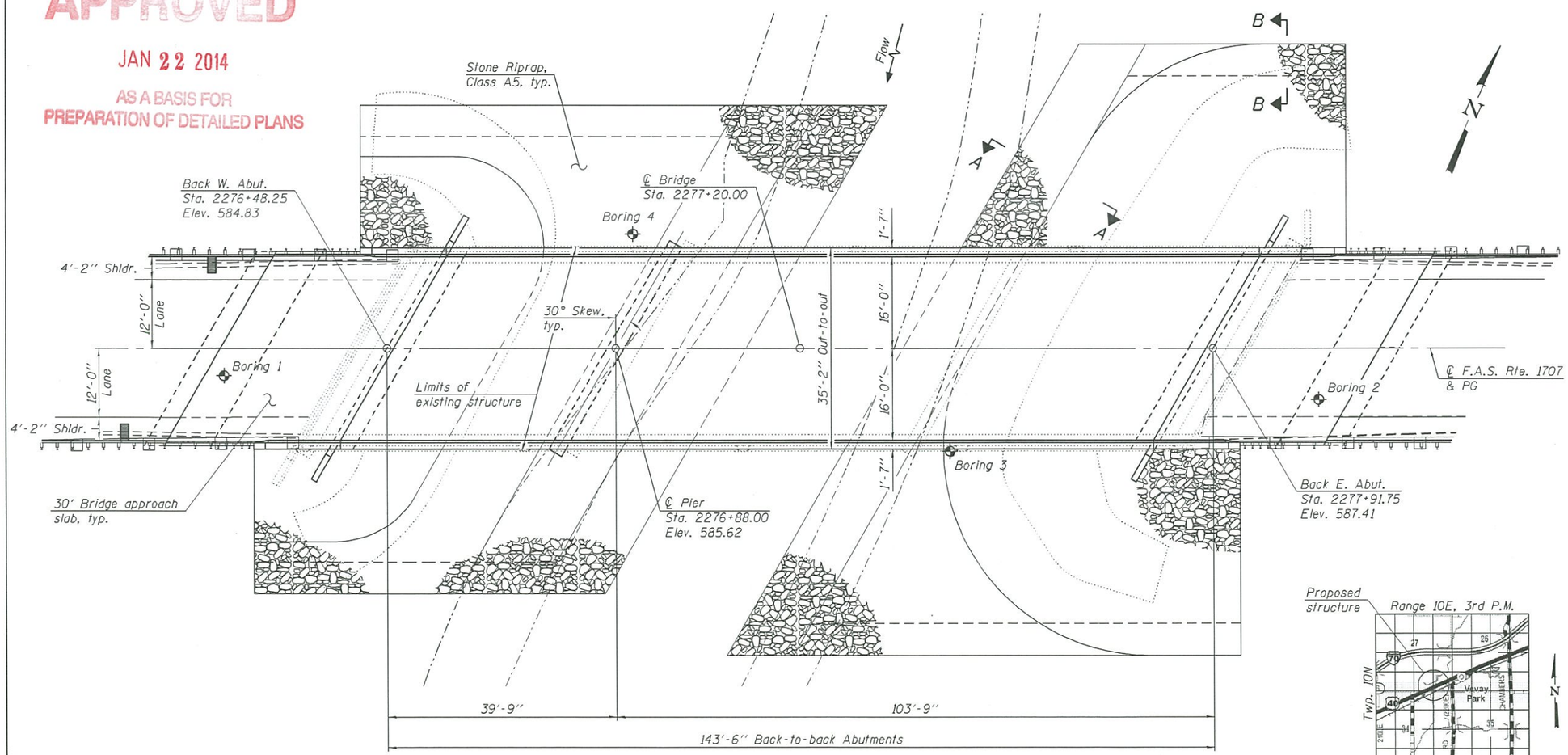

PLAN

DESIGN SPECIFICATIONS

2012 AASHTO LRFD Bridge Design Specifications, 6th Edition with 2013 Interims

DESIGN STRESSES

FIELD & EXISTING UNITS

f'c = 3,500 psi
fy = 60,000 psi (reinforcement)

PRECAST PRESTRESSED UNITS

f'c = 7,000 psi
f'ci = 6,000 psi
fpu = 270,000 psi (1/2" ϕ low lax strands)
fpbt = 201,960 psi (1/2" ϕ low lax strands)

HIGHWAY CLASSIFICATION

F.A.S. Rte. 1707 - U.S. Rte. 40
Functional Class: Major Collector
ADT: 2050 (2011); 2700 (2035)
ADTT: 190 (2011)
DHV: 158 (2035)
Design Speed: 60 m.p.h.
Posted Speed: 55 m.p.h.
Two-Way Traffic
Directional Distribution: 51:49

LOADING HL-93

Allow 50#/sq. ft. for future wearing surface.

SEISMIC DATA

Seismic Performance Zone (SPZ) = 2
Design Spectral Acceleration at 1.0 sec. (S_{D1}) = 0.189 g
Design Spectral Acceleration at 0.2 sec. (S_{DS}) = 0.412 g
Soil Site Class = D

LOCATION SKETCH

GENERAL PLAN & ELEVATION
U.S. ROUTE 40 OVER RANGER CREEK
F.A.S. RTE. 1707 - SEC. (CF,X)B
CUMBERLAND COUNTY
STATION 2277+20.00
STRUCTURE NO. 018-0061

DESIGNED -	G.G.E. / J.S.B.
CHECKED -	ALEX SIUDYLA
DRAWN -	W.D.C. / H.T.D. / M.B.M.
CHECKED -	J.S.B. / A.S.

JANUARY 8, 2014

STATE OF ILLINOIS
DEPARTMENT OF TRANSPORTATION

SHEET NO. 1 OF 2 SHEETS

F.A.S. RTE.	SECTION	COUNTY	TOTAL SHEETS	SHEET NO.
1707	(CF,X)B	CUMBERLAND		
		CONTRACT NO. 74170		
		ILLINOIS FED. AID PROJECT		

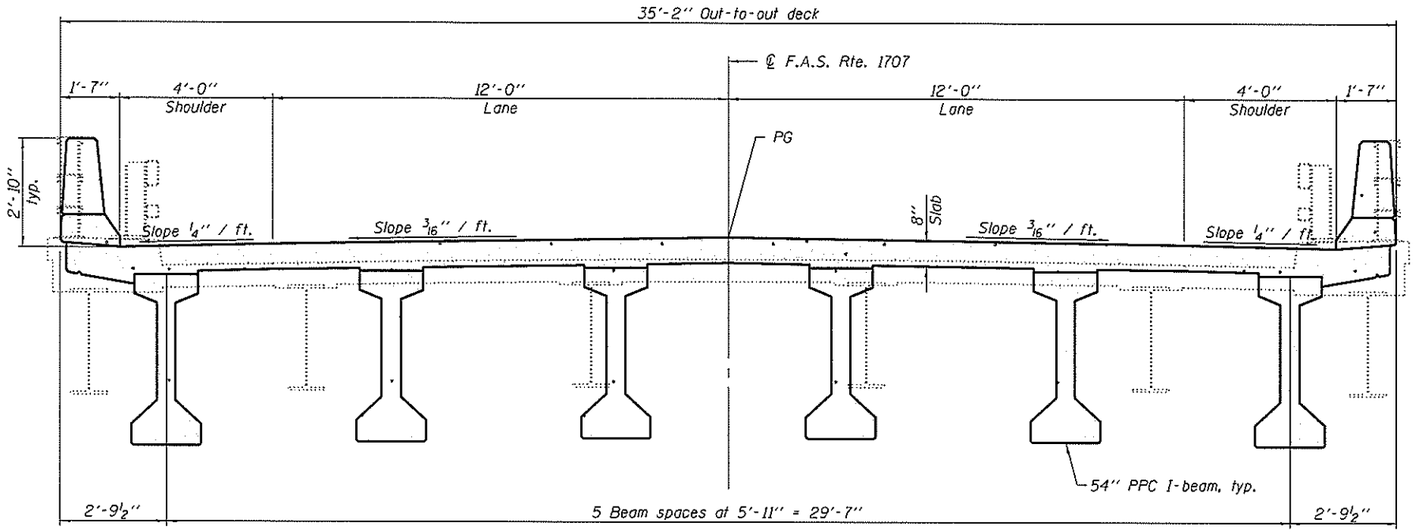

CROSS SECTION

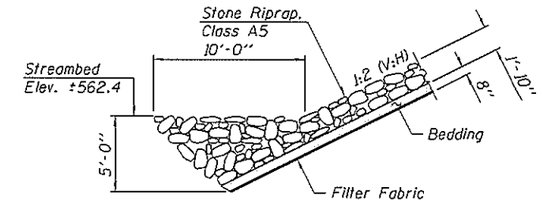

SECTION A-A

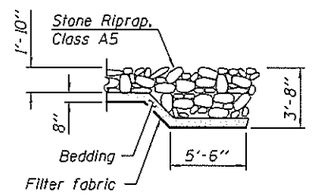

SECTION B-B

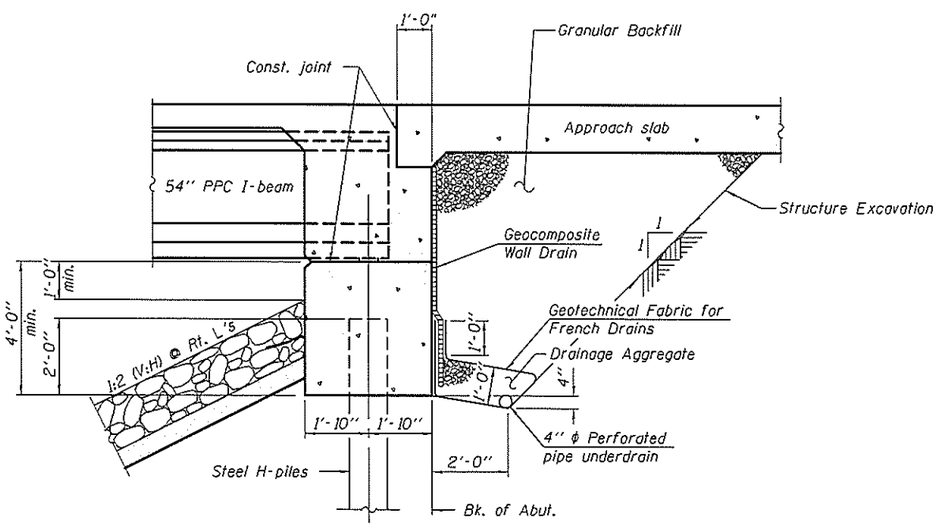

SECTION THRU INTEGRAL ABUTMENT

(Horiz. dim. @ Rt. L's)

WATERWAY INFORMATION

Drainage Area = 17.2 mi.²

Existing Overtopping Elev. 582.0 at Sta. 2274+00
Proposed Overtopping Elev. 582.0 at Sta. 2274+00

Flood	Freq. Yr.	Q C.F.S.	Opening Sq. Ft. Exist.	Opening Sq. Ft. Prop.	Nat. H.W.E.	Head - Ft. Exist.	Head - Ft. Prop.	Headwater El. Exist.	Headwater El. Prop.
	10	2820	591	619	574.4	0.5	0.5	574.9	574.9
Design	50	4510	771	808	576.3	0.8	0.7	577.1	577.0
Base	100	5260	851	892	577.1	0.9	0.8	578.0	577.9
Scour Design Check	200	6025	934	978	577.9	0.9	0.8	578.8	578.7
Overtop Existing	-	-	-	-	-	-	-	-	-
Overtop Proposed	-	-	-	-	-	-	-	-	-
Max. Calc.	500	7100	1041	1091	578.9	1.0	0.9	579.9	579.8

10 year velocity through existing bridge = 4.8 ft./sec.
10 year velocity through proposed bridge = 4.6 ft./sec.

DESIGN SCOUR ELEVATION TABLE

	Design Scour Elevations (ft.)		
	W. Abut.	Pier	E. Abut.
0100	575.0	550.3	577.5
0500	575.0	547.3	577.5

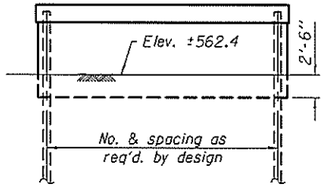

PIER SKETCH

DETAILS
U.S. ROUTE 40 OVER RANGER CREEK
F.A.S. RTE. 1707 - SEC. (CF,X)B
CUMBERLAND COUNTY
STATION 2277+20.00
STRUCTURE NO. 018-0061

DESIGNED -	G.G.E. / J.S.B.
CHECKED -	ALEX SIUDYLA
DRAWN -	W.D.C. / H.T.D. / M.B.M.
CHECKED -	J.S.B. / A.S.

JANUARY 8, 2014

STATE OF ILLINOIS
DEPARTMENT OF TRANSPORTATION

SHEET NO. 2 OF 2 SHEETS

F.A.S. RTE.	SECTION	COUNTY	TOTAL SHEETS	SHEET NO.
1707	(CF,X)B	CUMBERLAND	___	___
		CONTRACT NO. 74170		
		ILLINOIS FED. AID PROJECT		