BENCHMARK: BM 150 - Chiseled square on NW wingwall of SN 018-0027, Elev. 528.53 (NAVD 88)

EXISTING STRUCTURE: SN 018-0027 was originally built in 1931 as SBI Rte. 130, Section 113-B. It was a 5 span reinforced concrete deck girder superstructure on concrete solid wall piers and closed abutments on timber pile supported spread footings. In 1981 the substructure was widened and the superstructure was replaced with 27" deep PPC deck beams. The out-to-out deck width is 34'-0" and the length is 306'-4 5/8" back-to-back of abutments. The structure was constructed with a 45° right forward skew. Traffic shall be maintained utilizing stage construction.

No salvage.

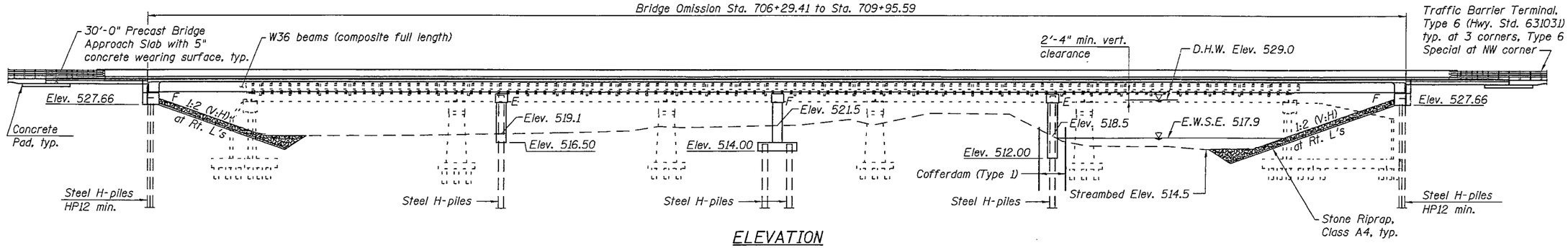

ELEVATION

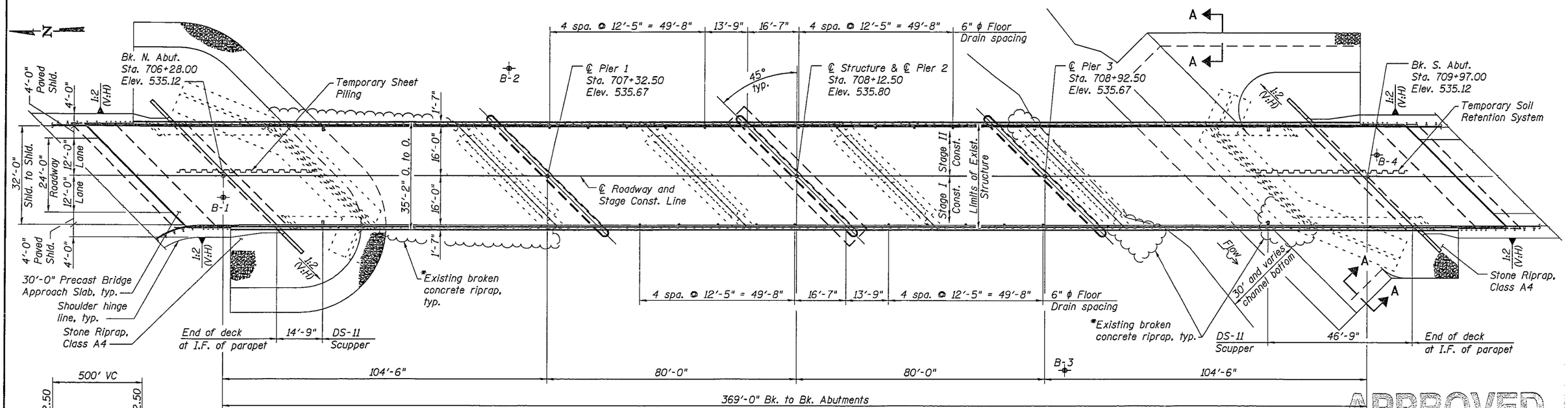

PLAN

*Remove as needed to facilitate the placement of riprap and construction of substructure units

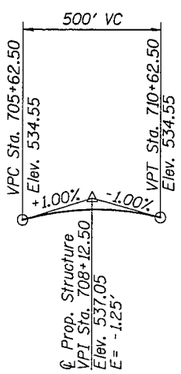

PROFILE GRADE
(Along ℄ Roadway)

DESIGN SCOUR ELEVATION TABLE

	N. Abut.	Pier 1	Pier 2	Pier 3	S. Abut.
Q100	527.7	509.1	511.5	494.5	527.7
Q185	527.7	483.1	485.5	477.4	527.7
Q500	527.7	485.1	487.5	487.5	527.7

WATERWAY INFORMATION

Drainage Area = 49.7 Sq. Mi. Exist. Low Grade Elev. 531.19 @ Sta. 706+00; Prop. Low Grade Elev. 531.25 @ Sta. 697+00

Flood	Freq. Yr.	Q C.F.S.	Opening-Sq. Ft. Exist.	Opening-Sq. Ft. Prop.	Nat. H.W.E.	Head-Ft. Exist.	Head-Ft. Prop.	Headwater El. Exist.	Headwater El. Prop.
	10	5050	1462	1689	527.0	1.0	0.8	528.0	527.8
Design	50	7940	1737	2178	529.0	1.1	1.0	530.1	530.0
Base	100	9210	1737	2378	529.8	1.2	1.0	531.0	530.8
Overtop. Exist.	110	9450	1737		529.9	1.3		531.2	
Overtop. Prop.	185			2478	530.2		1.1		531.3
Max. Calc.	500	12300	1737	2578	530.6	1.1	0.7	531.7	531.3

10 Year velocity through existing structure = 3.5 FPS
10 Year velocity through proposed structure = 3.0 FPS

HIGHWAY CLASSIFICATION

FAP Route 116 (IL 130)
Functional Class: Rural Minor Arterial
ADT: 2100 (2012); 2730 (2032)
DHV: 300 (2032)
ADTT: 24.4%
Design Speed: 60 mph
Posted Speed: 55 mph
Two Way Traffic
Directional Distribution: 50:50

DESIGN SPECIFICATIONS

2012 AASHTO LRFD
Bridge Design Specifications

LOADING HL-93

Allow 50 psf for future wearing surface.

DESIGN STRESSES

FIELD UNITS

f'c = 3,500 psi
fy = 60,000 psi (Reinforcement)
fy = 50,000 psi (M270 Grade 50)

SEISMIC DATA

Seismic Performance Zone (SPZ) = 2
Design Spectral Acceleration at 1.0 sec. (S_{D1}) = 0.291g
Design Spectral Acceleration at 0.2 sec. (S_{DS}) = 0.675g
Soil Site Class = E

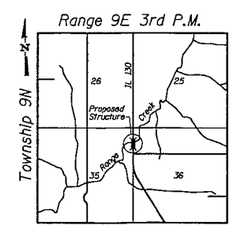

LOCATION SKETCH

APPROVED
FEB 04 2013
AS A BASIS FOR PREPARATION OF DETAILED PLANS

GENERAL PLAN & ELEVATION
IL 130 OVER RANGE CREEK
FAP ROUTE 116 - SECTION (113BR)B-1
CUMBERLAND COUNTY
STATION 708+12.50
STRUCTURE NO. 018-0067

ESCA CONSULTANTS, INC.

USER NAME = KAH	DESIGNED - MTD 07/12	REVISED - MTD 01/13	
ESCA PROJECT NO. 1070.01	CHECKED - RDP 07/12	REVISED -	
	DRAWN - DWH 07/12	REVISED -	
PLOT DATE = 1/3/2013 2:06:58 PM	CHECKED - MTD 07/12	REVISED -	

STATE OF ILLINOIS
DEPARTMENT OF TRANSPORTATION

SHEET NO. 1 OF 2 SHEETS

F.A.P. RTE.	SECTION	COUNTY	TOTAL SHEETS	SHEET NO.
116	(113BR)B-1	CUMBERLAND	-	-
		CONTRACT NO. 74324		
		ILLINOIS FED. AID PROJECT AID		

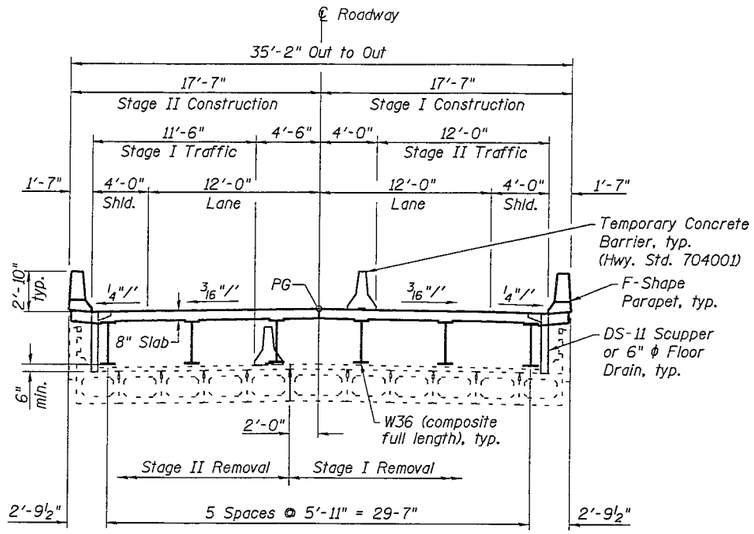

CROSS SECTION
(Looking South)

Note: A deck closure pour may be required based upon beam sections selected in final design

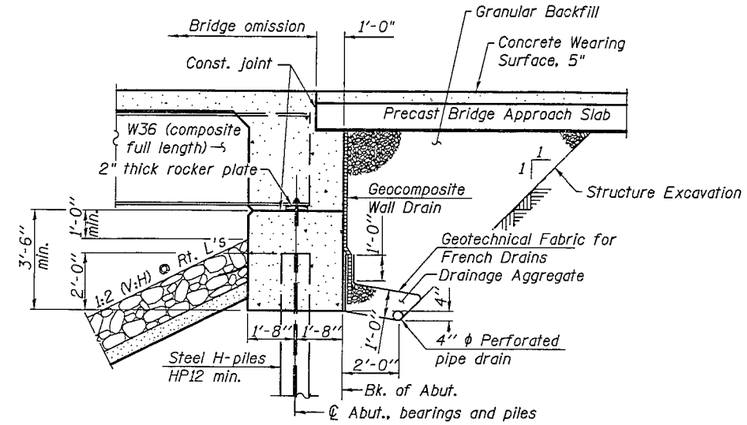

SECTION THRU INTEGRAL ABUTMENT
(Horiz. dim. @ Rt. L's)

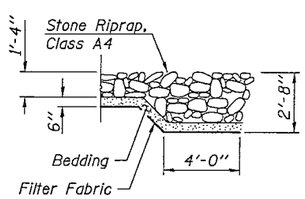

SECTION A-A

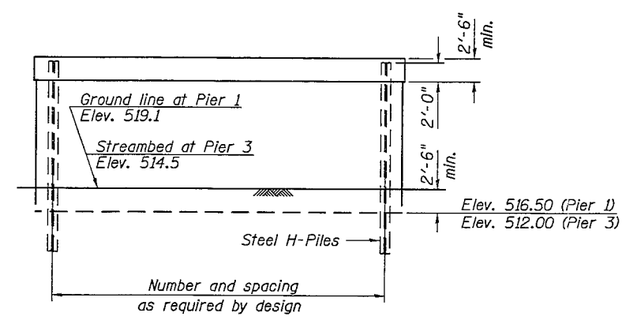

PIERS 1 & 3 SKETCH

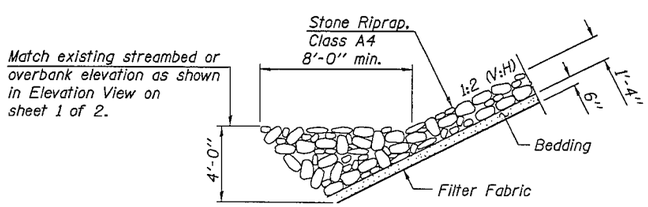

STONE RIPRAP ANCHOR DETAIL

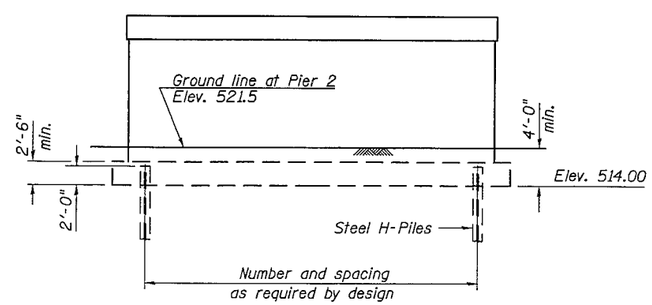

PIER 2 SKETCH

APPROVED

FEB 04 2013

AS A BASIS FOR PREPARATION OF DETAILED PLANS

DETAILS
IL 130 OVER RANGE CREEK
FAP ROUTE 116 - SECTION (113BR)B-1
CUMBERLAND COUNTY
STATION 708+12.50
STRUCTURE NO. 018-0067

ESCA CONSULTANTS, INC.	USER NAME = KAH	DESIGNED - MTD 07/12	REVISED - MTD 01/13	STATE OF ILLINOIS DEPARTMENT OF TRANSPORTATION	
	ESCA PROJECT NO. 1070.01	CHECKED - RDP 07/12	REVISED -		
		DRAWN - DWH 07/12	REVISED -		
	PLOT DATE = 1/3/2013 2:03:30 PM	CHECKED - MTD 07/12	REVISED -		SHEET NO. 2 OF 2 SHEETS

F.A.P. RTE.	SECTION	COUNTY	TOTAL SHEETS	SHEET NO.
116	(113BR)B-1	CUMBERLAND	-	-
		CONTRACT NO. 74324		
		ILLINOIS FED. AID PROJECT AID		

USER = KAH
PRINT DATE = 1/3/2013
PRINT TIME = 2:03:30 PM
PRINT SCALE = 1:0.166666
FILE NAME = 0180067-74324-02-TSL.dgn
MODEL NAME = PLOT
PRINT DRIVER = I_SD_P_B_0.plt
PEN TABLE = IDOT_VER02.TBL