Benchmark: BM #1 - Chiseled "X", Sta. 709+09.58, 14.34' Lt., Elev. 762.16

Existing Structure: S.N. 019-0031 built in 1982 as F.A.P. Rte 573, Sec. 116R-2BR at Sta. 709+56.09 as a one-span P.P.C. deck beam bridge. 33'-0" out-to-out deck, 80'-4" back-to-back abutments supported on concrete piles. Bituminous overlay replaced with concrete overlay in 1999. Existing bridge to be removed and replaced. Traffic maintained utilizing stage construction.

No Salvage.

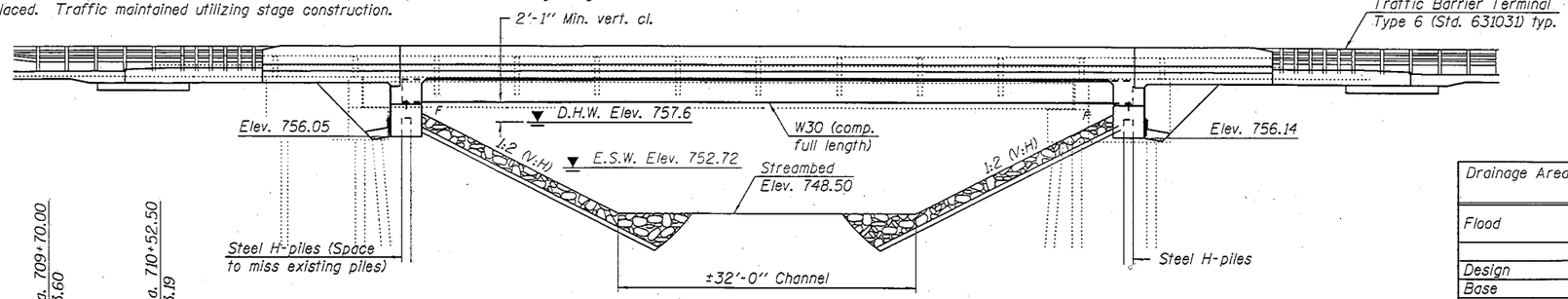


ELEVATION

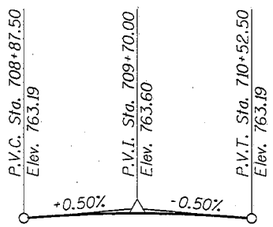


PROFILE GRADE
(Along ℄ U.S. Rte. 30)

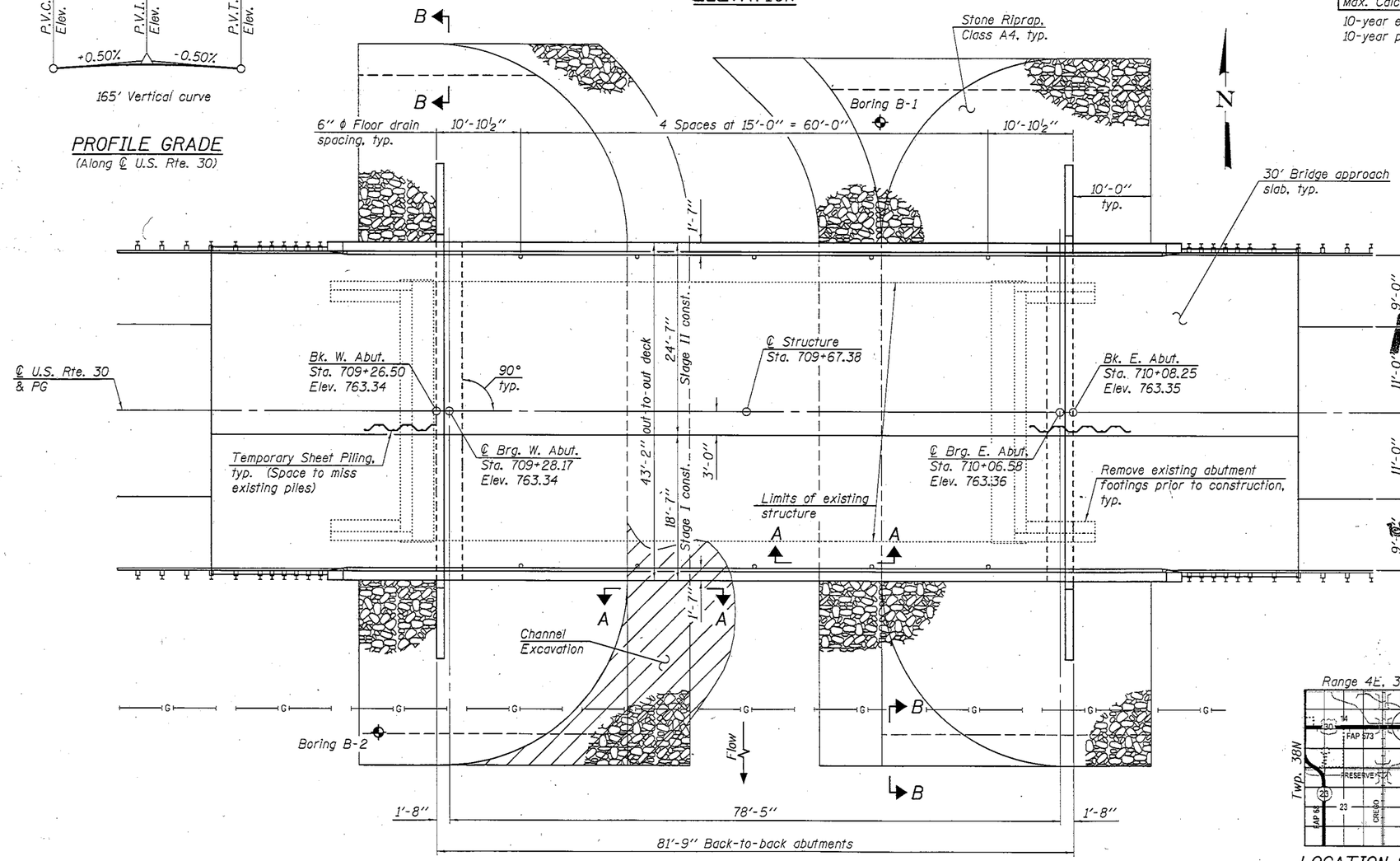


PLAN

## DESIGN SCOUR ELEVATION TABLE

| Design Scour Elevations (ft.) | | |
|---|---|---|
| | West Abut. | East Abut. |
| Q100 | 756.05 | 756.14 |
| Q500 | 756.05 | 756.14 |

## WATERWAY INFORMATION

Drainage Area = 12.3 sq. mi. Existing Low Grade Elev. 762.16 @ Sta. 710+60
Proposed Low Grade Elev. 762.15 @ Sta. 708+00

| Flood | Freq. Yr. | Q C.F.S. | Opening Sq. Ft. Exist. | Opening Sq. Ft. Prop. | Nat. H.W.E. | Head - Ft. Exist. | Head - Ft. Prop. | Headwater El. Exist. | Headwater El. Prop. |
|---|---|---|---|---|---|---|---|---|---|
| | 10 | 932 | 339 | 340 | 756.8 | 0.1 | 0.1 | 756.9 | 756.8 |
| Design | 50 | 1390 | 391 | 397 | 757.6 | 0.1 | 0.1 | 757.7 | 757.7 |
| Base | 100 | 1570 | 410 | 418 | 757.8 | 0.1 | 0.1 | 758.0 | 757.9 |
| Overtopping | - | - | - | - | - | - | - | - | - |
| Max. Calc. | 500 | 2020 | 451 | 464 | 758.4 | 0.2 | 0.1 | 758.6 | 758.6 |

10-year existing velocity = 3.0 ft./sec.
10-year proposed velocity = 2.9 ft./sec.

## DESIGN SPECIFICATIONS

2012 AASHTO LRFD Bridge Design Specifications, 6th Edition

## DESIGN STRESSES

FIELD UNITS

f'c = 3,500 psi
fy = 60,000 psi (Reinforcement)
fy = 50,000 psi (M270 Grade 50W)

## HIGHWAY CLASSIFICATION

F.A.P. Rte. 573 - U.S. Rte. 30
Functional Class: Minor Arterial
ADT: 4,200 (2009); 5,500 (2025)
ADTT: 330 (2025)
DHV: 550 (One-way)
Design Speed: 55 m.p.h.
Posted Speed: 55 m.p.h.
Two-Way Traffic
Directional Distribution: 50:50

APPROVED
MAR 25 2013
AS A BASIS FOR PREPARATION OF DETAILED PLANS

## LOADING HL-93

Allow 50#/sq. ft. for future wearing surface.

## SEISMIC DATA

Seismic Performance Zone (SPZ) = 1
Design Spectral Acceleration at 1.0 sec. ($S_{D1}$) = 0.09 g
Design Spectral Acceleration at 0.2 sec. ($S_{DS}$) = 0.16 g
Soil Site Class = D

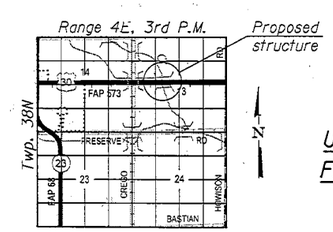


LOCATION SKETCH

# GENERAL PLAN & ELEVATION
# U.S. RTE. 30 OVER SOMONAUK CREEK
# F.A.P. RTE. 573 - SEC. (116R-2BR)BR
# DEKALB COUNTY
# STATION 709+67.38
# STRUCTURE NO. 019-0049

| | |
|---|---|
| DESIGNED - | RICHARD J. CHAPUT |
| CHECKED - | SEAN CHAU |
| DRAWN - | MICHAEL B. MOSSMAN |
| CHECKED - | MARCUS K. CHRISTENSEN |

3-22-2013

STATE OF ILLINOIS
DEPARTMENT OF TRANSPORTATION

SHEET NO. 1 OF 2 SHEETS

| F.A.P. RTE. | SECTION | COUNTY | TOTAL SHEETS | SHEET NO. |
|---|---|---|---|---|
| 573 | (116R-2BR)BR | DEKALB | ___ | ___ |

CONTRACT NO. 66A90

ILLINOIS FED. AID PROJECT

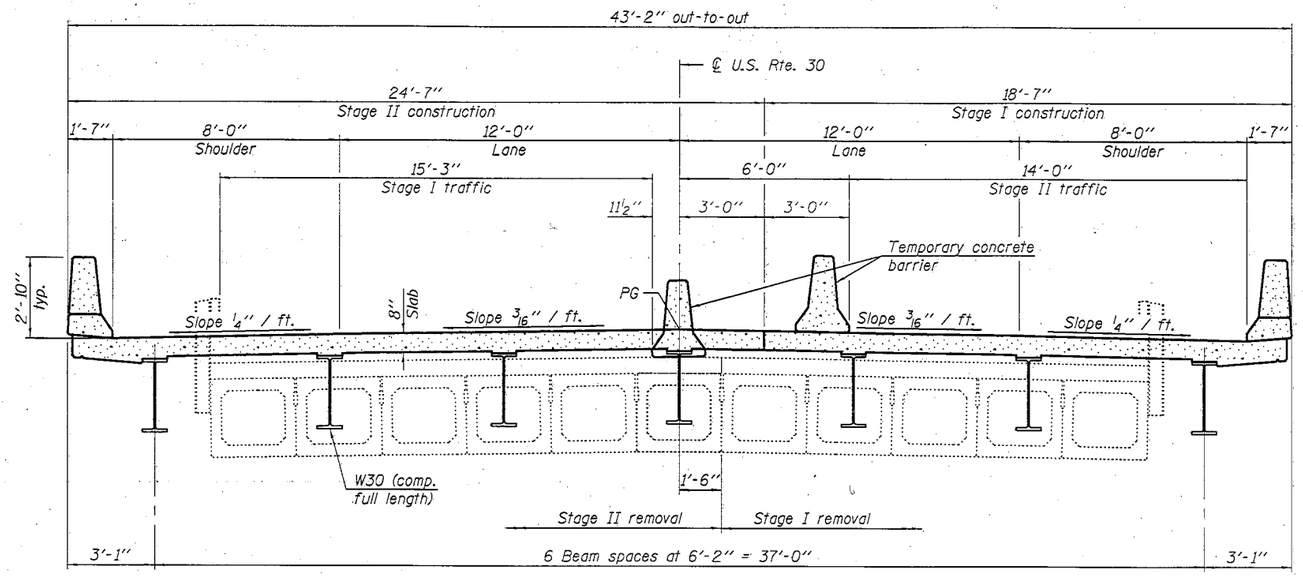


## CROSS SECTION
(Looking East)

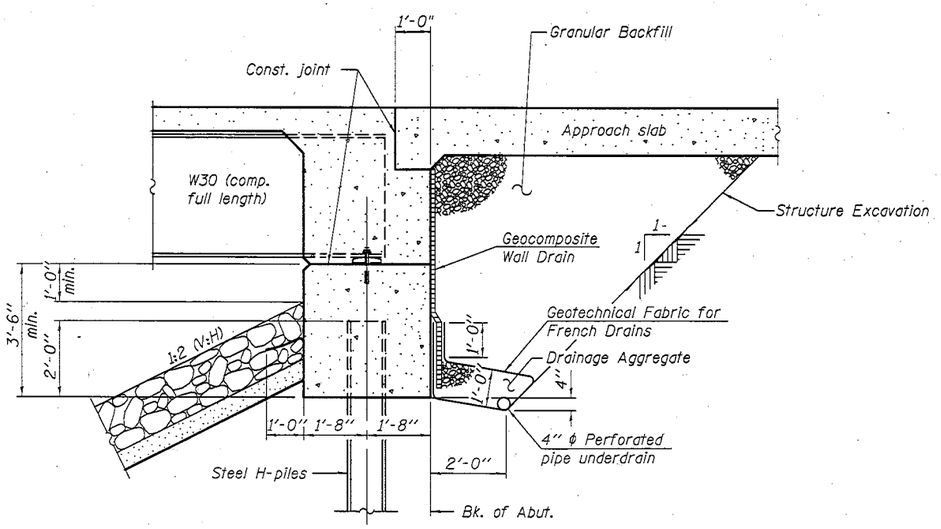


## SECTION THRU INTEGRAL ABUTMENT
(Horiz. dim. @ Rt. ∟'s)

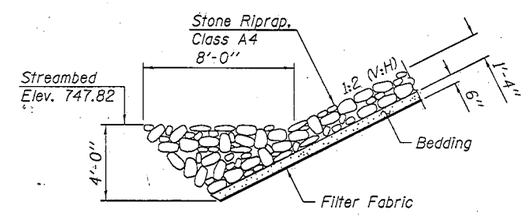


## SECTION A-A

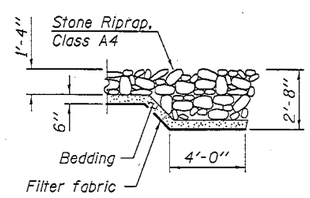


## SECTION B-B

## DETAILS
## U.S. RTE. 30 OVER SOMONAUK CREEK
## F.A.P. RTE. 573 - SEC. (116R-2BR)BR
## DEKALB COUNTY
## STATION 709+67.38
## STRUCTURE NO. 019-0049

| | | |
|---|---|---|
| DESIGNED | - | RICHARD J. CHAPUT |
| CHECKED | - | SEAN CHAU |
| DRAWN | - | MICHAEL B. MOSSMAN |
| CHECKED | - | MARCUS K. CHRISTENSEN |

3-22-2013

**STATE OF ILLINOIS**
**DEPARTMENT OF TRANSPORTATION**

SHEET NO. 2 OF 2 SHEETS

| F.A.P. RTE. | SECTION | COUNTY | TOTAL SHEETS | SHEET NO. |
|---|---|---|---|---|
| 573 | (116R-2BR)BR | DEKALB | ____ | ____ |
| | | CONTRACT NO. 66A90 | | |
| | | ILLINOIS FED. AID PROJECT | | |