Benchmark: Chiseled "□" on top of SE wingwall of S.N. 020-0047; Sta. 1437+21.63, 14.79' Rt., Elev. 718.78

Existing Structure: S.N. 020-0046 built in 1980 as F.A. Route 52, Section 54BR-1 at Sta. 1423+20.60. The existing structure consists of a single span precast prestressed concrete deck beam superstructure supported on closed abutments with metal shell piles. Back-to-back of abutment length is 64'-0" and out-to-out width of deck is 42'-0". The existing superstructure is to be removed and replaced. Traffic is to be maintained using stage construction.

No Salvage.

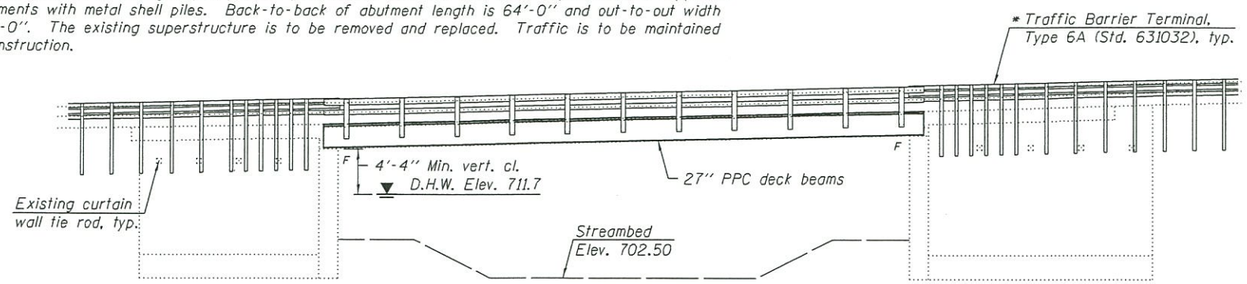

ELEVATION

* The terminal posts shall be spaced to miss the existing curtain wall tie rods and shall be verified by the Contractor.

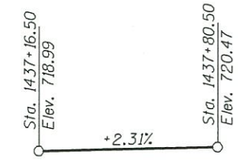

PROFILE GRADE

(Along ℄ Northbound F.A.P. Rte. 322)

WATERWAY INFORMATION

Drainage Area = 8.30 mi.²

Existing Low Grade Elev. 717.49 @ Sta. 1435+37
Proposed Low Grade Elev. 717.49 @ Sta. 1435+37

Flood	Freq. Yr.	Q C.F.S.	Opening Sq. Ft. Exist.	Opening Sq. Ft. Prop.	Nat. H.W.E.	Head - Ft. Exist.	Head - Ft. Prop.	Headwater El. Exist.	Headwater El. Prop.
	10	-	-	-	-	-	-	-	-
Design	50	1680	425	425	711.7	0.7	0.8	712.4	712.5
Base	100	1930	456	456	712.1	0.8	0.8	712.9	712.9
Max. Calc.	500	2504	534	534	713.1	1.0	1.0	714.1	714.1

Information per 1985 as-built construction plans.
Elevations adjusted from NGVD29 (assumed) to NAVD88.

DESIGN SCOUR ELEVATION TABLE

Design Scour Elevation (ft.)	S. Abut.	N. Abut.
	702.91	702.89

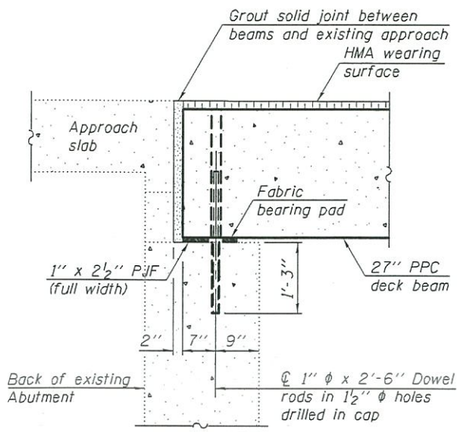

SECTION THRU EXISTING ABUTMENT

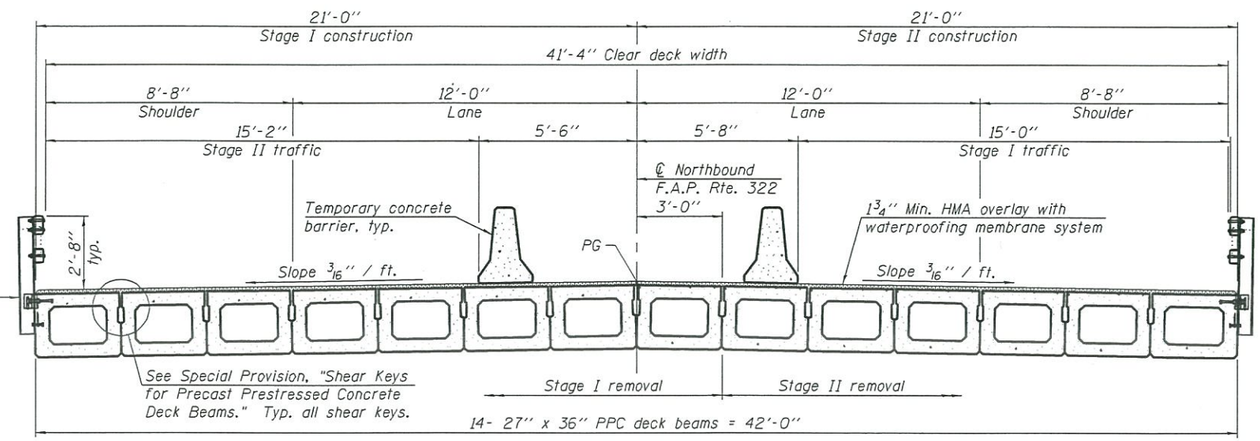

CROSS SECTION

(Looking North)

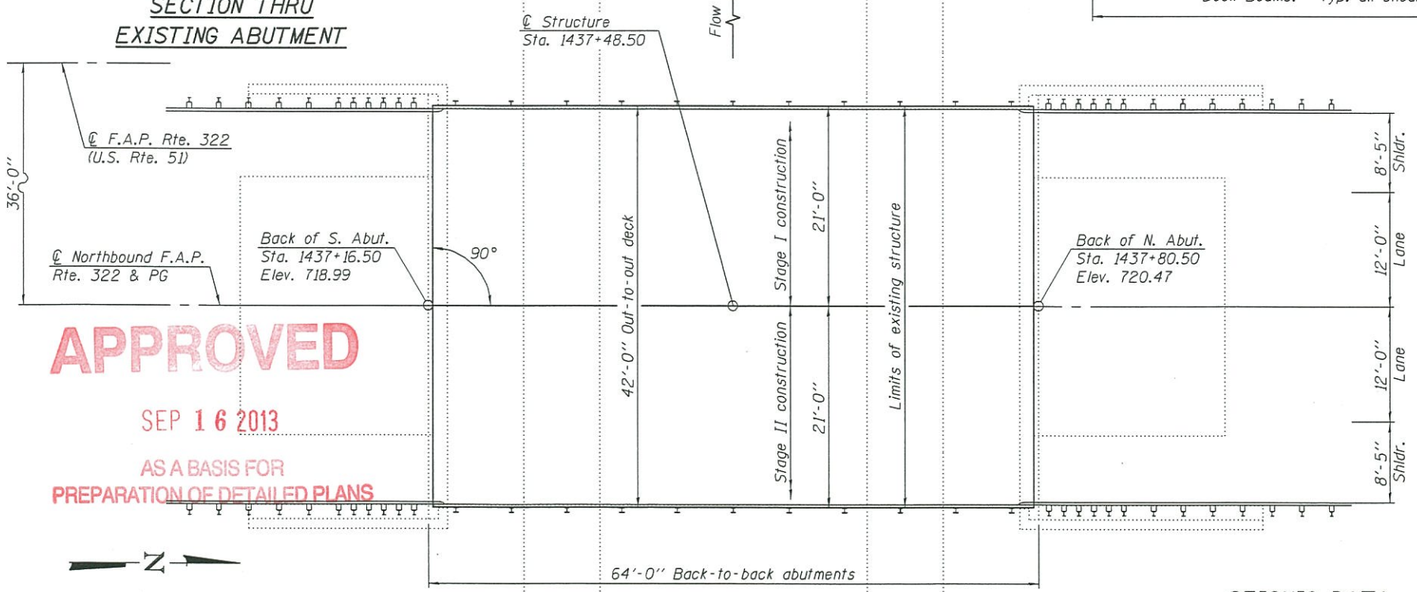

PLAN

HIGHWAY CLASSIFICATION

F.A.P. Rte. 322 - U.S. Rte 51
Functional Class: Other Principal Arterial
ADT: 5300 (2011); 6550 (2031)
ADTT: 858 (2031)
DHV: 628
Design Speed: 70 m.p.h.
Posted Speed: 65 m.p.h.
One-Way Traffic
Directional Distribution: 100:0

LOADING HL-93

Allow 50#/sq. ft. for future wearing surface.

DESIGN SPECIFICATIONS

2012 AASHTO LRFD Bridge Design Specifications, 6th Edition with 2013 Interims
1995 Seismic Retrofitting Manual for Highway Bridges FHWA-RD-94/052

DESIGN STRESSES

FIELD & EXISTING UNITS

f'c = 3,500 psi
fy = 60,000 psi (reinforcement)

PRECAST PRESTRESSED UNITS

f'c = 6,000 psi
f'ci = 5,000 psi
fpu = 270,000 psi (½" ϕ low lax strands)
fpbt = 201,960 psi (½" ϕ low lax strands)

SEISMIC DATA

(500 Year return per AASHTO Standard Specifications)
Seismic Performance Category (SPC) = A
Bedrock Acceleration Coefficient (A) = 0.046g
Site Coefficient (S) = 1.5

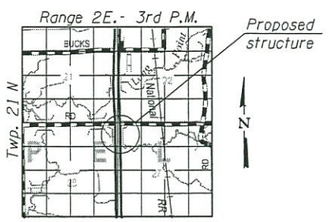

LOCATION SKETCH

APPROVED
SEP 16 2013
AS A BASIS FOR PREPARATION OF DETAILED PLANS

GENERAL PLAN AND ELEVATION
NORTHBOUND U.S. ROUTE 51 OVER TRIBUTARY OF LONG POINT CREEK
F.A.P. RTE. 322 - SEC. 54B-2
DEWITT COUNTY
STATION 1437+48.50
STRUCTURE NO. 020-0046

DESIGNED	-	DEREK G. VERHULST
CHECKED	-	JEFFREY S. BURKE
DRAWN	-	MICHAEL B. MOSSMAN
CHECKED	-	D.G.V. / J.S.B.

SEPTEMBER 16, 2013

STATE OF ILLINOIS
DEPARTMENT OF TRANSPORTATION

SHEET NO. 1 OF 1 SHEETS

F.A.P. RTE.	SECTION	COUNTY	TOTAL SHEETS	SHEET NO.
322	54B-3, 54B-2	DEWITT		
		CONTRACT NO. 70606		
		ILLINOIS FED. AID PROJECT		