Benchmark: Bronze Disk monument on southwest wingwall of existing IL 56 bridge S.N. 022-0057 over the East Branch DuPage River, Elev. 683.44.
Existing Structure: None. Pedestrian traffic to be maintained during construction.

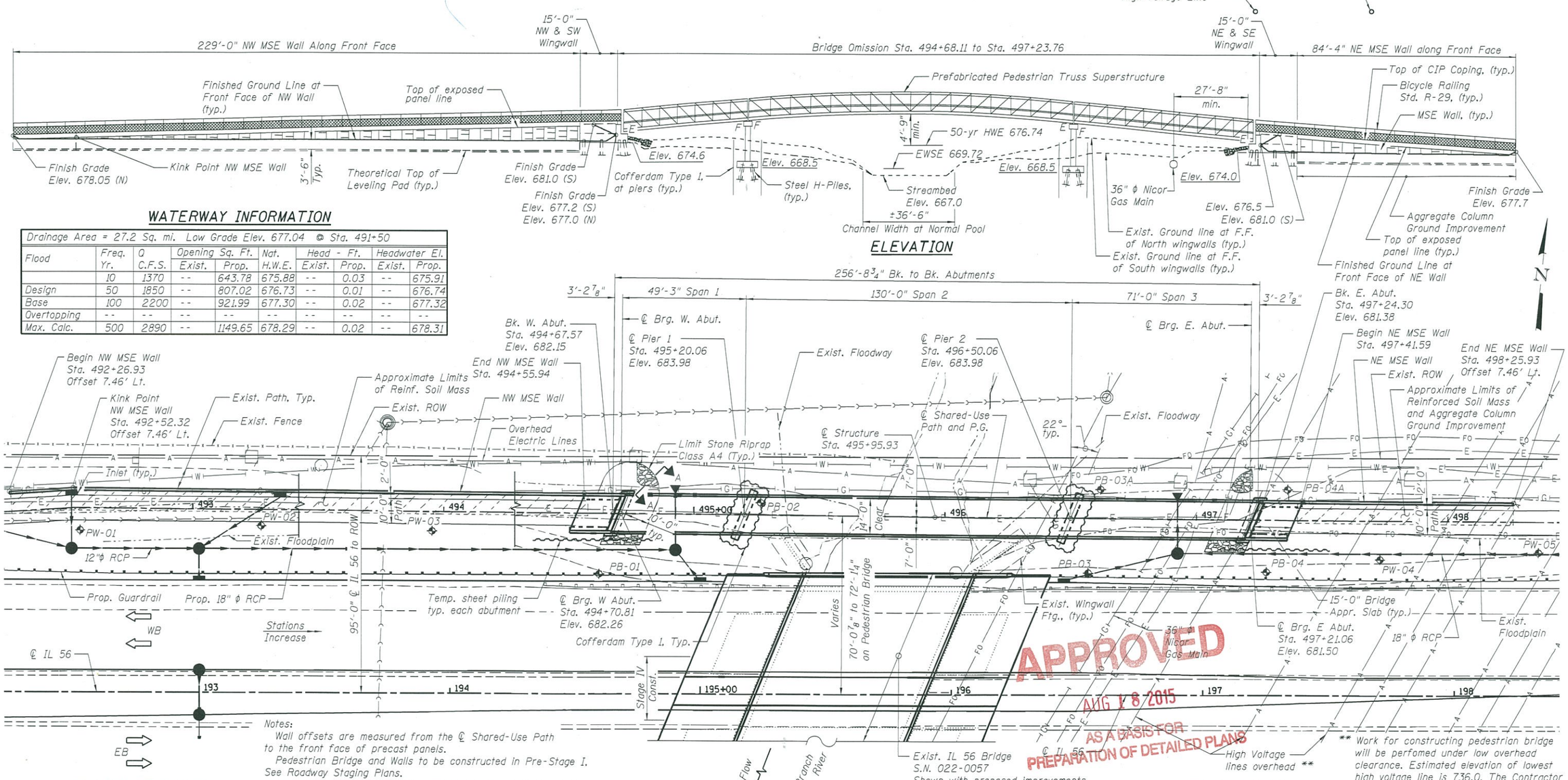

WATERWAY INFORMATION

Drainage Area = 27.2 Sq. mi. Low Grade Elev. 677.04 @ Sta. 491+50

Flood	Freq. Yr.	Q C.F.S.	Opening Sq. Ft. Exist.	Opening Sq. Ft. Prop.	Nat. H.W.E.	Head - Ft. Exist.	Head - Ft. Prop.	Headwater El. Exist.	Headwater El. Prop.
	10	1370	--	643.78	675.88	--	0.03	--	675.91
Design	50	1850	--	807.02	676.73	--	0.01	--	676.74
Base	100	2200	--	921.99	677.30	--	0.02	--	677.32
Overtopping	--	--	--	--	--	--	--	--	--
Max. Calc.	500	2890	--	1149.65	678.29	--	0.02	--	678.31

Notes:
Wall offsets are measured from the ℄ Shared-Use Path to the front face of precast panels.
Pedestrian Bridge and Walls to be constructed in Pre-Stage I. See Roadway Staging Plans.
All steel components on the pedestrian bridge shall be painted.
Pedestrian bridge shall be simple spans.

** Work for constructing pedestrian bridge will be perfomed under low overhead clearance. Estimated elevation of lowest high voltage line is 736.0. The Contractor and ComEd will need to verify clearances during construction.

APPROVED AUG 18 2015 AS A BASIS FOR PREPARATION OF DETAILED PLANS

DESIGN STRESSES

FIELD UNITS

f'c = 3,500 psi
fy = 60,000 psi (Reinforcement)
fy = 50,000 psi (M270 Grade 50)-Truss

PRECAST UNITS

f'c = 4,500 psi (Precast Panels)

SEISMIC DATA

Seismic Performance Zone (SPZ) = 1
Design Spectral Acceleration at 1.0 sec. (S_{D1}) = 0.089
Design Spectral Acceleration at 0.2 sec. (S_{DS}) = 0.158
Soil Site Class = D

DESIGN SPECIFICATIONS

AASHTO LRFD Bridge Design Specifications, 7th Edition
2009 AASHTO LRFD Guide Specifications for the Design of Pedestrian Bridges

LOADING

Pedestrian Uniform Live Loading = 90 psf
Vehicle Load = H-10
Design Wind Velocity = 90 mph
F.W.S. = 25 psf

LEGEND

Approximate Limits of Reinf. Soil Mass

DESIGN SCOUR ELEVATION TABLE

Event / Limit State	Design Scour Elevations (ft.) W. Abut.	Pier 1	Pier 2	E. Abut.	Item 113
Q100	674.6	665.9	665.0	674.0	5
Q200	674.6	666.7	664.2	674.0	
Design	674.6	665.9	665.0	674.0	
Check	674.6	666.7	664.2	674.0	

LEGEND

A	Exist. Aerial Line
E	Exist. Electric Line
x x x	Exist. Fence
FO	Exist. Fiber Optic Line
G	Exist. Gas Line
W	Exist. Water Line
	Prop. Guardrail
	Prop. Storm Sewer
	Exist. Sanitary Sewer
PW-01	Soil Boring Location

LOCATION SKETCH

GENERAL PLAN AND ELEVATION
PEDESTRIAN BRIDGE OVER EAST BRANCH DuPAGE RIVER
SECTION 634X-N-3
DuPAGE COUNTY
STATION 495+95.93
STRUCTURE NO. 022-P069

Bollinger, Lach & Associates, Inc.
ITASCA ILLINOIS

USER NAME = NSeekic	DESIGNED - NS	REVISED -	
	CHECKED - JJI	REVISED -	
PLOT SCALE =	DRAWN - GM	REVISED -	
PLOT DATE = 8/10/2015	CHECKED - JJI	REVISED -	

STATE OF ILLINOIS
DEPARTMENT OF TRANSPORTATION

SHEET NO. 1 OF 2 SHEETS

F.A.P. RTE.	SECTION	COUNTY	TOTAL SHEETS	SHEET NO.
365	634X-N-3	DUPAGE		
		CONTRACT NO. 60P75		
		ILLINOIS FED. AID PROJECT		

FILE NAME = W:\191-134.IDOT.IL 53 at IL 56\F400_Sheets\Structural_Pedestrian TSAL\D160P75_SHT-01_General Plan Edgn

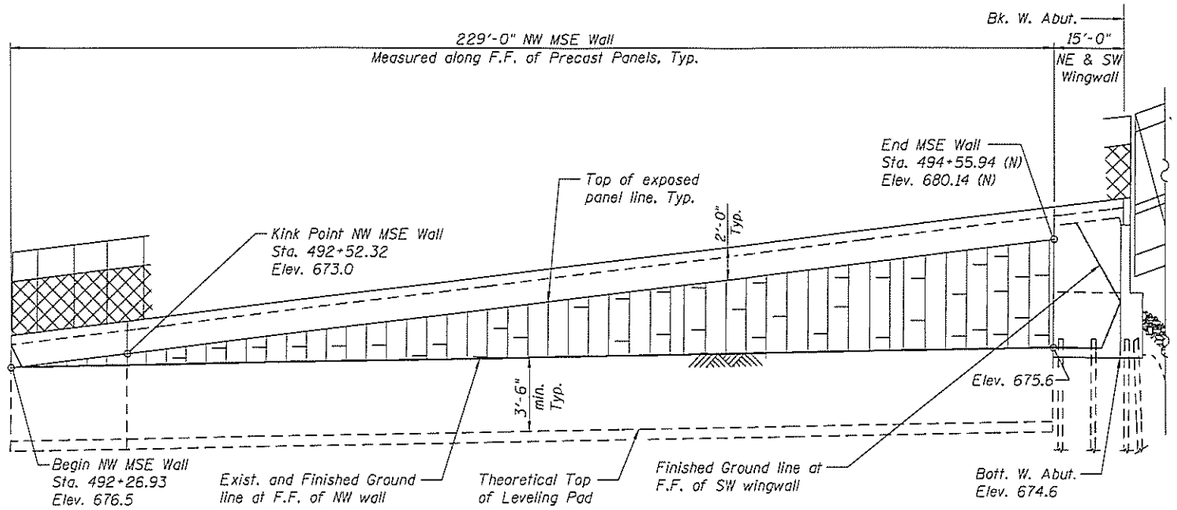

DEVELOPED NORTH WALL ELEVATIONS

Looking at Back Face of Walls
Vert.:Horiz. = 4:1

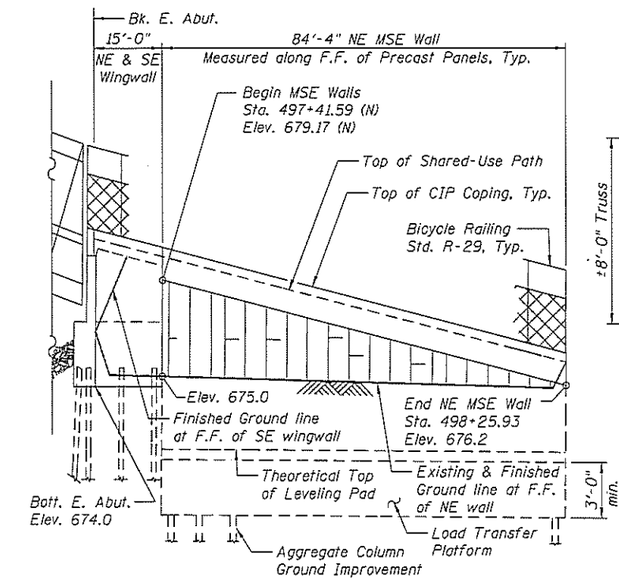

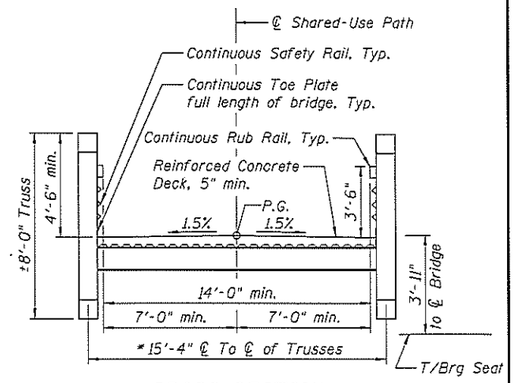

CROSS SECTION

* Subject to refinement during design

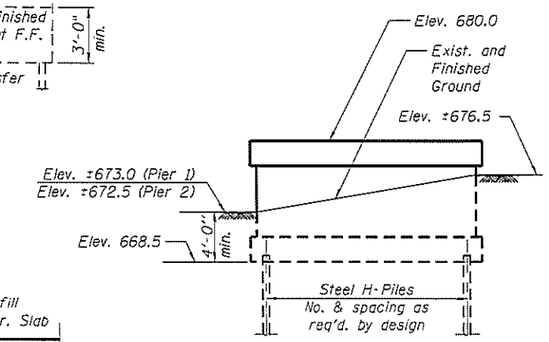

PIER SKETCH

(Looking East)

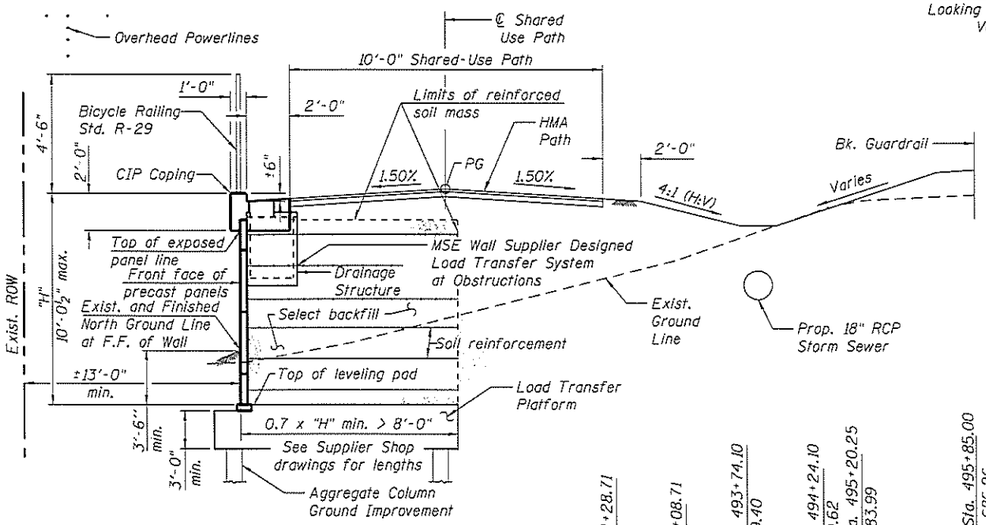

TYPICAL SECTION THRU MSE WALL

(Looking East)

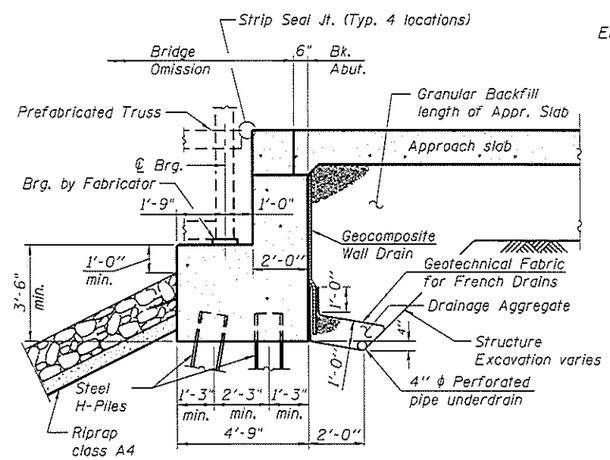

SECTION THRU PILE SUPPORTED STUB ABUTMENT

(Horiz. dim. @ Rt. L's)

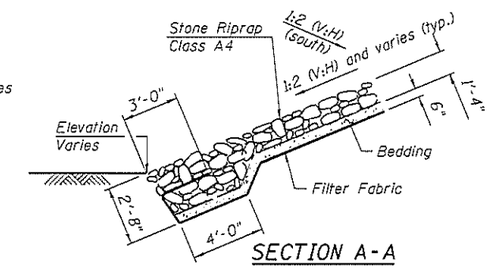

SECTION A-A

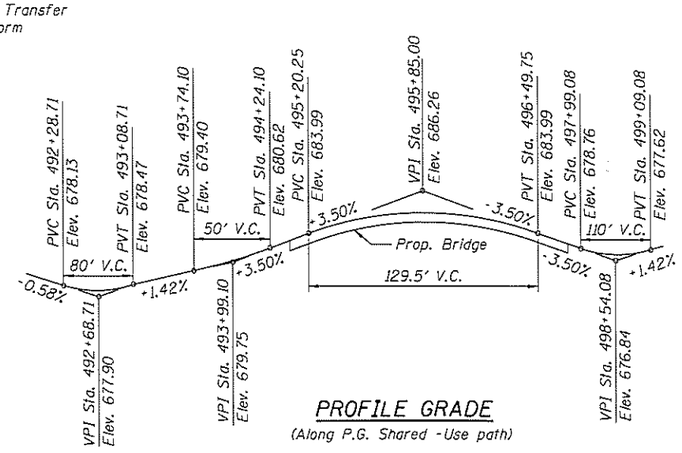

PROFILE GRADE

(Along P.G. Shared -Use path)

DETAILS
PEDESTRIAN BRIDGE OVER EAST BRANCH DuPAGE RIVER
SECTION 634X-N-3
STATION 495+97.82
STRUCTURE NO. 022-P069

FILE NAME = W:\191-134.IDOT_IL 53 at IL 56\CADD\Sheets\Structural_Pedestrian 1581\DB69P75_Sht-02_General Plan.dgn

Bollinger, Lach & Associates, Inc.
ITASCA ILLINOIS

USER NAME = NSeekie	DESIGNED - NS	REVISED -	
	CHECKED - JJI	REVISED -	
PLOT SCALE =	DRAWN - NS	REVISED -	
PLOT DATE = 8/12/2015	CHECKED - JJI	REVISED -	

STATE OF ILLINOIS
DEPARTMENT OF TRANSPORTATION

SHEET NO. 2 OF 2 SHEETS

F.A.P. RTE.	SECTION	COUNTY	TOTAL SHEETS	SHEET NO.
365	634X-N-3	DUPAGE		
		CONTRACT NO. 60P75		
		ILLINOIS FED. AID PROJECT		