Benchmark: Chiseled "□" on SE wingwall of S.N. 024-2002: Sta. 1091+12, 21.4' Rt., Elev. 415.39

Existing Structure: S.N. 024-2002 built in 1953 as SBI Route 1, Section 7-BR at Sta. 1091+10. The existing structure consists of a double barrel cast-in-place concrete box culvert with a 10 foot clear width and 12 foot clear height for each barrel. Length along culvert is 57'-0½". The existing structure is to be removed and replaced. Traffic will be maintained using stage construction.

No Salvage.

Precast alternate is not allowed.

D.H.W. Elev. 414.3

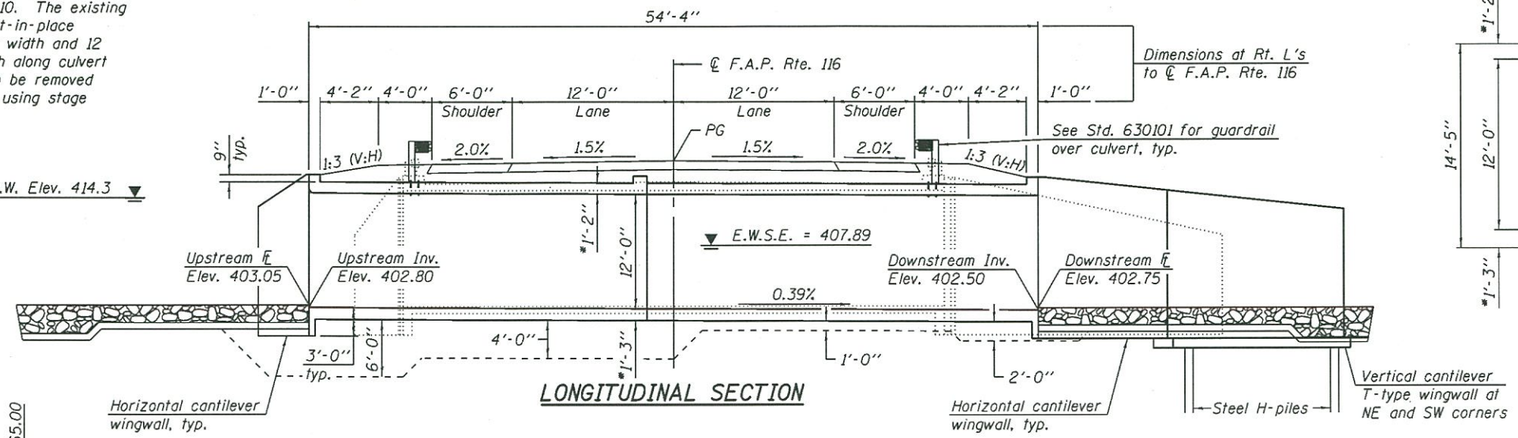

LONGITUDINAL SECTION

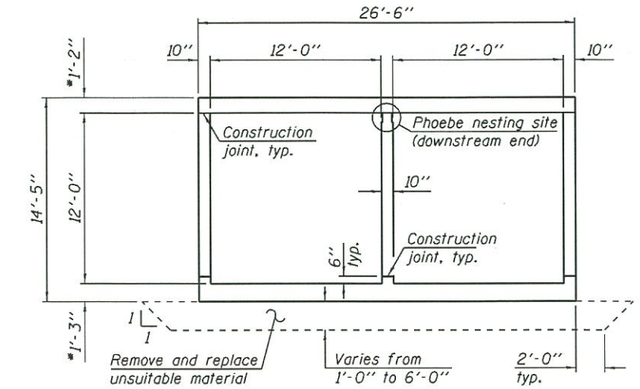

CROSS SECTION

* May be refined in final design.

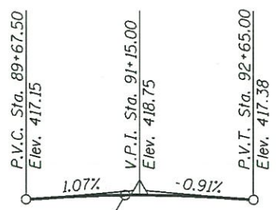

Station equation:
Sta. 91+12.50 (back) =
Sta. 91+10.00 (ahead)

300' Vert. curve

PROFILE GRADE

(Along ℄ F.A.P. Rte. 116)

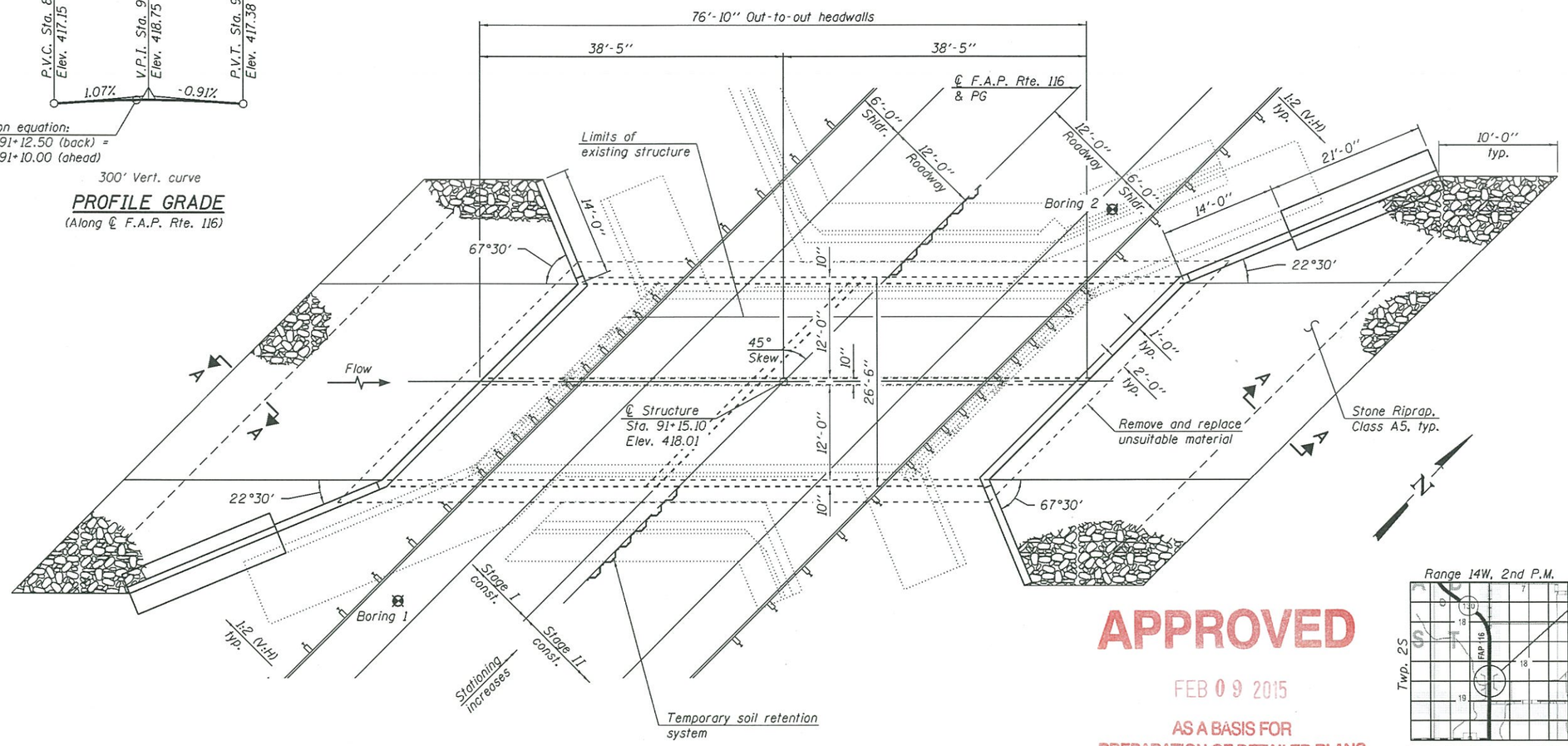

PLAN

DESIGN SPECIFICATIONS

2012 AASHTO LRFD Bridge Design Specifications, 6th Edition with 2013 Interims

DESIGN STRESSES

FIELD UNITS

f'c = 3,500 psi
fy = 60,000 psi (Reinforcement)
fy = 36,000 psi (piles)

HIGHWAY CLASSIFICATION

F.A.P. Rte. 116 - IL Rte. 130
Functional Class: Rural Minor Arterial
ADT: 3,700 (2009); 4,071 (2017)
ADTT: 800 (2009) 868 (2017)
DHV: 370
Design Speed: 60 m.p.h.
Posted Speed: 55 m.p.h.
Two-Way Traffic
Directional Distribution: 51:49

LOADING HL-93

Allow 50#/sq. ft. for future wearing surface.

Notes:
Due to shallow fill, provide waterproofing membrane system over the top of the culvert.

APPROVED
FEB 09 2015
AS A BASIS FOR PREPARATION OF DETAILED PLANS

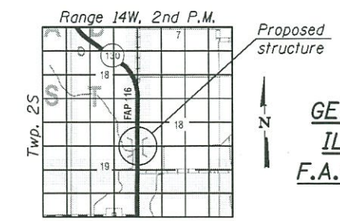

LOCATION SKETCH

GENERAL PLAN & ELEVATION
IL. RTE. 130 OVER STREAM
F.A.P. RTE. 116 - SEC. (7BR)B-1
EDWARDS COUNTY
STATION 91+15.10
STRUCTURE NO. 024-2008

DESIGNED	-	DEREK G. VERHULST
CHECKED	-	JEFFREY S. BURKE
DRAWN	-	MICHAEL B. MOSSMAN
CHECKED	-	D.G.V. / J.S.B.

FEBRUARY 5, 2015

STATE OF ILLINOIS
DEPARTMENT OF TRANSPORTATION

SHEET NO. 1 OF 2 SHEETS

F.A.P. RTE.	SECTION	COUNTY	TOTAL SHEETS	SHEET NO.
116	(7BR)B-1	EDWARDS		
		CONTRACT NO. 74354		
		ILLINOIS FED. AID PROJECT		

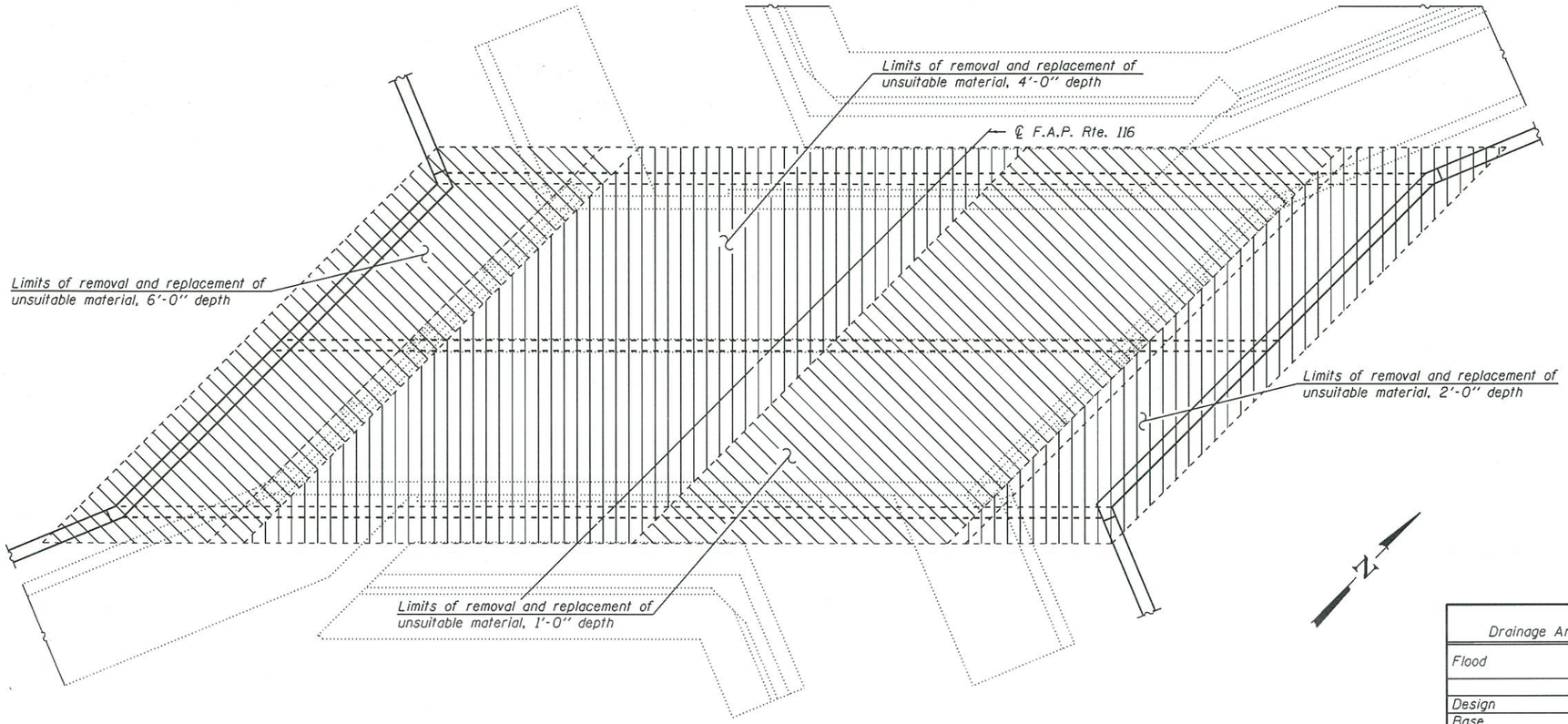

PLAN

(Showing limits of removal and replacement of unsuitable material)

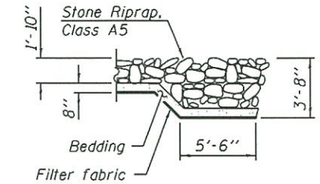

SECTION A-A

WATERWAY INFORMATION

Drainage Area = 1.98 sq. mi.
Existing Low Grade Elev. 415.97 @ Sta. 91+00.00
Proposed Low Grade Elev. 416.03 @ Sta. 99+50.00

Flood	Freq. Yr.	Q C.F.S.	Opening Sq. Ft. Exist.	Opening Sq. Ft. Prop.	Nat. H.W.E.	Head - Ft. Exist.	Head - Ft. Prop.	Headwater El. Exist.	Headwater El. Prop.
	10	1060	188	225	412.2	0.3	0.1	412.5	412.3
Design	50	1810	230	276	414.3	1.2	0.7	415.5	415.0
Base	100	2160	237	283	414.6	1.6	0.9	416.2	415.5
Overtopping Exist.	80	2060	235	-	414.5	1.5	-	416.0	-
Overtopping Prop.	205	2500	-	288	414.8	-	1.3	-	416.1
Max. Calc.	500	3050	240	288	415.2	1.3	1.3	416.5	416.5

Existing 10-year velocity = 5.63 ft./sec.
Proposed 10-year velocity = 4.71 ft./sec.

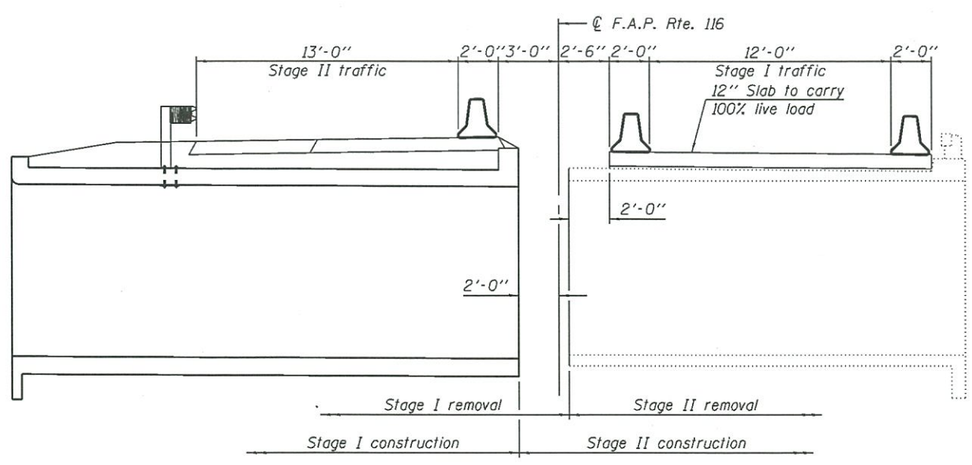

STAGE CONSTRUCTION

(Dimensions are at Rt. L's to ℄ F.A.P. Rte. 116)

Notes:
Remove existing bituminous overlay prior to installation of 12" temporary slab.
Install temporary slab prior to saw-cutting existing culvert at stage line.

APPROVED
FEB 09 2015
AS A BASIS FOR PREPARATION OF DETAILED PLANS

GENERAL PLAN & ELEVATION
IL. RTE. 130 OVER STREAM
F.A.P. RTE. 116 - SEC. (7BR)B-1
EDWARDS COUNTY
STATION 91+15.10
STRUCTURE NO. 024-2008

DESIGNED	-	DEREK G. VERHULST
CHECKED	-	JEFFREY S. BURKE
DRAWN	-	MICHAEL B. MOSSMAN
CHECKED	-	D.G.V. / J.S.B.

FEBRUARY 5, 2015

STATE OF ILLINOIS
DEPARTMENT OF TRANSPORTATION

SHEET NO. 2 OF 2 SHEETS

F.A.P. RTE.	SECTION	COUNTY	TOTAL SHEETS	SHEET NO.
116	(7BR)B-1	EDWARDS		
		CONTRACT NO. 74354		
		ILLINOIS FED. AID PROJECT		