Benchmark: 524 Chiseled "□" on top of North abutment extension at East end of Structure 025-0065, Station 1087+78.25, 21' LT, Elevation = 552.76

Existing Structure: S.N. 025-0065 was originally built in 1930 as SBI Route 128, Section 103B, consisting of a reinforced concrete superstructure on closed abutments with no skew. In 1992, the bridge was reconstructed with a wider PPC deck beam superstructure and new abutment caps placed on the original closed abutments, concrete encased H-piles supported the widened abutment cap. The existing structure length is 55'-6" back-to-back abutment and 39'-0" out-to-out width. The existing ℄ of structure is at Sta. 1088+05.58. Traffic will be detoured during construction.

Salvage: None

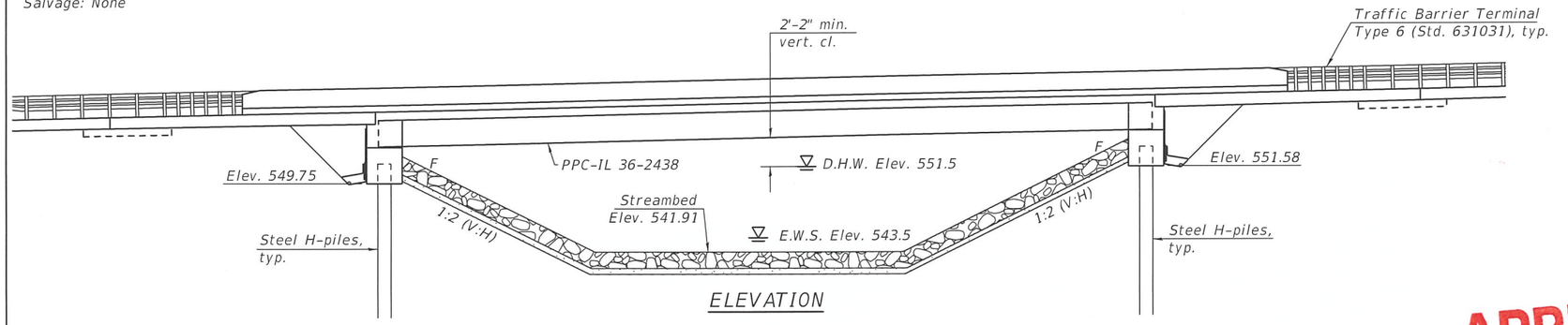

ELEVATION

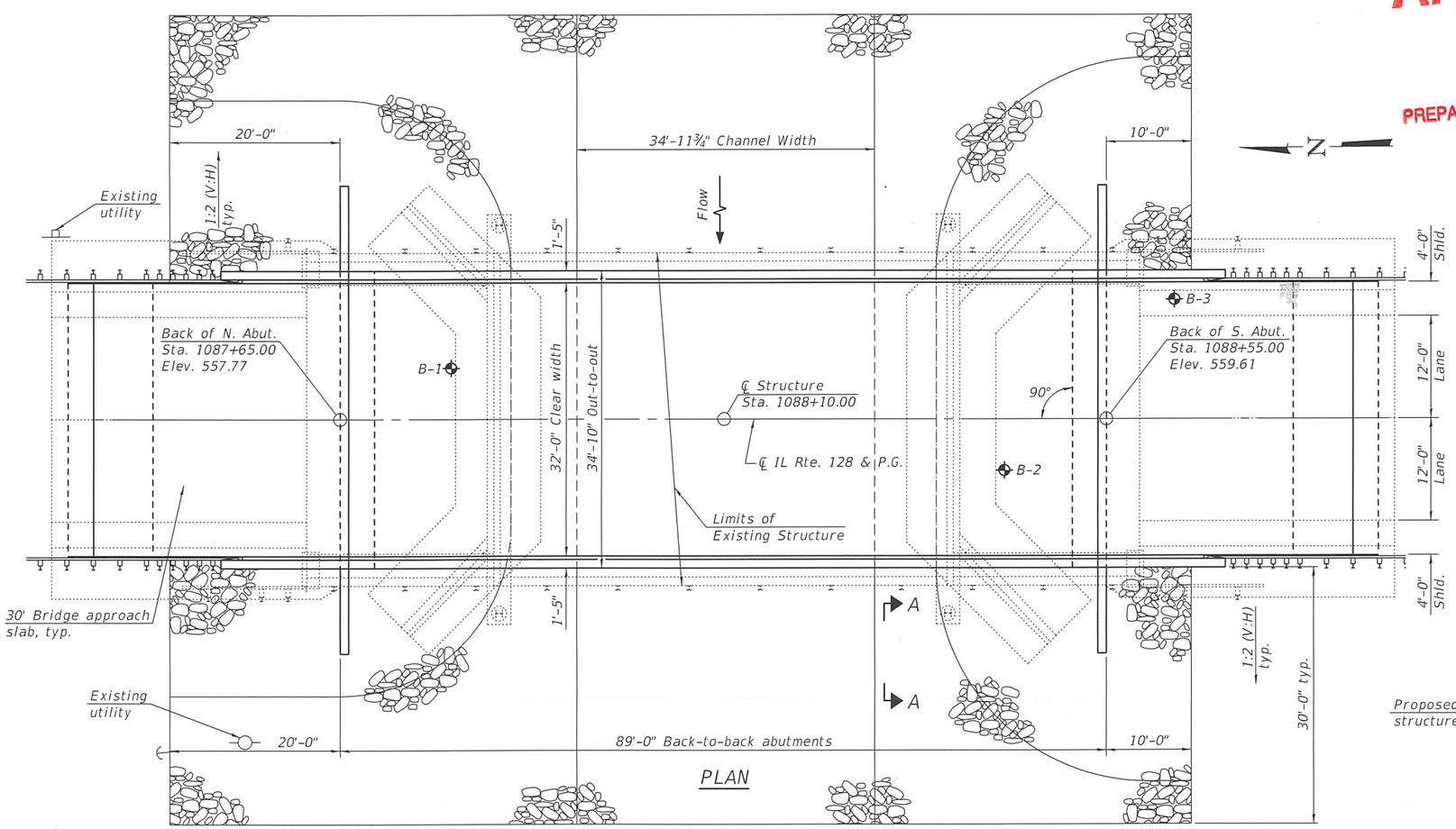

PLAN

DESIGN SPECIFICATIONS

2017 AASHTO LRFD Bridge Design Specifications, 8th Edition

DESIGN STRESSES

FIELD UNITS

f'c = 4,000 psi (superstructure)
f'c = 3,500 psi
fy = 60,000 psi (reinforcement)

PRECAST PRESTRESSED UNITS

f'c = 8,500 psi
f'ci = 6,500 psi
fpu = 270,000 psi (0.6" Ø low lax strands)
fpbt = 202,300 psi (0.6" Ø low lax strands)

HIGHWAY CLASSIFICATION

F.A.S. Rte. 2801 - IL Rte. 128
Functional Class: Major Collector
ADT: 1150 (2020); 1400 (2040)
ADTT: 237 (2020)
DHV: 132
Design Speed: 60 m.p.h.
Posted Speed: 55 m.p.h.
Two-Way Traffic
Directional Distribution: 51:49

LOADING HL-93

Allow 50#/sq. ft. for future wearing surface.

SEISMIC DATA

Seismic Performance Zone (SPZ) = 2
Design Spectral Acceleration at 1.0 sec. (SD1) = 0.211g
Design Spectral Acceleration at 0.2 sec. (SDS) = 0.469g
Soil Site Class = D

APPROVED
AUG 08 2019
AS A BASIS FOR
PREPARATION OF DETAILED PLANS

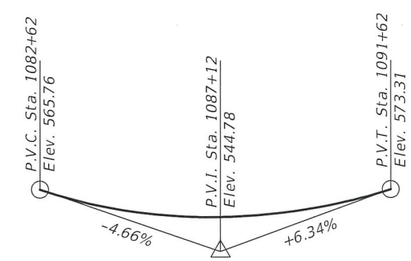

PROFILE GRADE
(Along ℄ IL Rte. 128)

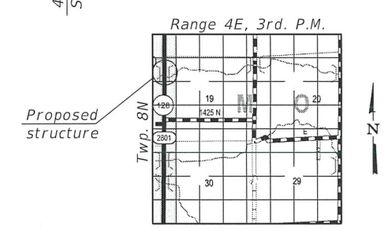

LOCATION SKETCH

GENERAL PLAN & ELEVATION
ILLINOIS ROUTE 128 OVER
BIG MOCCASIN CREEK
F.A.S. RTE. 2801 - SEC. (103BR)B-1
EFFINGHAM COUNTY
STATION 1088+10.00
STRUCTURE NO. 025-0110

DESIGNED -	AL-BARRAE R. SHEBIB
CHECKED -	CRYSTAL D. STONE
DRAWN -	JEREMY M. WALKER / D.A.P.
CHECKED -	RICHARD J. CHAPUT

8/8/2019

STATE OF ILLINOIS
DEPARTMENT OF TRANSPORTATION

SHEET NO. 1 OF 2 SHEETS

F.A.S. RTE.	SECTION	COUNTY	TOTAL SHEETS	SHEET NO.
2801	(103BR)B-1	EFFINGHAM	___	___
		CONTRACT NO. 74352		
		ILLINOIS FED. AID PROJECT		

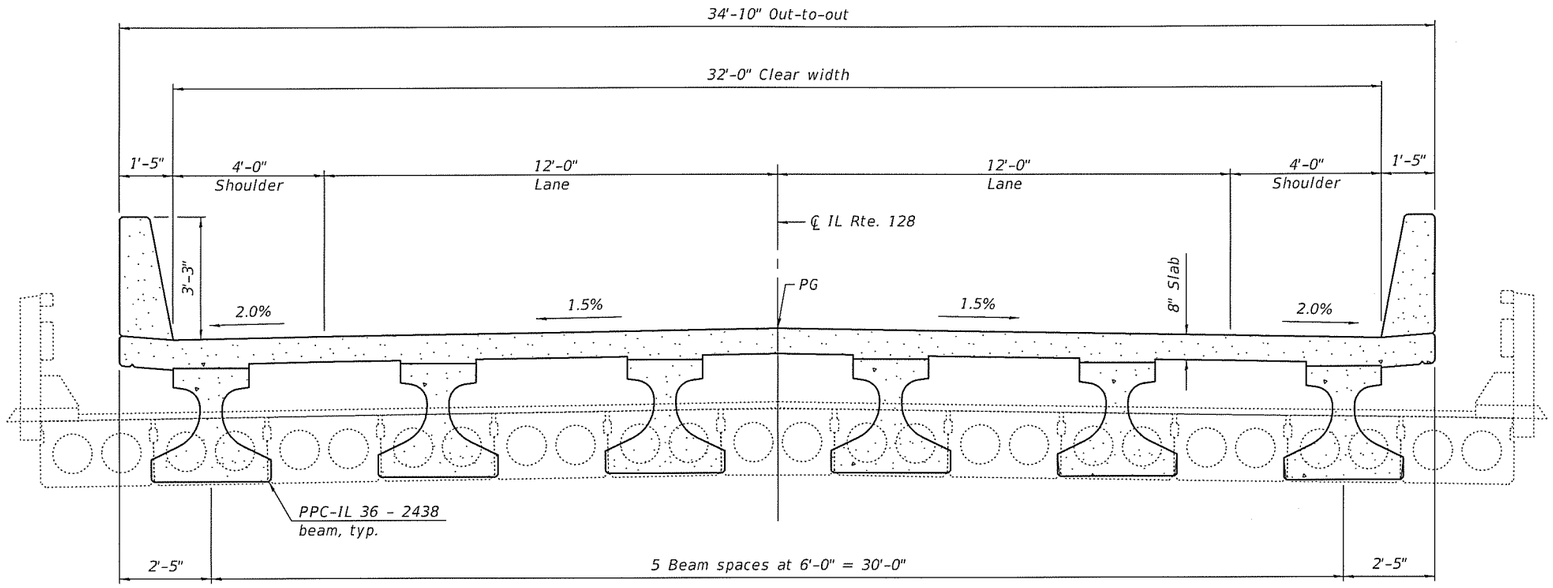

CROSS SECTION
(Looking South)

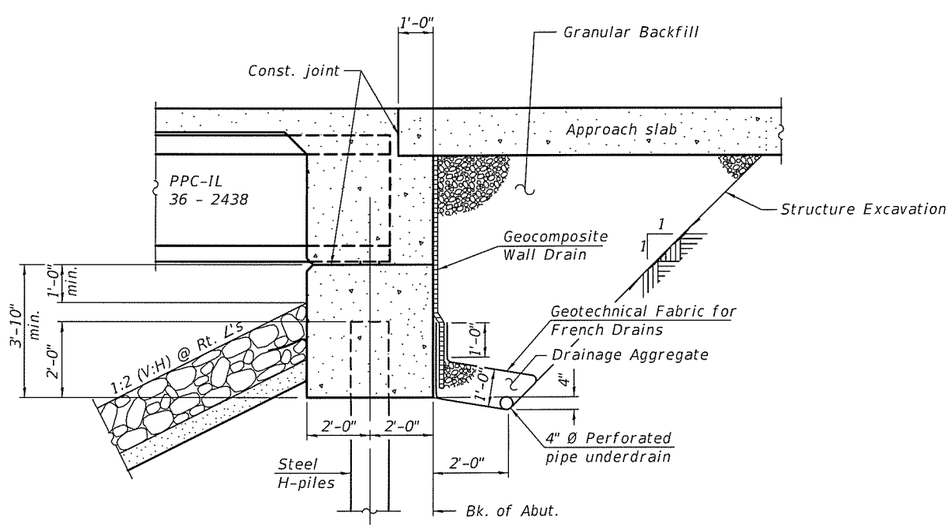

SECTION THRU INTEGRAL ABUTMENT

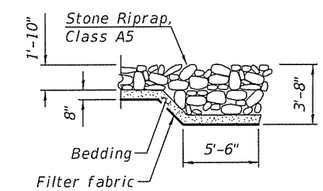

SECTION A-A

WATERWAY INFORMATION

Drainage Area = 12.6 sq. mi.

Proposed Low Grade Elev. = 556.87 @ Sta. 1086+50
Existing Low Grade Elev. = 554.03 @ Sta. 1086+90

Flood	Freq. Yr.	Q C.F.S.	Opening Sq. Ft. Exist.	Opening Sq. Ft. Prop.	Nat. H.W.E.	Head - Ft. Exist.	Head - Ft. Prop.	Headwater El. Exist.	Headwater El. Prop.
	10	2270	360	432	550.3	0.4	0.3	550.7	550.6
Design	50	3650	420	516	551.5	1.3	0.9	552.8	552.4
Base	100	4270	441	548	551.9	1.8	1.2	553.7	553.1
Overtopping Exist.	125				552.1	1.9		554.0	
Max. Calc.	500	5780	490	622	552.9	2.9	1.9	555.8	554.8

10 yr. velocity (existing) bridge = 6.31 ft./sec.
10 yr. velocity (proposed) bridge = 5.25 ft./sec.

DESIGN SCOUR ELEVATION TABLE

Event / Limit State	Design Scour Elevations (ft.) N. Abut.	S. Abut.	Item 113
Q100	549.75	551.58	8
Q200	549.75	551.58	
Design	549.75	551.58	
Check	549.75	551.58	

DETAILS
ILLINOIS ROUTE 128 OVER BIG MOCCASIN CREEK
F.A.S. RTE. 2801 - SEC. (103BR)B-1
EFFINGHAM COUNTY
STATION 1088+10.00
STRUCTURE NO. 025-0110

DESIGNED	-	AL-BARRAE R. SHEBIB
CHECKED	-	CRYSTAL D. STONE
DRAWN	-	JEREMY M. WALKER / D.A.P.
CHECKED	-	RICHARD J. CHAPUT

8/8/2019

STATE OF ILLINOIS
DEPARTMENT OF TRANSPORTATION

SHEET NO. 2 OF 2 SHEETS

F.A.S. RTE.	SECTION	COUNTY	TOTAL SHEETS	SHEET NO.
2801	(103BR)B-1	EFFINGHAM		
		CONTRACT NO. 74352		
	ILLINOIS	FED. AID PROJECT		