BENCHMARK: BM 704 - Chiseled square on southerly corner of easterly abutment of SN 033-0007 along IL 14, Sta. 77+52, 24' LT Elev. 413.90 (NAVD 88)

EXISTING STRUCTURE:
SN 033-0007 was originally built in 1922 as S.B.I. Rte. 14, Section 9B, and was widened in 1952 as S.B.I. Route 14, Section 9BY. The structure consists of a single-span cast-in-place concrete slab on closed abutments supported by spread footings. Inside face to inside face of abutments is 28'-0". Superstructure width is 42'-4" out-to-out. There is a 30° skew left-forward. Traffic shall be maintained utilizing stage construction.

No salvage.

Precast alternate is not allowed.

℄ FAP 855 CURVE DATA
PI sta. 73+10.00
Δ= 33°-40'-00" (RT)
D = 4°-55'-43"
R = 1,162.54'
T = 351.73'
L = 683.10'
E = 52.04'
S.E. = 0.04'/'
S.E. transition = sta. 75+25.00 to sta. 78+10.00
PC sta. 69+58.27
PT sta. 76+41.37
station equation 76+41.37 BK = sta. 76+65.71 AH

APPROVED
SEP 3 2014
AS A BASIS FOR PREPARATION OF DETAILED PLANS

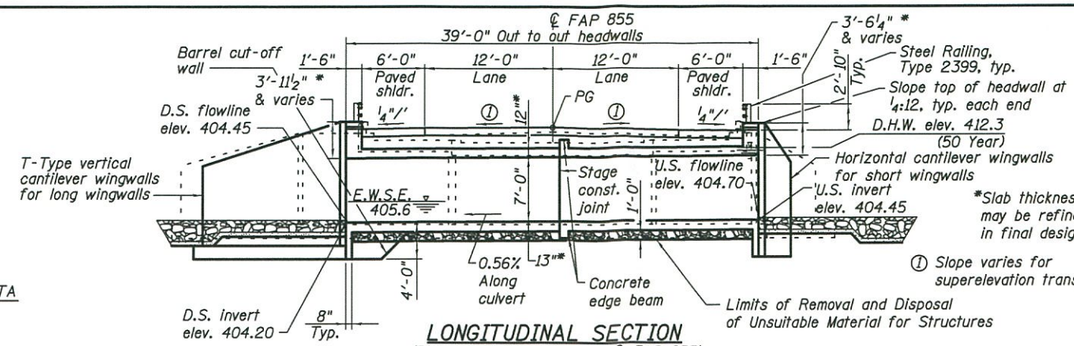

LONGITUDINAL SECTION
(Dimensions at rt. angle to ℄ FAP 855)
(Looking North)

① Slope varies for superelevation transition

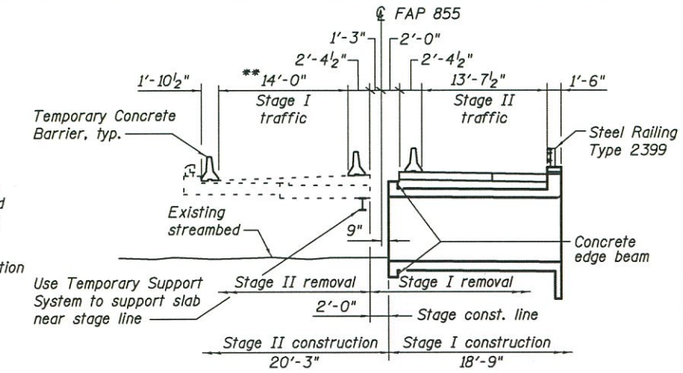

STAGE CONSTRUCTION SKETCH
(Dimensions at rt. angle to ℄ FAP 855)
(Looking North)

**Stage I traffic based on 02/02/10 structure Core Results, 05/21/10 Damage Inspection Report, and 03/03/14 field check

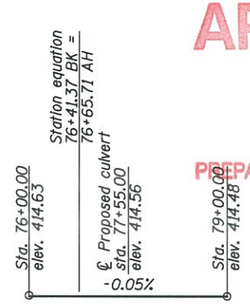

PROFILE GRADE
(Along ℄ roadway)

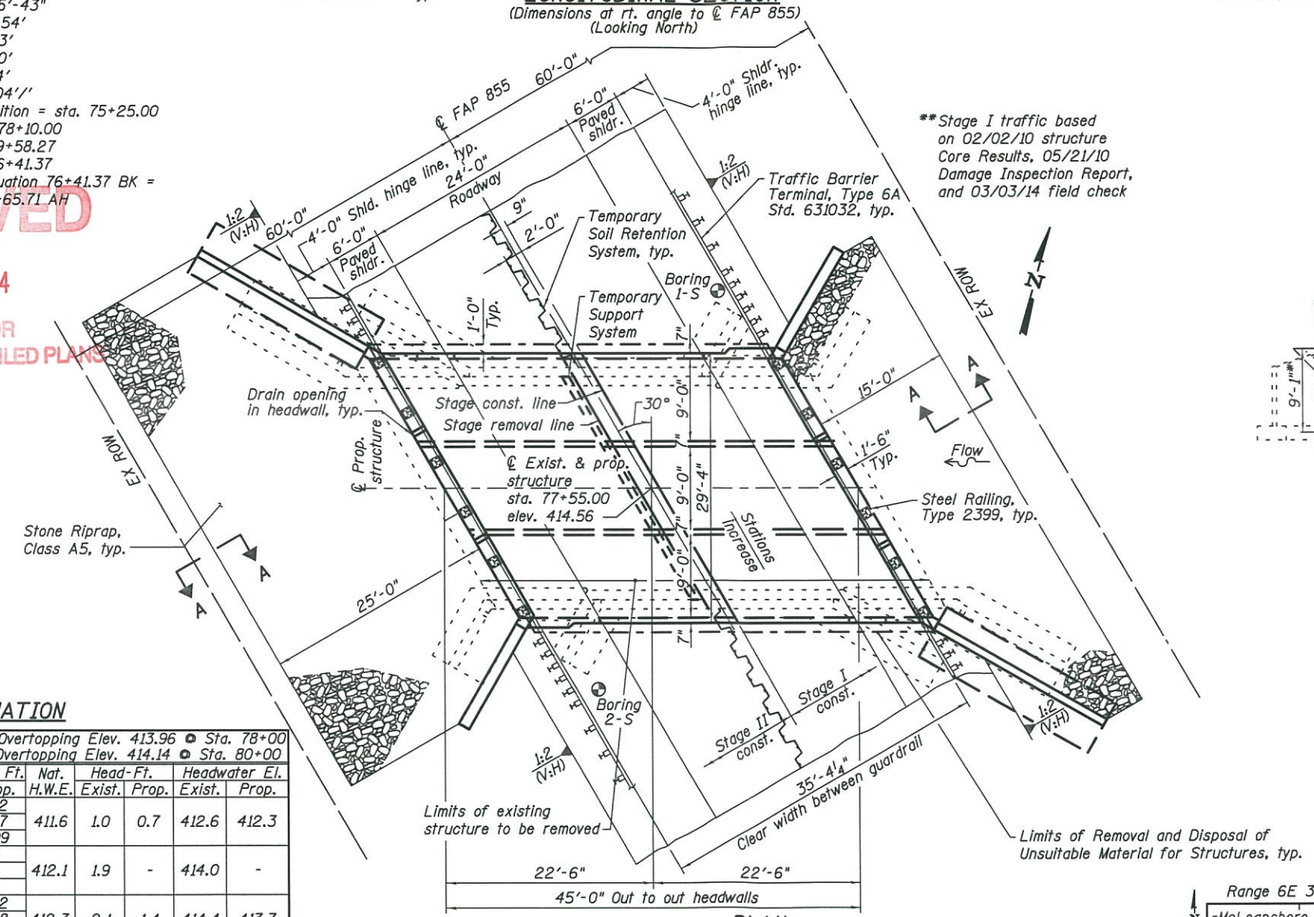

PLAN

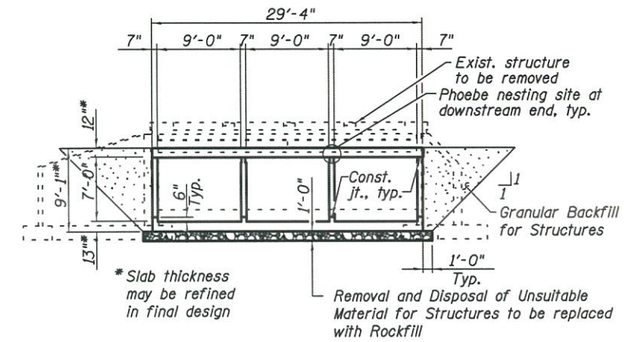

SECTION THRU BARREL
(Dimensions at rt. angle to barrel)

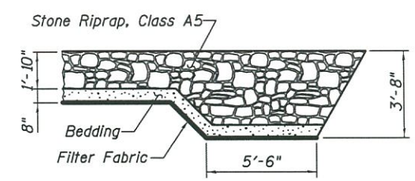

SECTION A-A

SCOUR INFORMATION

	Downstream	Upstream
Design Scour Elevation (Ft.)	400.20	400.45

WATERWAY INFORMATION

Drainage Area = 4.1 Sq. Mi.
Exist. Overtopping Elev. 413.96 @ Sta. 78+00
Prop. Overtopping Elev. 414.14 @ Sta. 80+00

	Freq. Yr.	Exist. SN	Q-C.F.S. Exist.	Q-C.F.S. Prop.	Opening-Sq. Ft. Exist.	Opening-Sq. Ft. Prop.	Nat. H.W.E.	Head-Ft. Exist.	Head-Ft. Prop.	Headwater El. Exist.	Headwater El. Prop.
	10	SN 033-0007	953	1129	143	182	411.6	1.0	0.7	412.6	412.3
		SN 033-0006	722	546	127	127					
		Total	1675	1675	270	309					
Existing Overtop	30	SN 033-0007	1363	1542	148	-	412.1	1.9	-	414.0	-
		SN 033-0006	1133	954	142	-					
		Total	2496	2496	290	-					
Design	50	SN 033-0007	1517	1663	148	182	412.3	2.1	1.4	414.4	413.7
		SN 033-0006	1272	1126	148	148					
		Total	2789	2789	296	330					
Proposed Overtop	60	SN 033-0007	1708	1766	-	182	412.4	-	2.0	-	414.4
		SN 033-0006	1282	1224	-	151					
		Total	2990	2990	-	333					
Base	100	SN 033-0007	1957	2000	148	182	412.5	2.2	2.0	414.7	414.5
		SN 033-0006	1339	1296	154	154					
		Total	3296	3296	302	336					
	200	SN 033-0007	2432	2455	148	182	412.6	2.3	2.2	414.9	414.8
		SN 033-0006	1417	1394	157	157					
		Total	3849	3849	305	339					

10 Year Velocity through Existing Structure: 8.7 ft/s
10 Year Velocity through Proposed Structure: 6.2 ft/s

HIGHWAY CLASSIFICATION

FAP Route 855 (IL 14)
Functional Class: Minor Arterial (Non-Urban)
ADT: 2740 (2014); 3270 (2032)
DHV: 295 (2032)
ADTT: 299 (2014); 356 (2032)
Design Speed: 55 mph
Posted Speed: 55 mph
Two Way Traffic
Directional Distribution: 50:50

DESIGN SPECIFICATIONS

2012 AASHTO LRFD
Bridge Design Specifications
6th Edition with 2013 Interims

LOADING HL-93

Allow 50 psf for future wearing surface.

DESIGN STRESSES

FIELD UNITS
f'c = 3,500 psi
fy = 60,000 psi (reinforcement)

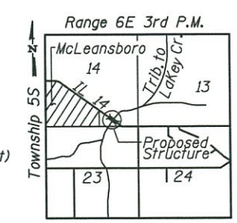

LOCATION SKETCH

GENERAL PLAN & ELEVATION
IL 14 OVER TRIBUTARY TO LAKEY CREEK
FAP ROUTE 855 - SECTION 9B-1
HAMILTON COUNTY
STATION 77+55.00
STRUCTURE NO. 033-2013

ESCA CONSULTANTS, INC.

USER NAME = has	DESIGNED - SHL	02/14	REVISED -	STATE OF ILLINOIS DEPARTMENT OF TRANSPORTATION	
ESCA PROJECT NO. 1835.82	CHECKED - ELH	08/14	REVISED -		
PLOT SCALE = 8:2 ':' / in.	DRAWN - DWH	02/14	REVISED -		
PLOT DATE = 8/26/2014 7:32:38 AM	CHECKED - RDP	08/14	REVISED -		SHEET NO. 1 OF 1 SHEETS

F.A.P. RTE.	SECTION	COUNTY	TOTAL SHEETS	SHEET NO.
855	9B-1	HAMILTON	-	-
		CONTRACT NO. 78343		
		ILLINOIS FED. AID PROJECT		

PRINT DRIVER = LPD_E_B_Bw1.prf
PEN TABLE = ESCA.tbl
PLOT NAME = 8:2SHEET-78343-B1-TB.dgn
FILE NAME = 8:\SHEET-78343-B1-TB.dgn