Bench Mark: Railroad spike in private property on east side of IL 31 north of Ferson Creek Park entrance. Elev. 701.13

Existing Structure: S.N. 045-0019 was originally constructed in 1916 under State Aid Plan Number 45-12&1-H as a single span reinforced concrete deck girder superstructure on reinforced concrete closed abutments. The original structure was 53'-0" back-to-back abutments and 27'-0" out-to-out of deck. In 1971, the superstructure was replaced with PPC deck beams and a bituminous wearing surface, and the structure was widened to 33'-0" out-to-out of deck. The existing structure is to be removed and replaced with a single span steel plate girder superstructure on integral abutments.

Traffic to be maintained utilizing staged construction.

No Salvage.

APPROVED

MAR 11 2013

AS A BASIS FOR PREPARATION OF DETAILED PLANS

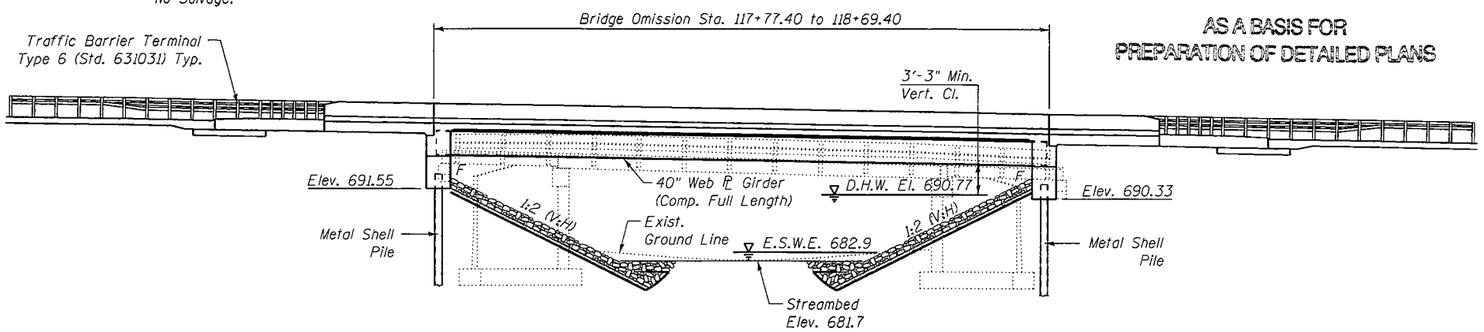

ELEVATION

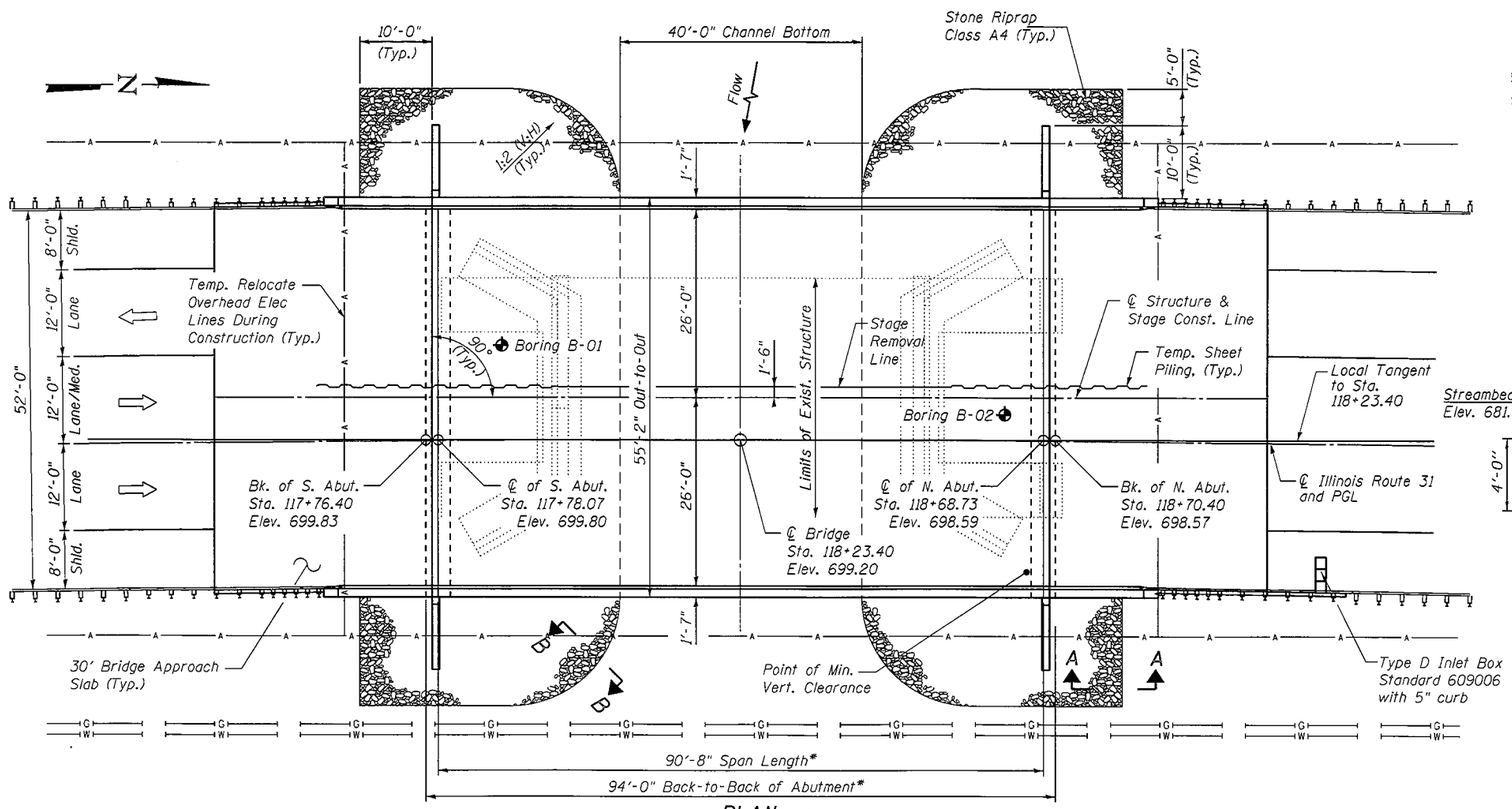

PLAN *Measured Along Local Tangent

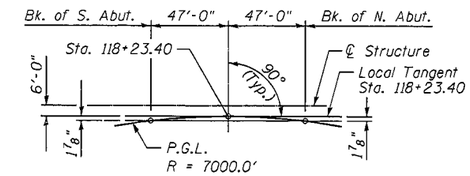

OFFSET SKETCH

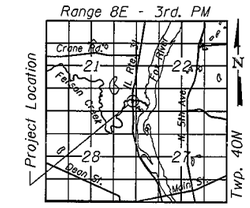

LOCATION SKETCH

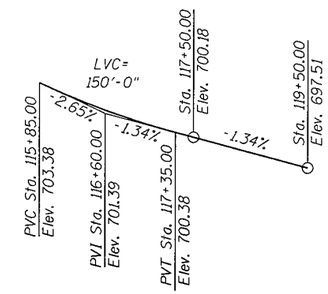

PROFILE GRADE

(Along P.G.L. IL Rte. 31)

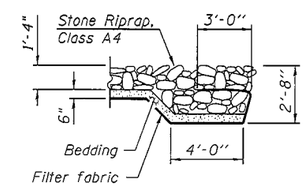

SECTION A-A

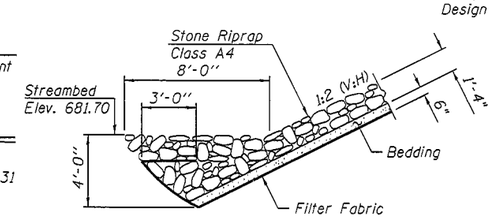

SECTION B-B

HIGHWAY CLASSIFICATION

F.A.U. Rte. 3887 - IL Rte. 31
Functional Class: Minor Arterial (Urban)
ADT: 12,700 (2011); 16,205 (2032)
ADTT: 4.0%
DHV: 1,270
Design Speed: 50 m.p.h.
Posted Speed: 45 m.p.h.
Two-Way Traffic
Directional Distribution: 50:50

DESIGN SPECIFICATIONS

2012 AASHTO LRFD Bridge Design Specifications, 6th Edition, with 2012 ERRATA

LOADING HL-93

Allow 50#/sq. ft. for future wearing surface.

DESIGN STRESSES

FIELD UNITS

f'c = 3,500 psi
fy = 60,000 psi (Reinforcement)
fy = 50,000 psi (M270 Grade 50)

SEISMIC DATA

Seismic Performance Zone (SPZ) = 1
Design Spectral Acceleration at 1.0 sec. (S_{D1}) = 0.087g
Design Spectral Acceleration at 0.2 sec. (S_{DS}) = 0.157g
Soil Site Class = D

CURVE DATA

P.I. Sta. = 117+87.48
Δ = 4° 30' 07" (RT)
D = 0° 49' 07"
R = 7,000.00'
L = 550.03'
T = 275.16'
E = 5.41'
S.E. = 0.015'/'
P.C. Sta. = 115+12.33
P.T. Sta. = 120+62.36

GENERAL PLAN
IL RTE. 31 OVER FERSON CREEK
F.A.U. RT. 3887 - SEC. I-B-1
KANE COUNTY
STATION 118+23.40
STRUCTURE NO. 045-0333

COLLINS ENGINEERS
123 N. Wacker Dr. Suite 900 Chicago, Il. 60606 (312) 704-6300 Fax (312) 704-6320 www.collinsengr.com
ILLINOIS PROFESSIONAL DESIGN FIRM LICENSE NO. 184-000993

USER NAME =	DESIGNED - JMS	REVISED	
	CHECKED - JMH	REVISED	
PLOT SCALE =	DRAWN - DR	REVISED	
PLOT DATE =	CHECKED - JMH	REVISED	

STATE OF ILLINOIS
DEPARTMENT OF TRANSPORTATION

GENERAL PLAN
STRUCTURE NO. 045-0333
SHEET NO. 51 OF 52 SHEETS

F.A.U. RTE.	SECTION	COUNTY	TOTAL SHEETS	SHEET NO.
3887	I-B-1	KANE	2	1
		CONTRACT NO. 60M81		
		ILLINOIS FED. AID PROJECT		

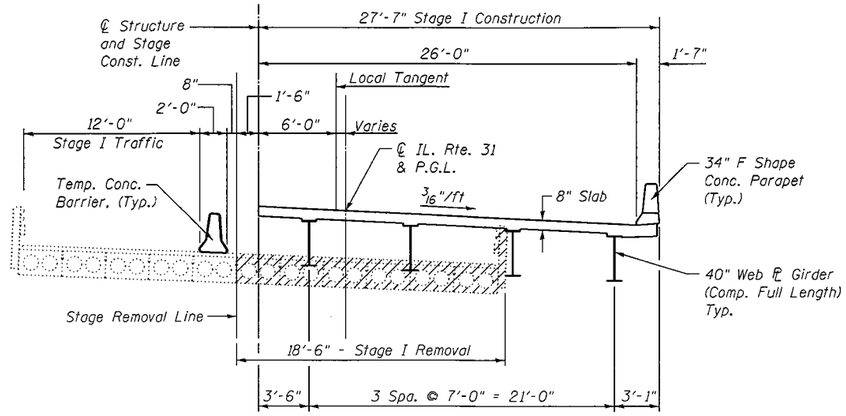

STAGE I

(Looking North)

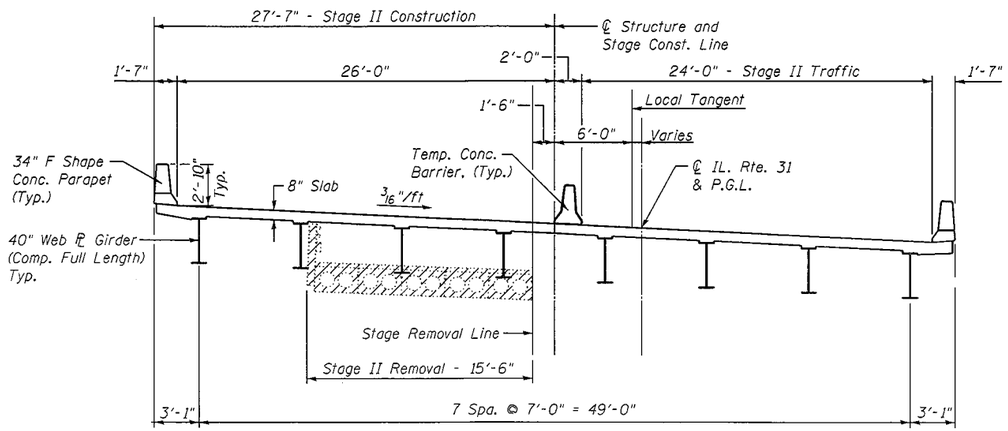

STAGE II

(Looking North)

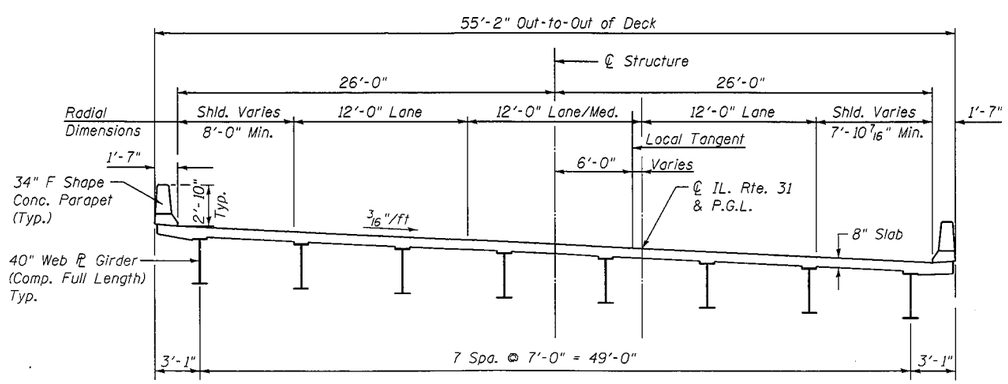

CROSS SECTION

(Looking North)

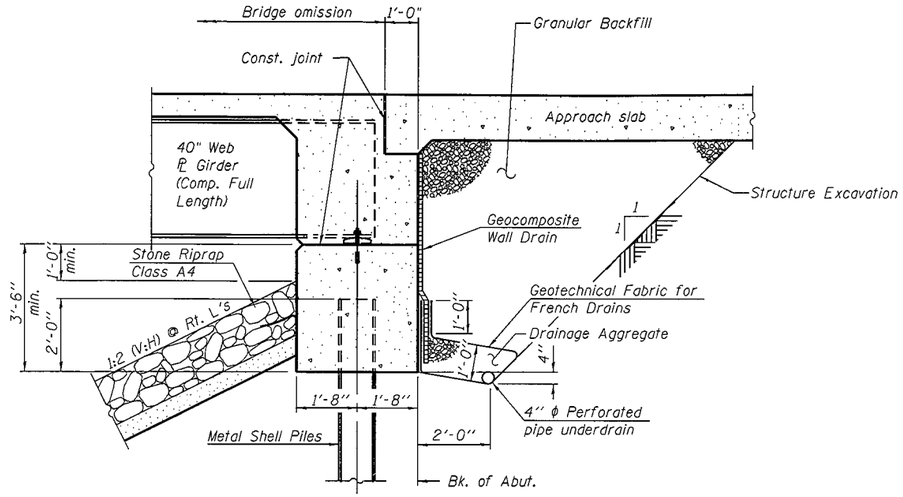

SECTION THRU INTEGRAL ABUTMENT

WATERWAY INFORMATION

Drainage Area = 54.5 Sq. Mi. Proposed Low Grade Elev. 695.9 Ft. @ Sta. 121+50

Flood	Freq. Yr.	Q C.F.S.	Opening Sq. Ft. Exist.	Opening Sq. Ft. Prop.	Nat. H.W.E.	Head - Ft. Exist.	Head - Ft. Prop.	Headwater El. Exist.	Headwater El. Prop.
	10	1959	394	439	689.42	1.42	0.56	689.84	689.98
Design	50	3486	464	543	690.77	1.24	1.10	692.01	691.87
Base	100	4020	485	576	691.19	1.10	0.91	692.29	692.10
Overtopping	200	5020	519		691.81	0.97		692.78	
Overtopping	400	5540		658	692.06		4.22		696.28
Max. Calc.	500	6430	567	712	692.68	1.44	3.87	694.12	696.55

10-Year Velocity through Proposed Bridge = 5.7 fps.

DESIGN SCOUR ELEVATION TABLE

Design Scour Elevation (ft)	S. Abut.	N. Abut.
Q100	691.55	690.33
Q500	691.55	690.33

APPROVED

MAR 11 2013

AS A BASIS FOR PREPARATION OF DETAILED PLANS

SECTIONS

IL RTE. 31 OVER FERSON CREEK

F.A.U. RT. 3887 - SEC. I-B-1

KANE COUNTY

STATION 118+23.40

STRUCTURE NO. 045-0333

COLLINS ENGINEERS 123 N. Wacker Dr. Suite 900 Chicago, IL 60606 Tel: (312) 704-9300 Fax: (312) 704-9320 www.collinseng.com
ILLINOIS PROFESSIONAL DESIGN FIRM LICENSE NO. 184-000993

USER NAME =	DESIGNED - JMS	REVISED	
	CHECKED - JMH	REVISED	
PLOT SCALE =	DRAWN - DR	REVISED	
PLOT DATE =	CHECKED - JMH	REVISED	

STATE OF ILLINOIS
DEPARTMENT OF TRANSPORTATION

SECTIONS
STRUCTURE NO. 045-0333

SHEET NO. S2 OF S2 SHEETS

F.A.U. RTE.	SECTION	COUNTY	TOTAL SHEETS	SHEET NO.
3887	I-B-1	KANE	2	2
		CONTRACT NO. 60M81		
	ILLINOIS FED. AID PROJECT			