Bench Mark: BM #12 Top of R.O.W. marker at F.D. Sign No. 3337
14.73' Left at Sta. 133+37.17. Elev. 630.29
BM #13 Chiseled square on the NW wingwall of Bridge 27.84'
Right at Sta. 135+99.36. Elev. 628.59

Existing Structure: S.N. 047-0053, originally built in 1994 as part of Section 108-BR. No known improvements have been made since construction. The existing superstructure consists of approximately 37'-10", 62'-0", and 37'-10" long continuous PPC I-Beams. The out-to-out bridge width is approximately 47'-2". The substructure consists of reinforced concrete integral abutments and encased pile bent piers, all founded on steel H-Piles. Superstructure to be removed utilizing staged construction. Substructure to remain and be reused. Abutment and pier extensions to be built to match existing types. Retaining wall to be built on top of existing abutment without superstructure.

APPROVED
AUG 21 2015
AS A BASIS FOR PREPARATION OF DETAILED PLANS

HIGHWAY CLASSIFICATION

FAP Rte. 326 - IL Rte. 47
Functional Class: SRA Suburban, Other Principal Arterial
ADT: 17,400 (2011); 33,000 (2040)
ADTT: 12% 2,090 (2011); 3,960 (2040)
DHV: 2,690 (2040)
Design Speed: 45 m.p.h.
Posted Speed: 45 m.p.h.
One-Way Traffic, Each Direction
Directional Distribution: 55:45 (SB:NB)

LOADING HL-93

Allow 50#/sq. ft. for future wearing surface

DESIGN SPECIFICATIONS

2012 AASHTO LRFD Bridge Design Specifications with 2013 Interims

DESIGN STRESSES

FIELD UNITS	EXIST. UNITS
f'c = 3,500 psi	f'c = 3,500 psi
fy = 60,000 psi (prop. & existing reinf)	
fy = 50,000 psi (M270 Grade 50W)	

SEISMIC DATA

Seismic Performance Zone (SPZ) = 1
Design Spectral Acceleration at 1.0 sec. (S_{D1}) = 0.066g
Design Spectral Acceleration at 0.2 sec. (S_{DS}) = 0.125g
Soil Site Class = C

DESIGN SCOUR ELEVATION TABLE

	S. Abut.	Pier 1	Pier 2	N. Abut.
0100	621.76	608.23	608.23	621.76
0200	621.76	608.03	608.03	621.76
0500	621.76	608.05	608.05	621.76

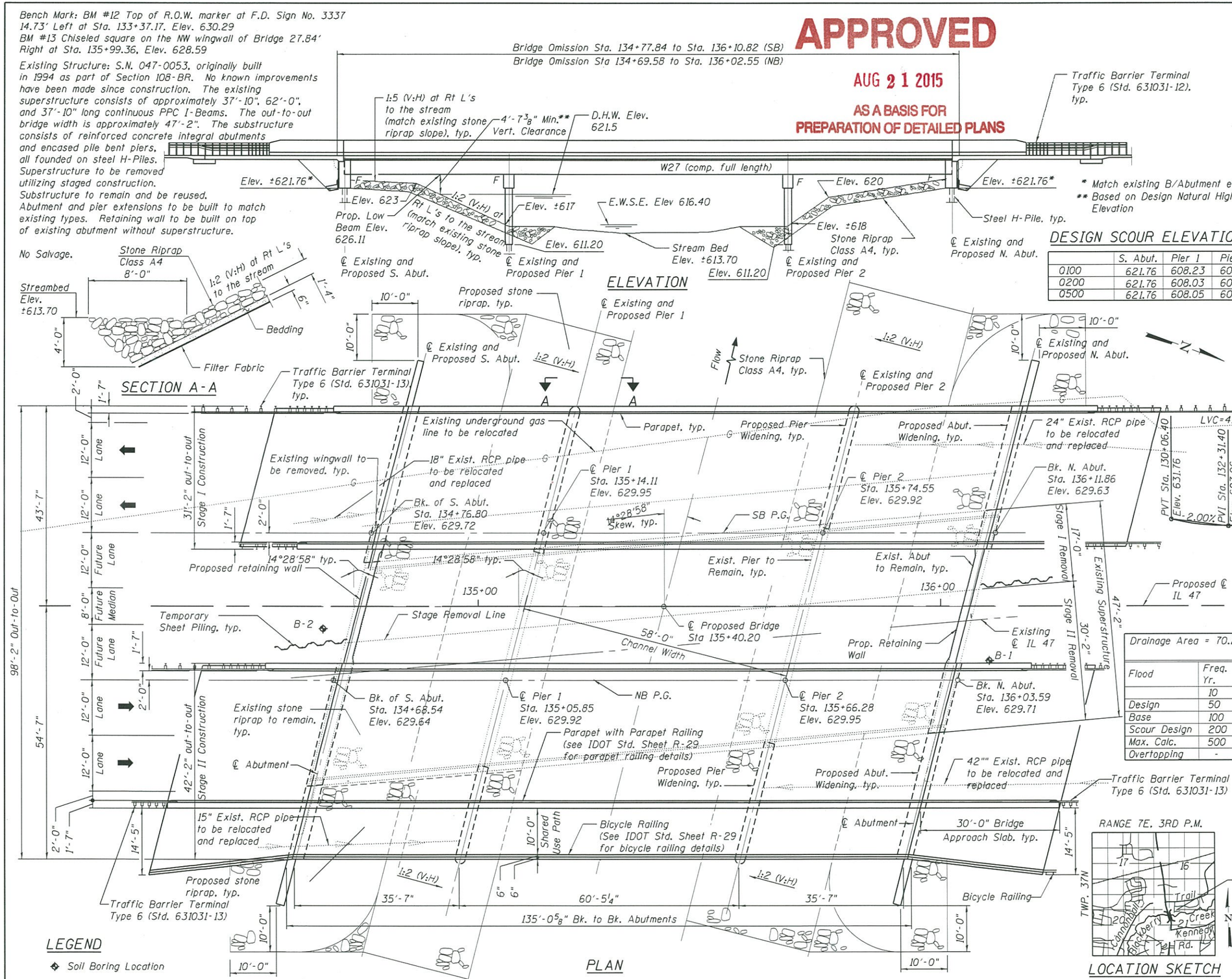

* Match existing B/Abutment elevation
** Based on Design Natural Highwater Elevation

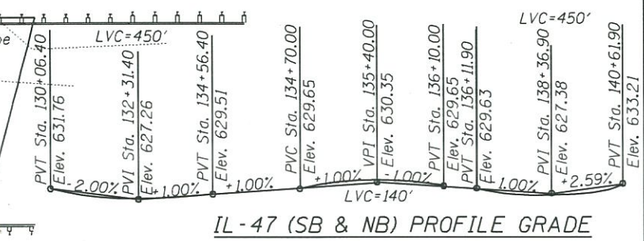

IL-47 (SB & NB) PROFILE GRADE

WATERWAY INFORMATION

Drainage Area = 70.2 sq mi Existing Low Grade Elev. 628.26 @ Sta. 132+80.00
Proposed Low Grade Elev. 628.66 @ Sta. 133+06.40

Flood	Freq. Yr.	Q C.F.S.	Opening Sq. Ft. Exist.	Opening Sq. Ft. Prop.	Nat. H.W.E.	Head - Ft. Exist.	Head - Ft. Prop.	Headwater El. Exist.	Headwater El. Prop.
	10	1366	311	360	620.2	0.2	0.1	620.4	620.2
Design	50	2284	407	471	621.5	0.3	0.1	621.8	621.6
Base	100	2749	451	520	622.0	0.5	0.2	622.4	622.1
Scour Design	200	3313	501	573	622.5	0.6	0.3	623.2	622.8
Max. Calc.	500	4026	566	639	623.2	0.8	0.4	624.0	623.6
Overtopping	-	-	-	-	-	-	-	-	-

NOTE:

For proposed R.O.W. limits, see Plan & Profile Sheets.

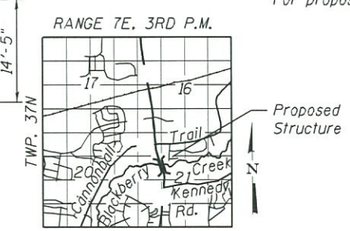

LOCATION SKETCH

LEGEND

◆ Soil Boring Location

GENERAL PLAN AND ELEVATION
ILLINOIS ROUTE 47 OVER BLACKBERRY CREEK
F.A.P. 326 - SECTION 108 BY-I
KENDALL COUNTY
STATION 135+40.20
STRUCTURE NO. 047-0053

LOCHNER	USER NAME = $USER$	DESIGNED - JSD	REVISED -	STATE OF ILLINOIS DEPARTMENT OF TRANSPORTATION	ILLINOIS ROUTE 47 OVER BLACKBERRY CREEK GENERAL PLAN AND ELEVATION	F.A.P RTE. 326	SECTION 108-SB NRH	COUNTY KENDALL	TOTAL SHEETS 2	SHEET NO. 1
H. W. LOCHNER, INC. 225 WEST WASHINGTON STREET 12 TH FLOOR CHICAGO, ILLINOIS 60606	FILE NAME =	CHECKED - RH	REVISED -		SHEET NO. 1 OF 2 SHEETS			CONTRACT NO. 66989		
	PLOT SCALE = $SCALE$	DRAWN - JSD	REVISED -					ILLINOIS FED. AID PROJECT		
	PLOT DATE = $DATE$	CHECKED - RH	REVISED -							

$FILE$

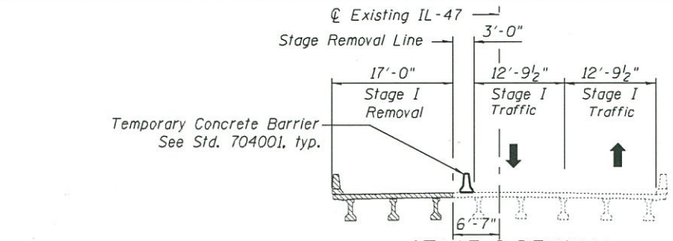

STAGE I REMOVAL

(Looking North)

(Dimensions shown are at a right angle to Existing ℄ IL-47 unless otherwise noted)

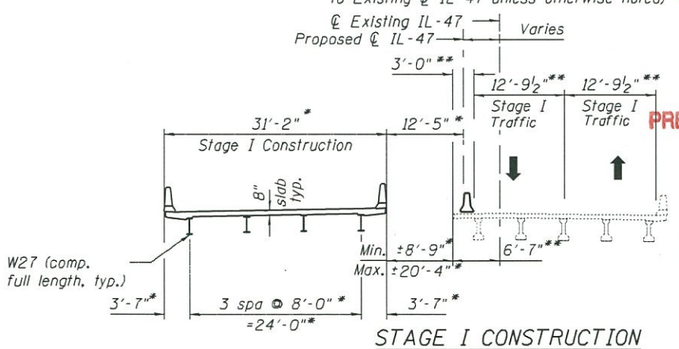

STAGE I CONSTRUCTION

(Looking North)

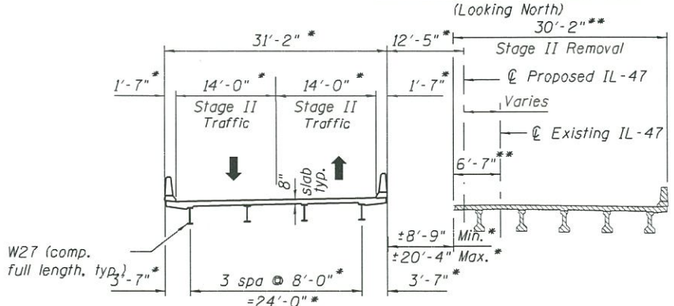

STAGE II REMOVAL

(Looking North)

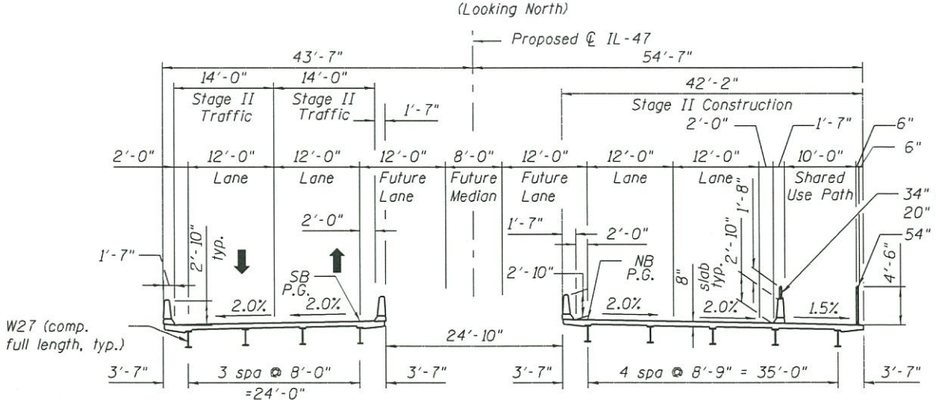

STAGE II CONSTRUCTION

(Looking North)

(Dimensions shown are at a right angle to ℄ Proposed IL-47 unless noted otherwise)

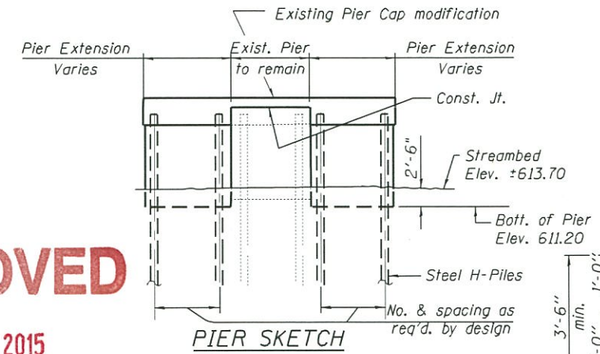

PIER SKETCH

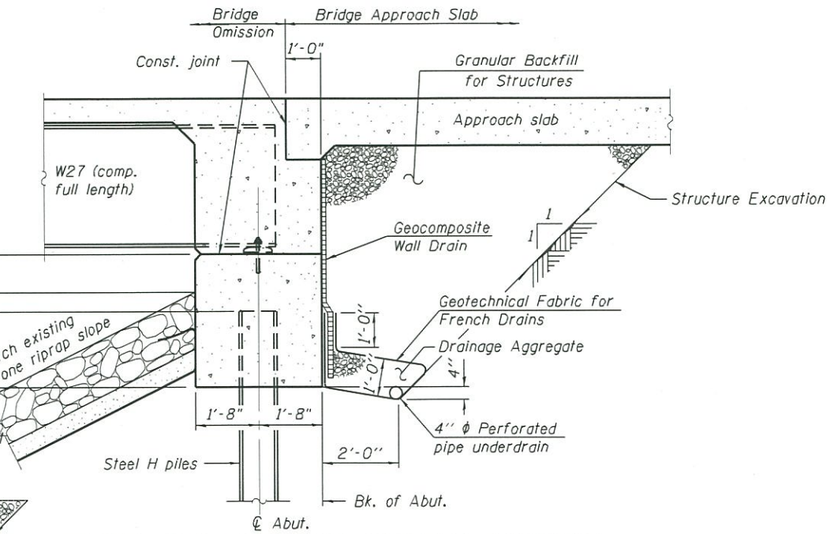

SECTION THRU PROPOSED INTEGRAL ABUTMENT

(Horiz. dim. @ Rt. L's)

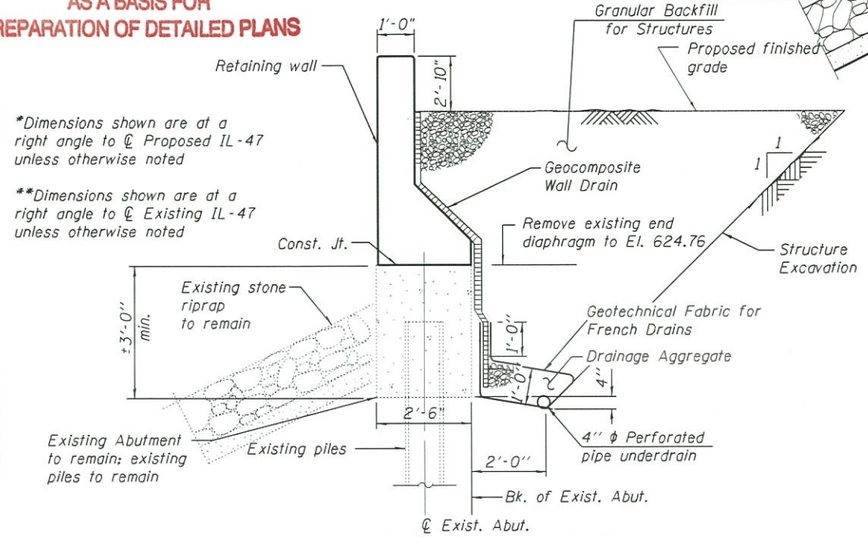

SECTION THRU EXISTING INTEGRAL ABUTMENT AT MEDIAN

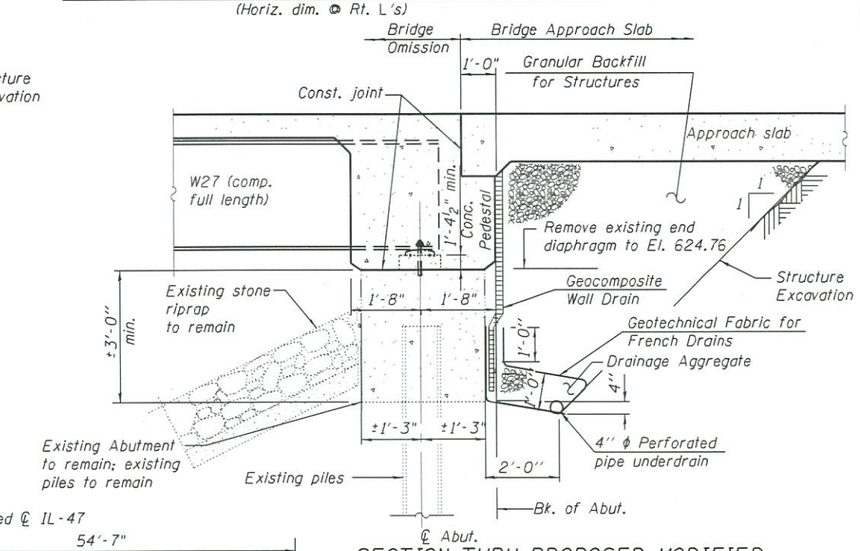

SECTION THRU PROPOSED MODIFIED EXISTING INTEGRAL ABUTMENT

(Horiz. dim. @ Rt. L's)

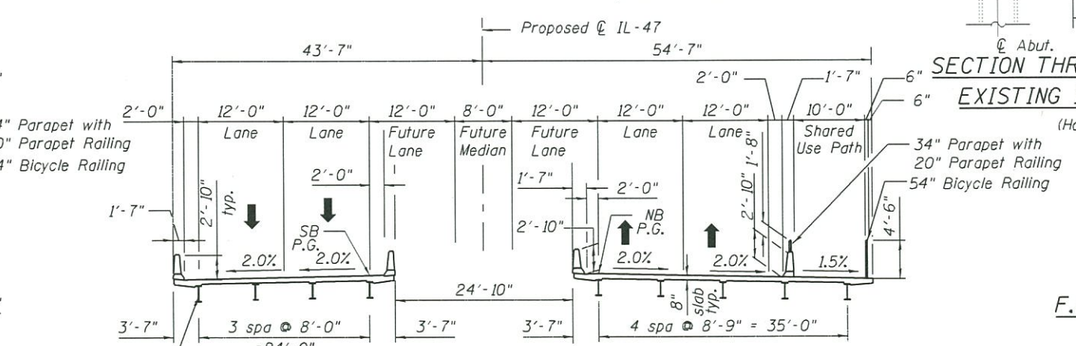

PROPOSED SECTION

(Looking North)

(Dimensions shown are at a right angle to ℄ Proposed IL-47 unless noted otherwise)

APPROVED

AUG 21 2015

AS A BASIS FOR PREPARATION OF DETAILED PLANS

*Dimensions shown are at a right angle to ℄ Proposed IL-47 unless otherwise noted

**Dimensions shown are at a right angle to ℄ Existing IL-47 unless otherwise noted

SECTIONS & DETAILS
ILLINOIS ROUTE 47 OVER BLACKBERRY CREEK
F.A.P. 326 - SECTION 108 BY-I
KENDALL COUNTY
STATION 135+40.20
STRUCTURE NO. 047-0053

LOCHNER H. W. LOCHNER, INC. 225 WEST WASHINGTON STREET 12 TH FLOOR CHICAGO, ILLINOIS 60606	USER NAME = efinowicki	DESIGNED - JSD	REVISED -	STATE OF ILLINOIS DEPARTMENT OF TRANSPORTATION	ILLINOIS ROUTE 47 OVER BLACKBERRY CREEK SECTIONS & DETAILS	F.A.P RTE.	SECTION	COUNTY	TOTAL SHEETS	SHEET NO.
	FILE NAME =	CHECKED - RH	REVISED -			326	108-SB NRH	KENDALL	2	2
	PLOT SCALE = 2:1 ' ' / in.	DRAWN - JSD	REVISED -					CONTRACT NO. 66989		
	PLOT DATE = 7/7/2015	CHECKED - RH	REVISED -		SHEET NO. 2 OF 2 SHEETS			ILLINOIS FED. AID PROJECT		

T:\4364- IL47\Structure\GGN\TS&L\Blackberry TS&Ls\4364-047B053-TSL02.dgn