Bench Mark: Chiseled "□" in N.W. corner of S.W. wingall of bridge over US Rte. 41, 48.4' Rt. of Sta. 499+57.86 Elev. 723.93.

Existing Structure: Structure Number 049-0050, originally built in 1959 as FA Rte 21 under section 12HB & 12HF. In 1970, a portion of the south fascia beam above northbound US 41 was replaced. In 1983, the deck was rehabilitated with partial and full depth repairs. The deck was water proofed and asphalt concrete overlay was provided. The east approach slabs were replaced and expansion joints were repaired. The existing handrails were replaced with 36" New Jersey Type concrete parapets. The structure is a continuous steel beam bridge supported by stub abutments and multi-column piers on pile supported footings. The back to back abutment length is 236'-0" and the out to out width is 89'-9¾". Stage Construction shall be utilized to maintain one lane of traffic in each direction at all times.

No salvage.

LOADING HS20-44
(New Const.)
Allow 25 psf for future wearing surface

DESIGN SPECIFICATIONS
(New Const.)
2002 AASHTO Standard Specifications, 17th Edition

DESIGN STRESSES
FIELD UNITS
f'c = 3,500 psi
fy = 60,000 psi (Reinforcement)
fy =50,000 psi (Bearing Components AASHTO M270 Gr. 50)
fy =36,000 psi (Structural Steel AASHTO M270 Gr. 36)

EXISTING
fc = 1,200 psi (Superstructure)
fc = 800 psi (Substructure)
fs = 18,000 psi (Structural Steel)
fs = 20,000 psi (Reinforcement)

SEISMIC DATA
Seismic Performance Category (SPC) = A
Bedrock Acceleration Coefficient (A) = 0.04g
Site Coefficient (S) = 1.0

HIGHWAY CLASSIFICATION
Rte. IL 120
Functional Class: Other Principal Arterial
ADT: 19,600 (2013); 21,370 (2032)
ADTT: 1,176 (2013); 1,282 (2032)
DHV: 1,960 (2013) / 2,137 (2032)
Design Speed: 50 m.p.h.
Posted Speed: 45 m.p.h.
Two-Way Traffic
Directional Distribution: 50:50

HIGHWAY CLASSIFICATION
Rte. US 41
Functional Class: Other Principal Arterial
ADT: 32,100 (2013); 38,732 (2032)
ADTT: 4,494 (2013); 5,423 (2032)
DHV: 3,210 (2013) / 3,873 (2032)
Design Speed: 45 m.p.h.
Posted Speed: 45 m.p.h.
Two-Way Traffic
Directional Distribution: 50:50

APPROVED
MAR 11 2015
AS A BASIS FOR PREPARATION OF DETAILED PLANS

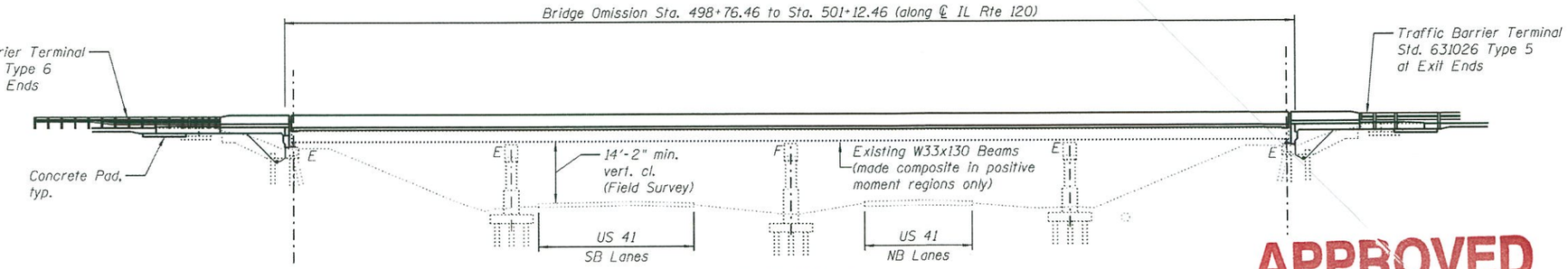

ELEVATION
(Looking North)

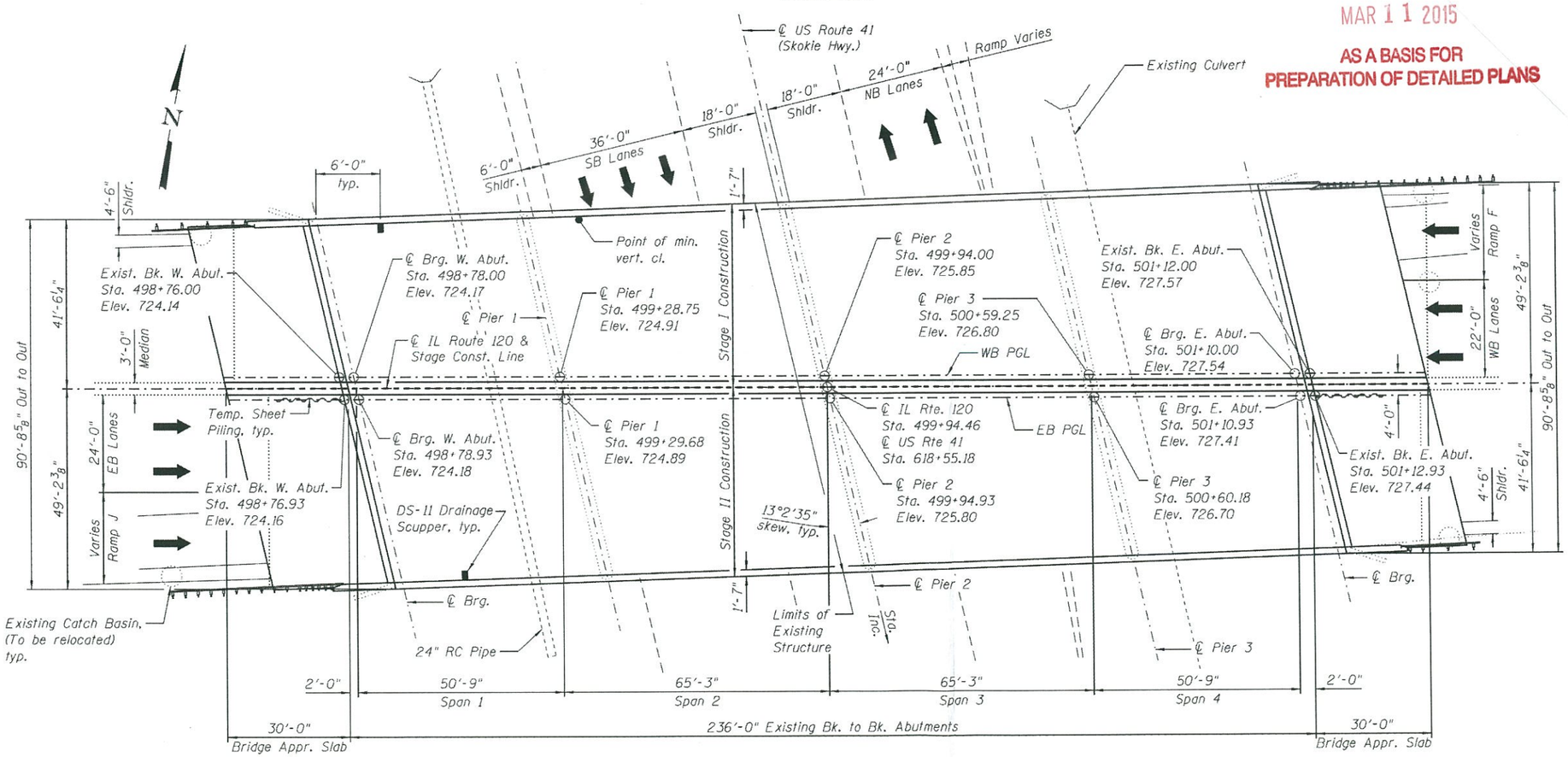

PLAN

Note:
All longitudinal dimensions are measured along ℄ Rte. IL 120.
All transverse dimensions are measured perpendicular to ℄ IL Rte. 120.

SCOPE OF WORK
1. Remove and replace existing concrete deck slab utilizing stage construction.
2. Provide new strip seal expansion joints at each abutment.
3. Remove and replace existing approach slabs.
4. Remove and reconstruct abutment back walls and wingwalls.
5. Make new deck composite by installing shear stud connectors along the positive moment regions.
6. Remove and replace existing roller bearings with elastomeric bearings at both abutments. Provide steel extensions as necessary.
7. Replace end diaphragms as necessary.
8. Provide drainage system behind both abutments.
9. Repair and modify substructure using Structural Repair of Concrete.
10. Remove existing lead paint and repaint all structural steel.
11. Slurry pump replacement fill under slopewalls.
12. Provide drainage scuppers.

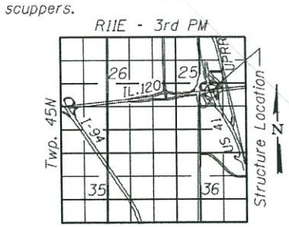

LOCATION SKETCH

GENERAL PLAN AND ELEVATION
IL RTE. 120 OVER US RTE. 41
FAP 342 - SECTION 12(HB&VB)BR
LAKE COUNTY
STA. 499+94.46
STRUCTURE NO. 049-0050

Primera	USER NAME = ___	DESIGNED - TBP	REVISED - ___
	FILE NAME = ___	CHECKED - MTH	REVISED - ___
	PLOT SCALE = ___	DRAWN - AJF	REVISED - ___
	PLOT DATE = ___	CHECKED - MTH	REVISED - ___

STATE OF ILLINOIS
DEPARTMENT OF TRANSPORTATION

SHEET NO. 1 OF 3 SHEETS

F.A.P. RTE.	SECTION	COUNTY	TOTAL SHEETS	SHEET NO.
342	12(HB&VB)BR	LAKE	3	1
		CONTRACT NO. 60X39		
		ILLINOIS FED. AID PROJECT		

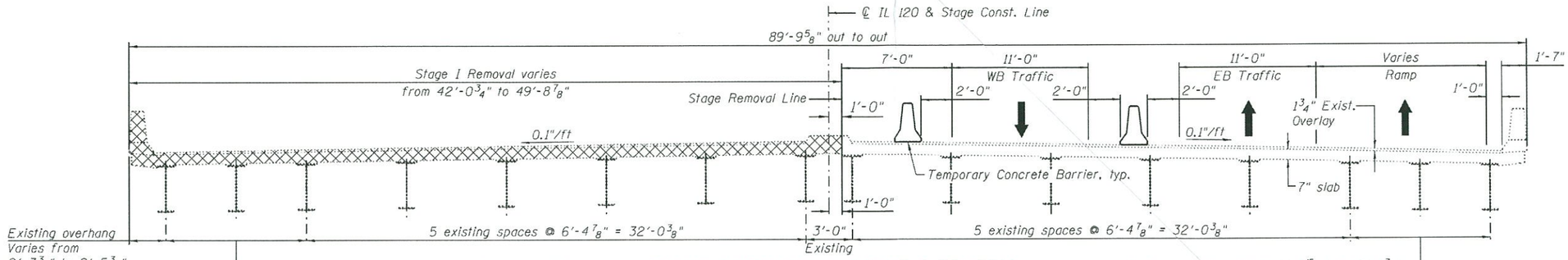

STAGE I REMOVAL & STAGE I TRAFFIC
(Looking East)

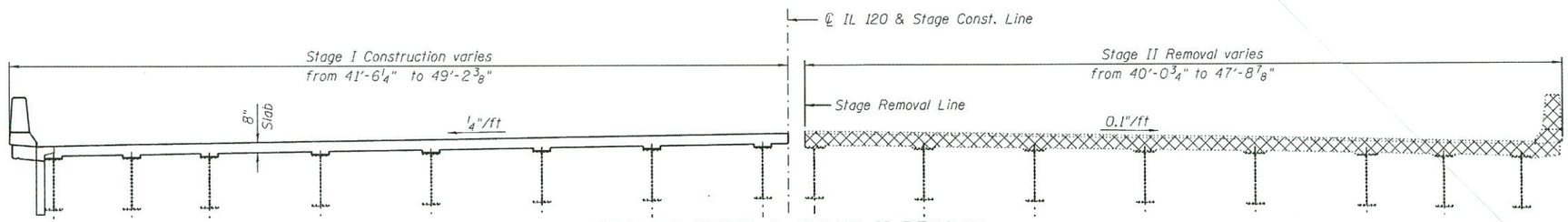

STAGE I CONST. & STAGE II REMOVAL
(Looking East)

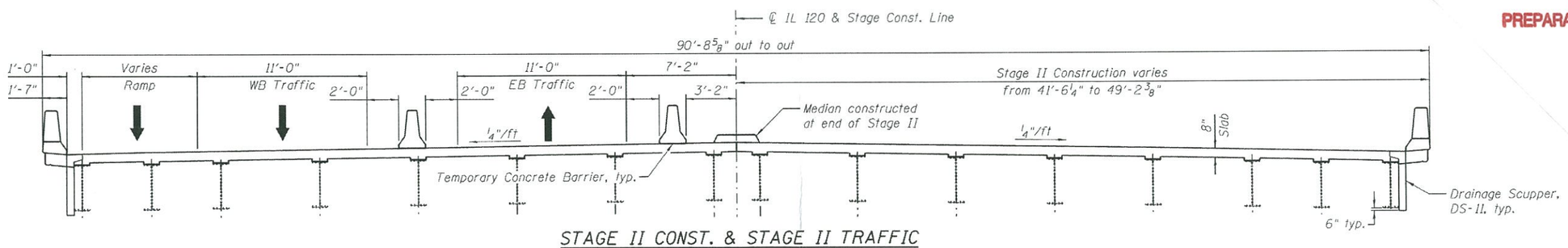

STAGE II CONST. & STAGE II TRAFFIC
(Looking East)

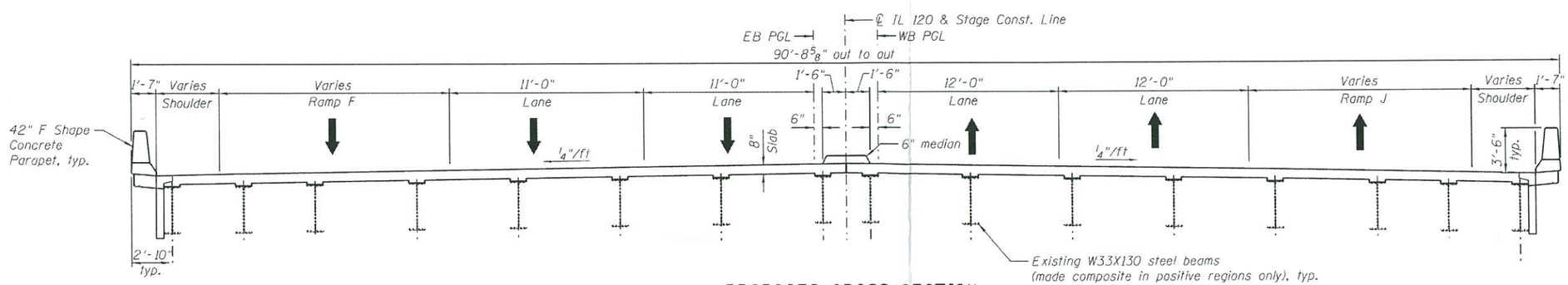

PROPOSED CROSS SECTION
(Looking East)

Note:
Dimensions at rt. L's to ℄ unless noted otherwise.

APPROVED
MAR 11 2015
AS A BASIS FOR
PREPARATION OF DETAILED PLANS

STAGE CONSTRUCTION DETAILS
IL RTE. 120 OVER US RTE. 41
FAP 342 - SECTION 12(HB&VB)BR
LAKE COUNTY
STA. 499+94.46
STRUCTURE NO. 049-0050

Primera	USER NAME =	DESIGNED - TBP	REVISED -
	FILE NAME =	CHECKED - MTH	REVISED -
	PLOT SCALE =	DRAWN - AJF	REVISED -
	PLOT DATE =	CHECKED - MTH	REVISED -

STATE OF ILLINOIS
DEPARTMENT OF TRANSPORTATION

SHEET NO. 2 OF 3 SHEETS

F.A.P. RTE.	SECTION	COUNTY	TOTAL SHEETS	SHEET NO.
342	12(HB&VB)BR	LAKE	3	2
		CONTRACT NO. 60X39		
		ILLINOIS FED. AID PROJECT		

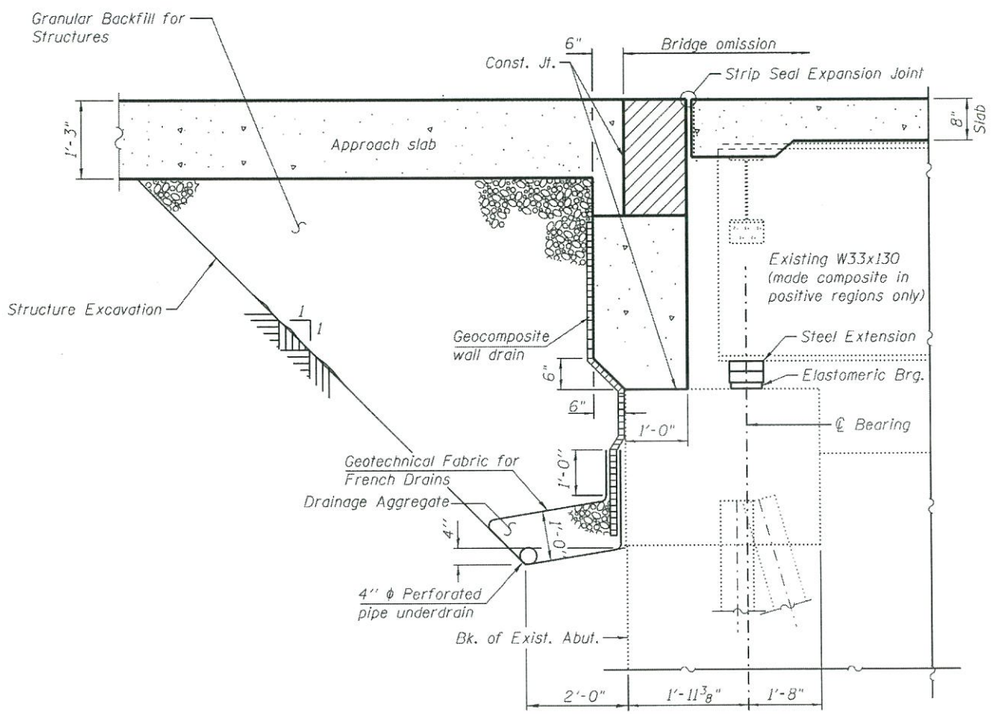

SECTION THRU ABUTMENTS
(Horiz. dim. @ Rt. L's)

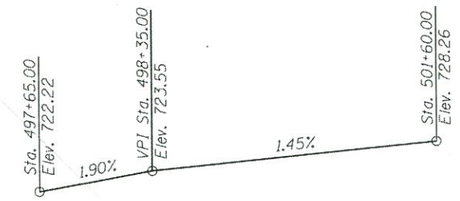

PROFILE GRADE
(Along EB & WB PGL IL 120)

*PROFILE GRADE
(Along ℄ US 41 NB Lanes)

*PROFILE GRADE
(Along ℄ US 41 SB Lanes)

* Derived from survey data.

APPROVED
MAR 11 2015
AS A BASIS FOR
PREPARATION OF DETAILED PLANS

MISCELLANEOUS DETAILS
IL RTE. 120 OVER US RTE. 41
FAP 342 - SECTION 12(HB&VB)BR
LAKE COUNTY
STA. 499+94.46
STRUCTURE NO. 049-0050

USER NAME =	DESIGNED - TBP	REVISED -	
FILE NAME =	CHECKED - MTH	REVISED -	
PLOT SCALE =	DRAWN - AJF	REVISED -	
PLOT DATE =	CHECKED - MTH	REVISED -	

STATE OF ILLINOIS
DEPARTMENT OF TRANSPORTATION

SHEET NO. 3 OF 3 SHEETS

F.A.P. RTE.	SECTION	COUNTY	TOTAL SHEETS	SHEET NO.
342	12(HB&VB)BR	LAKE	3	3
		CONTRACT NO. 60X39		
		ILLINOIS FED. AID PROJECT		