Benchmark: North Bolt of Fire Hydrant, between railroad and "Mobil" gas station, Elev 692.91, Sta 4138+51, 47' Lt

Existing Structure: S.N. 049-0095; Built in 1932 and reconstructed in 1970. The structure is a dual reinforced concrete box culvert that is 10' wide x 9' high. Length of 58' from back to back of wingwall end section. The existing structure is to be removed and replaced utilizing stage construction.

No Salvage.

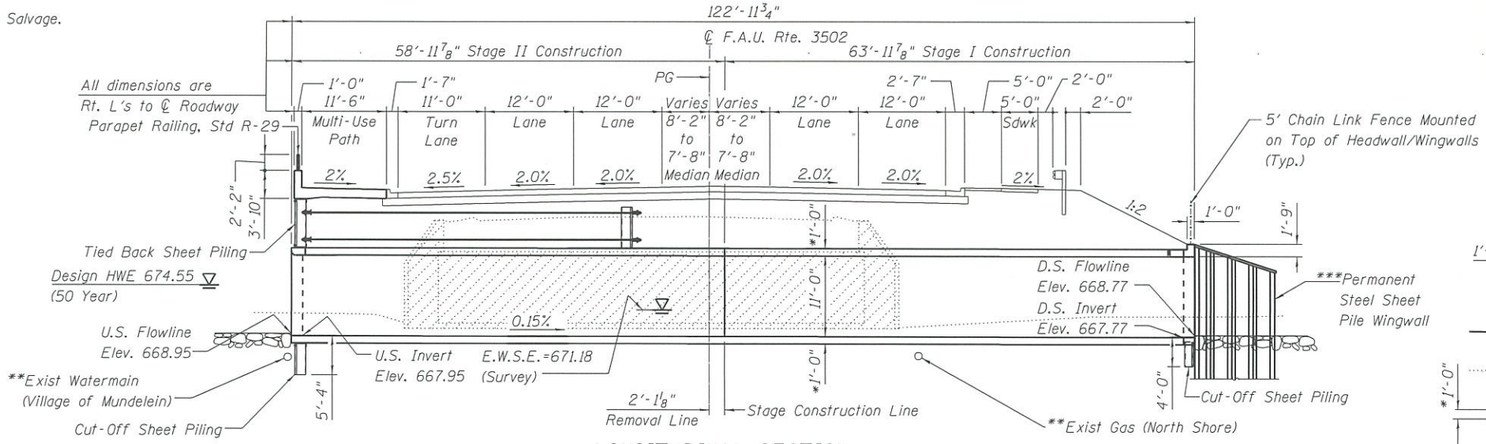

LONGITUDINAL SECTION

(Looking East at Centerline of Structure)

* Subject to Refinement during Final Design

** Utilities to be relocated.

*** Tip Elevation and Section Modulus to be determined in Final Design.

**** Maximum Fill Height = 8'-6"
Minimum Fill Height = 7'-6"

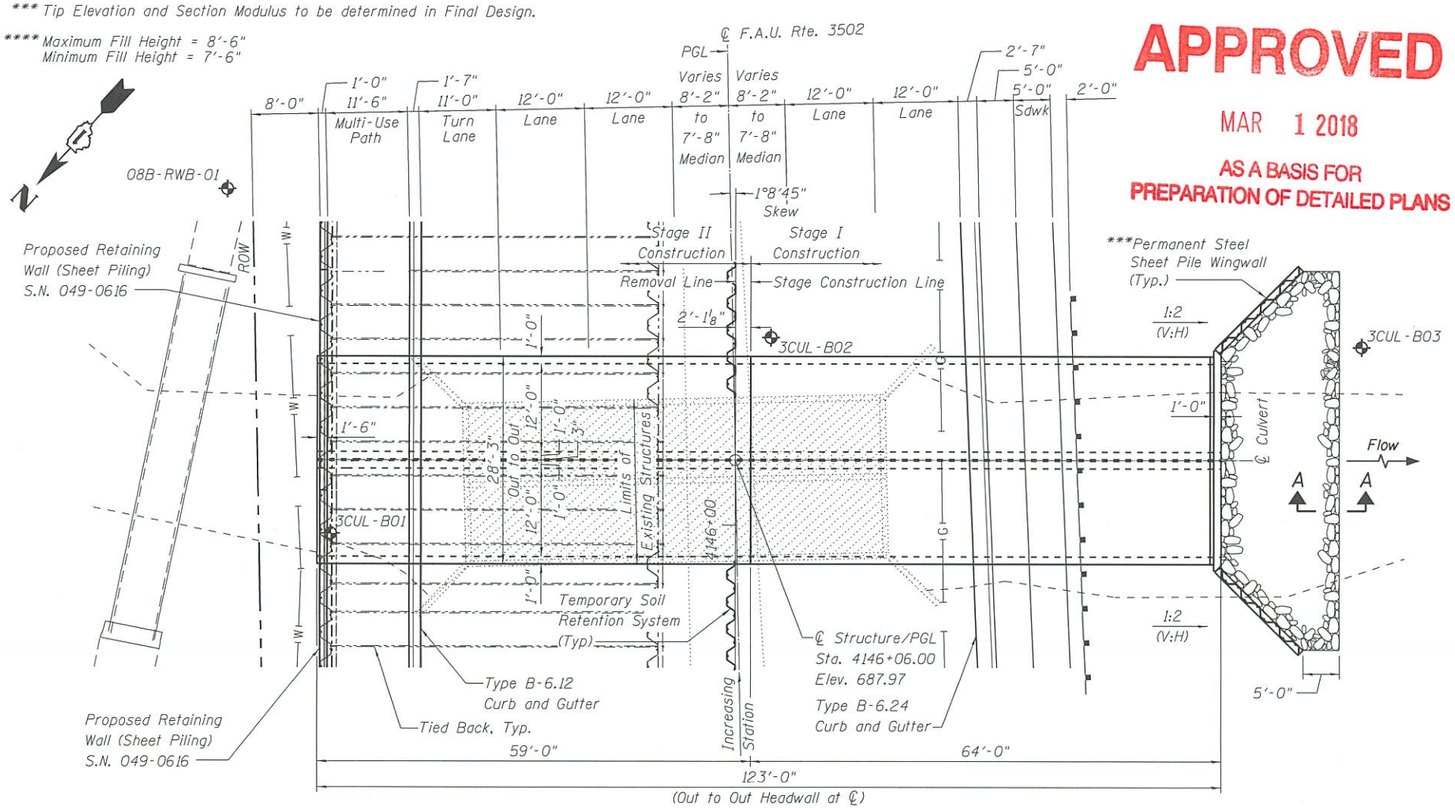

PLAN

APPROVED
MAR 1 2018
AS A BASIS FOR PREPARATION OF DETAILED PLANS

WATERWAY INFORMATION

Drainage Area = 8.75 Square Miles

Exist. Low Grade Elev. = 683.81 @ Sta. 4145+86
Prop. Low Grade Elev. = 686.12 @ Sta. 4147+00

Flood	Freq. Year.	Q (cfs)	Opening Sq. Ft. Exist.	Opening Sq. Ft. Prop.	Nat. H.W.E. Exist.	Nat. H.W.E. Prop.	Head - Ft. Exist.	Head - Ft. Prop.	Headwater Elev. Exist.	Headwater Elev. Prop.
	10	326	76.88	94.67	672.73	673.35	0.18	0.18	672.91	673.53
Design	50	583	99.15	120.47	673.85	674.55	0.45	0.35	674.30	674.90
Base	100	862	127.68	152.46	675.27	676.04	0.59	0.53	675.86	676.57
Max. Calc.	500	1149	149.95	177.05	676.39	677.18	0.98	0.75	677.37	677.93

10-Year Velocity through Existing Structure = 3.64 fps
10-Year Velocity through Proposed Structure = 2.38 fps

DESIGN SPECIFICATIONS

2017 AASHTO LRFD Bridge Design Specifications
8th Edition

DESIGN STRESSES

FIELD UNITS
f'c = 3,500 psi
fy = 60,000 psi (Reinforcement)

PRECAST UNITS
f'c = 5,000 psi
fy = 60,000 psi (Reinforcement)
fy = 65,000 psi (Welded Wire Fabric)

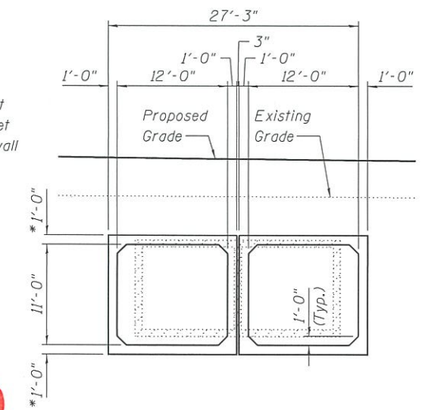

SECTION THRU STRUCTURE

HIGHWAY CLASSIFICATION

F.A.P. Rte. 3502 - U.S. Rte. 45
Functional Class: Minor Arterial (Urban)
ADT: 20,400 (2013), 24,900 (2013)
DHV Future: 2690 (2023)
ADTT: 3.8%
Design Speed: 45 m.p.h.
Posted Speed: 45 m.p.h.
Directional Distribution 50:50
Two-Way Traffic

LOADING HL-93

Allow 50#/sq. ft. for future wearing surface.

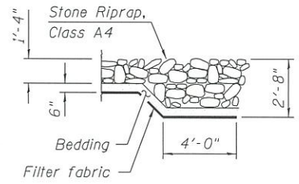

SECTION A-A

LEGEND:

- Soil Boring Location
- Gas
- Watermain
- Indicates Removal

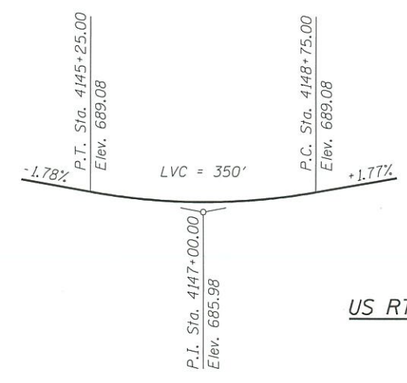

PROFILE GRADE

(Along N.B. & S.B. Lanes)

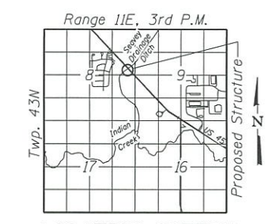

LOCATION SKETCH

GENERAL PLAN AND ELEVATION
US RTE 45 OVER SEAVEY DRAINAGE DITCH
F.A.U. RTE. 3502 - SEC. 49-Y
LAKE COUNTY
STATION 4146+06.00
STRUCTURE NO. 049-0234

2/28/2018 5:32:23 PM
0490234-D160N84-TSL-001.dgn

Stanley Consultants INC.

USER NAME =	DESIGNED - PS	REVISED -
	CHECKED - CSP	REVISED -
PLOT SCALE =	DRAWN - RTT	REVISED -
PLOT DATE =	CHECKED - CSP	REVISED -

STATE OF ILLINOIS
DEPARTMENT OF TRANSPORTATION

SHEET 1 OF 2 SHEETS

F.A.U. RTE.	SECTION	COUNTY	TOTAL SHEETS	SHEET NO.
3502	49-Y	LAKE		

CONTRACT NO. 60N84
ILLINOIS FED. AID PROJECT

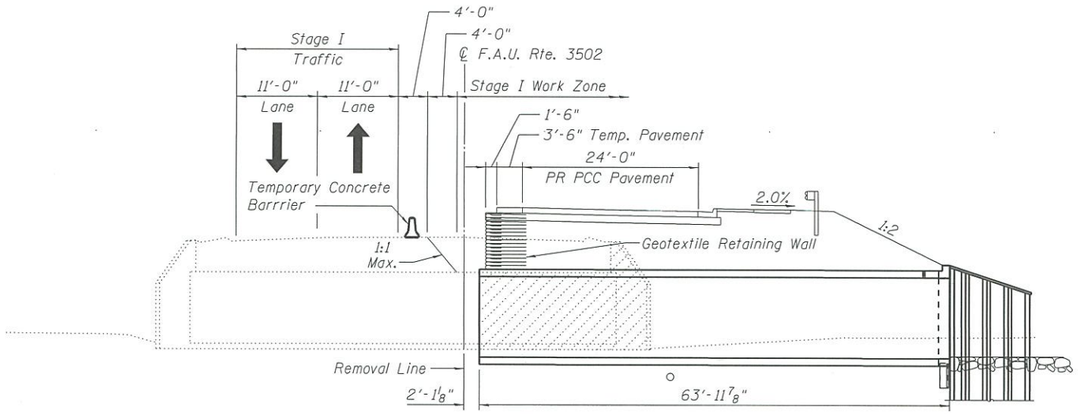

STAGE I CONSTRUCTION
(Dimensions are Rt. L's to ℄ Roadway)

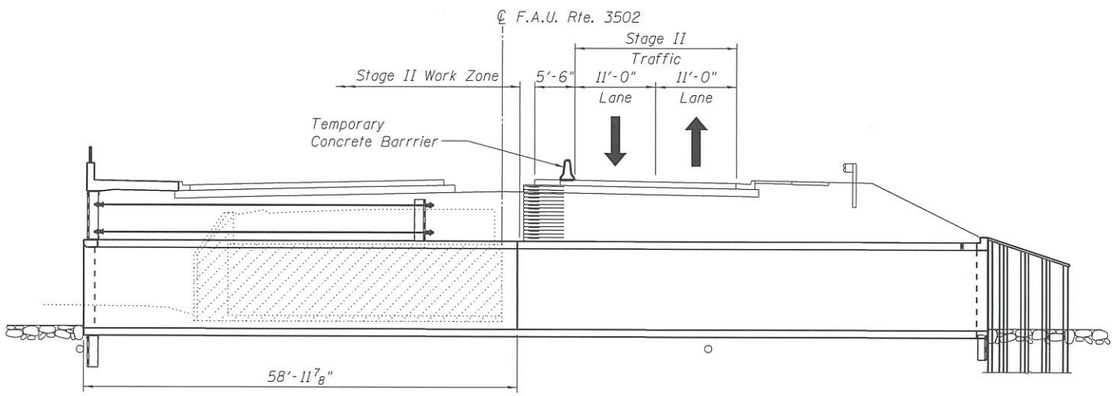

STAGE II CONSTRUCTION
(Dimensions are Rt. L's to ℄ Roadway)

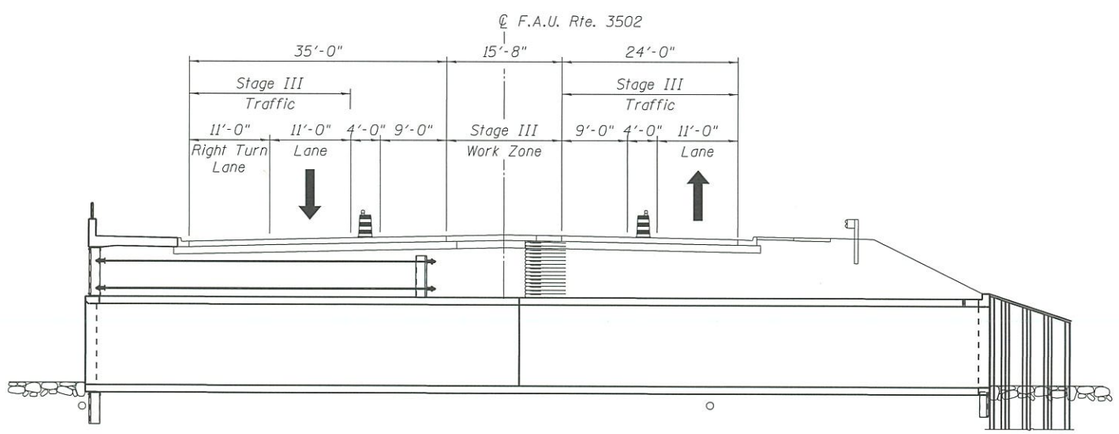

STAGE III CONSTRUCTION
(Dimensions are Rt. L's to ℄ Roadway)

APPROVED

MAR 1 2018

AS A BASIS FOR
PREPARATION OF DETAILED PLANS

STAGE CONSTRUCTION
US RTE 45 OVER SEAVEY DRAINAGE DITCH
F.A.U. RTE. 3502 - SEC. 49-Y
LAKE COUNTY
STATION 4146+06
STRUCTURE NO. 049-0234

2/28/2018 5:27:09 PM
0490234-D160N84-TSL-002.dgn

Stanley Consultants INC.

USER NAME =	DESIGNED - PS	REVISED -	
	CHECKED - CSP	REVISED -	
PLOT SCALE =	DRAWN - RTT	REVISED -	
PLOT DATE =	CHECKED - CSP	REVISED -	

STATE OF ILLINOIS
DEPARTMENT OF TRANSPORTATION

SHEET 2 OF 2 SHEETS

F.A.U. RTE.	SECTION	COUNTY	TOTAL SHEETS	SHEET NO.
3502	49-Y	LAKE		
		CONTRACT NO. 60N84		
		ILLINOIS FED. AID PROJECT		