BM 420: Chiseled "□" on Parapet Wall SW Corner of
SN 051-0063 over Embarras River, 60' Rt., Sta. 3551+06.7, 60' Rt.
Elev. 441.21

No Existing Structure

Dual Structure to SN 051-0063.

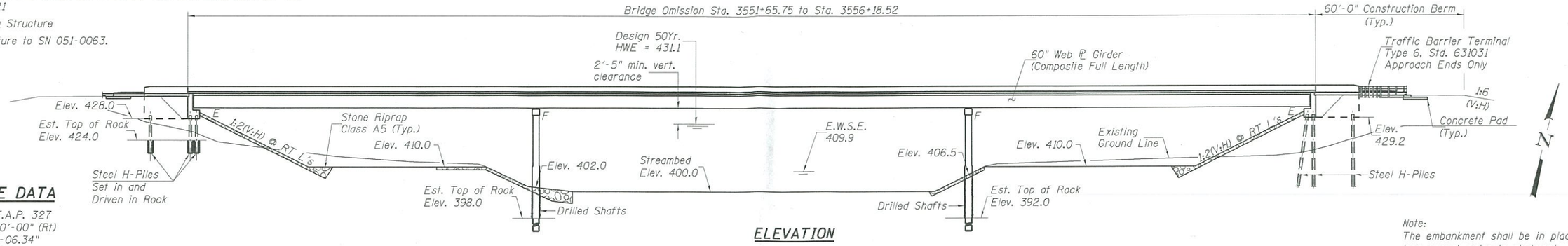

ELEVATION

CURVE DATA

℄ Survey F.A.P. 327
Δ = 66°-00'-00" (Rt)
D = 1°-12'-06.34"
R = 4,767.65'
T = 3,096.15'
L = 5,491.94'
E = 917.12'
S.E. = 4%
P.C. Sta. 3550+17.24
P.T. Sta. 3605+09.17
P.I. Sta. 3581+13.39

Note:
The embankment shall be in place long enough prior to abutment construction such that 0.4 inches or less settlement remains.

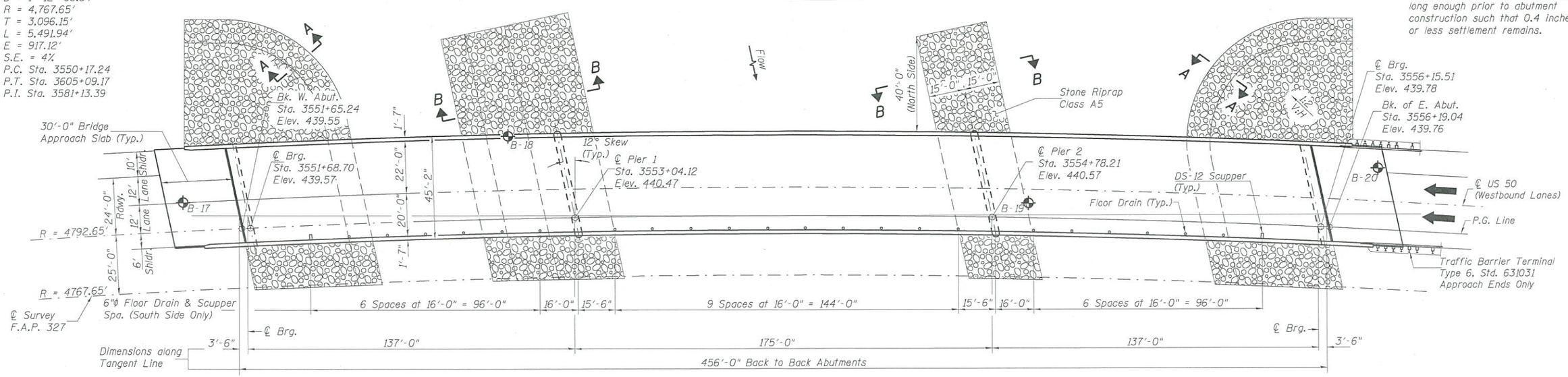

PLAN

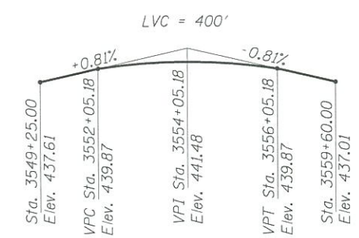

PROFILE GRADE

(Along Median Edge WB Lane)

WATERWAY INFORMATION

Drainage Area = 2,329.3 Sq. Mi.

Existing Low Grade Elev. = 435.45 @ Sta. 3560+34.68
Proposed Low Grade Elev. = 435.81 @ Sta. 3560+34.68

Flood	Freq. Yr.	Q C.F.S.	Q C.F.S.	Opening Sq. Ft. Exist.	Opening Sq. Ft. Prop.	Nat. H.W.E.	Head - Ft. Exist.	Head - Ft. Prop.	Headwater El. Exist.	Headwater El. Prop.
	10	SN 051-0067	20,466	7,972	7,972	429.1	0.2	0.0	429.3	429.1
		SN 051-0066	19,863							
		Total	40,329							
Design	50	SN 051-0067	31,775	8,824	8,824	431.1	0.0	0.0	431.1	431.1
		SN 051-0066	28,091							
		Total	59,866							
Base	100	SN 051-0067	39,647	9,299	9,299	432.2	0.0	0.0	432.2	432.2
		SN 051-0066	28,481							
		Total	68,128							
Max Calc	500	SN 051-0067	45,887	9,582	9,582	432.8	2.2	2.6	435.0	435.4
		SN 051-0066	42,047							
		Total	87,934							

DESIGN SCOUR ELEVATION TABLE

	W. Abut	Pier 1	Pier 2	E. Abut	Item 113
Q100	428.0	395.6	389.7	429.2	5
Q500	428.0	395.2	389.2	429.2	
Design	428.0	395.6	389.7	429.2	
Check	428.0	395.2	389.2	429.2	

HIGHWAY CLASSIFICATION

FAP 327 (US 50)
Functional Class: Principal Arterial
ADT: 3,800 (2017) 4,950 (2037)
DHV: 400 (2017) 520 (2037)
ADTT: 560 (2017) 730 (2037)
Design Speed: 70 m.p.h.
Posted Speed: 65 m.p.h.
Two-Way Traffic
Directional Distribution: 50:50

SEISMIC DATA

Seismic Performance Zone (SPZ) = 2
Design Spectral Acceleration at 1.0 sec. (S_{D1}) = 0.160g
Design Spectral Acceleration at 0.2 sec. (S_{DS}) = 0.406g
Soil Site Class = C

DESIGN STRESSES

(Field Units)
f'c = 3,500 p.s.i.
fy = 60,000 p.s.i. (Reinforcement)
fy = 50,000 p.s.i. (Structural Steel)
(AASHTO M270 Grade 50)

DESIGN SPECIFICATIONS

2014 AASHTO LRFD
Bridge Design Specifications, 7th Ed., with Interims

LOADING HL-93

Allow 50#/sq. ft. future wearing surface.

APPROVED
JUN 30 2015
AS A BASIS FOR PREPARATION OF DETAILED PLANS

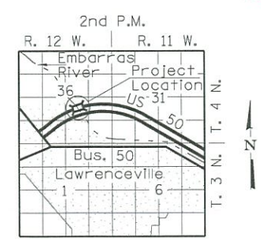

LOCATION SKETCH

GENERAL PLAN
US ROUTE 50 OVER EMBARRAS RIVER
F.A.P. ROUTE 327 SECTION (51-23)B-3
LAWRENCE COUNTY
STATION 3553+92.14
SN 051-0067

Hutchison Engineering, Inc.
Jacksonville, Peoria & Shorewood Illinois

USER NAME = bnebel	DESIGNED - JOH	REVISED -	
PLOT SCALE = NONE	CHECKED - BAN	REVISED -	
PLOT DATE = 6/25/2015	DRAWN - TAC	REVISED -	
	CHECKED - JOH	REVISED -	

STATE OF ILLINOIS
DEPARTMENT OF TRANSPORTATION

GENERAL PLAN
STRUCTURE NO. 051-0067 WBL
SHEET NO. 1 OF 2 SHEETS

F.A.P. RTE.	SECTION	COUNTY	TOTAL SHEETS	SHEET NO.
327	(51-23)B-3	RICHLAND/LAWRENCE		
		CONTRACT NO.		
		ILLINOIS FED. AID PROJECT		

V:\Bridge\2965-Richland&Lawrence\TSL\2965TSL-1(Embarras).dgn

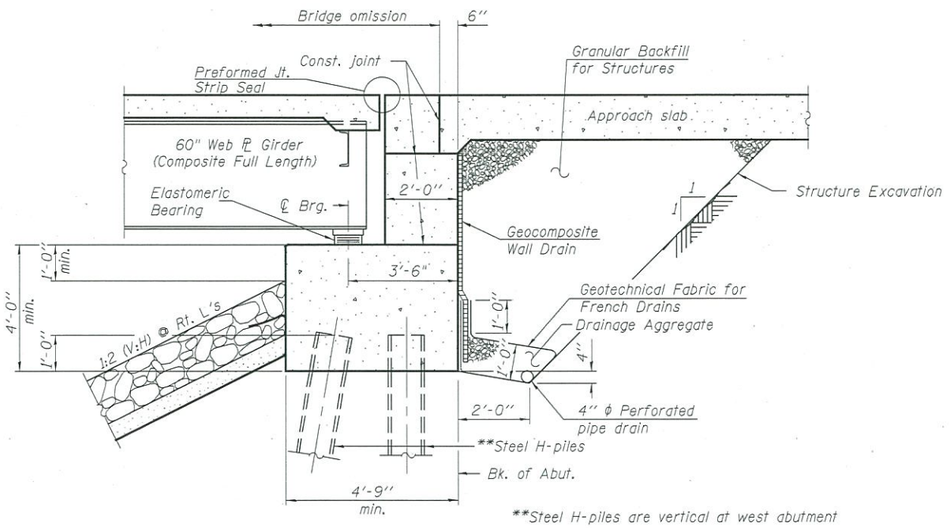

SECTION THRU PILE SUPPORTED STUB ABUTMENT

(Horiz. dim. @ Rt. L's)

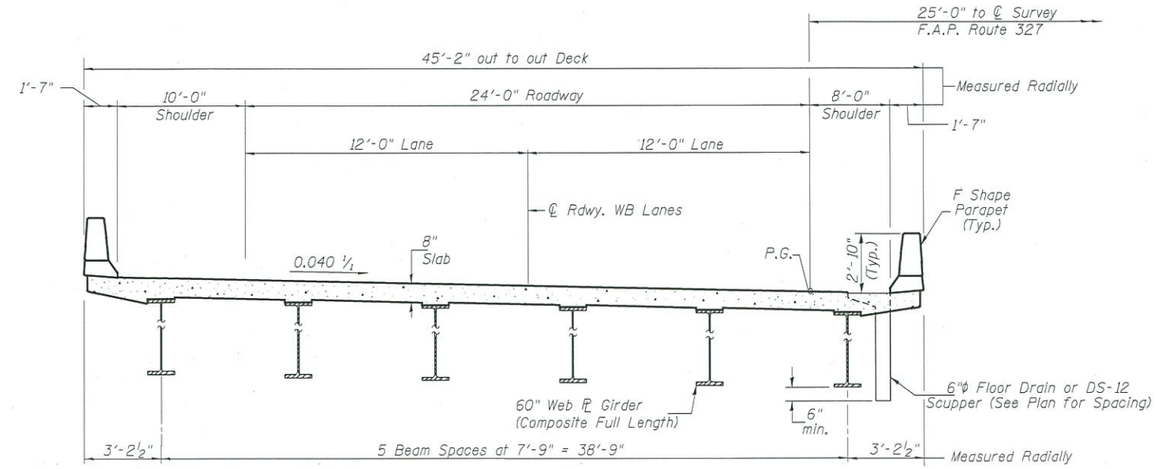

PROPOSED CROSS SECTION
WESTBOUND STRUCTURE

(Looking East)

APPROVED

JUN 30 2015

AS A BASIS FOR PREPARATION OF DETAILED PLANS

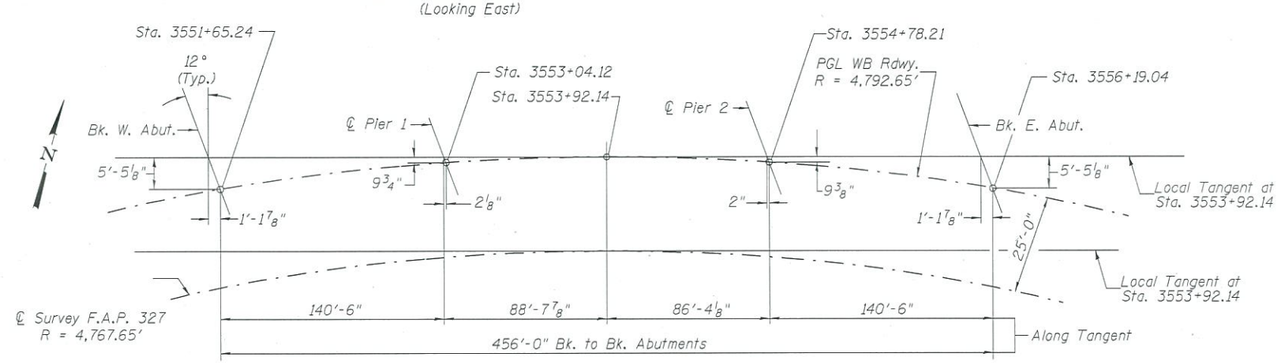

OFFSET SKETCH
WESTBOUND STRUCTURE

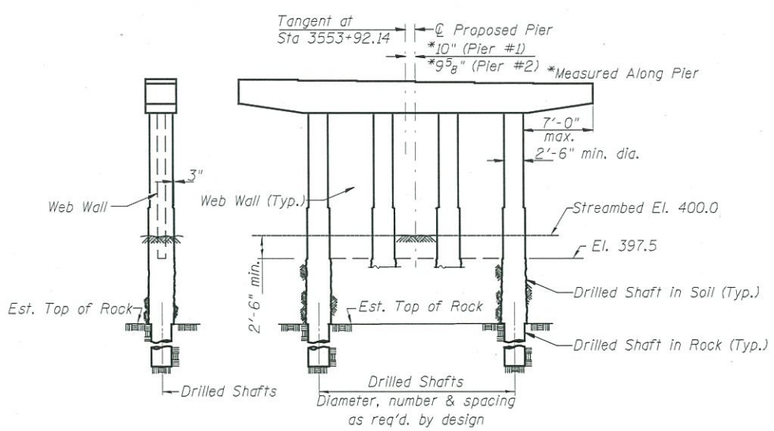

END VIEW

ELEVATION

PIER SKETCH

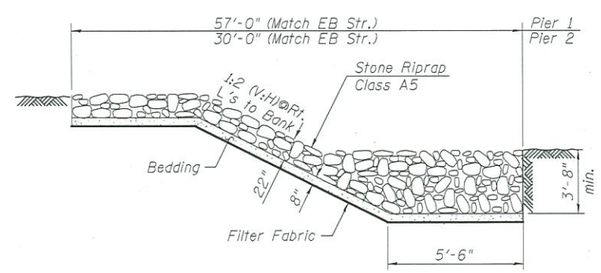

SECTION B-B

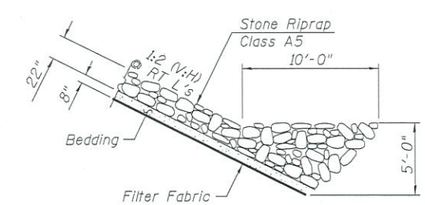

SECTION A-A

DETAILS
US ROUTE 50 OVER EMBARRAS RIVER
F.A.P. ROUTE 327 SECTION (51-23)B-3
LAWRENCE COUNTY
STATION 3553+92.14
SN 051-0067

Hutchison Engineering, Inc. Jacksonville, Peoria & Shorewood Illinois	USER NAME = bnebel	DESIGNED - JOH	REVISED -	STATE OF ILLINOIS DEPARTMENT OF TRANSPORTATION	DETAILS STRUCTURE NO. 051-0067 WBL	F.A.P. RTE.	SECTION	COUNTY	TOTAL SHEETS / SHEET NO.
	PLOT SCALE = NONE	CHECKED - BAN	REVISED -			327	(51-23)B-3	RICHLAND/LAWRENCE	
	PLOT DATE = 6/30/2015	DRAWN - TAC	REVISED -			CONTRACT NO.			
		CHECKED - JOH	REVISED -		SHEET NO. 2 OF 2 SHEETS	ILLINOIS FED. AID PROJECT			

V:\Bridge\2965-Richland&Lawrence\TSL\2965TSL-2(Embarras).dgn