Benchmark: B.M. 802, Chiseled square on S.W. Corner S.N. 051-0013, Elev. 454.13

Existing structure: SN 051-0013 built in 1959 as FAI 64, Section 51-23VB. The existing structure consists of a 3-span steel continuous multi-stringer superstructure with a CIP concrete deck supported by pile bent spill thru abutments and multi-column piers with crashwalls on timber pile supported footings. 151'-0" back-to-back of abutments and 36'-5" out to out of deck. Repairs were performed on the structure in 1987, including deck patching, rail retrofitting and replacement of expansion joints. The Proposed Structure is to be constructed under the existing structure. Traffic will be maintained during Structure removal and construction of the roadway using stage construction.

No salvage.

Precast alternate is not allowed.

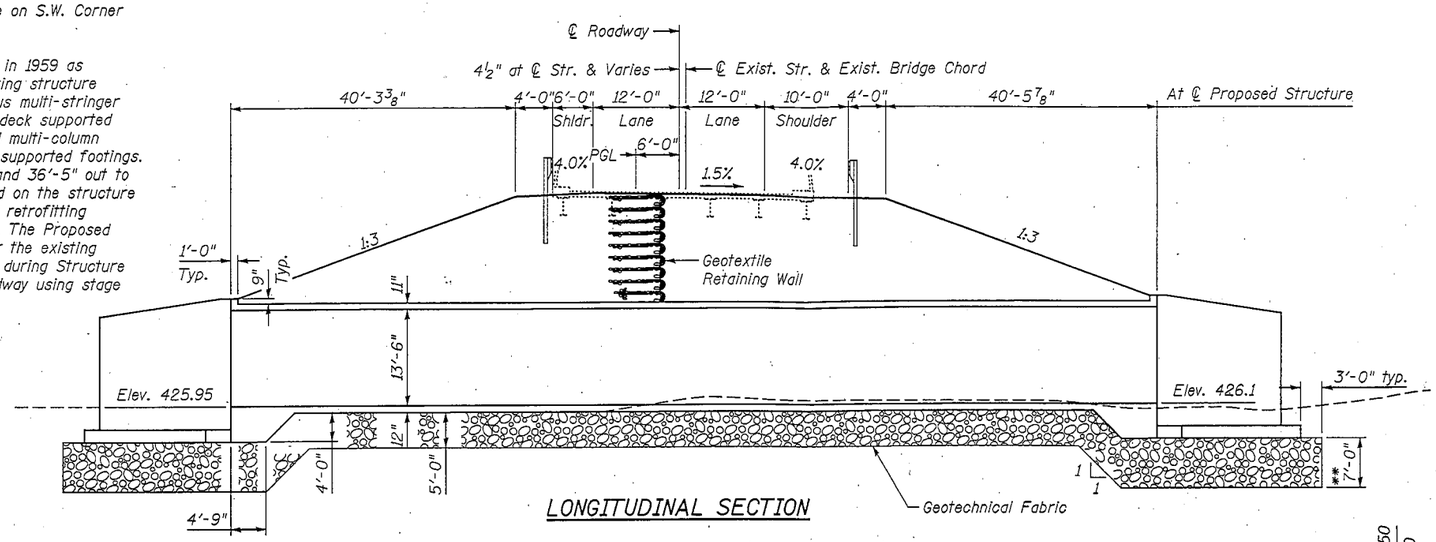

LONGITUDINAL SECTION

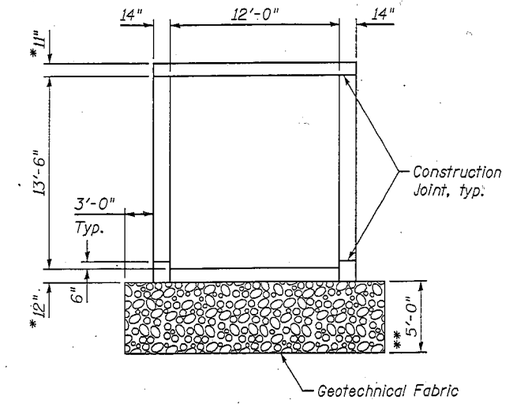

SECTION THRU BARREL

* Slab thickness subject to refinement during final design.

** Rockfill - Replacement, 5'-0" depth below barrel, 7'-0" depth below wingwalls

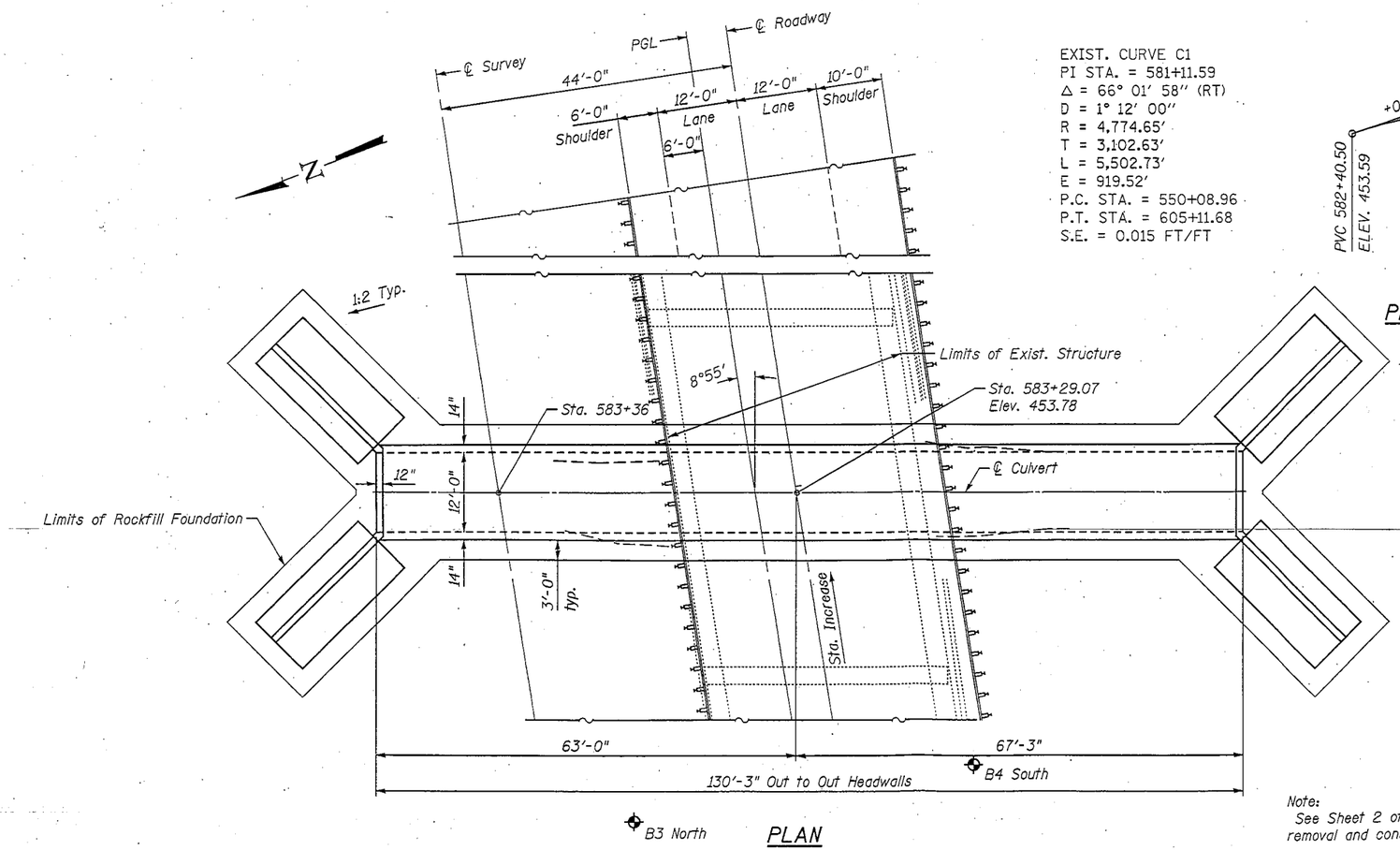

PLAN

EXIST. CURVE C1
PI STA. = 581+11.59
Δ = 66° 01' 58" (RT)
D = 1° 12' 00"
R = 4,774.65'
T = 3,102.63'
L = 5,502.73'
E = 919.52'
P.C. STA. = 550+08.96
P.T. STA. = 605+11.68
S.E. = 0.015 FT/FT

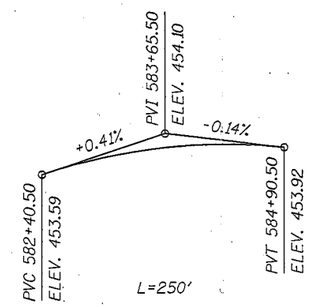

PROFILE GRADE
(Along P.G.L.)

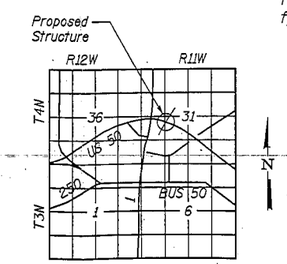

LOCATION SKETCH

HIGHWAY CLASSIFICATION
F.A.P. Rte. 327 (U.S. Rte. 50)
Functional Class: Other Principle Arterial
ADT: 5238 (2011); 6928 (2031)
ADTT: 21.4%
DHV: 762 (2031)
Design Speed: 55 m.p.h.
Posted Speed: 55 m.p.h.
Two Way Traffic
Directional Distribution: 51:49

LOADING HL-93
Allow 50#/sq. ft. for future wearing surface.

DESIGN SPECIFICATIONS
2010 AASHTO LRFD Bridge Design Specifications

DESIGN STRESSES
FIELD UNITS
f'c = 3,500 psi
fy = 60,000 psi (Reinforcement)

APPROVED
NOV 08 2012
AS A BASIS FOR PREPARATION OF DETAILED PLANS

Note:
See Sheet 2 of 2 for Stage removal and construction details.

GENERAL PLAN
U.S. ROUTE 50 OVER ABANDONED RAILROAD
F.A.P. ROUTE 327 SECTION (51-23VB)B-1
LAWRENCE COUNTY
STATION 583+36.00
STRUCTURE NO 051-8634

FILE NAME = ...\0518634-74113-001-tsl.dgn
CB PROJECT NO 08023-1

Coombe-Bloxdorf P.C. -CIVIL ENGINEERS- -STRUCTURAL ENGINEERS- -LAND SURVEYORS- Design Firm License No. 184-002703	USER NAME = _CFC_	DESIGNED -	REVISED -	STATE OF ILLINOIS DEPARTMENT OF TRANSPORTATION		F.A.P. RTE. 327	SECTION (51-23VB)B-1	COUNTY LAWRENCE	TOTAL SHEETS	SHEET NO.
		CHECKED -	REVISED -					CONTRACT NO. 74113	
	PLOT SCALE = 21:4.000000 '/' IN.	DRAWN - CFC	REVISED -						
	PLOT DATE = 10/24/2012	CHECKED - MCB	REVISED -		SHEET NO. 1 OF 2 SHEETS		ILLINOIS FED. AID PROJECT		

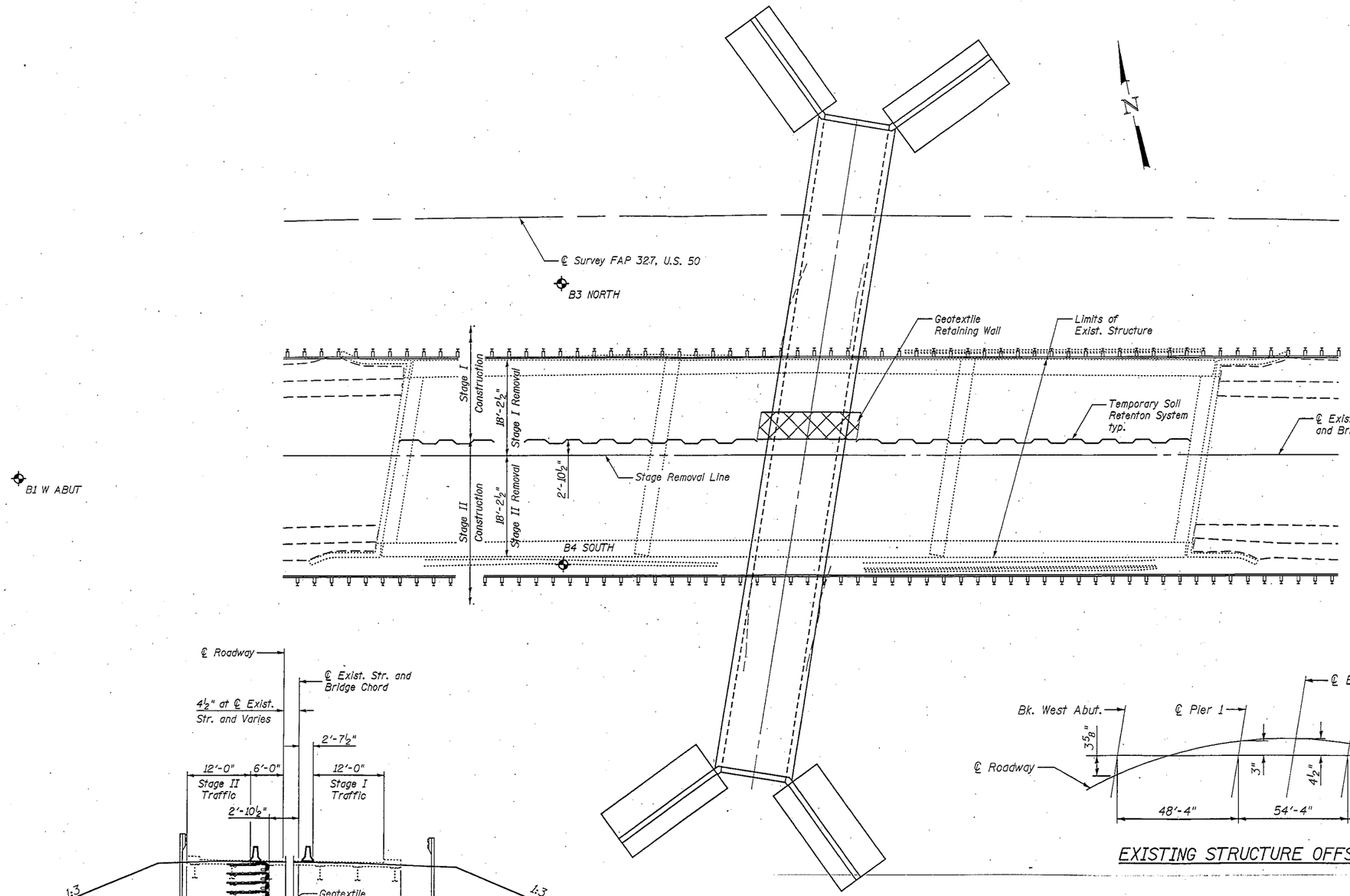

PLAN

Showing staged removal and construction

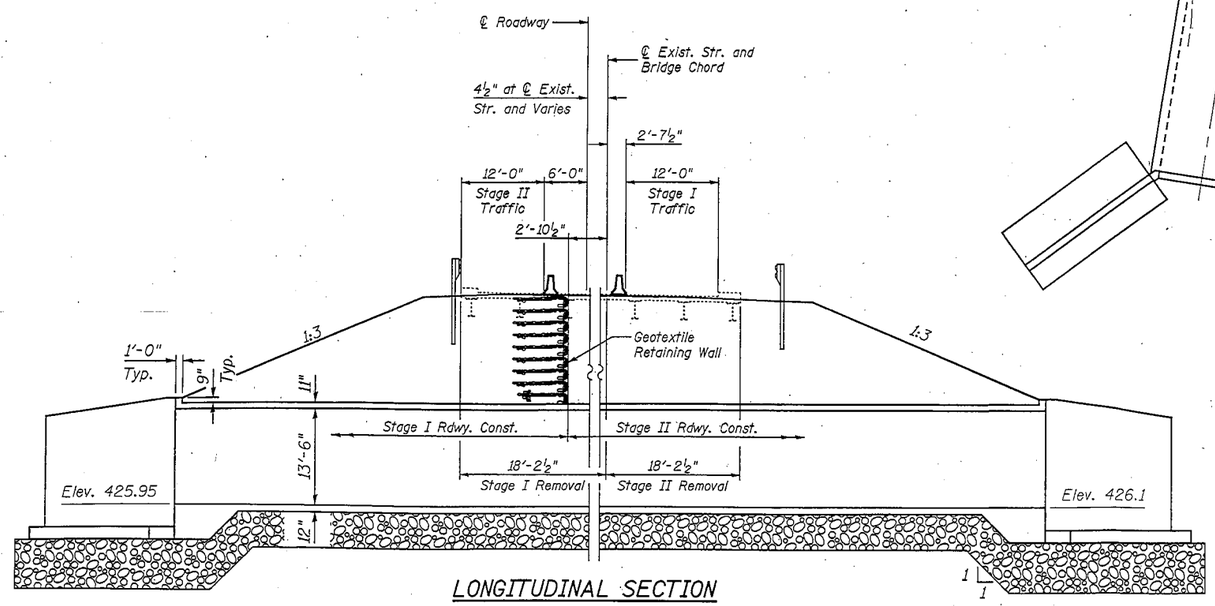

LONGITUDINAL SECTION

Showing staged removal and construction

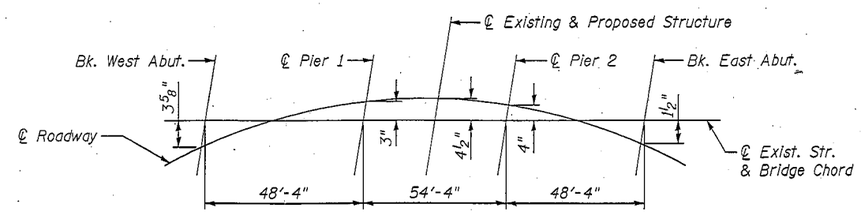

EXISTING STRUCTURE OFFSET SKETCH

GENERAL PLAN
U.S. ROUTE 50 OVER ABANDONED RAILROAD
F.A.P. ROUTE 327 SECTION (51-23VB)B-1
LAWRENCE COUNTY
STATION 583+36.00
STRUCTURE NO 051-8634

FILE NAME = 74113-002-ss1.dgn
CB PROJECT NO. 00823-1

Coombe-Bloxdorf P.C. -CIVIL ENGINEERS- -STRUCTURAL ENGINEERS- -LAND SURVEYORS- Design Firm License No. 184-002703	USER NAME = _CFC_	DESIGNED -	REVISED -	STATE OF ILLINOIS DEPARTMENT OF TRANSPORTATION		F.A.P. RTE.	SECTION	COUNTY	TOTAL SHEETS	SHEET NO.
		CHECKED -	REVISED -			327	(51-23VB)B-1	LAWRENCE		
	PLOT SCALE = 21:4.0000 ':' / IN.	DRAWN - CFC	REVISED -					CONTRACT NO. 74113		
	PLOT DATE = 10/24/2012	CHECKED - MCB	REVISED -		SHEET NO. 2 OF 2 SHEETS			ILLINOIS FED. AID PROJECT		