Bench Mark: BM #1. Chiseled "□" cut into top of S.E. wingwall of S.N 053-0065. Elev. 649.99.

Existing Structure: Structure Number 053-0065 built in 1970 as F.A. 395 (Illinois Route 116). Section 112-BR-2. Existing structure consists of three span, reinforced concrete deck supported on steel WF beams. The beams are supported on stub abutments supported on steel HP piles and modified hammerhead type piers supported by spread footings. The back to back abutments measure is 151'-8" and the out-to-out bridge deck dimension is 46'-0" in the existing conditions. Structure is to be removed and replaced. Traffic is to be maintained utilizing staged construction.

No salvage.

DESIGN SPECIFICATIONS

2017 AASHTO LRFD Bridge Design Specifications, Customary U.S. Units, 8th Edition

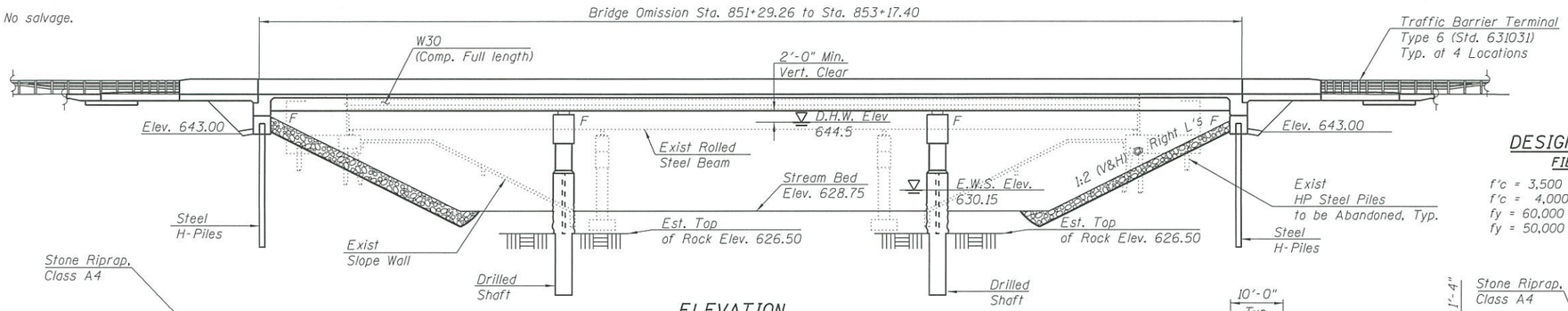

ELEVATION

HIGHWAY CLASSIFICATION

Rte: F.A.P. 673 (Illinois Rte. 116)
Functional Class: Minor Arterial
ADT: 3,360 (2020); 4,000 (2040)
ADTT: 390 (2020) ; 464 (2040)
DHV: 320
Design Speed: 55 m.p.h.
Posted Speed: 55 m.p.h.
Two-Way Traffic
Directional Distribution: 50:50

DESIGN STRESSES

FIELD UNITS

f'c = 3,500 psi
f'c = 4,000 psi (Superstructure)
fy = 60,000 psi (Reinforcement)
fy = 50,000 psi (M270 Grade 50W)

LOADING HL-93

Allow 50#/sq. ft. for future wearing surface.

SEISMIC DATA

Seismic Performance Zone (SPZ) = 1
Design Spectral Acceleration at 1.0 sec. (S_{D1}) = 0.078g
Design Spectral Acceleration at 0.2 sec. (S_{DS}) = 0.133g
Soil Site Class = C

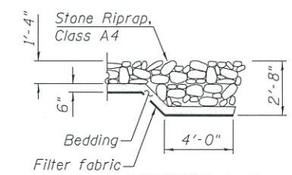

SECTION A-A

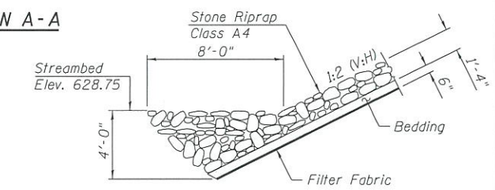

SECTION B-B

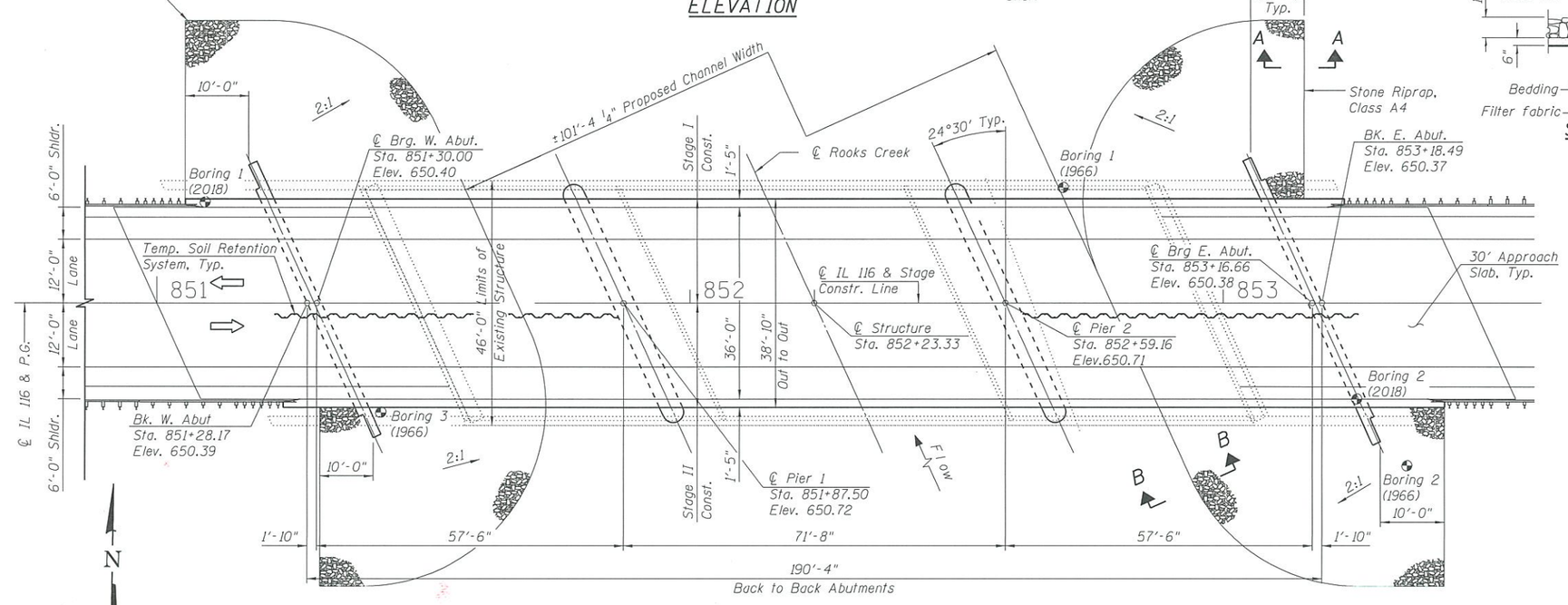

PLAN

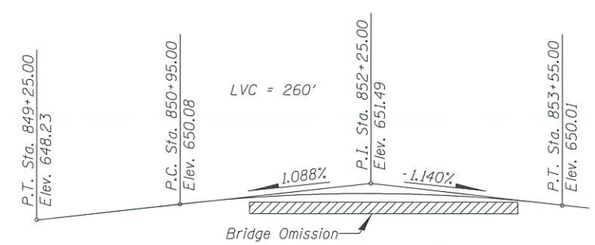

PROFILE GRADE (ALONG ℄ ROADWAY)

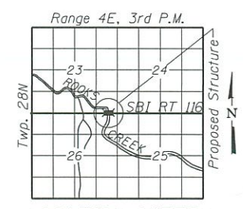

LOCATION SKETCH

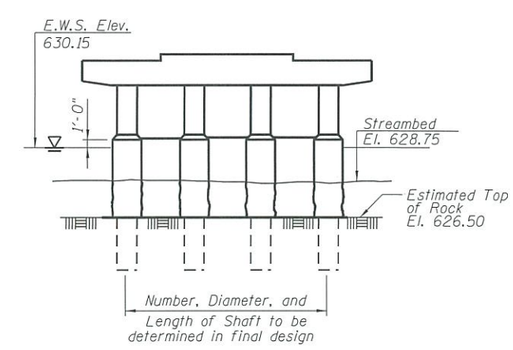

PIER SKETCH

APPROVED
AUG 17 2018
AS A BASIS FOR PREPARATION OF DETAILED PLANS

GENERAL PLAN
IL. RTE. 116 OVER ROOKS CREEK
F.A.P. RTE. 673 - SEC. (112-BR-2)ES
LIVINGSTON COUNTY
STATION 852+23.33
STRUCTURE NO. 053-0192

GRAEF 8501 W. Higgins Road, Suite 280 Chicago, Illinois 60631; (773) 399-0112	USER NAME =	DESIGNED - NDR	REVISED -	STATE OF ILLINOIS DEPARTMENT OF TRANSPORTATION	GENERAL PLAN S.N. 053-0192	F.A.P. RTE. 673	SECTION (112-BR-2)ES
		CHECKED -	REVISED -			COUNTY LIVINGSTON	TOTAL SHEETS 1 / SHEET NO. 2
	PLOT SCALE =	DRAWN - TCK	REVISED -			CONTRACT NO. 66E68	
	PLOT DATE = 8/17/2018	DATE - 05/10/2018	REVISED -			ILLINOIS FED. AID PROJECT	

X:\OH\2017\20173006-20\CAD\Transportation\dgn\CAD_Shts\0530065-0366E68-TSL-001.dgn
8/17/2018 12:22:30 PM

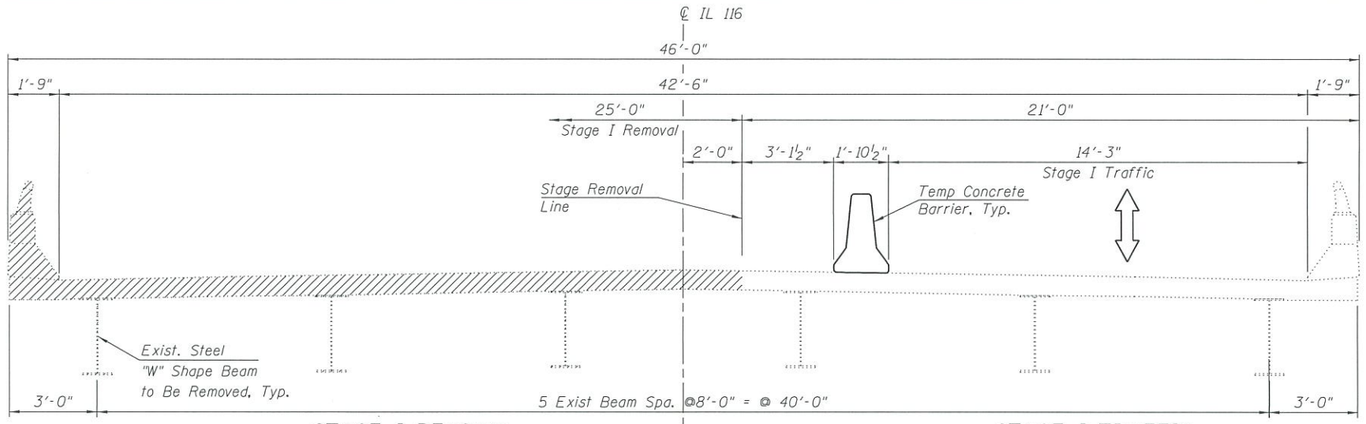

STAGE I REMOVAL
(LOOKING EAST)

STAGE I TRAFFIC
(LOOKING EAST)

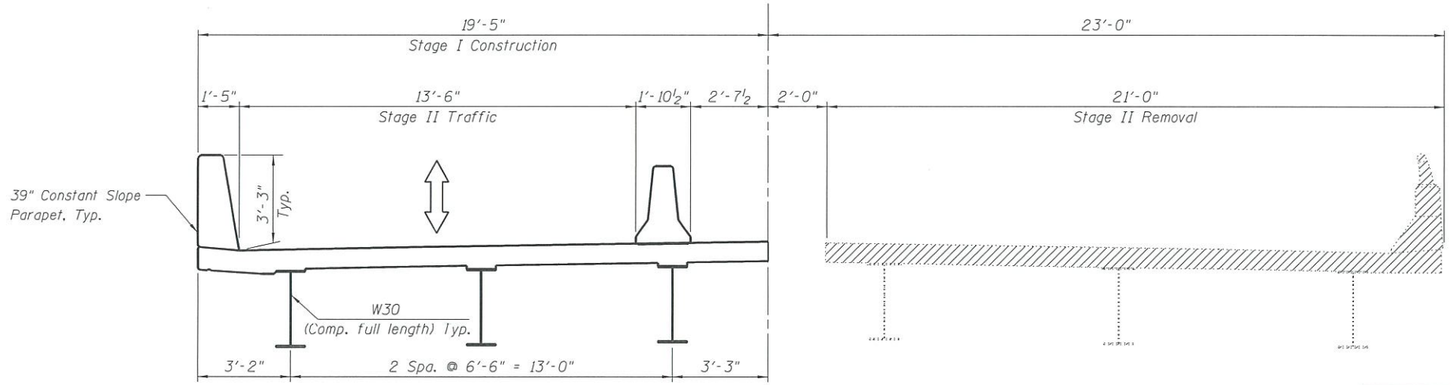

STAGE I CONSTRUCTION & STAGE II TRAFFIC

STAGE II REMOVAL

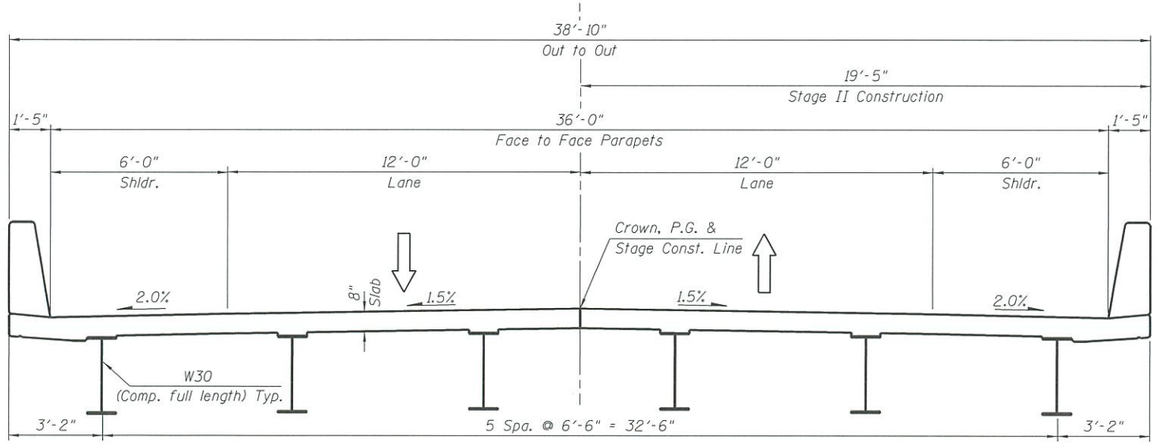

STAGE II CONSTRUCTION & FINAL CROSS SECTION
(LOOKING EAST)

SCOPE OF WORK

1. Remove and replace existing bridge structure.
2. Remove and replace existing approach slab.
3. Construct embankment cone and place stone riprap at the abutments.

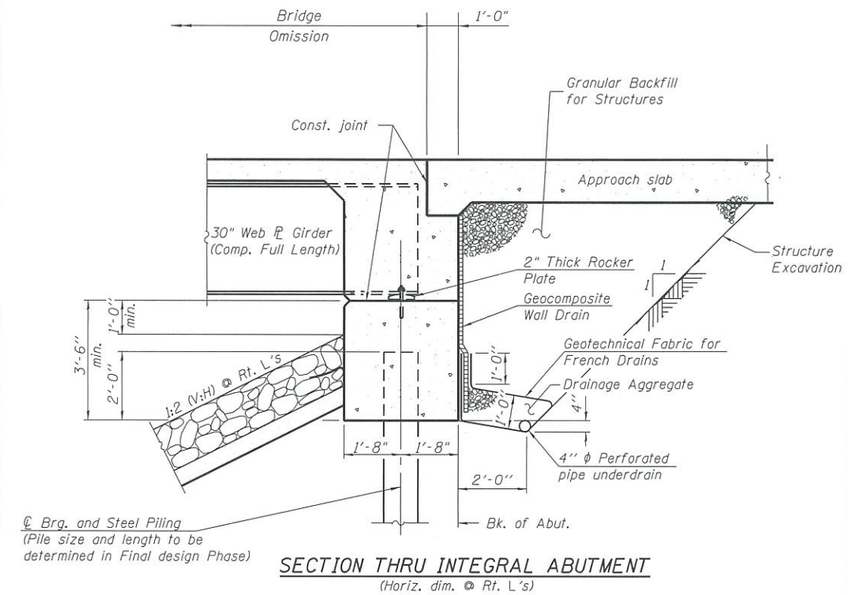

SECTION THRU INTEGRAL ABUTMENT
(Horiz. dim. @ Rt. L's)

WATERWAY INFORMATION TABLE

Drainage Area =	109 Sq. Mi.	Exist. Low Grade El. =646.20 @ Sta. 845+00.00 Prop. Low Grade El.=646.20@Sta.845+00							
Flood	FREQUENCY (Yr.)	Q (cfs)	Opening - Sq. Ft.		Nat. H.W.E.	Head - Ft.		Head Water El.	
			Exist.	Prop.		Exist.	Prop.	Exist.	Prop.
	10	5,520	1,047	1,431	641.6	0.5	0.5	642.1	642.1
Hydraulic Design	50	8,640	1,376	1,859	644.5	0.9	0.4	645.4	644.9
Base/Scour Des.	100	10,000	1,376	2,008	645.4	1.0	0.5	646.4	645.9
Scour Check	200	11,420	1,376	2,123	646.1	1.5	0.7	647.6	646.8
Ex. Overtopping	240	11,800	1,376	2,155	646.3	1.6	0.8	647.9	647.1
Max. Calc.	500	13,300	1,376	2,185	646.9	1.3	0.7	648.2	647.6

DESIGN SCOUR ELEVATION TABLE

Event/Limit State	Design Scour Elevations (ft.)				
	W. Abut	Pier 1	Pier 2	E. Abut	Item 113
0100	643.00	625.92	625.92	643.00	8
0200	643.00	625.28	625.28	643.00	
Design	643.00	625.92	625.92	643.00	
Check	643.00	625.28	625.28	643.00	

APPROVED
AUG 17 2018
AS A BASIS FOR PREPARATION OF DETAILED PLANS

GENERAL PLAN
IL. RTE. 116 OVER ROOKS CREEK
F.A.P. RTE. 673 - SEC. (112-BR-2)ES
LIVINGSTON COUNTY
STATION 852+23.33
STRUCTURE NO. 053-0192

X:\OH\2017\2073006-20\CAD\Transportation\dgn\CAD_Shts\0530065-0366E68-TSL-002.dgn
8/17/2018 12:23:14 PM

GRAEF
8501 W. Higgins Road; Suite 280
Chicago, Illinois 60631; (773) 399-0112

USER NAME =	DESIGNED - NDR	REVISED -	
	CHECKED -	REVISED -	
PLOT SCALE =	DRAWN - TCK	REVISED -	
PLOT DATE = 8/17/2018	DATE - 05/10/2018	REVISED -	

STATE OF ILLINOIS
DEPARTMENT OF TRANSPORTATION

DECK CROSS SECTION AND DETAILS
S.N. 053-0192

F.A.P. RTE.	SECTION	COUNTY	TOTAL SHEETS	SHEET NO.
673	(112-BR-2)ES	LIVINGSTON	2	2
		CONTRACT NO. 66E68		
	ILLINOIS FED. AID PROJECT			