Benchmark: Chisled square at the Northwest Corner of S.N. 058-0098, Station 349+90.93; Offset 85.89' left; Elevation 602.80

Existing Structures: S.N. 058-0098 (N.B.) and 058-0099 (S.B.) built in 1975 as F.A. Route 412, Section 58-20B-1, at Sta. 346+44.50. The existing dual structures are 10 span reinforced concrete decks on P.P.C. I-beams in Spans 1-7 and non-composite steel plate girders in Spans 8-10. The superstructure is supported by pile bent abutments and solid wall piers supported by concrete piles. The back to back abutment measures 755'-0" and the out to out of deck is 42'-0". Traffic to be maintained utilizing cross-over construction.

No Salvage

SCOPE OF WORK

1. In Spans 1-4, remove the PPC I-Beam superstructure and replace with a continuous steel beam superstructure.
2. In Spans 5-7, remove the PPC I-Beam superstructure and replace with a continuous steel beam superstructure.
3. In Spans 8-10, remove and replace the reinforced concrete deck and make beams composite.
4. Replace all rocker bearings with elastomeric expansion bearings at Pier 7 and the North Abutment.
5. Replace existing steel diaphragms at Pier 7 as needed.
6. Perform 5' zone painting on the existing steel superstructure below Pier 7 and the North Abutment. (Separate contract)
7. Perform substructure and slope wall repairs.
8. Remove and replace approach slabs and modify existing wingwalls to provide for road widening.

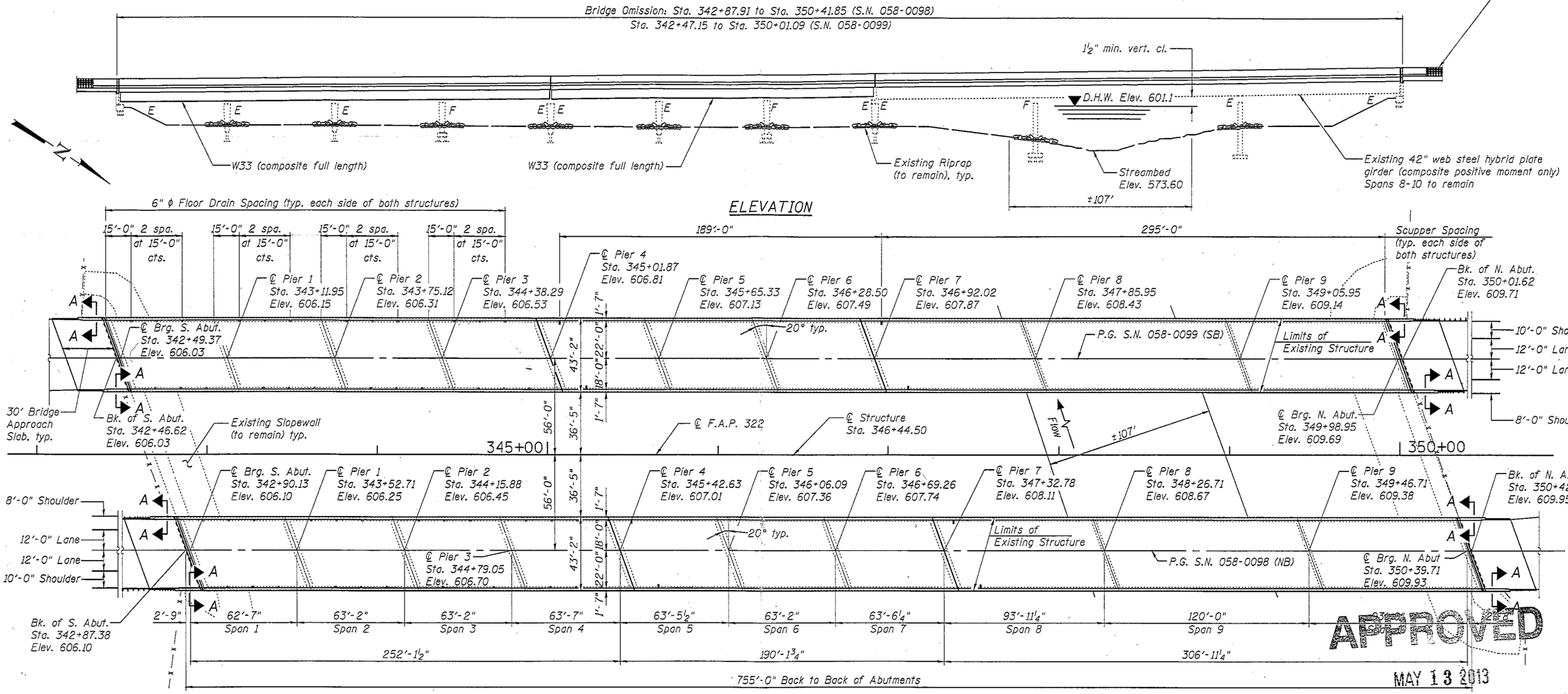

APPROVED
MAY 13 2013

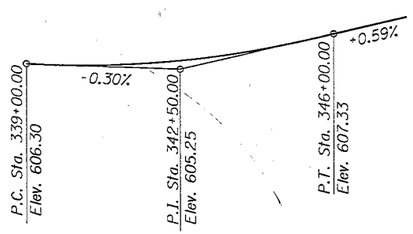

PROFILE GRADE F.A.P. 322 (S.B. & N.B.)
L.V.C. = 700'

SEISMIC DATA

Existing Substructure:
Seismic Performance Category (SPZ) = A
Horizontal Bedrock Acceleration Coefficient = 0.048g
Site Coefficient = 1.5

LOADING HL-93

Allow 50#/sq. ft. for future wearing surface.

DESIGN SPECIFICATIONS

AASHTO LRFD Bridge Design Specifications, 6th edition

HIGHWAY CLASSIFICATION

F.A.P. Rte. 322 - U.S. Route 51
Functional Class: Urban Freeway
ADT: 2,050 (2009); 2,267 (2015)
ADTT: 400 (2009); 442 (2015)
DHV: 215
Design Speed: 70 m.p.h.
Posted Speed: 65 m.p.h.
One-Way Traffic

DESIGN STRESSES

FIELD UNITS (New Construction)
f'c = 3,500 psi
fy = 60,000 psi (Reinforcement)
fy = 50,000 psi (M270 Grade 50)

FIELD UNITS (Existing Construction)
f'c = 3,500 psi
fy = 40,000 psi (Reinforcement)
fy = 50,000 psi (M223 Grade 50)
fy = 36,000 psi (M183 Grade 36)

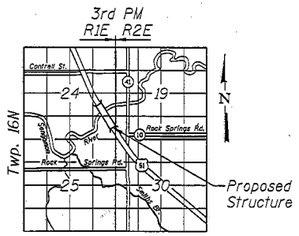

LOCATION SKETCH

AS A BASIS FOR PREPARATION OF DETAILED PLANS

GENERAL PLAN
U.S. ROUTE 51 OVER SANGAMON RIVER
F.A.P. 322 SEC. (58-20B-1)BR
MACON COUNTY
STATION 346+44.50
STRUCTURE NO. 058-0098 (N.B.)
STRUCTURE NO. 058-0099 (S.B.)

FILE NAME = D:\PROJECT\2082773.012\CADD\Structure\B5B8898_74351_001.TSL General Plan.dgn

Stantec

USER NAME = bsayers	DESIGNED - BPS	REVISED -	
	CHECKED - BHS	REVISED -	
PLOT SCALE = N/A	DRAWN - MJB	REVISED -	
PLOT DATE = 3/29/2013	CHECKED - GSP	REVISED -	

STATE OF ILLINOIS
DEPARTMENT OF TRANSPORTATION

GENERAL PLAN
S.N. 058-0098 & 058-0099

SHEET NO. 1 OF 2 SHEETS

F.A.P. RTE.	SECTION	COUNTY	TOTAL SHEETS	SHEET NO.
322	(58-20B-1)BR	MACON		
		CONTRACT NO. 78351		
FED. ROAD DIST. NO. 1	ILLINOIS	FED. AID PROJECT		

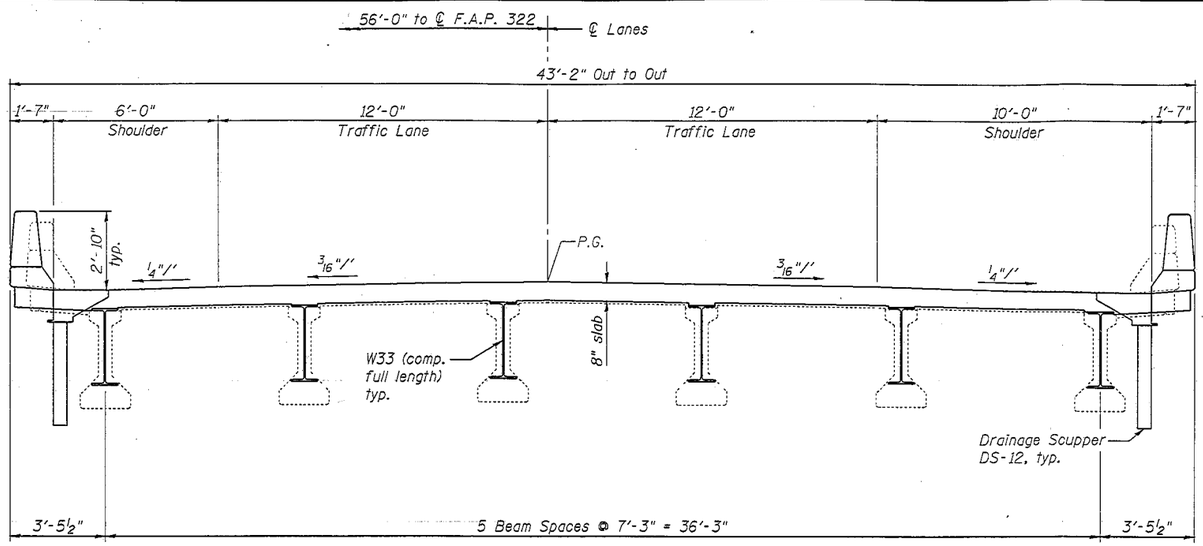

CROSS SECTION - SPANS 1 THRU 7

(S.N. 058-0098 NB - looking North)
(S.N. 058-0099 SB - looking South)

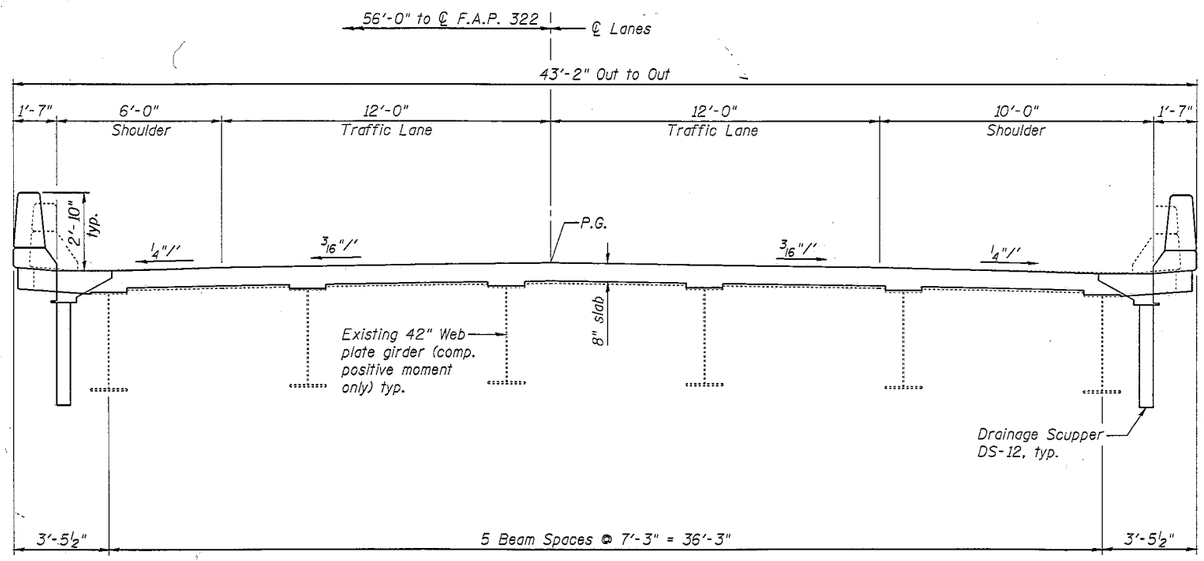

CROSS SECTION - SPANS 8 THRU 10

(S.N. 058-0098 NB - looking North)
(S.N. 058-0099 SB - looking South)

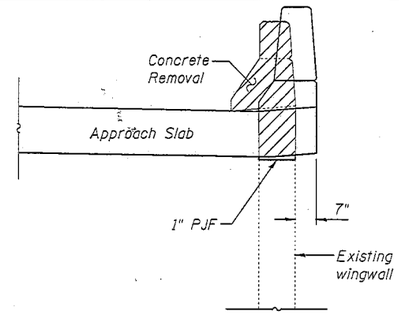

SECTION A-A

See Sheet 1 for location

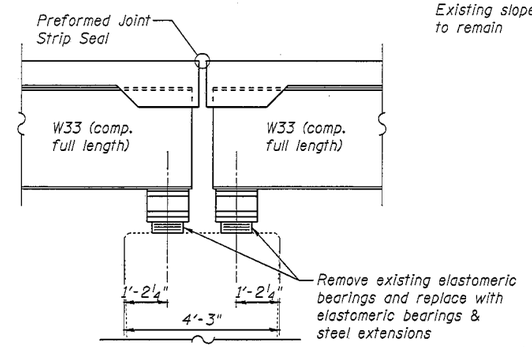

SECTION THRU PIER 4

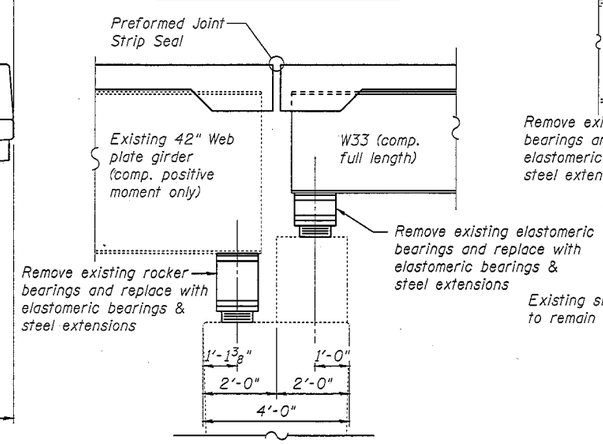

SECTION THRU PIER 7

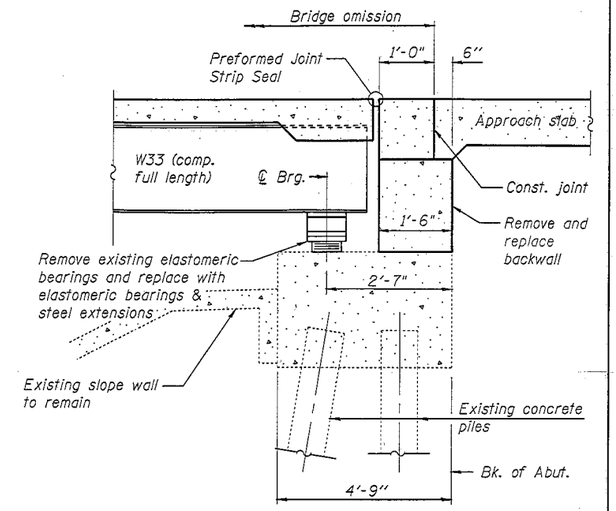

SECTION THRU SOUTH ABUTMENT

(Horiz. dim. @ Rt. L's)

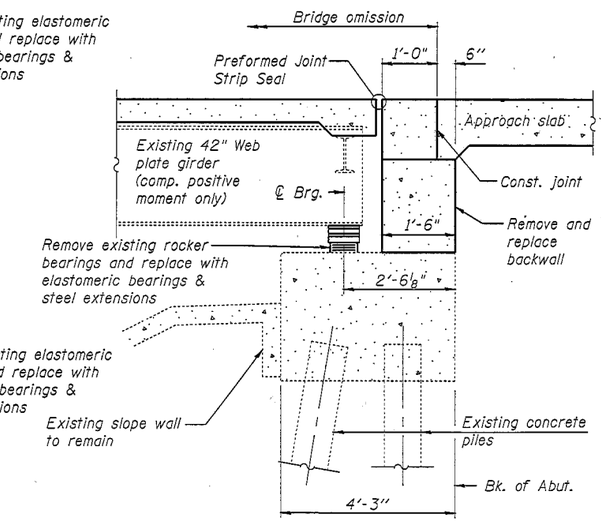

SECTION THRU NORTH ABUTMENT

(Horiz. dim. @ Rt. L's)

WATERWAY INFORMATION

Drainage Area = 1040 mi²		Low Grade Elev. 605.81 ft. @ Sta. 342+00								
Flood	Freq. Yr.	Q C.F.S.	Opening Sq. Ft. Exist.	Opening Sq. Ft. Prop.	Nat. H.W.E.	Head - Ft. Exist.	Head - Ft. Prop.	Headwater El. Exist.	Headwater El. Prop.
	10	17200	6572	6572	598.1	1.2	1.2	599.3	599.3
Design	50	25800	8551	8551	601.1	1.4	1.4	602.5	602.5
Base	100	29400	9320	9320	602.5	1.7	1.7	604.2	604.2
Overtopping									
Max. Calc.	500	38100	9859	9859	604.6	0.4	0.4	605.0	605.0

DESIGN SCOUR ELEVATION TABLE

Design Scour Elevation (ft.)	Structure	S. Abut.	Pier 1	Pier 2	Pier 3	Pier 4	Pier 5	Pier 6	Pier 7	Pier 8	Pier 9	N. Abut.
	058-0098 NB	597.7	585.3	585.4	584.8	584.5	584.3	584.4	585.1	573.5	572.7	600.5
	058-0099 SB	597.6	585.2	585.3	584.6	584.2	584.0	584.0	584.7	573.2	572.4	600.2

DETAILS
U.S. ROUTE 51 OVER SANGAMON RIVER
F.A.P. 322 SEC. (58-20B-1)BR
MACON COUNTY
STATION 346+44.50
STRUCTURE NO. 058-0098 (N.B.)
STRUCTURE NO. 058-0099 (S.B.)

FILE NAME = G:\PROJECT\2082773.012\CADD\Structure\0508098.74351.002_TSL Sections.dgn

Stantec

USER NAME = bsayers	DESIGNED - BPS	REVISED -	
	CHECKED - BHS	REVISED -	
PLOT SCALE = N/A	DRAWN - MJB	REVISED -	
PLOT DATE = 3/29/2013	CHECKED - GSP	REVISED -	

STATE OF ILLINOIS
DEPARTMENT OF TRANSPORTATION

DETAILS
S.N. 058-0098 & 058-0099

SHEET NO. 2 OF 2 SHEETS

F.A.P. RTE.	SECTION	COUNTY	TOTAL SHEETS	SHEET NO.
322	(58-20B-1)BR	MACON		
		CONTRACT NO. 78351		
FED. ROAD DIST. NO. 1	ILLINOIS	FED. AID PROJECT		