Benchmark: Chiseled '□' on Northwest wingwall SN 068-0017, Elev. 679.01 at Sta. 43+38.9, 16.39' Rt.

Existing Structure: SN 068-0017 at Sta. 43+23 was built in 1923 as SBI 16, Section 18. The structure is a single span concrete slab on closed abutments and has a length of 32'-0" back to back abutments and a width of 32'-2" out to out, no skew. Stage construction will be utilized to maintain one lane of traffic at all times.

No Salvage.

APPROVED

APR 04 2012

AS A BASIS FOR PREPARATION OF DETAILED PLANS

Notes:
Excavation behind the existing abutments shall be completed to balance front and back soil pressure before removing the existing superstructure.
Existing abutments shall be removed to 2 ft below the proposed culvert barrel and backfilled with Rockfill (Special). Backfill for the culvert excavation shall consist of granular culvert backfill.

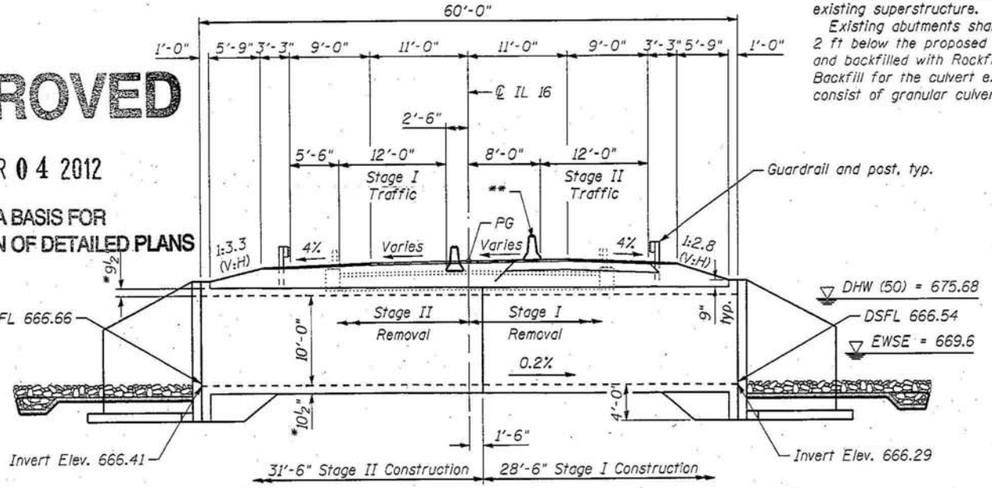

LONGITUDINAL SECTION

* Slab thickness may be refined in final design.

** Temporary Concrete Barrier, typ.

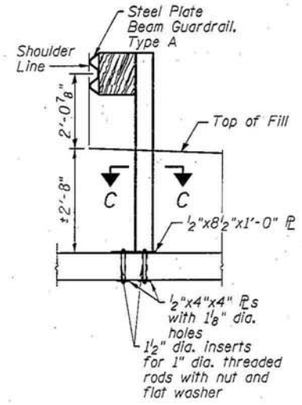

GUARDRAIL CONNECTION DETAIL

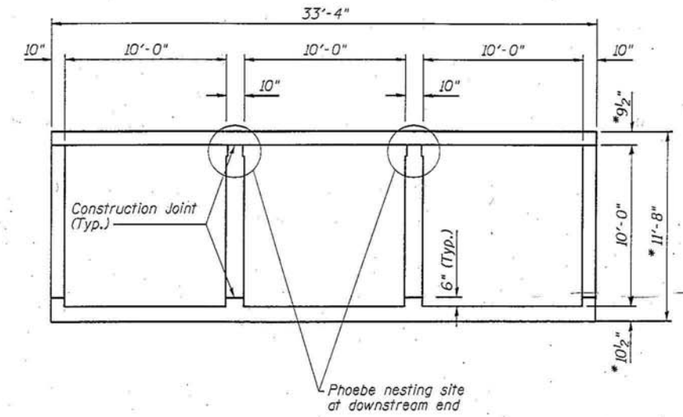

SECTION THRU BARREL

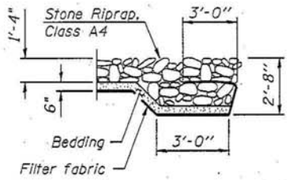

SECTION A-A

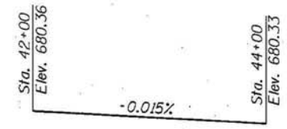

PROFILE GRADE
(along ℄ IL Rte. 16)

HIGHWAY CLASSIFICATION

F.A.P. Rte. 325 IL Rte. 16
Functional Class: Other Principal Arterial
ADT: 2550 (2009); 2430 (2021)
ADTT: 22%
DHV: 250
Design Speed: 55 m.p.h.
Posted Speed: 55 m.p.h.
2 -Way Traffic
Directional Distribution: 50:50

DESIGN SPECIFICATIONS

2010 AASHTO LRFD Bridge Design Specifications, 5th Edition, with 2010 Interims

LOADING HL-93

Allow 50#/sq. ft. for future wearing surface.

DESIGN STRESSES

FIELD UNITS

f'c = 3,500 psi
fy = 60,000 psi (Reinforcement)

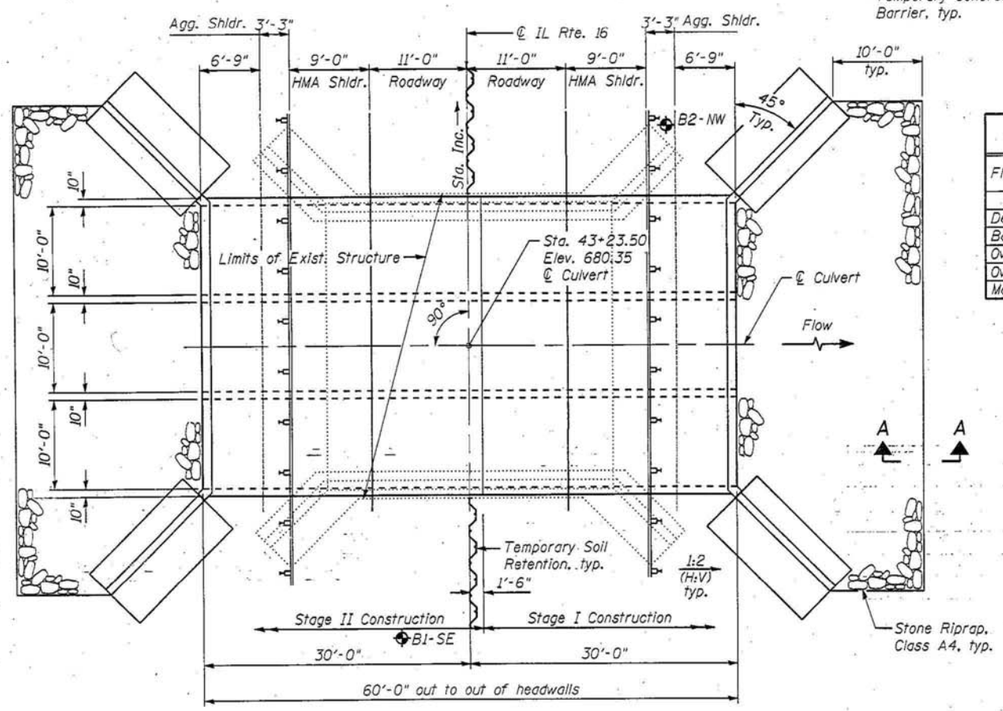

PLAN

WATERWAY INFORMATION

Drainage Area = 2.0 sq. mi. — Exist. Overtopping Elev. 679.18 @ Sta. 43+23.00; Prop. Overtopping Elev. 680.65 @ Sta. 43+23.00

Flood	Freq. Yr.	Q C.F.S.	Waterway Opening Sq. Ft. Existing	Waterway Opening Sq. Ft. Proposed	Nat. H.W.E.	Head - Ft. Exist.	Head - Ft. Prop.	Headwater El. Exist.	Headwater El. Prop.
	10	630	130	250	675.05	0.5	0.5	675.50	675.56
Design	50	1040	170	300	675.59	0.5	0.5	677.09	677.05
Base	100	1230	190	300	677.29	0.8	0.5	678.05	677.74
Overtopping Event (E)	<500 yr.								
Overtopping Event (P)	<500 yr.		Bridge/Weir	Bridge/Weir					
Max. Calc.	500	1690	230/260	300/20	679.71	0.9	1.0	680.59	680.67

10 yr Outlet Velocity from Existing Structure = 4.22 fps
10 yr Outlet Velocity from Proposed Structure = 5.55 fps

CURVE DATA

Δ = 7°06'00" (Lt.)
D = 0°51'37"
T = 413.13'
L = 825.20'
E = 12.80'
R = 6659.20'
S.E. = 2.2%
P.C. = Sta. 43+00.00
P.T. = Sta. 51+25.20
P.I. = Sta. 47+13.13
SE Transition from 43+00.00 (0.00%) to 43+51.55

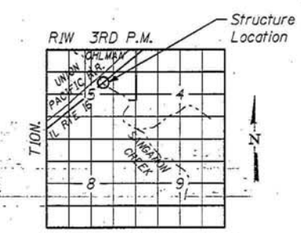

LOCATION SKETCH

DESIGN SCOUR ELEVATION TABLE

Design Scour Elevation (ft.)	Upstream	Downstream
	662.4	662.3

GENERAL PLAN
IL RTE. 16 OVER SANGAMON CREEK
FAP RTE. 325 SECTION 18(B-2, B-3)
MONTGOMERY COUNTY
STATION 43+23.50
STRUCTURE NO. 068-0509

PROJECT NO. 10005-2 / SCALE / DATE / / / DESIGN BY MCB/CME / DRAWN BY CFC / CHECKED BY MCB	SHEET NO. 1 / 1 SHEETS	F.A.P RTE. 325	SECTION 18(B-2, B-3)	COUNTY MONTGOMERY	TOTAL SHEETS / SHEET NO.
		CONTRACT NO. 72984			
		FED. ROAD DIST. NO.	ILLINOIS	FED. AID PROJECT	

PLOT DATE = 4/3/2012
FILE NAME = ...\B1B2B0509-72984-001-1sl.dgn
PLOT SCALE = 1 IN. = 4.0000 FT. / IN.
USER NAME = JMIL