Existing Structure: SN 069-0016 bridge 256' downstream. Constructed 1936.
the existing truss bridge is 2,232' long and 27'-6" wide.
To be removed after new structure is complete and traffic shifted to new structure.
Traffic Control: Existing structure to remain open to traffic during construction.
No Salvage

Benchmark: WW-5, Chiseled "□" top of curb in SE quadrant of junction of IL 104 and Washington Street. Station 84+22.20, 306.90' RT, Elevation 443.67

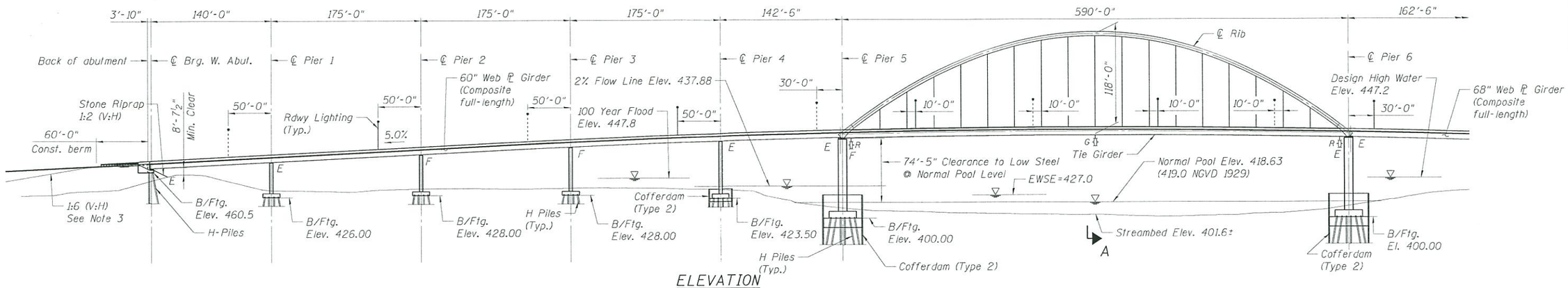

ELEVATION

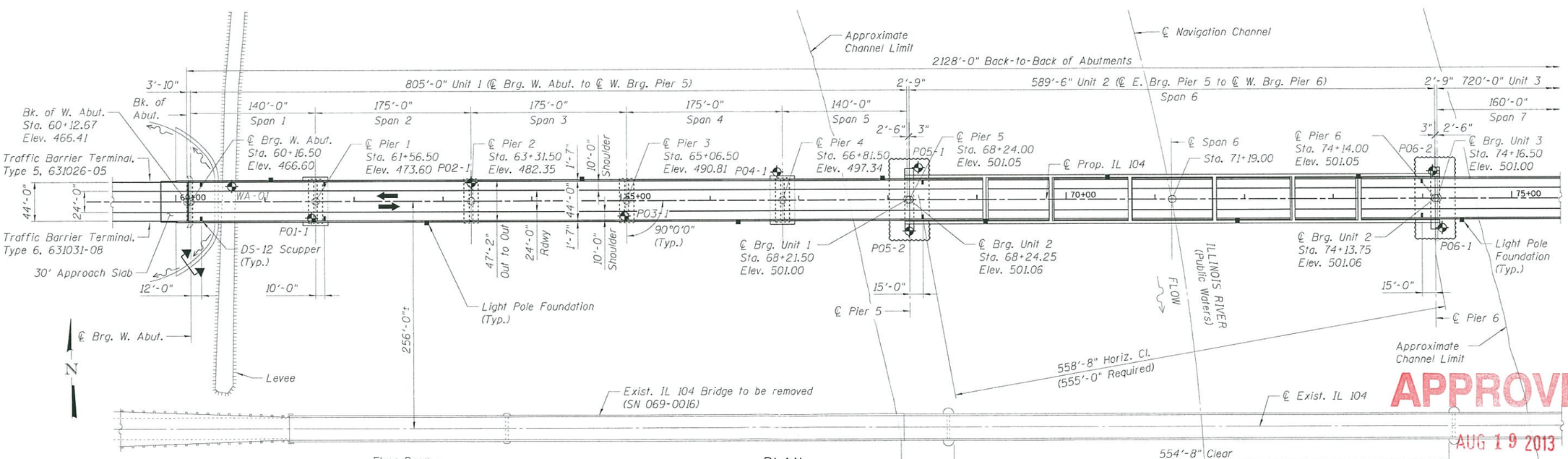

PLAN

APPROVED
AUG 19 2013
AS A BASIS FOR PREPARATION OF DETAILED PLANS

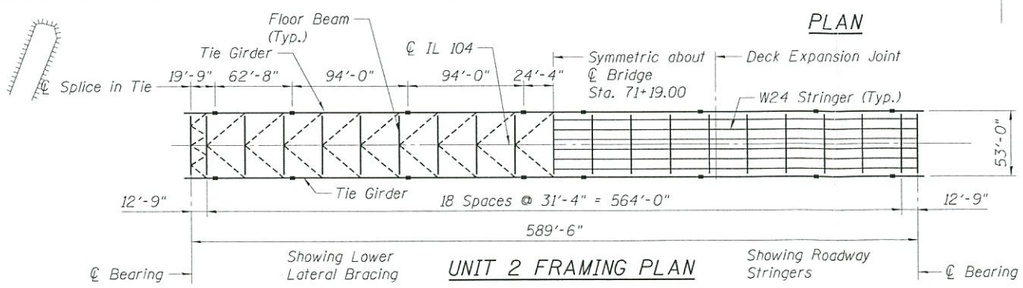

UNIT 2 FRAMING PLAN

Notes:

1. All Elevations are referenced to NAVD 1988 Datum unless noted otherwise. NAVD 1988 = NGVD 1929 - 0.37'
2. ⊕ denotes soil boring.
3. The embankment configuration shown shall be the minimum that must be placed and compacted prior to construction of the abutments.
4. The bridge deck and approach slabs shall be ground off up to ¼" to provide a smooth riding surface.

GENERAL PLAN & ELEVATION 1
ILLINOIS ROUTE 104 OVER
ILLINOIS RIVER (PUBLIC WATER)
F.A.P. RTE. 745 - SEC. 123B-2
MORGAN COUNTY, STATION 71+19.00
STRUCTURE NO. 069-0525

FILE NAME =	USER NAME =	DESIGNED - RSN	REVISED -	STATE OF ILLINOIS DEPARTMENT OF TRANSPORTATION	GENERAL PLAN & ELEVATION 1 OF 2
exp U.S. Services Inc. Chicago, IL BUILDINGS·EARTH & ENVIRONMENT·ENERGY INDUSTRIAL·INFRASTRUCTURE·SUSTAINABILITY	DATE - 07/19/2013	CHECKED - VCP	REVISED -		
	PLOT SCALE =	DRAWN - FD	REVISED -		
	PLOT DATE =	CHECKED - JLR	REVISED -		SHEET NO. 1 OF 5 SHEETS

F.A.P. RTE.	SECTION	COUNTY	TOTAL SHEETS	SHEET NO.
745	123B-2	MORGAN		
		CONTRACT NO. 72B58		
		ILLINOIS FED. AID PROJECT		

$$$$cnf_list_name$$$$ 8-21-2013,13:34:21 RITCHJL \\VFS-0244\DAVIVAULT_D-TRANS.07\TRDCH\D2012341-22\STRUCTURE\DIVISION\GRP0525\SHEET\GRP0525-TSL-202-TSL_SHT.DGN

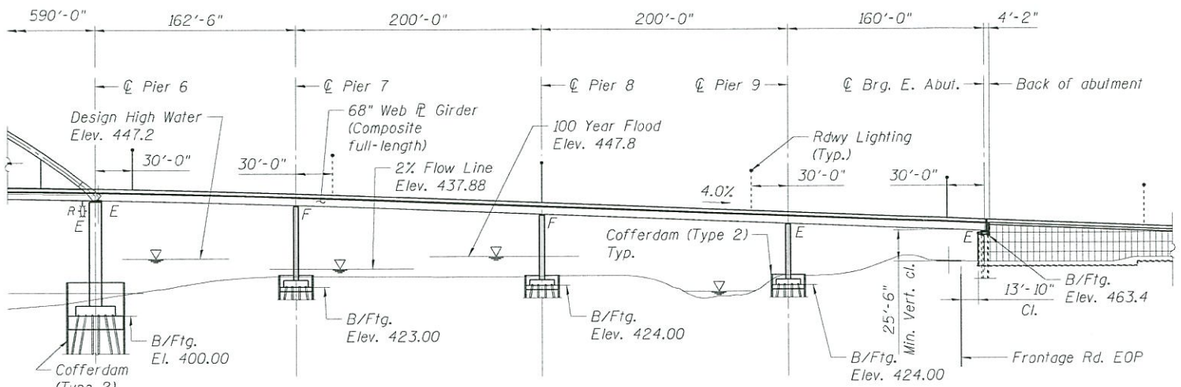

ELEVATION

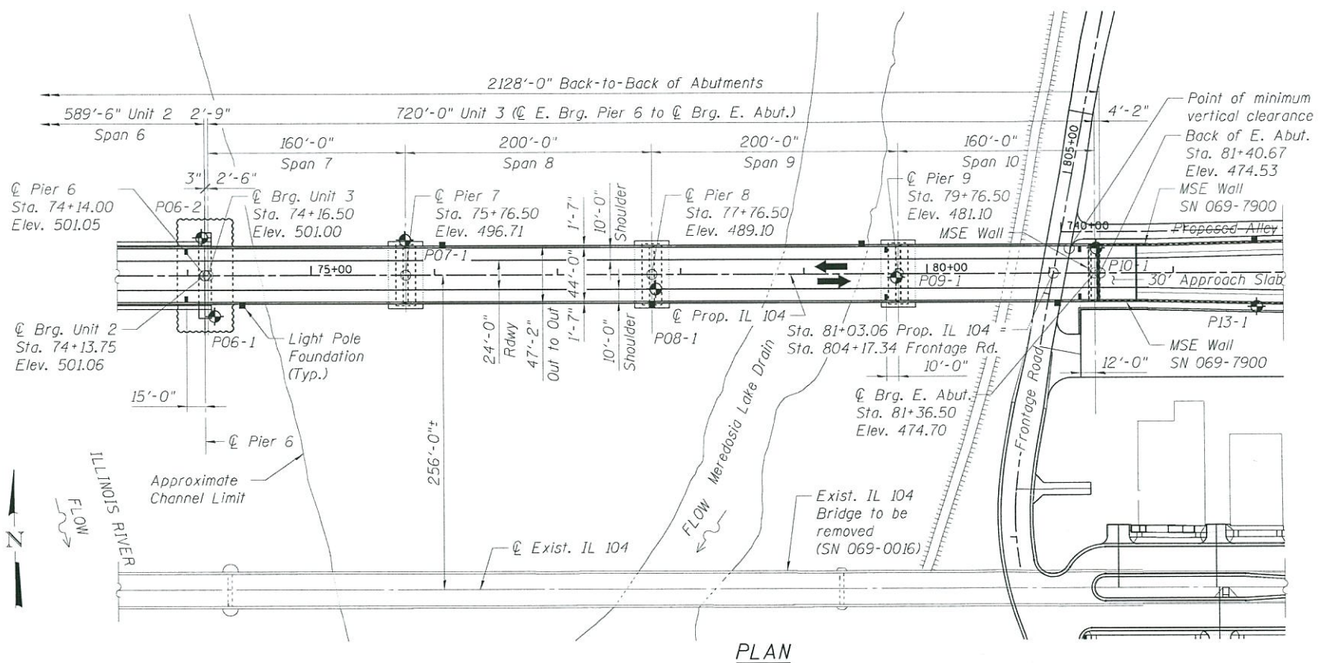

PLAN

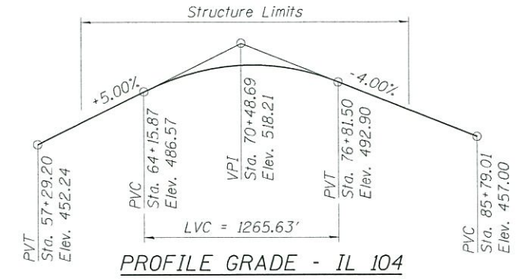

PROFILE GRADE - IL 104

The profile grade depicts the final elevations after grinding. Up to ¼" will be ground off the bridge deck and approach slab. See Note 4, Sheet 1 of 5.

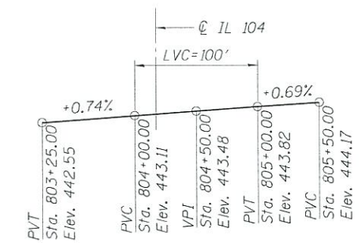

PROFILE GRADE - FRONTAGE ROAD

HIGHWAY CLASSIFICATION

F.A.P. Rte. 745 - IL Rte. 104
Functional Class: Rural Minor Arterial
ADT: 2,760 (2012); 3,650 (2040)
ADTT: 800 (2012); 1,059 (2040)
DHV: 347
Design Speed: 45 m.p.h.
Posted Speed: 40 m.p.h.
Two-Way Traffic
Directional Distribution: 50:50

LOADING HL-93

Allow 50#/sq. ft. for future wearing surface.

DESIGN SPECIFICATIONS

2012 AASHTO LRFD Bridge
Design Specifications, 6th Edition

DESIGN STRESSES

FIELD UNITS

f'c = 3,500 psi
fy = 60,000 psi (Reinforcement)
fy = 50,000 psi (M270 Grade 50W)
fy = 70,000 psi (M270 Grade HPS 70W.
Unit 2 Tie Girders)

Arch Hangers (ASTM A586 structural strand):
fu = 220,000 psi for Class A coating
fu = 200,000 psi for Class C coating

SEISMIC DATA

Seismic Performance Zone (SPZ) = 1
Design Spectral Acceleration at 1.0 sec. (S_{D1}) = 0.135
Design Spectral Acceleration at 0.2 sec. (S_{DS}) = 0.226
Soil Site Class = D

APPROVED

AUG 19 2013

AS A BASIS FOR
PREPARATION OF DETAILED PLANS

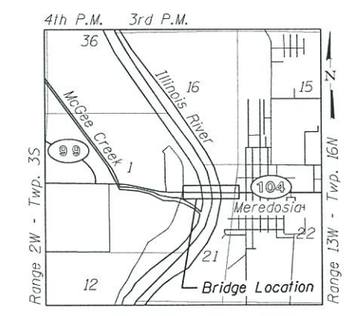

LOCATION SKETCH

WATERWAY INFORMATION TABLE

Drainage Area = 26,030 sq. mi Max. Recorded H.W.E. = 446.6 ft
Prop. Low Grade Elev. = 466.53 ft, Sta. 60+15

Flood	Frequency (yr.)	Discharge (cfs.)	Waterway Opening (sf) Existing	Waterway Opening (sf) Proposed	Natural HWE	Created Head Existing	Created Head Proposed	Headwater Elevation Existing	Headwater Elevation Proposed
	10	99,400	38,175	40,706	443.6	0.0	0.0	443.6	443.6
Design	50	118,300	44,826	47,807	447.2	0.0	0.0	447.2	447.2
Base	100	125,500	45,982	48,037	447.8	0.0	0.0	447.8	447.7
Max. Calc.	500	139,100	47,863	51,037	448.8	0.0	0.0	448.8	448.8

DESIGN SCOUR ELEVATION TABLE

	Pier 1	Pier 2	Pier 3	Pier 4	Pier 5	Pier 6	Pier 7	Pier 8	Pier 9
Ground Elev.	433.4	435.4	435.8	431.2	410.0	410.1	431.1	431.4	431.3
Q100	426.3	428.3	428.7	394.5	388.6	388.6	394.4	424.3	424.2
Q500	426.1	428.1	428.5	394.3	388.4	388.4	394.3	424.1	424.1

GENERAL PLAN & ELEVATION 2
ILLINOIS ROUTE 104 OVER
ILLINOIS RIVER (PUBLIC WATER)
F.A.P. RTE. 745 - SEC. 123B-2
MORGAN COUNTY, STATION 71+19.00
STRUCTURE NO. 069-0525

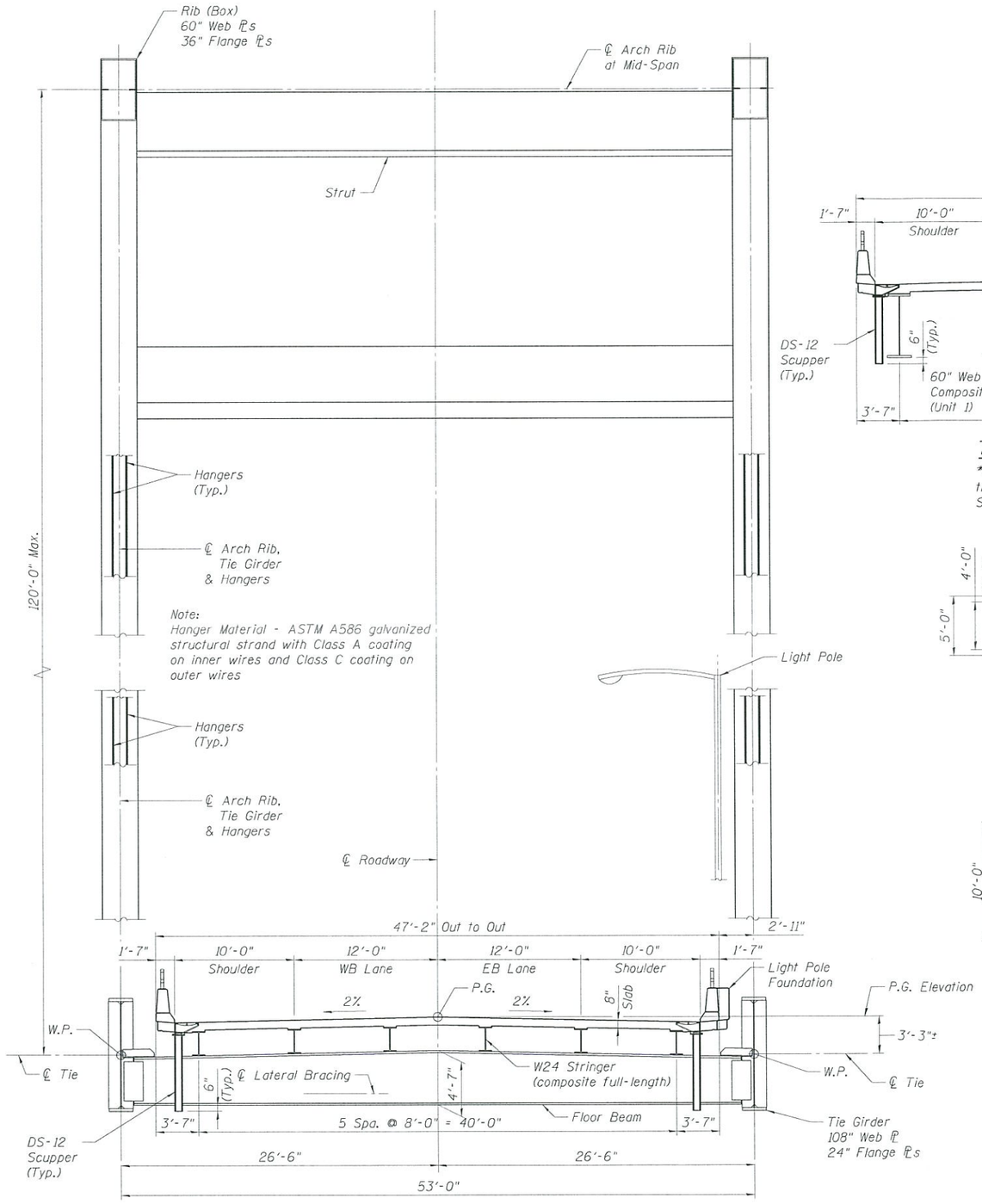

SECTION A-A - UNIT 2

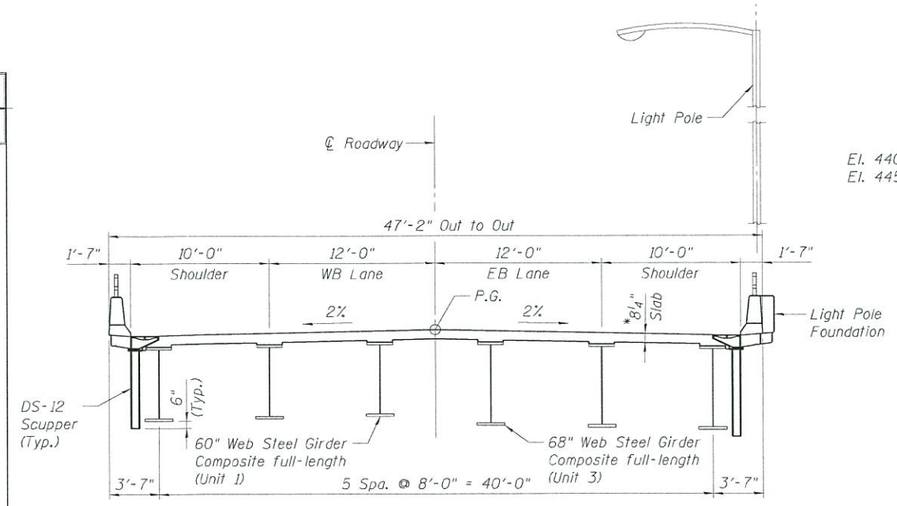

TYPICAL SECTION - UNITS 1 & 3

*Before grinding. Max. of ¼" will be ground off the bridge deck and approach slab. See Note 4 Sheet 1 of 5.

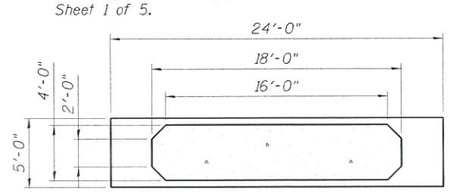

SECTION B-B

(Dimensions subject to change during design)

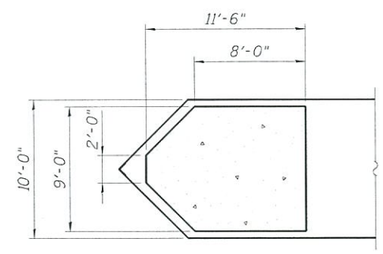

SECTION C-C

(Dimensions subject to change during design)

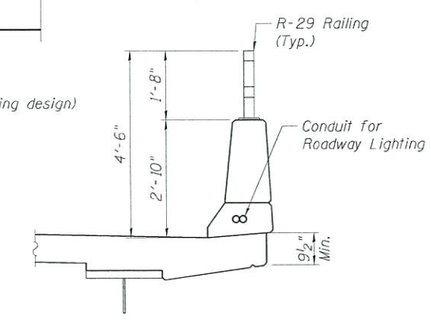

PARAPET

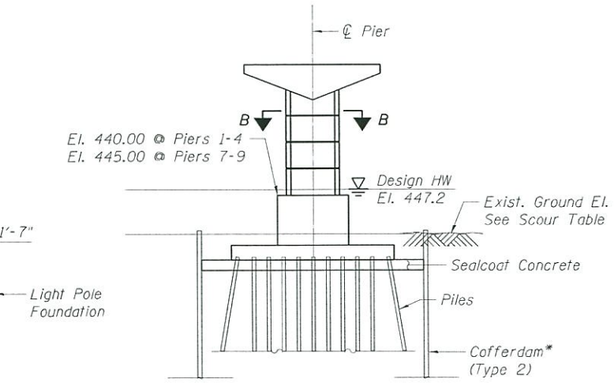

PIERS 4, 7, 8, & 9

*No cofferdam required at Piers 1, 2 & 3

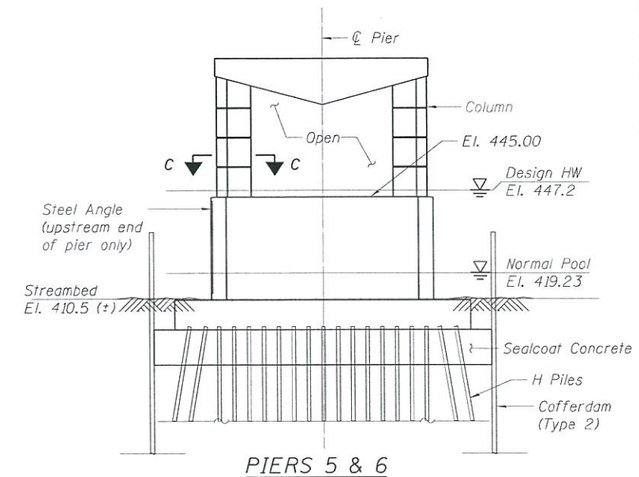

PIERS 5 & 6

APPROVED

AUG 19 2013

AS A BASIS FOR
PREPARATION OF DETAILED PLANS

DETAILS 1
ILLINOIS ROUTE 104 OVER
ILLINOIS RIVER (PUBLIC WATER)
F.A.P. RTE. 745 - SEC. 123B-2
MORGAN COUNTY, STATION 71+19.00
STRUCTURE NO. 069-0525

FILE NAME =	USER NAME =	DESIGNED - RSN	REVISED -	STATE OF ILLINOIS DEPARTMENT OF TRANSPORTATION	DETAILS 1 OF 3	F.A.P. RTE.	SECTION	COUNTY / TOTAL SHEETS / SHEET NO.
exp U.S. Services Inc. Chicago, IL BUILDINGS·EARTH & ENVIRONMENT·ENERGY INDUSTRIAL·INFRASTRUCTURE·SUSTAINABILITY	DATE - 07/19/2013	CHECKED - VCP	REVISED -			745	123B-2	MORGAN
	PLOT SCALE =	DRAWN - FD	REVISED -					CONTRACT NO. 72B58
	PLOT DATE =	CHECKED - JLR	REVISED -		SHEET NO. 3 OF 5 SHEETS			ILLINOIS FED. AID PROJECT

$$$$ref list none$$$$
8-21-2013, 13:35:40 RITCHJL \\FS-0024\DMV\AVAIL TO TRANS 07\TRDCH\2080123A1-07\STRUCT\CAD\TSL\069-0525\SHEET\069-0525-TSL-012-TSL SHT.DGN

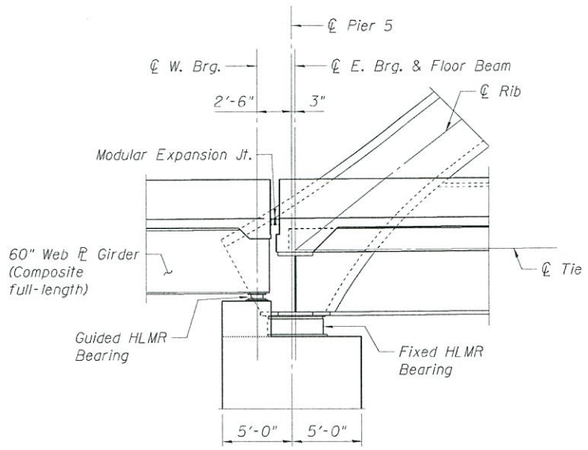

SECTION THROUGH EXPANSION JOINT
PIER 5

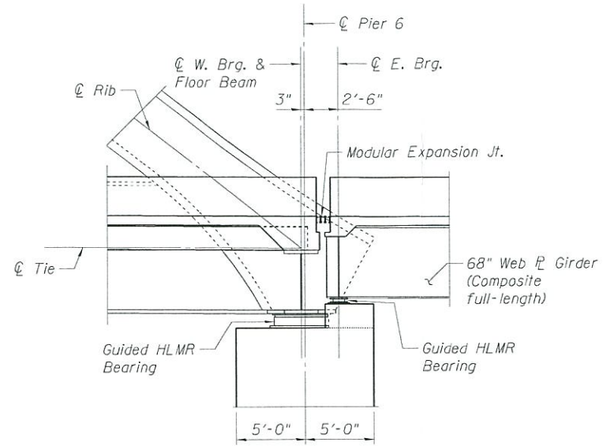

SECTION THROUGH EXPANSION JOINT
PIER 6

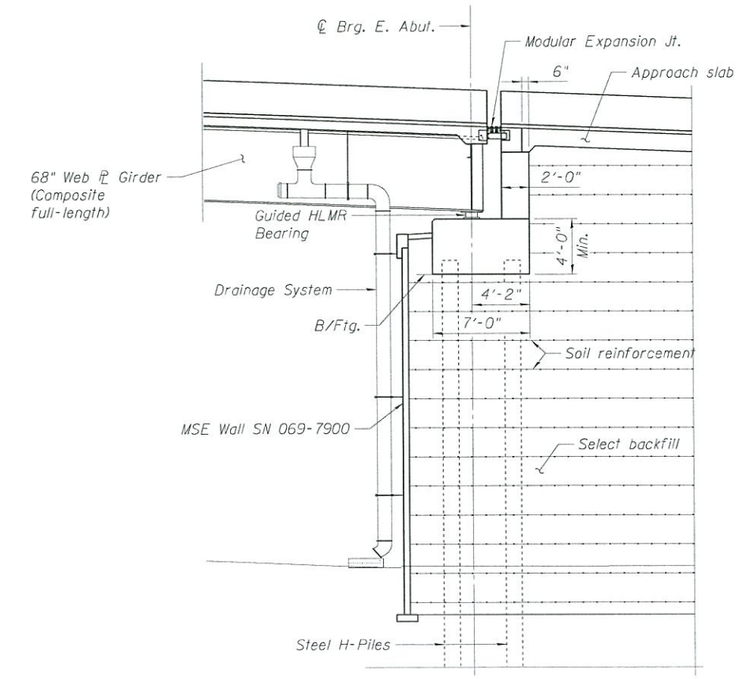

SECTION THROUGH EAST ABUTMENT

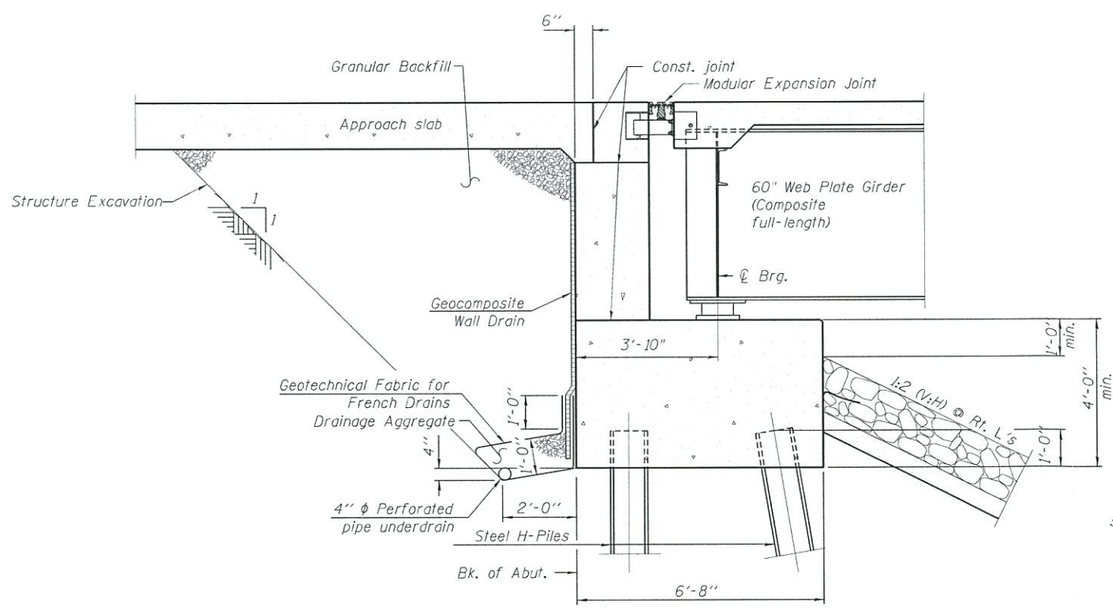

SECTION THRU WEST ABUTMENT

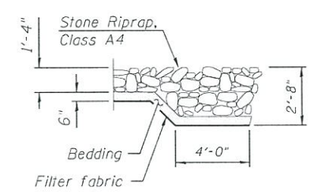

FLANK STONE RIPRAP DETAIL

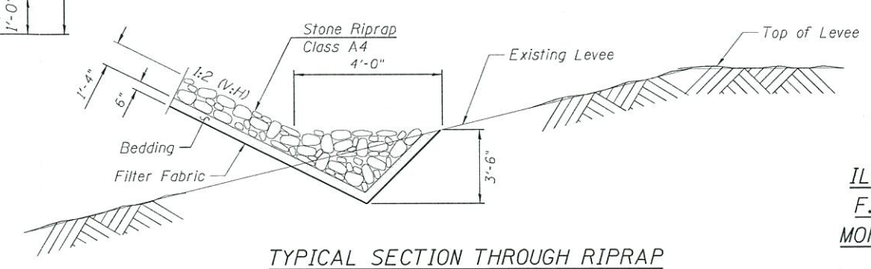

TYPICAL SECTION THROUGH RIPRAP

APPROVED
AUG 19 2013
AS A BASIS FOR
PREPARATION OF DETAILED PLANS

DETAILS 2
ILLINOIS ROUTE 104 OVER
ILLINOIS RIVER (PUBLIC WATER)
F.A.P. RTE. 745 - SEC. 123B-2
MORGAN COUNTY, STATION 71+19.00
STRUCTURE NO. 069-0525

FILE NAME =	USER NAME =	DESIGNED - RSN	REVISED -	STATE OF ILLINOIS DEPARTMENT OF TRANSPORTATION	DETAILS 2 OF 3	F.A.P. RTE.	SECTION	COUNTY / TOTAL SHEETS / SHEET NO.
exp U.S. Services Inc. Chicago, IL BUILDINGS·EARTH & ENVIRONMENT·ENERGY INDUSTRIAL·INFRASTRUCTURE·SUSTAINABILITY	DATE - 07/19/2013	CHECKED - VCP	REVISED -			745	123B-2	MORGAN
	PLOT SCALE =	DRAWN - FD	REVISED -					CONTRACT NO. 72B58
	PLOT DATE =	CHECKED - JLR	REVISED -		SHEET NO. 4 OF 5 SHEETS			ILLINOIS FED. AID PROJECT

$$$$rof_list_name$$$$ RITCHJL \\FS-0244\AM\VAULT\D-TRANS_BY\TRDCH\0202234-02\STRUCT\CAD\TSL\B6290525\SHEET\B6290525-TSL-013-TSL SHT.DGN 8-21-2013, 13:37:28

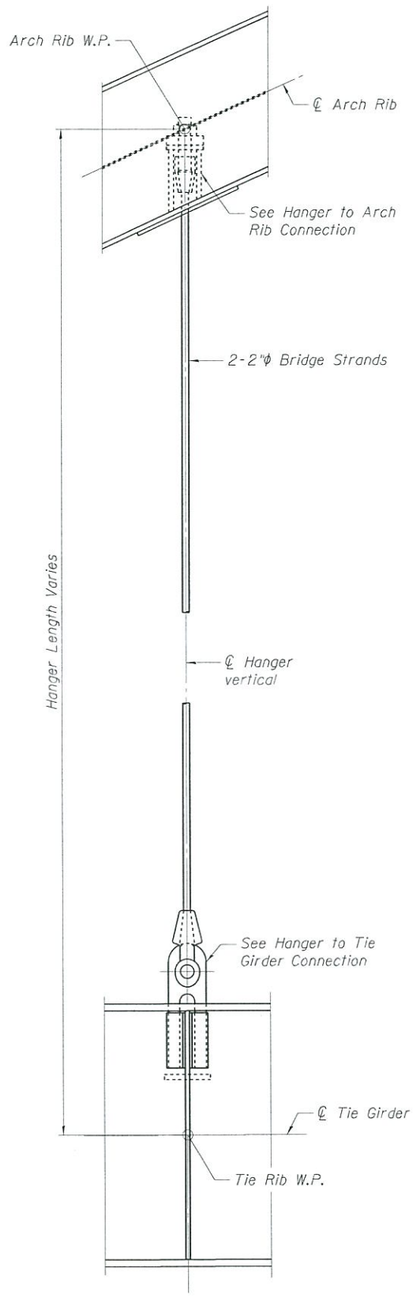

HANGER ELEVATION

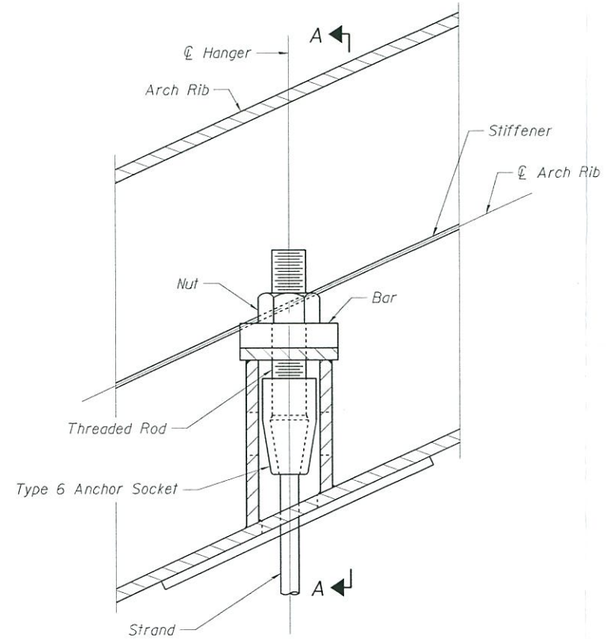

HANGER TO ARCH RIB CONNECTION

(Section thru Arch Rib)

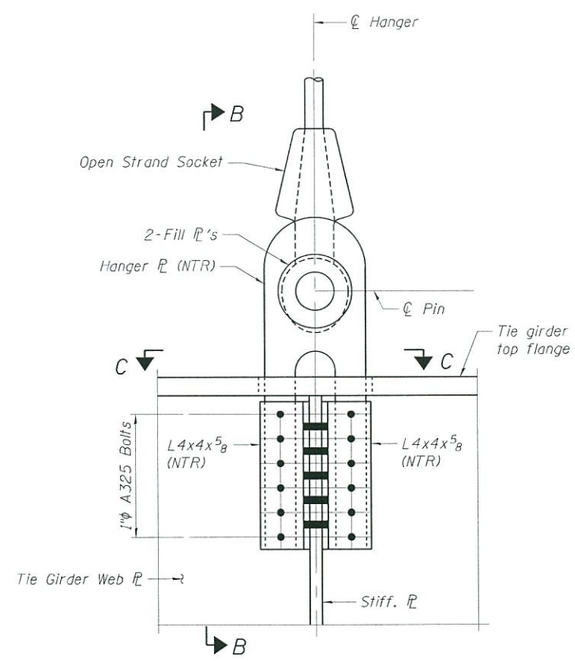

HANGER TO TIE GIRDER CONNECTION

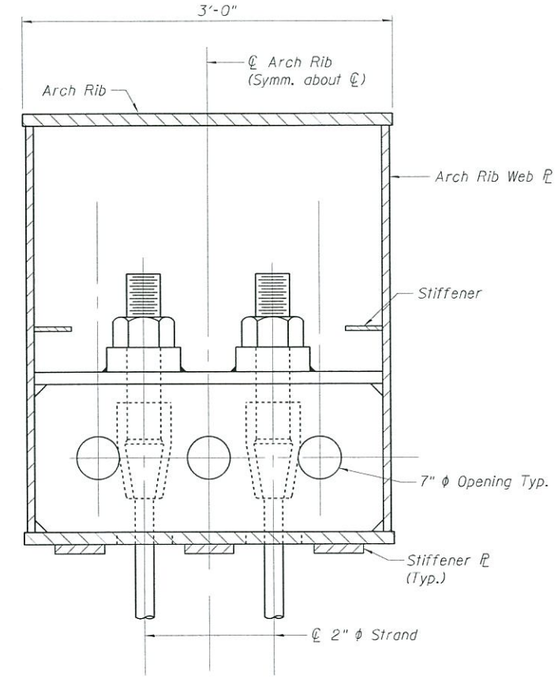

SECTION A-A

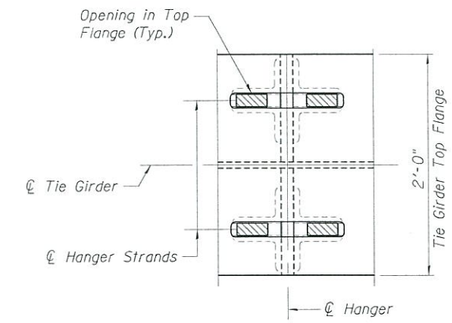

SECTION C-C

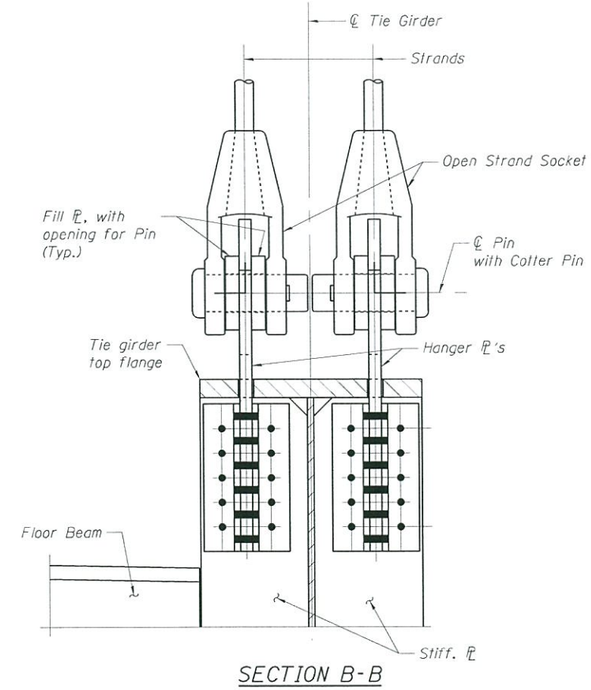

SECTION B-B

Notes:

1. Redundancy: Hangers with one strand removed satisfy all AASHTO strength requirements with the live load on the span (including construction loads) reduced to the equivalent of no more than two lanes of HL-93.
2. Sockets and their connections to the strand shall be capable of developing the specified Minimum Breaking Strength of the strand.

APPROVED

AUG 19 2013

AS A BASIS FOR PREPARATION OF DETAILED PLANS

DETAILS 3
ILLINOIS ROUTE 104 OVER
ILLINOIS RIVER (PUBLIC WATER)
F.A.P. RTE. 745 - SEC. 123B-2
MORGAN COUNTY, STATION 71+19.00
STRUCTURE NO. 069-0525

FILE NAME =	USER NAME =	DESIGNED - RSN	REVISED -	STATE OF ILLINOIS DEPARTMENT OF TRANSPORTATION	DETAILS 3 OF 3	F.A.P. RTE.	SECTION	COUNTY	TOTAL SHEETS / SHEET NO.
exp U.S. Services Inc. Chicago, IL BUILDINGS-EARTH & ENVIRONMENT-ENERGY INDUSTRIAL-INFRASTRUCTURE-SUSTAINABILITY	DATE - 07/19/2013	CHECKED - VCP	REVISED -			745	123B-2	MORGAN	
	PLOT SCALE =	DRAWN - HBJ	REVISED -					CONTRACT NO. 72B58	
	PLOT DATE =	CHECKED - JLR	REVISED -		SHEET NO. 5 OF 5 SHEETS			ILLINOIS FED. AID PROJECT	

..\069525-TSL-021-STEELDETAIL.DGN,..\069525-TSL-021-STEELDETAIL.DGN,..\VALSNUM-72B58-021-BORDER.DGN
8/21/2013,13:36:02 RITCHJL \\FS-0244\MAVALT,D-TRANS,07\TRDCH\V0201234\22\STRACT\CADV\SL\069525\SHEET\069525-TSL-014-TSL-SH1.DGN