Bench Mark NE-2:
Chiseled "□" on W side of N headwall on culvert over a drainage ditch on Boy Scout Road.
Elev 497.51

Existing Structure: None

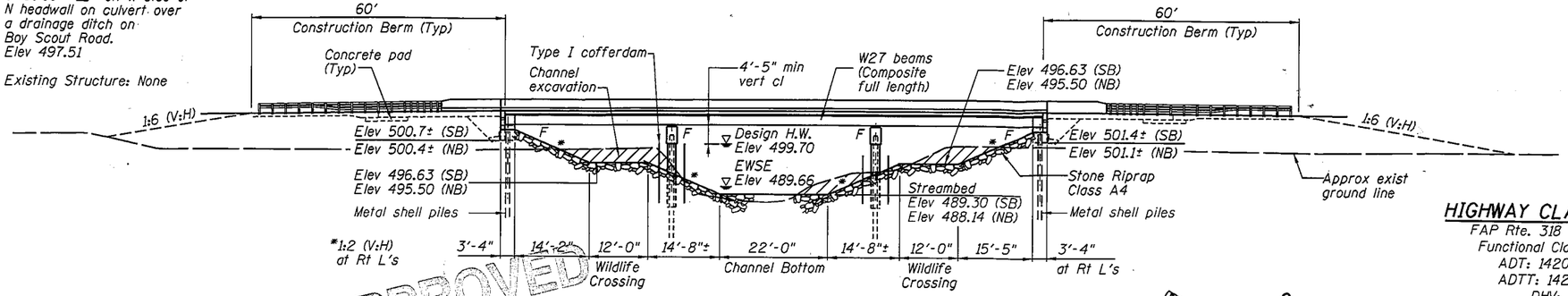

ELEVATION

APPROVED
SEP 24 2013
AS A BASIS FOR PREPARATION OF DETAILED PLANS

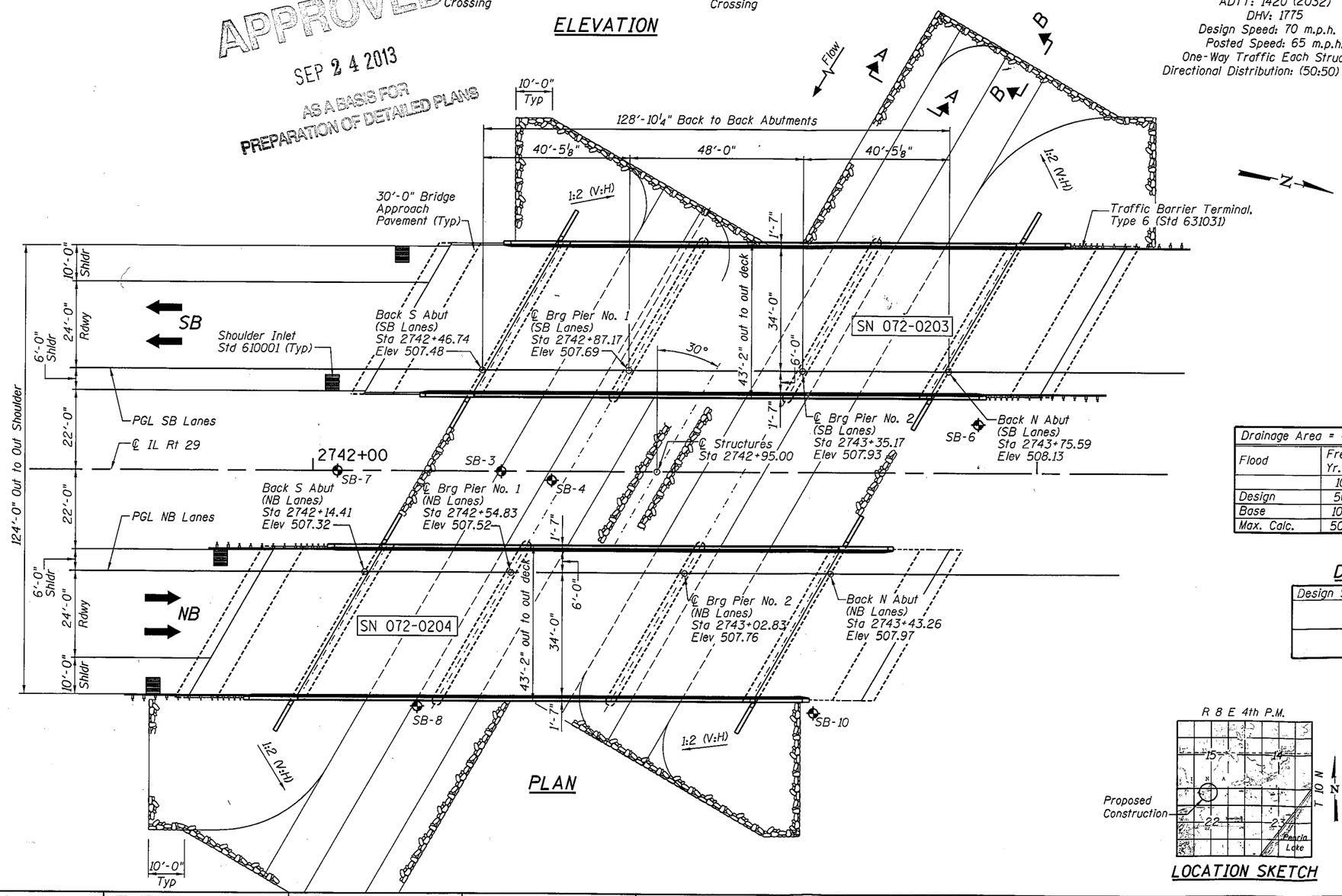

PLAN

HIGHWAY CLASSIFICATION

FAP Rte. 318 - IL Rte. 29
Functional Class: Freeway
ADT: 14200 (2032)
ADTT: 1420 (2032)
DHV: 1775
Design Speed: 70 m.p.h.
Posted Speed: 65 m.p.h.
One-Way Traffic Each Structure
Directional Distribution: (50:50) (NB:SB)

DESIGN SPECIFICATIONS

2012 AASHTO LRFD Bridge Design Specifications
6th Edition

DESIGN STRESSES

FIELD UNITS

f'c = 3,500 psi
fy = 60,000 psi (Reinforcement)
fy = 50,000 psi (M270 Grade 50W)

LOADING HL-93

Allow 50#/sq. ft. for future wearing surface.

SEISMIC DATA

Seismic Performance Zone (SPZ) = 1
Design Spectral Acceleration at 1.0 sec. (S_{D1}) = 0.108 g
Design Spectral Acceleration at 0.2 sec. (S_{DS}) = 0.169 g
Soil Site Class = D

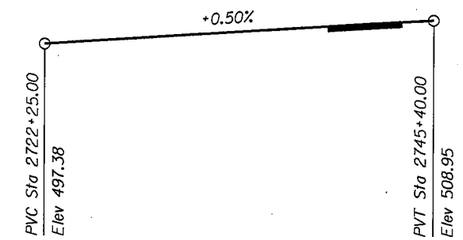

PROFILE GRADE - IL RT 29

WATERWAY INFORMATION

Drainage Area = 4.14 sq mi Low Grade Elev. 506.41 @ Sta. 2759+56

Flood	Freq. Yr.	Q C.F.S.	Opening Sq. Ft. Exist.	Opening Sq. Ft. Prop.	Nat. H.W.E.	Head - Ft. Exist.	Head - Ft. Prop.	Headwater El. Exist.	Headwater El. Prop.
	10	1704	--	345	497.5	--	0.0	--	497.5
Design	50	2890	--	534	499.7	--	0.0	--	499.7
Base	100	3456	--	621	500.6	--	0.0	--	500.6
Max. Calc.	500	4867	--	778	502.2	--	0.1	--	502.3

DESIGN SCOUR ELEVATION TABLE

Design Scour Elev (ft.)	S Abut	Pier 1	Pier 2	N Abut
Q100	SB 500.7 NB 500.4	SB 486.8 NB 485.6	SB 486.8 NB 485.6	SB 501.4 NB 501.1
Q500	SB 500.7 NB 500.4	SB 486.8 NB 485.6	SB 486.8 NB 485.6	SB 501.4 NB 501.1

LOCATION SKETCH

GENERAL PLAN AND ELEVATION
FAP ROUTE 318 (IL 29)
OVER DICKISON RUN
SECTION 72-6-2
PEORIA COUNTY
STA 2742+95.00
STRUCTURE NO. 072-0203 (SB)
STRUCTURE NO. 072-0204 (NB)

FILE NAME = H:\Pr_j_IDOT\5578-IL29_Extension\CADD_Structural\IL29 over Dickinson Run\ts&l.dgn

HOMER L. CHASTAIN & ASSOCIATES, LLP
CONSULTING ENGINEERS
184-001397

USER NAME = ebenz	DESIGNED - ACB	REVISED -
PLOT TIME = 1:18:46 PM	CHECKED - JMB	REVISED -
PLOT SCALE = 32.0089 ' / in.	DRAWN - RLK	REVISED -
PLOT DATE = 9/12/2013	CHECKED - JMB	REVISED -

STATE OF ILLINOIS
DEPARTMENT OF TRANSPORTATION

GENERAL PLAN AND ELEVATION

SHEET NO. 1 OF 2 SHEETS

F.A.P. RTE.	SECTION	COUNTY	TOTAL SHEETS	SHEET NO.
318	72-6-2	PEORIA		

CONTRACT NO. 68762
ILLINOIS FED. AID PROJECT

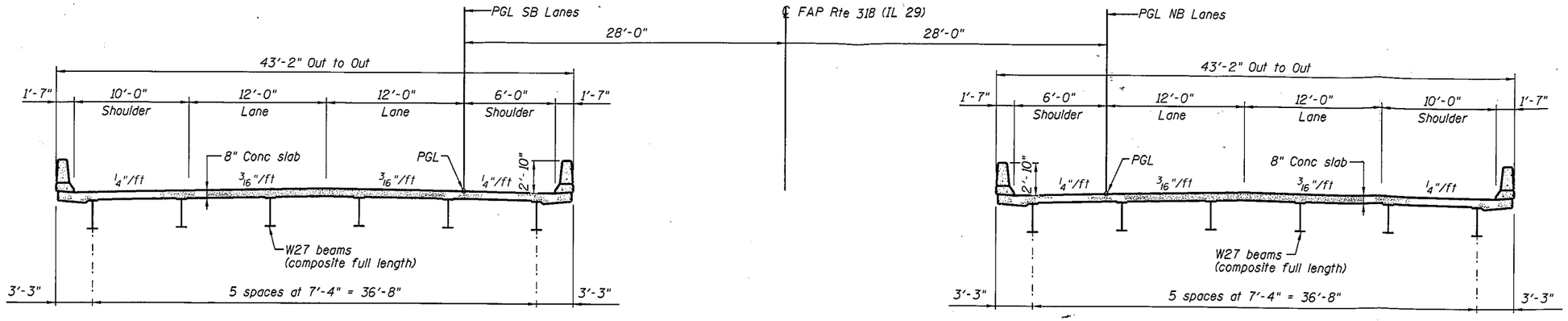

CROSS SECTION

APPROVED
SEP 24 2013
AS A BASIS FOR
PREPARATION OF DETAILED PLANS

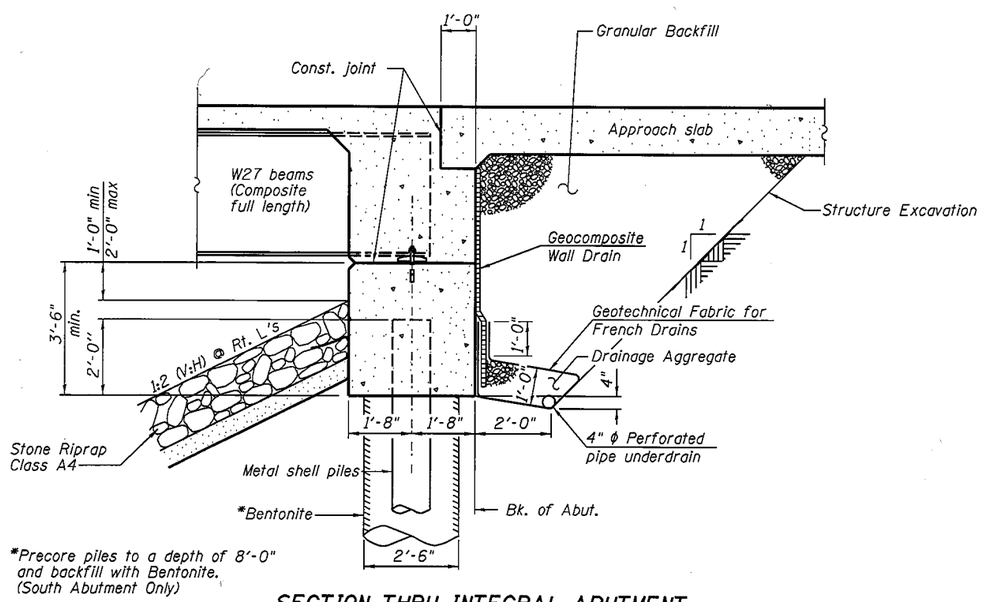

*Precore piles to a depth of 8'-0" and backfill with Bentonite. (South Abutment Only)

SECTION THRU INTEGRAL ABUTMENT
(Horiz. dim. @ Rt. L's)

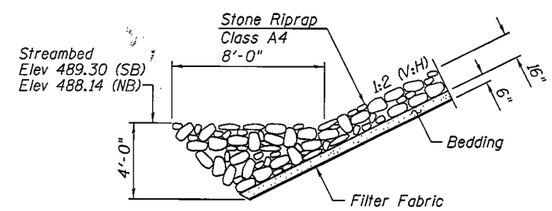

SECTION A-A

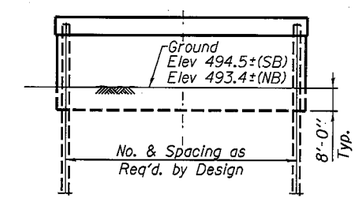

PIER SKETCH

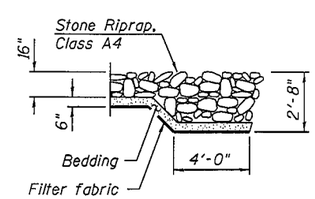

SECTION B-B

DETAILS
FAP ROUTE 318 (IL 29)
OVER DICKISON RUN
SECTION 72-6-2
PEORIA COUNTY
STA 2742+95.00
STRUCTURE NO. 072-0203 (SB)
STRUCTURE NO. 072-0204 (NB)

FILE NAME = H:\P_1001\15579-IL29_Extension\CADD_Structural\IL29 over Dickinson Run\ts61.dgn

HOMER L. CHASTAIN & ASSOCIATES, LLP CONSULTING ENGINEERS 184-001597	USER NAME = abenz	DESIGNED - ACB	REVISED -
	PLOT TIME = 1:18:52 PM	CHECKED - JMB	REVISED -
	PLOT SCALE = 32.0000 ' / in.	DRAWN - RLK	REVISED -
	PLOT DATE = 9/12/2013	CHECKED - JMB	REVISED -

STATE OF ILLINOIS
DEPARTMENT OF TRANSPORTATION

DETAILS

SHEET NO. OF SHEETS

F.A.P. RTE.	SECTION	COUNTY	TOTAL SHEETS	SHEET NO.
318	72-6-2	PEORIA		
		CONTRACT NO. 68762		
		ILLINOIS FED. AID PROJECT		