Benchmark: Chisled "□" North end of East abutment of S.N. 072-0063, Elev. 478.42.

Existing Structure: S.N. 072-0063. Originally built in 1922 as S.B.I. Route 8, Section 11B as a two-span through truss structure. In 1972, the bridge was widened and reconstructed as S.B.I. Route 8, Section 11BR. The existing trusses were removed, the existing closed abutments were abandoned and new stub abutments on steel H-piles were added, two new pile bent piers on H-piles were added and the existing pier was widened. The resulting four-span superstructure consists of 11 - 21" & 27" deep PPC Deck Beams. 238'-0" Bk. to Bk. abutments, 33'-0" out to out. Structure to be removed and replaced. Traffic to be maintained utilizing stage construction.

No salvage

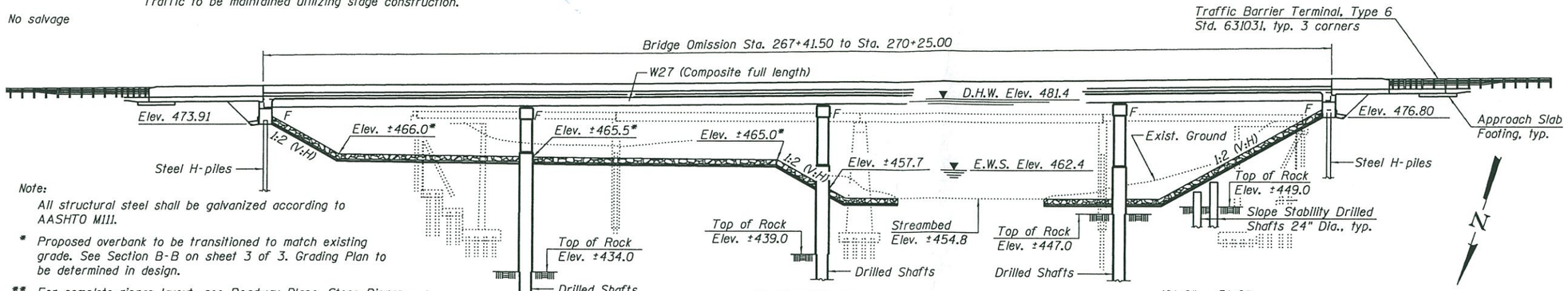

Note:

All structural steel shall be galvanized according to AASHTO M111.

* Proposed overbank to be transitioned to match existing grade. See Section B-B on sheet 3 of 3. Grading Plan to be determined in design.

** For complete riprap layout, see Roadway Plans. Stone Riprap, Class A5 and Filter Fabric pay items included with Roadway Quantities.

ELEVATION

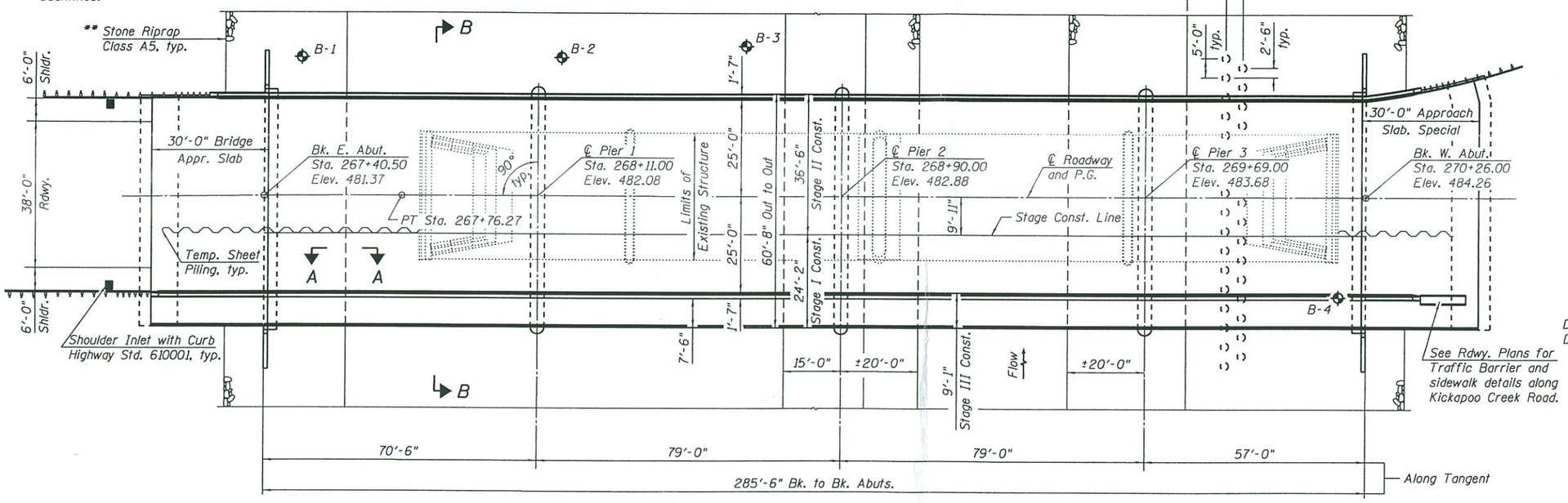

PLAN

DESIGN SCOUR ELEVATION TABLE

	E. Abut.	Pier 1	Pier 2	Pier 3	W. Abut.
0100	473.91	450.50	439.80	439.80	476.80
0500	473.91	450.50	439.80	439.80	476.80

WATERWAY INFORMATION TABLE

Drainage Area = 290 sq. mi.

Exist. Low Grade Elev. 475.3 at Sta. 3+75
Prop. Low Grade Elev. 475.3 at Sta. 3+75

Flood	Freq. Yr.	Q C.F.S.	Opening Sq. Ft. Exist.	Opening Sq. Ft. Prop.	Nat. H.W.E.	Head - Ft. Exist.	Head - Ft. Prop.	Headwater El. Exist.	Headwater El. Prop.
Overtopping	<5							475.30	475.30
Overtopping	10	17,560	2,577	3,550	477.00	0.40	0.20	477.40	477.20
Design	50	29,360	2,577	4,020	481.40	0.20	0.10	481.60	481.50
Base	100	35,600	2,577	4,020	483.20	0.10	0.10	483.30	483.30
Max. Calc.	500	51,560	2,577	4,020	485.40	0.10	0.10	485.50	485.50

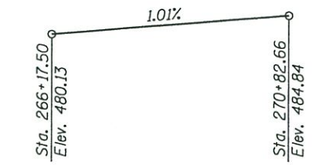

PROPOSED PROFILE GRADE

HIGHWAY CLASSIFICATION

F.A.U. 6659 (Farmington Road)
Functional Class: Collector (Urban)
ADT: 12,653 (2014) / 14,730 (2034)
ADTT: 468 (2014) / 777 (2023)
DHV: 1,473 (2034)
Design Speed: 45 m.p.h.
Posted Speed: 45 m.p.h.
2-Way Traffic
Directional Distribution: 50/50

LOADING HL-93

Allow 50#/sq. ft. for future wearing surface.

DESIGN SPECIFICATIONS

2012 AASHTO LRFD Bridge Design Specifications, 6th Edition

DESIGN STRESSES

FIELD UNITS

f'c = 3,500 psi
fy = 60,000 psi (Reinforcement)
fy = 50,000 psi (M270 Grade 50)

SEISMIC DATA

Seismic Performance Zone (SPZ) = 1
Design Spectral Acceleration at 1.0 sec. (S_{D1}) = 0.079g
Design Spectral Acceleration at 0.2 sec. (S_{DS}) = 0.131g
Soil Site Class C

CURVE DATA

Δ = 3° 04' 56" (RT)
D = 0° 52' 46"
R = 6,515.60'
T = 175.29'
L = 350.50'
E = 2.36'
P.C. STA. = 264+25.77
PI STA. = 266+01.06
P.T. STA. = 267+76.27
S.E. - None

APPROVED
SEP 15 2014
AS A BASIS FOR PREPARATION OF DETAILED PLANS

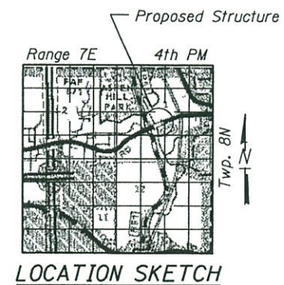

LOCATION SKETCH

GENERAL PLAN
FARMINGTION ROAD OVER KICKAPOO CREEK
FAU 6659 - SECTION 11BR-1
PEORIA COUNTY
STATION 268+90
STRUCTURE NO. 072-0245

design firm no. 184001036 whks engineers + planners + land surveyors

USER NAME = dheberling	DESIGNED - SDS	REVISED	
FILE NAME = 0720245-68185.dgn	CHECKED - CWC	REVISED	
PLOT SCALE = 0:2 '/' / in.	DRAWN - DLH	REVISED	
PLOT DATE = 9/10/2014	CHECKED - SDS/CWC	REVISED	

STATE OF ILLINOIS
DEPARTMENT OF TRANSPORTATION

SHEET NO. 1 OF 3 SHEETS

F.A.U. RTE.	SECTION	COUNTY	TOTAL SHEETS	SHEET NO.
6659	11BR-1	PEORIA	3	1

CONTRACT NO. 68185

ILLINOIS FED. AID PROJECT

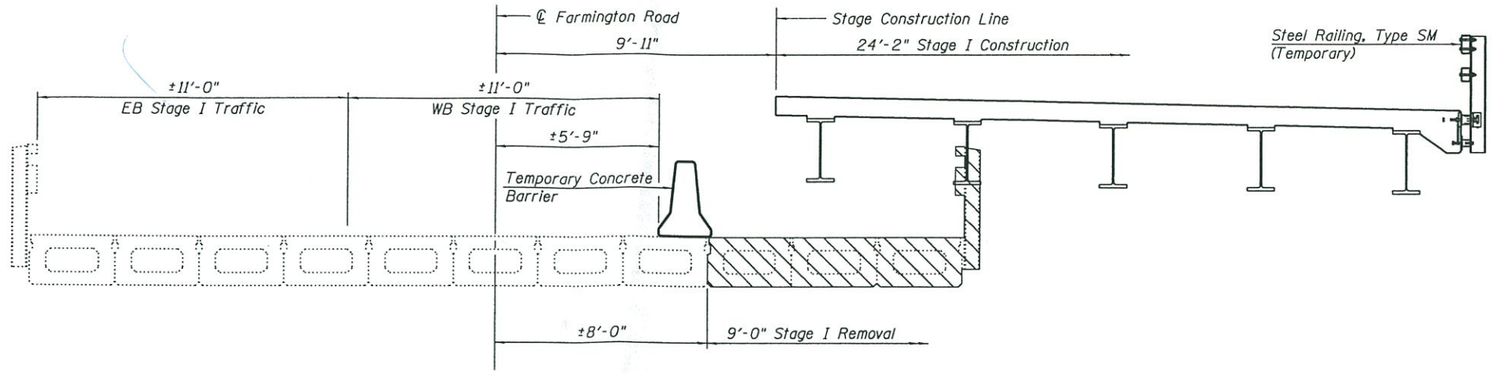

Notes:

1. All Cross Sections are looking West.
2. Portions of the original closed abutment and existing pile bent abutment to be removed shall not be completed in Stage I Removal operation. Removal of abutment portions shall occur during Stage II Removal operation.
3. The condition of the existing deck beams for the duration of Stage I Traffic shall be verified during final design.

STAGE I CONSTRUCTION

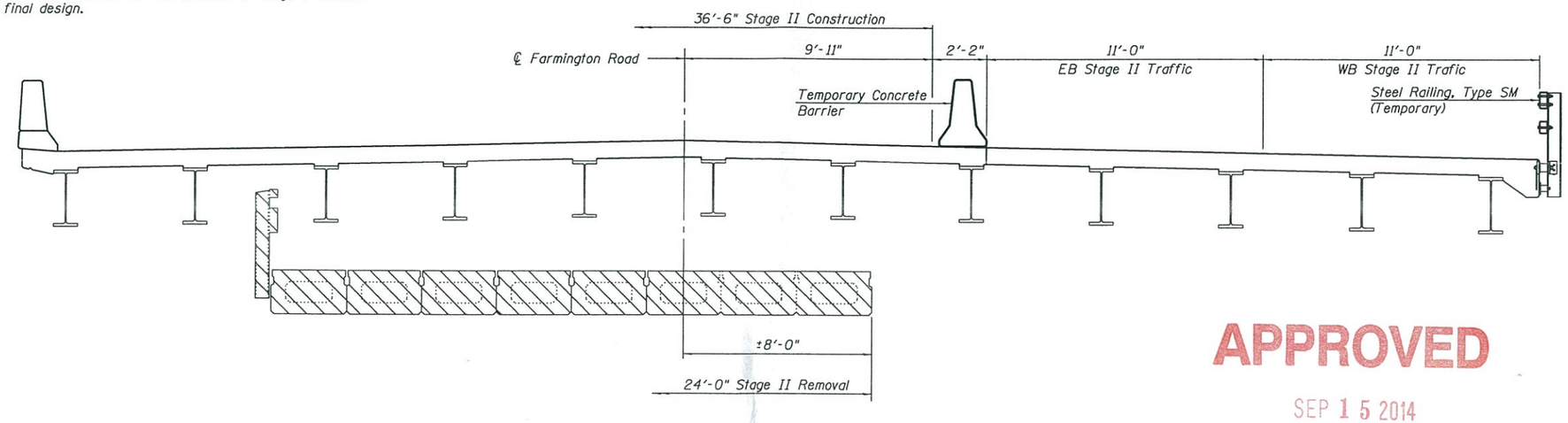

STAGE II CONSTRUCTION

APPROVED

SEP 15 2014

AS A BASIS FOR
PREPARATION OF DETAILED PLANS

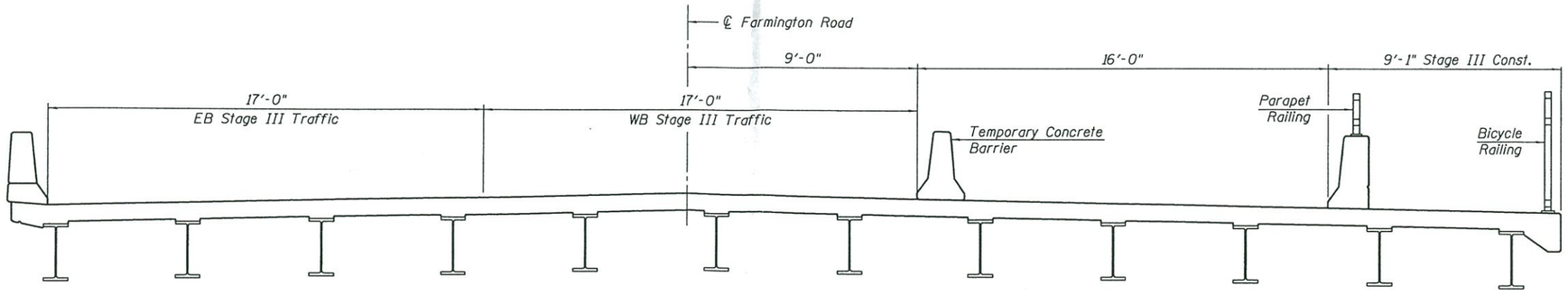

STAGE III CONSTRUCTION

design firm no. 184001036 whks engineers + planners + land surveyors	USER NAME = dheberling	DESIGNED - SDS	REVISED	STATE OF ILLINOIS DEPARTMENT OF TRANSPORTATION	STAGE CONSTRUCTION DETAILS STRUCTURE NO. 072-0245	F.A.U. RTE.	SECTION	COUNTY	TOTAL SHEETS / SHEET NO.
	FILE NAME = 0720245-68185.dgn	CHECKED - CWC	REVISED			6659	11BR-1	PEORIA	3 / 2
	PLOT SCALE = 0:2 ':' / in.	DRAWN - DLH	REVISED					CONTRACT NO. 68185	
	PLOT DATE = 9/10/2014	CHECKED - SDS/CWC	REVISED		SHEET NO. 2 OF 3 SHEETS		ILLINOIS FED. AID PROJECT		

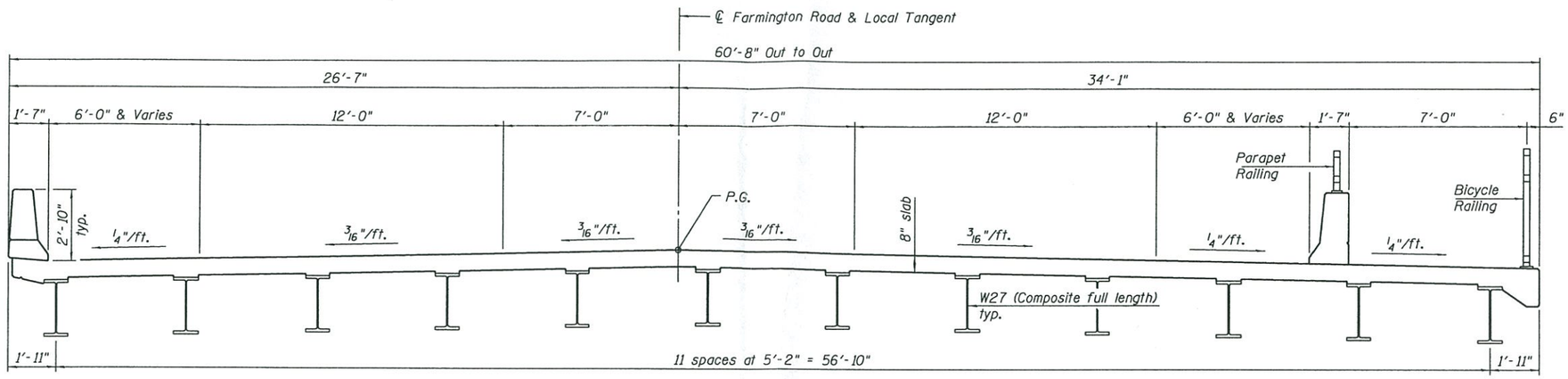

CROSS SECTION

(Looking West)

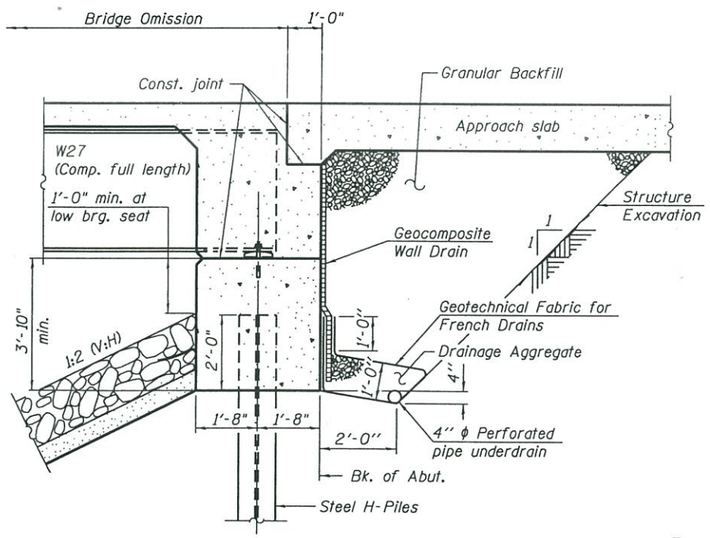

SECTION THRU ABUTMENT

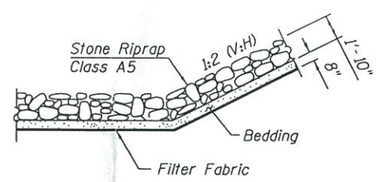

SECTION A-A

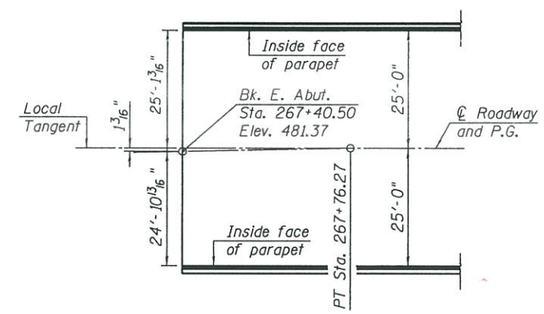

OFFSET SKETCH

APPROVED

SEP 15 2014

AS A BASIS FOR PREPARATION OF DETAILED PLANS

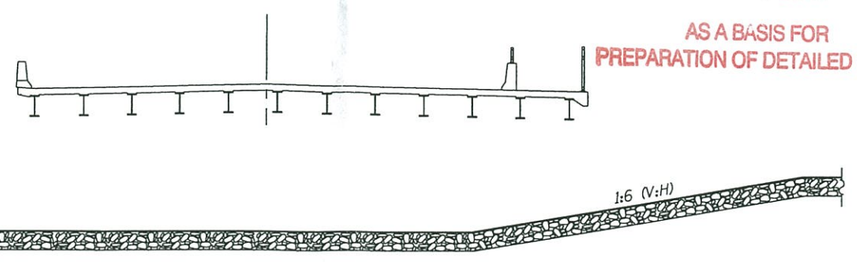

SECTION B-B

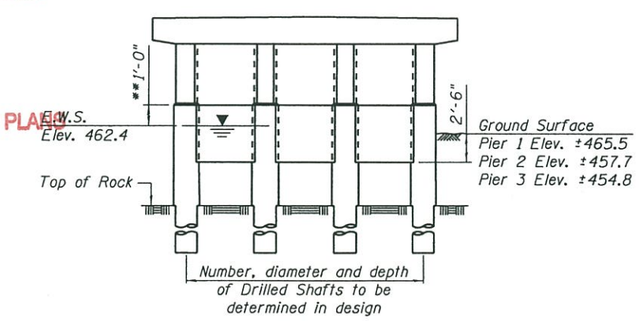

PIER SKETCH

** 1'-0" above E.W.S.E., typ. at Piers 2 and 3.
Use 1'-0" above Ground Surface at Pier 1.

design firm no. 184001036 whks engineers + planners + land surveyors	USER NAME = dheberling	DESIGNED - SDS	REVISED	STATE OF ILLINOIS DEPARTMENT OF TRANSPORTATION	DETAILS STRUCTURE NO. 072-0245	F.A.U. RTE.	SECTION	COUNTY	TOTAL SHEETS	SHEET NO.
	FILE NAME = 072D245-68185.dgn	CHECKED - CWC	REVISED			6659	11BR-1	PEORIA	3	3
	PLOT SCALE = 0:2 ':' / in.	DRAWN - DLH	REVISED					CONTRACT NO. 68185		
	PLOT DATE = 9/10/2014	CHECKED - SDS/CWC	REVISED		SHEET NO. 3 OF 3 SHEETS		ILLINOIS	FED. AID PROJECT		