Bench Mark: Chiseled "□" on north wingwall of east abutment of existing SN 075-0128 at Station 2479+56.2, 19.5' left offset, elevation 434.89.

Existing Structure: S.N. 075-0128, built in 1988 as FAP 745, Section 109 B-2, consists of a two span reinforced concrete slab on continuous steel rolled beams supported on pile bent abutments and pier, 131'-10" bk. to bk. abutments, 39'-2" o. to o. of deck. Existing structure to be replaced, except abutment piles will be reused.

Traffic to be maintained utilizing stage construction.

No salvage.

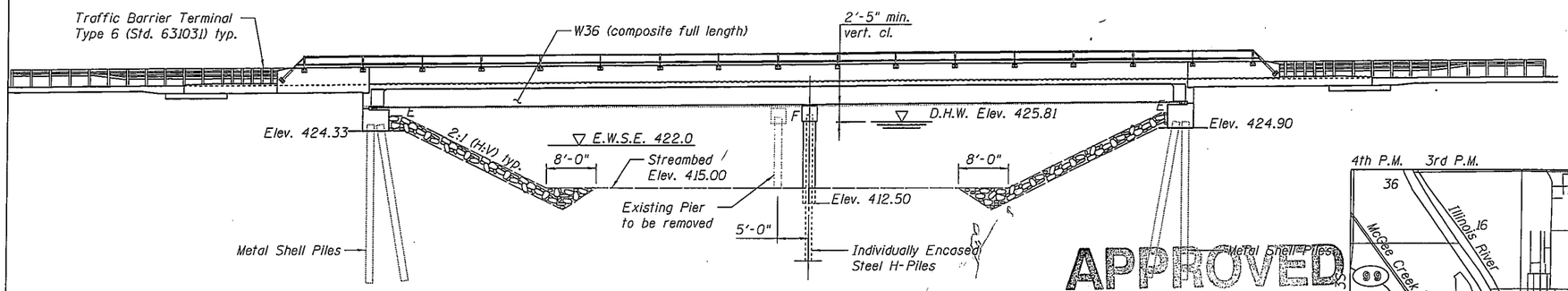

ELEVATION
(Looking North)

APPROVED
AUG 13 2013
AS A BASIS FOR
PREPARATION OF DETAILED PLANS

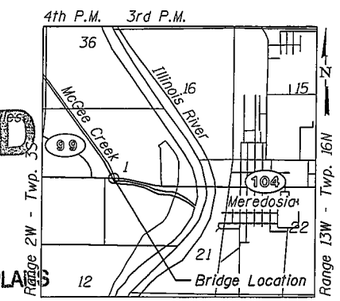

LOCATION SKETCH

HIGHWAY CLASSIFICATION

F.A.P. Rte. 745 - IL Rte. 104
Functional Class: Rural Minor Arterial
ADT: 2,760 (2012); 3,650 (2040)
ADTT: 800 (2012); 1,059 (2040)
DHV: 347
Design Speed: 60 m.p.h.
Posted Speed: 55 m.p.h.
Two-Way Traffic
Directional Distribution: 50:50

LOADING HL-93

Allow 50#/sq. ft. for future wearing surface.

DESIGN SPECIFICATIONS

2012 AASHTO LRFD Bridge Design Specifications, 6th Edition

DESIGN STRESSES

FIELD UNITS (New Construction)
f'c = 3,500 psi
fy = 60,000 psi (Reinforcement)
fy = 50,000 psi (M270 Grade 50W)

FIELD UNITS (Existing Construction)
f'c = 3,500 psi
fy = 60,000 psi (Reinforcement)

SEISMIC DATA

Seismic Performance Zone (SPZ) = 1
Design Spectral Acceleration at 1.0 sec. (S_{D1}) = 0.135
Design Spectral Acceleration at 0.2 sec. (S_{DS}) = 0.226
Soil Site Class = D

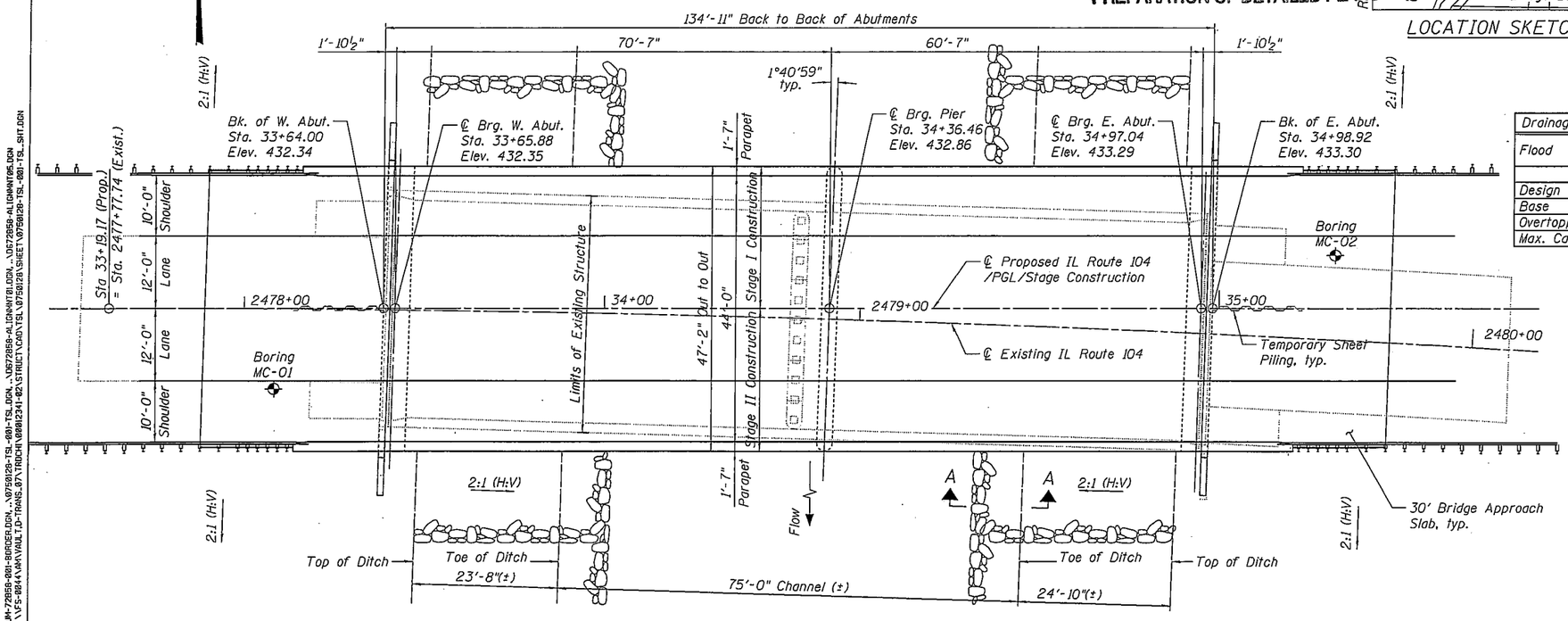

PLAN

WATERWAY INFORMATION

Drainage Area = 17.19 sq. mi. Low Grade Elev. 432.01 @ Sta. 33+35.00

Flood	Freq. Yr.	Q C.F.S.	Opening Sq. Ft. Exist.	Opening Sq. Ft. Prop.	Nat. H.W.E.	Head - Ft. Exist.	Head - Ft. Prop.	Headwater El. Exist.	Headwater El. Prop.
	10	2,140	660	660	425.25	0.01	0.01	425.26	425.26
Design	50	3,290	1,060	1,060	425.81	0.02	0.02	425.83	425.83
Base	100	3,820	1,085	1,085	426.01	0.01	0.01	426.02	426.02
Overtopping	N/A								
Max. Calc.	500	5,050	1,410	1,410	426.41	0.02	0.02	426.43	426.43

DESIGN SCOUR ELEVATION TABLE

Design Scour Elevation (ft.)			
	W. Abut.	Pier	E. Abut.
0.100	424.33	410.17	424.90
0.500	424.33	409.59	424.90

GENERAL PLAN AND ELEVATION
ILLINOIS ROUTE 104 OVER
MCGEE CREEK DRAINAGE DITCH
F.A.P. RTE. 745 - SEC. 123B-2
PIKE COUNTY
STATION 34+31.46
STRUCTURE NO. 075-0128

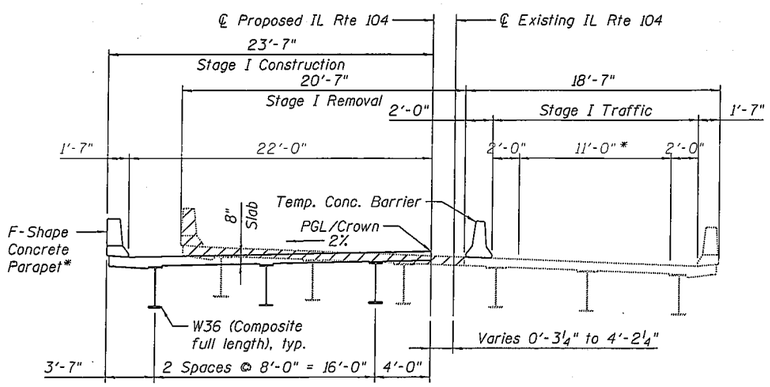

STAGE I CONSTRUCTION

*Two-directional traffic lane controlled with temporary signals.

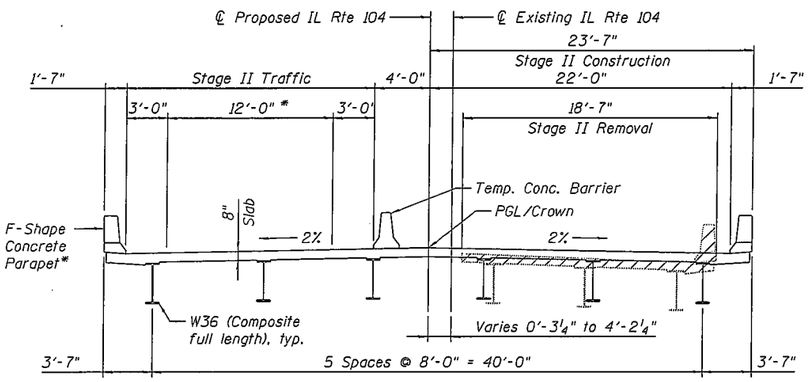

STAGE II CONSTRUCTION

*Two-directional traffic lane controlled with temporary signals.

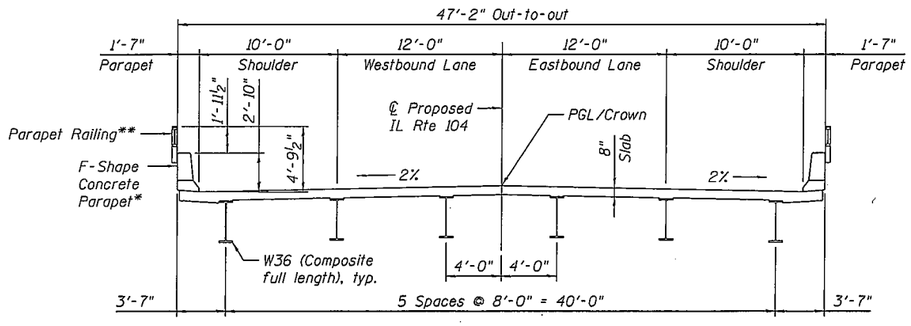

PROPOSED CROSS SECTION

* Outside face vertical.
** MnDOT Structural Tube Railing, T-2 (Fig. 5-397.158)

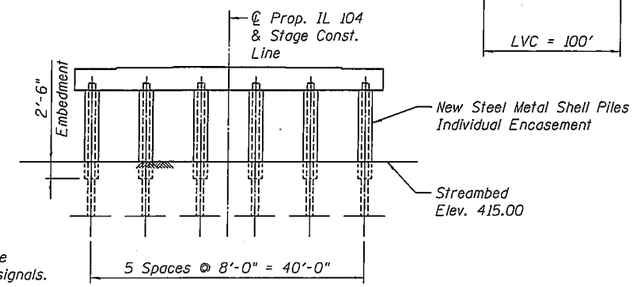

PIER SKETCH

APPROVED
AUG 13 2013
AS A BASIS FOR PREPARATION OF DETAIL PLANS

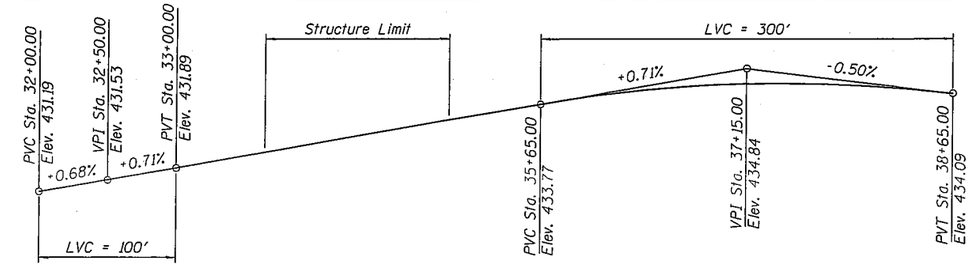

PROFILE GRADE
(along ℄ Prop. IL 104)

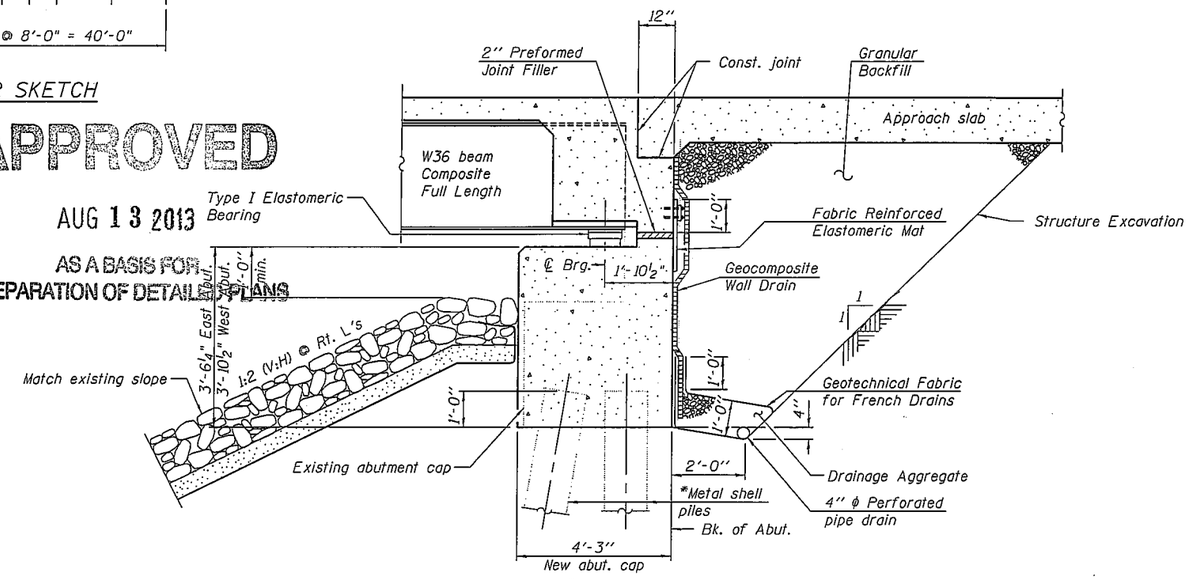

*Nine existing MS Piles to be incorporated in new construction
Two additional MS Piles required at each abutment

SECTION THRU SEMI-INTEGRAL ABUTMENT
(Horiz. dim. @ Rt. L's)

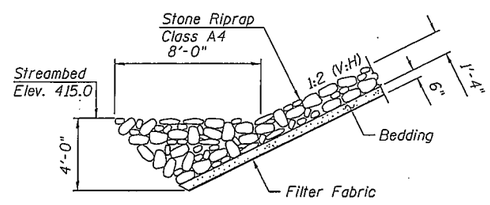

SECTION A-A

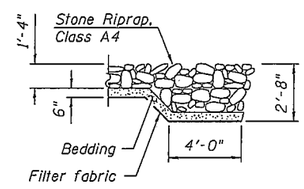

SECTION B-B

DETAILS
ILLINOIS ROUTE 104 OVER
MCGEE CREEK DRAINAGE DITCH
F.A.P. RTE. 745 - SEC. 123B-2
PIKE COUNTY
STATION 34+31.46
STRUCTURE NO. 075-0128

FILE NAME =	USER NAME =	DESIGNED - TCG	REVISED -	STATE OF ILLINOIS DEPARTMENT OF TRANSPORTATION	F.A.P. RTE.	SECTION	COUNTY	TOTAL SHEETS	SHEET NO.
exp U.S. Services Inc. Chicago, IL BUILDINGS-EARTH & ENVIRONMENT-ENERGY INDUSTRIAL-INFRASTRUCTURE-SUSTAINABILITY	DATE - 07/31/2013	CHECKED - JLR	REVISED -		745	123B-2	PIKE		
	PLOT SCALE =	DRAWN - TCG	REVISED -				CONTRACT NO.		
	PLOT DATE =	CHECKED - VCP	REVISED -	SHEET NO. 2 OF 2 SHEETS		ILLINOIS FED. AID PROJECT			

J:\ALLSTATE\24-72B5B-001-BRIDGE.DGN, ..\075012B-TSL-001-TSL.DGN, ..\075012B-TSL-001-TSL.DGN, ..\075012B-TSL-001-TSL.DGN
7-31-2013, 13:46:40 RITCHJL N:\FS-0014\ARCHIVAL FD-THRU5.07\TRDCHN\0001234I-02\STRUCT\CAD\TSL\075012B\SHEET\075012B-TSL-002-TSL_SHT.DGN