Benchmark: BM #2 - Cut "□" Top SE Wingwall S.N. 078-0001
Sta. 81+20.46, 31.99 RT, Elev. 517.95

Existing Structure: S.N. 078-0001 (Hennepin Bridge) carrying I-180 over the Illinois River was originally constructed in 1969. A bituminous concrete overlay was placed on the deck in 1970 and replaced in 2006. In 2016 and 2017, the overlayed deck was scarified and an overlay was installed. The structure consists of five 3-span units (15 spans) with a total length of 3,083'-2" back-to-back of abutments and a total width of 65'-0" out-to-out deck. The existing superstructure consists of a composite 8.5" CIP concrete deck on seven welded steel plate girders, which vary in web depth from 6'-10" to 16'-0". The existing substructure consists of reinforced concrete open stub abutments on steel H piles and reinforced concrete single hammerhead piers on steel H piles. The existing concrete deck is to be removed and replaced. Traffic will be maintained using stage construction.

No salvage

SCOPE OF WORK

1. Remove and replace the existing deck and approach slabs using stage construction. Install protective shield in Span 5 during deck removal. The new deck will have 34" tall F-shape parapets and median barrier, and the new expansion joints will be Preformed Joint Strip Seal and Modular Expansion Joints. Deck drainage will be provided using DS-11 Drainage Scuppers and 6" diameter floor drains; the runoff will be freefall discharged to the ground below. Relocate and provide temporary supports for existing conduits and junction boxes for navigation lights during construction. Secure navigation lights during deck replacement. Remove and re-install supporting brackets for locking rods and safety chains.
2. Install additional stud shear connectors in positive moment areas of the existing girders as required.
3. Repair girder ends below expansion joints. Clean and paint the existing structural steel. The existing structural steel coating contains lead; Provide containment and disposal of lead-based paint.
4. Repair substructure concrete using Structural Concrete Repair. Epoxy inject any crack in the abutment wider than ⅛".
5. Remove existing approach bent cap and portions of the existing wingwalls to accommodate the new approach slabs.

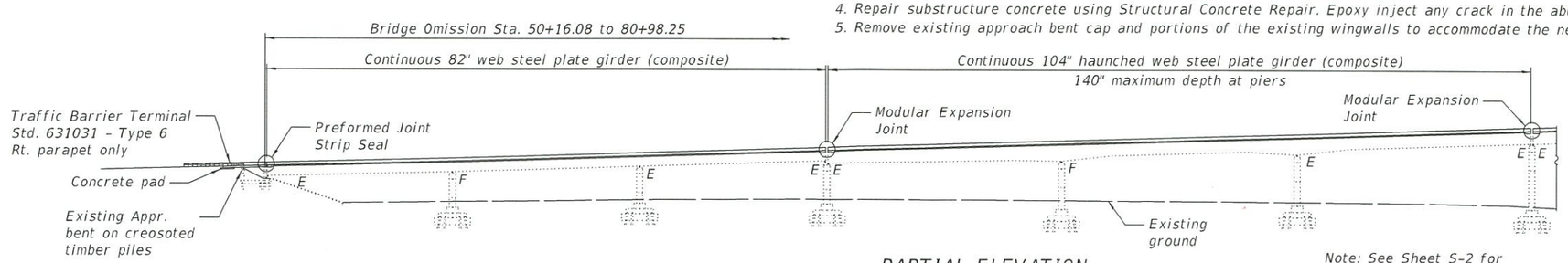

PARTIAL ELEVATION

Note: See Sheet S-2 for Waterway Information

APPROVED
APR 04 2018
AS A BASIS FOR PREPARATION OF DETAILED PLANS

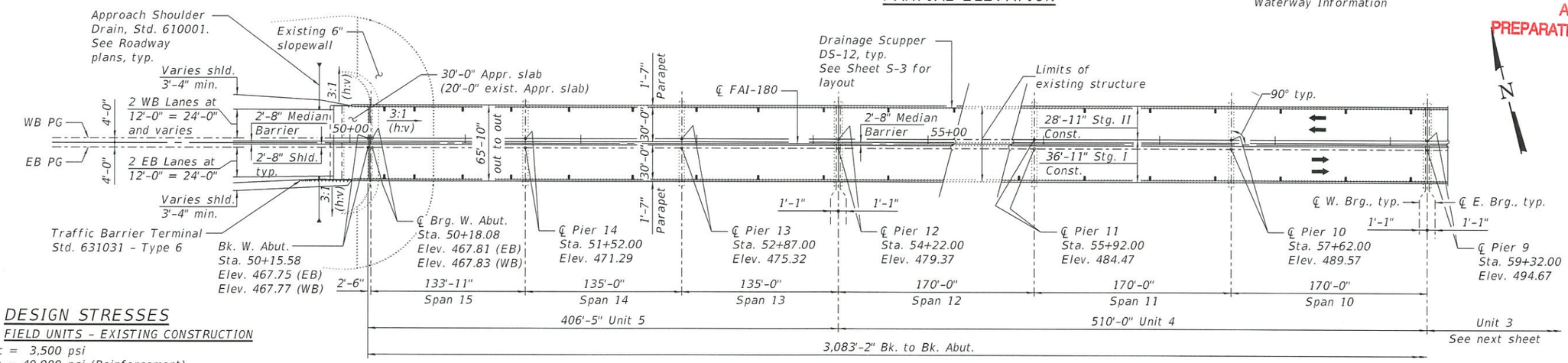

PARTIAL PLAN

DESIGN STRESSES

FIELD UNITS - EXISTING CONSTRUCTION

f'c = 3,500 psi
fy = 40,000 psi (Reinforcement)
fy = 36,000 psi (A36)
fy = 50,000 psi (A441, Plates ¾" thick and under)
fy = 46,000 psi (A441, Plates over ¾" to 1½" thick inclusive)
fy = 42,000 psi (A441, Plates over 1½" to 4" thick inclusive)

FIELD UNITS - NEW CONSTRUCTION

f'c = 4,000 psi (Concrete Superstructure)
f'c = 3,500 psi (Approach Footing)
fy = 60,000 psi (Reinforcement)
fy = 50,000 psi (M270 Grade 50)

SEISMIC DATA

Seismic Performance Category (SPC) = A
Acceleration Coefficient (A) = 0.04g
Site Coefficient (S) = 2.0

LOADING HS20-44 & ALT.

Allow 25 #/sq. ft. for future wearing surface.

DESIGN SPECIFICATIONS

2002 AASHTO Standard Specifications - 17th Edition

HIGHWAY CLASSIFICATION

F.A.I. Rte. 180
Functional Class: Interstate
ADT: 2,500 (2016); 3,148 (2040)
ADTT: 505 (2016); 636 (2040)
DHV: 346 (2040)
Design Speed: 70 m.p.h.
Posted Speed: 70 m.p.h.
Two-Way Traffic
Directional Distribution: 50/50

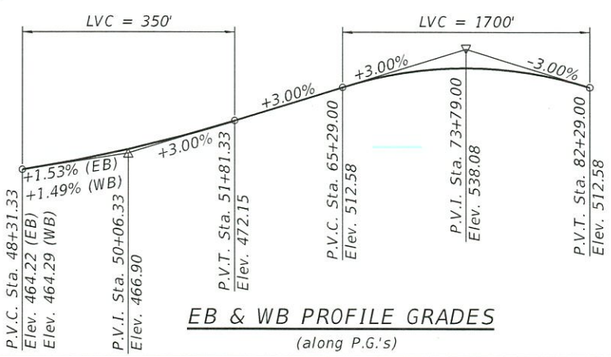

EB & WB PROFILE GRADES

(along P.G.'s)

DESIGN SCOUR ELEVATION TABLE

Event / Limit State	Design Scour Elevations (ft.)								
	E. Abut.	Pier 1	Pier 2	Pier 3	Pier 4	Pier 5	Pier 6	Pier 7	Item 113
Q100	500.42	433.43	419.78	450.59	414.01	421.25	443.32	441.62	8
Q200	500.42	433.36	419.76	450.59	413.98	421.20	443.32	441.62	
Design	500.42	415.13	414.86	419.12	412.94	413.00	421.81	427.08	
Check	500.42	415.13	414.86	419.12	412.94	413.00	421.81	427.08	
	Pier 8	Pier 9	Pier 10	Pier 11	Pier 12	Pier 13	Pier 14	W. Abut.	
Q100	444.45	441.85	441.85	444.88	444.87	444.47	445.37	454.09	
Q200	444.45	441.85	441.85	444.88	444.87	444.47	445.37	454.09	
Design	429.98	428.61	431.05	428.18	431.88	432.96	429.88	454.09	
Check	429.98	428.61	431.05	428.18	431.88	432.96	429.88	454.09	

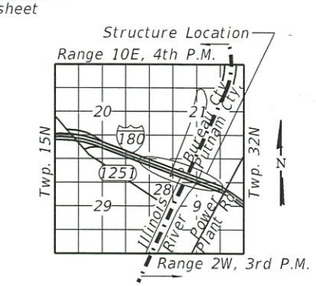

LOCATION SKETCH

GENERAL PLAN & ELEVATION - SPANS 15-10
I-180 OVER ILLINOIS RIVER
PUBLIC WATER
F.A.I. RTE. 180 - SEC. (06-3, 078-1)BR-1
BUREAU AND PUTNAM COUNTIES
STATION 69+29.25
STRUCTURE NO. 078-0001

MODEL: $MODELNAMES
FILE NAME: I:\CHI\PRJ\00000260\8\WorkOrder16 - I180\03_CADD\01_Sheets\Structural\66F08-I180_sht_TS&L01.dgn

LOCHNER
H. W. LOCHNER, INC.
225 WEST WASHINGTON STREET
12 TH FLOOR
CHICAGO, ILLINOIS 60606

USER NAME = AKHAN	DESIGNED - AMK	REVISED -	
	CHECKED - RH	REVISED -	
PLOT SCALE = 1:100	DRAWN - AAK	REVISED -	
PLOT DATE = 3/22/2018	CHECKED - RH	REVISED -	

STATE OF ILLINOIS
DEPARTMENT OF TRANSPORTATION

SHEET S-1 OF S-5 SHEETS

F.A.I. RTE.	SECTION	COUNTY	TOTAL SHEETS	SHEET NO.
180	(06-3, 078-1)BR-1	BUREAU/PUTNAM		

CONTRACT NO. 66F08
ILLINOIS | FED. AID PROJECT

3/22/2018 9:47:28 AM

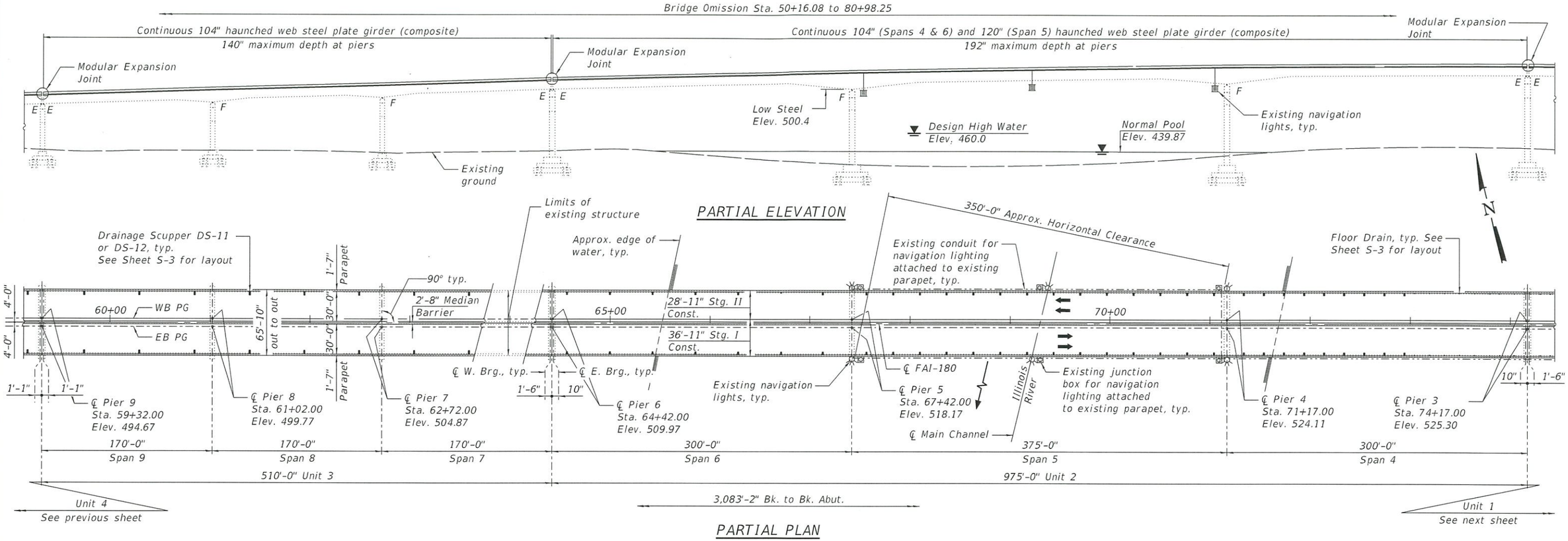

WATERWAY INFORMATION

Drainage Area = 12,756 sq mi Low Grade Elev. 460.84 @ Sta. 807+00

Flood	Freq. Yr.	Q C.F.S.	Opening Ft² Exist.	Opening Ft² Prop.	Nat. H.W.E.	Head - Ft. Exist.	Head - Ft. Prop.	Headwater El. Exist.	Headwater El. Prop.
	10	112,000	47,700	47,700	456.2	0.1	0.1	456.3	456.3
Design	50	149,000	58,600	58,600	460.0	0.1	0.1	460.1	460.1
Overtopping	70	156,000	61,500	61,500	461.0	0.2	0.2	461.2	461.2
Base	100	165,000	70,100	70,100	461.6	0.2	0.2	461.7	461.7
Scour Check	200	180,000	66,900	66,900	462.9	0.2	0.2	463.1	463.1
Max. Calc.	500	195,000	70,800	70,800	464.3	0.1	0.1	464.4	464.4

APPROVED
APR 04 2018
AS A BASIS FOR PREPARATION OF DETAILED PLANS

MODEL: $MODELNAME$
FILE NAME: I:\CH\PRJ\0000002608\WorkOrder16 - 1180\03_CADD\01_Sheets\Structural\66F08-1180_sht_TS6L02.dgn
3/21/2018 8:56:21 PM

LOCHNER
H. W. LOCHNER, INC.
225 WEST WASHINGTON STREET
12 TH FLOOR
CHICAGO, ILLINOIS 60606

USER NAME = akhan	DESIGNED - AMK	REVISED -	
	CHECKED - RH	REVISED -	
PLOT SCALE = 1:100	DRAWN - AAK	REVISED -	
PLOT DATE = 3/21/2018	CHECKED - RH	REVISED -	

STATE OF ILLINOIS
DEPARTMENT OF TRANSPORTATION

GENERAL PLAN & ELEVATION, SPANS 9 - 4
STRUCTURE NO. 078-0001

SHEET S-2 OF S-5 SHEETS

F.A.I. RTE.	SECTION	COUNTY	TOTAL SHEETS	SHEET NO.
180	(06-3, 078-1)BR-1	BUREAU/PUTNAM		
		CONTRACT NO. 66F08		
	ILLINOIS	FED. AID PROJECT		

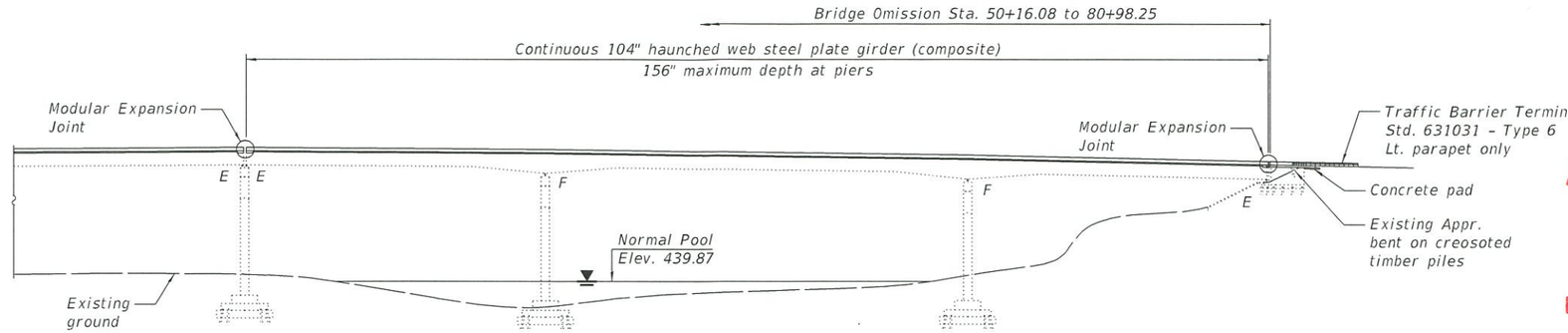

PARTIAL ELEVATION

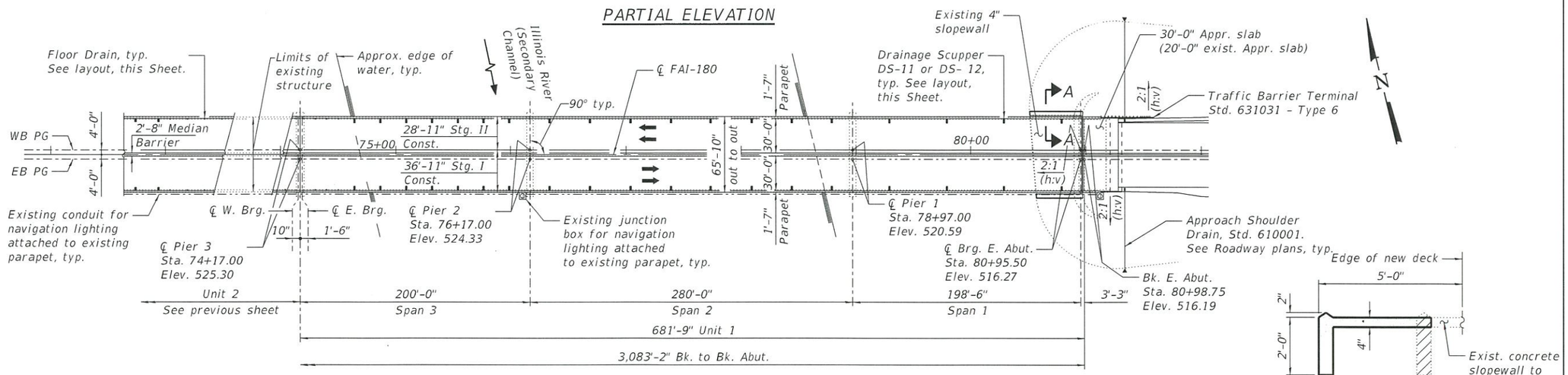

PARTIAL PLAN

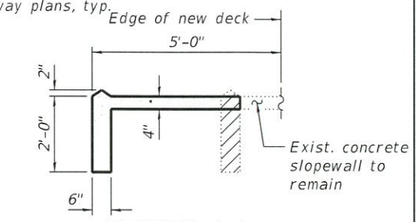

SECTION A-A

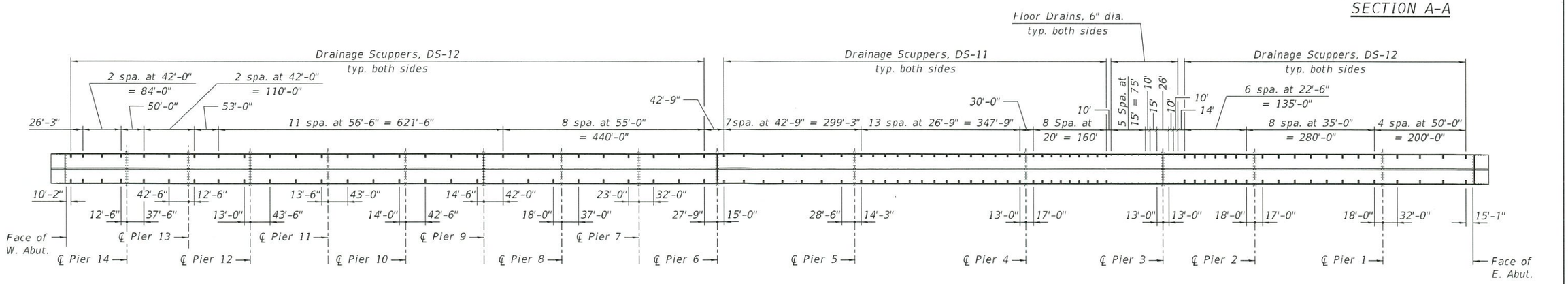

SCUPPER AND FLOOR DRAIN LAYOUT

APPROVED
APR 04 2018
AS A BASIS FOR PREPARATION OF DETAILED PLANS

MODEL: SMODELNAMES
FILE NAME: I:\CHIPRI\0000002608\WorkOrder16 - 1180\03_CADD\01_Sheets\Structural\66F08-1180_sht_TS&L03.dgn

LOCHNER H. W. LOCHNER, INC. 225 WEST WASHINGTON STREET 12 TH FLOOR CHICAGO, ILLINOIS 60606	USER NAME = AKHAN	DESIGNED - AMK	REVISED -	STATE OF ILLINOIS DEPARTMENT OF TRANSPORTATION	GENERAL PLAN & ELEVATION, SPANS 3 - 1 STRUCTURE NO. 078-0001
		CHECKED - RH	REVISED -		
	PLOT SCALE = 1:100	DRAWN - AAK	REVISED -		
	PLOT DATE = 3/22/2018	CHECKED - RH	REVISED -		SHEET S-3 OF S-5 SHEETS

F.A.I. RTE.	SECTION	COUNTY	TOTAL SHEETS	SHEET NO.
180	(06-3, 078-1)BR-1	BUREAU/PUTNAM		
		CONTRACT NO. 66F08		
		ILLINOIS	FED. AID PROJECT	

3/22/2018 9:49:03 AM

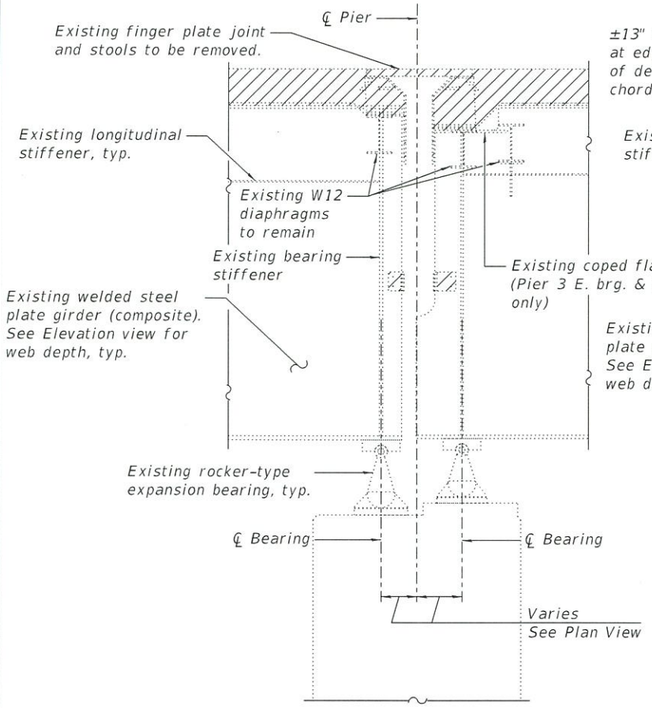

EXISTING SECTION THROUGH PIERS 3, 6, 9, AND 12

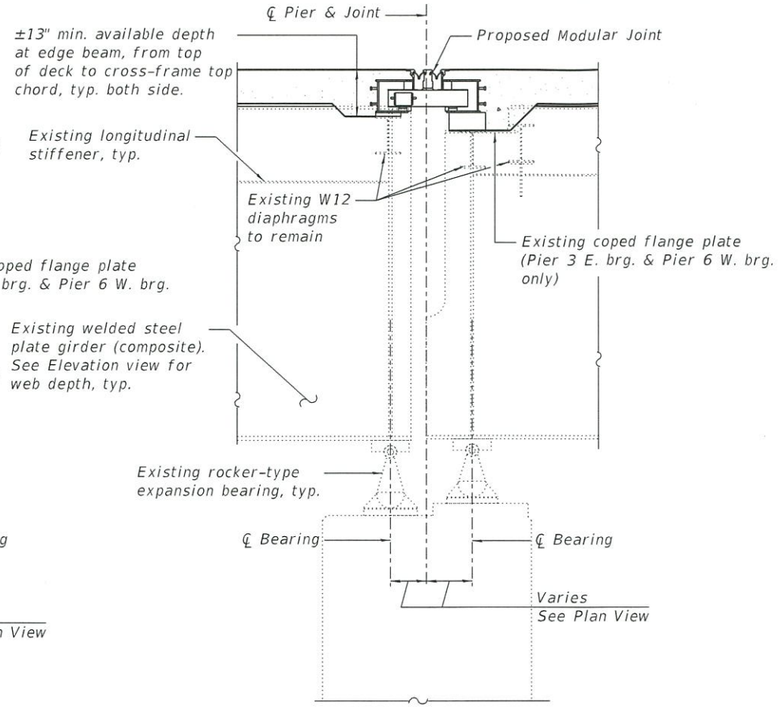

PROPOSED SECTION THROUGH PIERS 3, 6, 9, AND 12

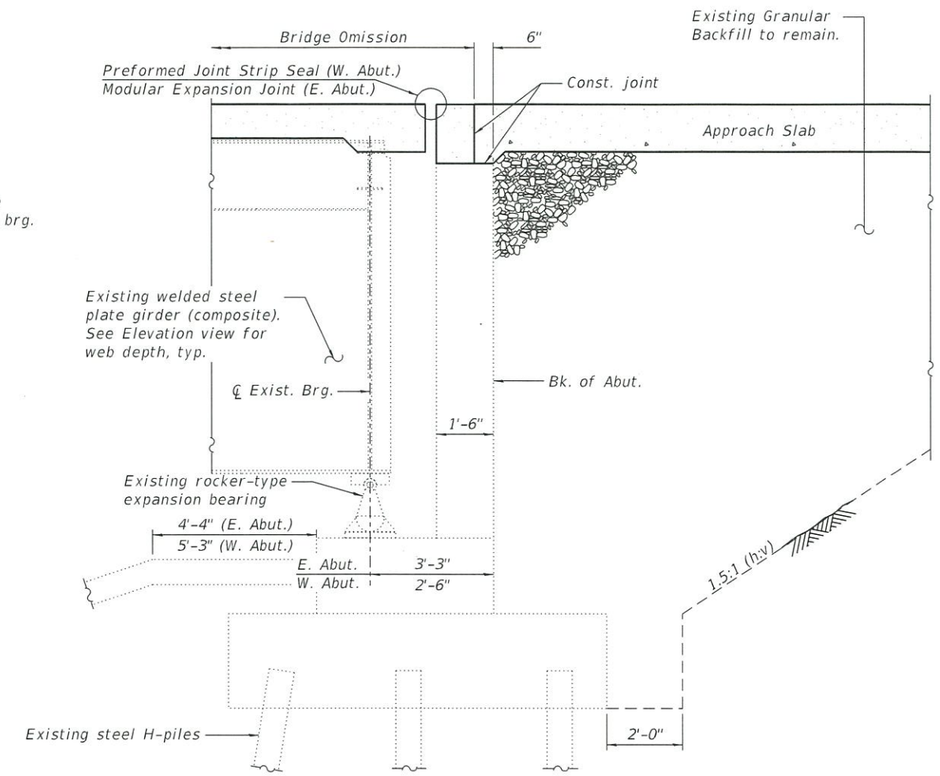

SECTION THROUGH EXISTING ABUTMENT

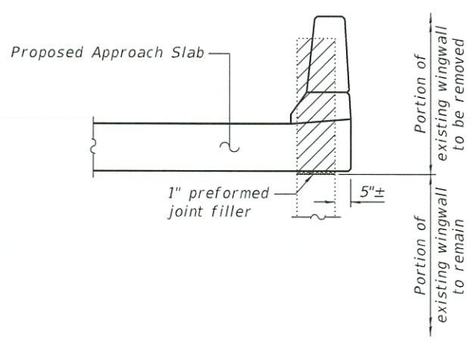

SECTION THROUGH EXISTING WINGWALL

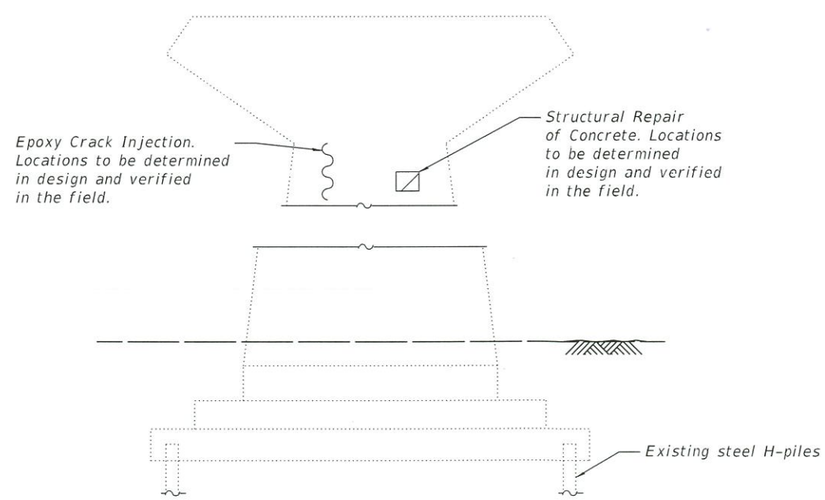

EXISTING PIER SKETCH

APPROVED

APR 04 2018

AS A BASIS FOR PREPARATION OF DETAILED PLANS

MODEL: SMODELNAMES
FILE NAME: I:\CHIPRJ\100002608\WorkOrder16 - 1180\03_CADD\01_Sheets\Structural\66F08-I180_sht_TS6L04.dgn

LOCHNER H. W. LOCHNER, INC. 225 WEST WASHINGTON STREET 12 TH FLOOR CHICAGO, ILLINOIS 60606	USER NAME = AKHAN	DESIGNED - AMK	REVISED -	STATE OF ILLINOIS DEPARTMENT OF TRANSPORTATION	SECTIONS AND DETAILS STRUCTURE NO. 078-0001	F.A.I. RTE.	SECTION	COUNTY	TOTAL SHEETS	SHEET NO.
		CHECKED - RH	REVISED -			180	(06-3, 078-1)BR-1	BUREAU/PUTNAM		
	PLOT SCALE = 1:4	DRAWN - AAK	REVISED -					CONTRACT NO. 66F08		
	PLOT DATE = 3/22/2018	CHECKED - RH	REVISED -		SHEET S-4 OF S-5 SHEETS		ILLINOIS	FED. AID PROJECT		

3/22/2018 9:49:58 AM

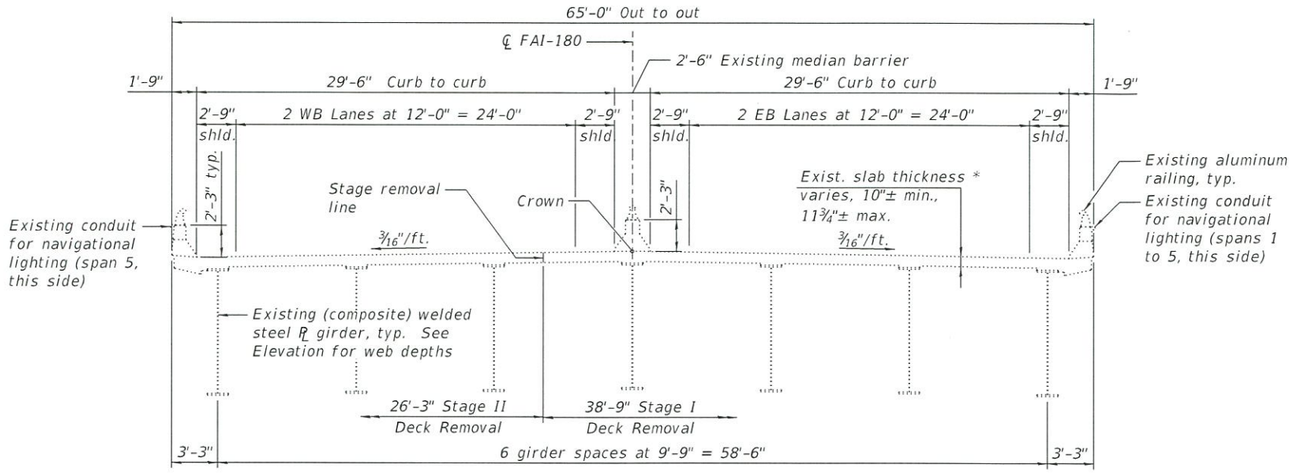

* Includes 8½" structural slab and variable depth bituminous overlay

EXISTING CROSS-SECTION
(Looking East)

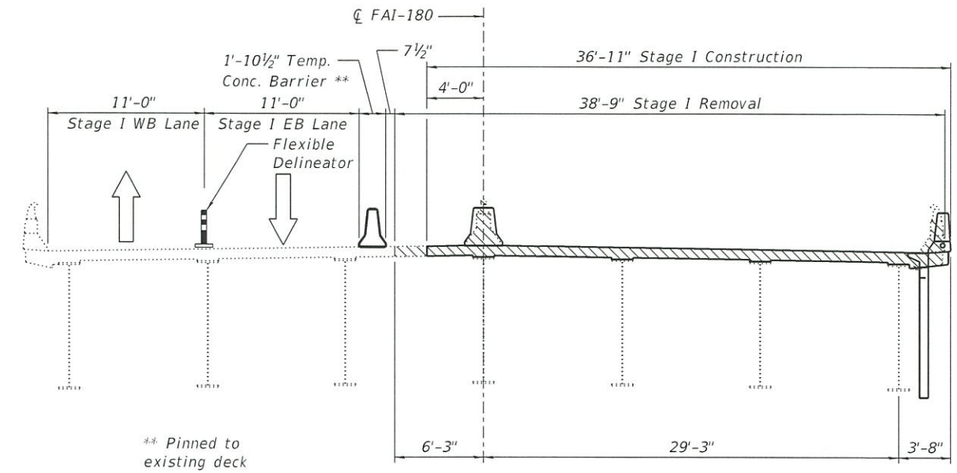

STAGE I CROSS-SECTION
(Looking East)

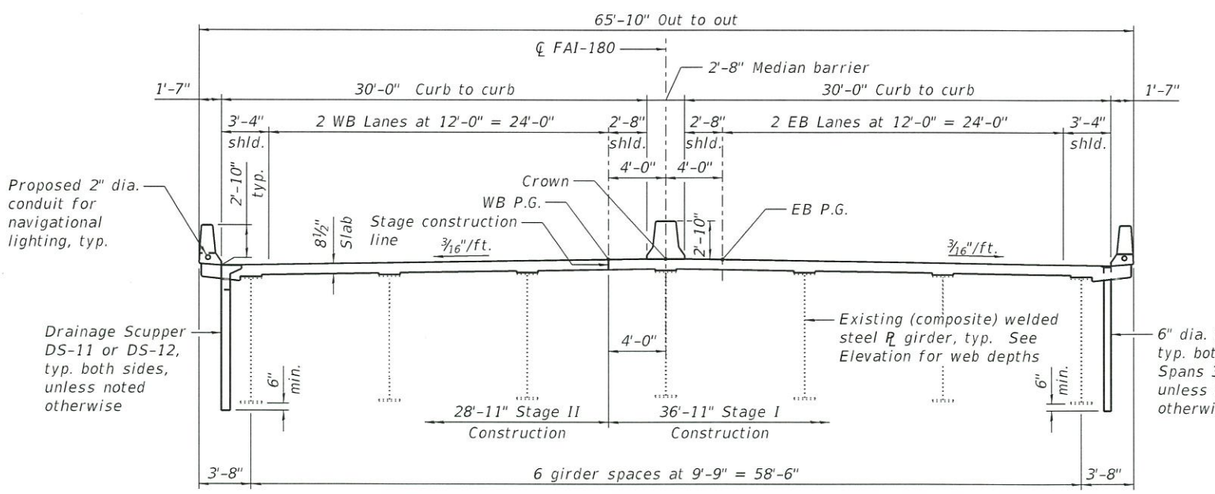

FINAL CROSS-SECTION
(Looking East)

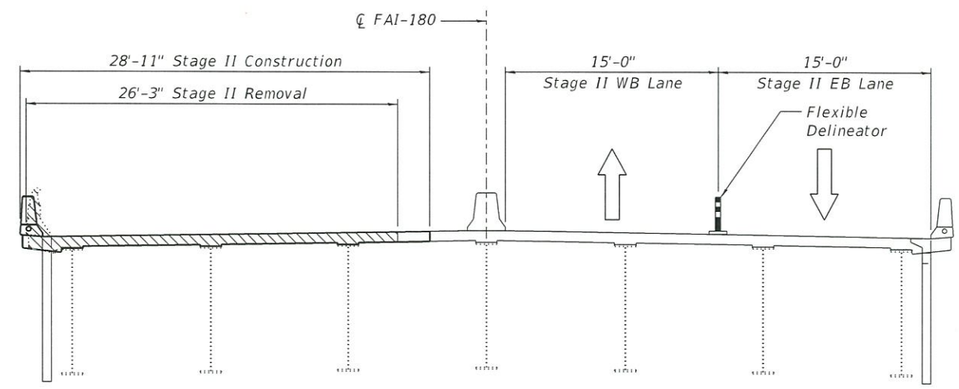

STAGE II CROSS-SECTION
(Looking East)

APPROVED

APR 04 2018

AS A BASIS FOR PREPARATION OF DETAILED PLANS

MODEL: $MODELNAMES
FILE NAME: I:\CHI\PRJ\00002608\WorkOrder16 - 1180\03_CADD\01_Sheets\Structural\66F08-I180_sht_TS6L05.dgn

3/21/2018 8:58:41 PM

LOCHNER H. W. LOCHNER, INC. 225 WEST WASHINGTON STREET 12 TH FLOOR CHICAGO, ILLINOIS 60606	USER NAME = akhan PLOT SCALE = 1:10.6667 PLOT DATE = 3/21/2018	DESIGNED - AMK CHECKED - RH DRAWN - AMK CHECKED - RH	REVISED - REVISED - REVISED - REVISED -	STATE OF ILLINOIS DEPARTMENT OF TRANSPORTATION

STAGING CROSS-SECTIONS
STRUCTURE NO. 078-0001

SHEET S-5 OF S-5 SHEETS

F.A.I. RTE.	SECTION	COUNTY	TOTAL SHEETS	SHEET NO.
180	(06-3, 078-1)BR-1	BUREAU/PUTNAM		
		CONTRACT NO. 66F08		
	ILLINOIS	FED. AID PROJECT		