BENCHMARK: Railroad spike on west side of first power pole - north of bridge and west of IL Route 89. Elevation: 651.05

EXISTING STRUCTURE: S.N. 078-0024 to be removed. Built in 1928 as SBI 89, Section 122B, at Sta. 420+57.
Single span, Reinforced Concrete Slab. 26'-0" back to back of abutments, 42'-0" deck width. Reinforced Concrete Closed Abutments on Timber Piles.
Bridge to be removed.
No salvage.
Traffic to be maintained utilizing Stage Construction.

Notes:
Excavation behind the existing abutments shall be completed to balance front and back soil pressure before removing the existing superstructure. Existing abutments shall be removed to 2 ft. below the proposed culvert barrel and backfilled with Rockfill (Special). Backfill for the cuvert excavation shall consist of granular culvert backfill.

WATERWAY INFORMATION

Existing Low Grade Elev. 653.18 @ Sta. 420+50
Drainage Area = 3.76 sq mi Proposed Low Grade Elev. 653.37 @ Sta. 420+50

Flood	Freq. Yr.	Q C.F.S.	Opening Sq. Ft. Exist.	Opening Sq. Ft. Prop.	Nat. H.W.E. Exist.	Nat. H.W.E. Prop.	Head - Ft. Exist.	Head - Ft. Prop.	Headwater El. Exist.	Headwater El. Prop.
	10	705	174	192	647.9	648.0	0.4	0.0	648.3	648.0
Design	50	1160	198	216	648.9	649.0	1.1	0.2	650.0	649.2
Base	100	1370	207	226	649.3	649.4	1.4	0.4	650.7	649.8
Max. Calc.	500	1880	229	240	650.2	650.3	2.3	1.0	652.5	651.3

10 Year Velocity Through Existing Bridge = 4.1 ft/s
10 Year Velocity Through Proposed Bridge = 3.7 ft/s

DESIGN SCOUR ELEVATION TABLE

Design Scour Elevation (ft.)	Downstream	Upstream
	636.60	636.70

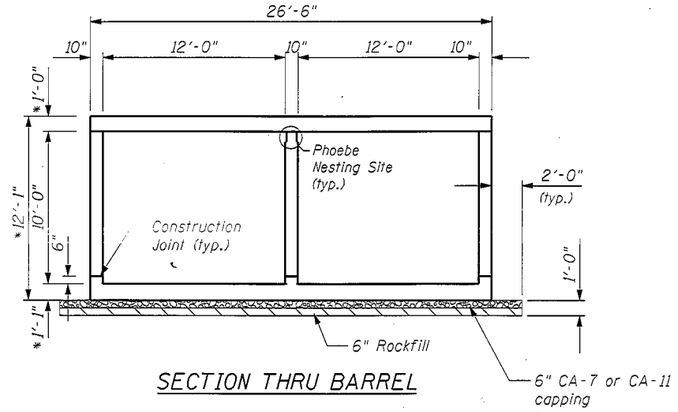

SECTION THRU BARREL

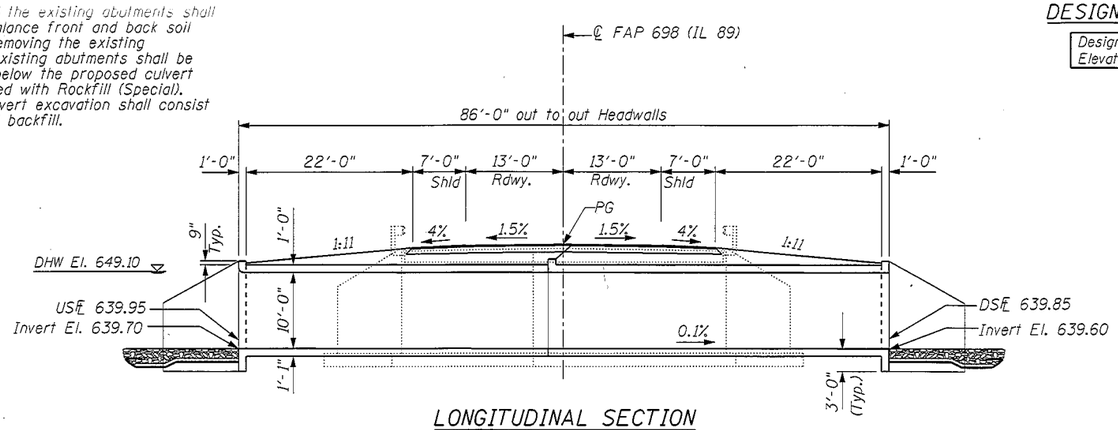

LONGITUDINAL SECTION
(Looking South)

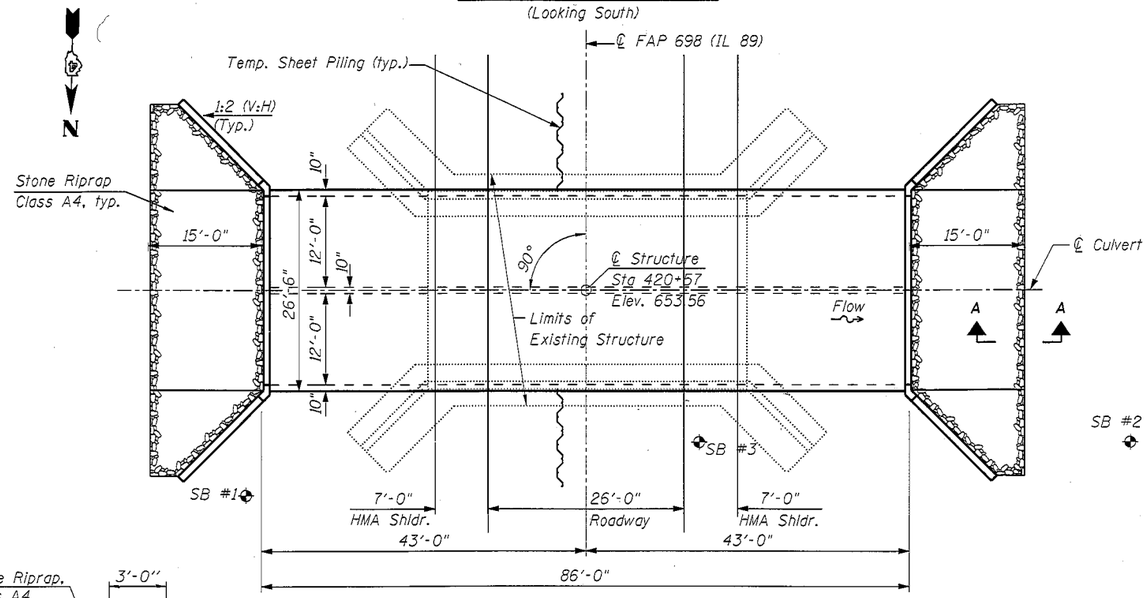

PLAN

HIGHWAY CLASSIFICATION

FAP Rte. 698 - IL Rte. 89
Functional Class: Minor Arterial (Non Urban)
ADT: 2300 (2009); 2500 (2022)
ADTT: 8% (2009);
DHV: 250
Design Speed: 55 m.p.h.
Posted Speed: 55 m.p.h.
Two way Traffic
Directional Distribution: 50 : 50

DESIGN SPECIFICATIONS

2012 AASHTO LRFD Bridge Design Specifications, LRED 6th edition

LOADING HL-93

Allow 50#/sq. ft. for future wearing surface.

DESIGN STRESSES

FIELD UNITS

f'c = 3,500 psi
fy = 60,000 psi (Reinforcement)

APPROVED
JAN 29 2013
AS A BASIS FOR PREPARATION OF DETAILED PLANS

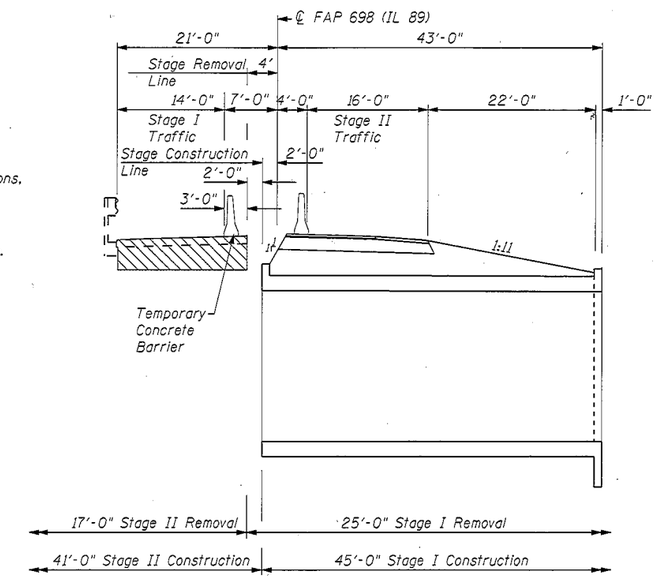

STAGE CONSTRUCTION SKETCH
(looking south)

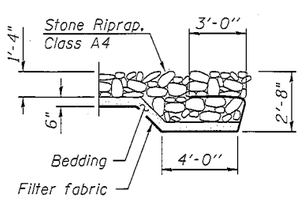

SECTION A-A

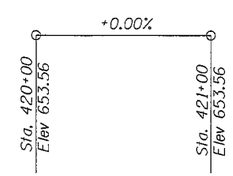

PROFILE GRADE
(along ℄ roadway)

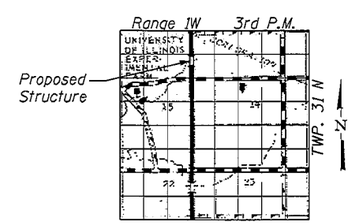

LOCATION SKETCH

GENERAL PLAN AND ELEVATION
ILLINOIS ROUTE 89 OVER CLEAR CREEK TRIBUTARY
F.A.P. RTE. 698 - SEC. 122-W, RS
PUTNAM COUNTY
STATION 420+57.00
STRUCTURE NO. 078-2012

FILE NAME = $FILEABBREV$	USER NAME = $USER$	DESIGNED - MJS	REVISED -	STATE OF ILLINOIS DEPARTMENT OF TRANSPORTATION		F.A.P. RTE.	SECTION	COUNTY	TOTAL SHEETS / SHEET NO.
		CHECKED -	REVISED -			698	122-W, RS	PUTNAM	
	PLOT SCALE = $SCALE$	DRAWN - RMH	REVISED -					CONTRACT NO. 68893	
THE UPCHURCH GROUP, INC.	PLOT DATE = $DATE$ $TIME$	CHECKED -	REVISED -		SHEET NO.SL-GR$ETSL-TOSHEETS		ILLINOIS	FED. AID PROJECT	